3-Key Capacitive Touch Controller

FEATURES

- 3 Capacitive key with sensitivity configurable
- RF Noise Filter
- Tap Gesture detection (Single/Double/Triple click)
- Automatic Calibration for Environmental Change
- Intrinsic Capacitance Compensation
- Compatible I^2C Interface, V_{IO}: 1.8V ~ 3.3V
- I2C Address: 0x2C/0x2D
- Single Power Supply, Voltage Range: 3.0V ~ 4.5V
- CSP1.59mm×1.75mmx0.57mm-13L Package

GENERAL DESCRIPTION

AW9203 integrates 3 capacitive sensor. The capacitive sensor takes advantage of advanced Sigma-delta capacitance digital conversion technology to achieve high sensitivity and anti-noise capacitance detection. With internal DSP algorithm, the touch and gesture event can be detected and reported in status register and external interrupt pin.

Compatible I^2C interface of 400kHz fast mode is provided, the package is CSP1.59mm×1.75mm-13L. It requires only 3.0V-4.5V single power supply.

APPLICATIONS

Mobile Phones, MID

Portable Media Player

Home Appliances

TYPICAL APPLICATION CIRCUIT

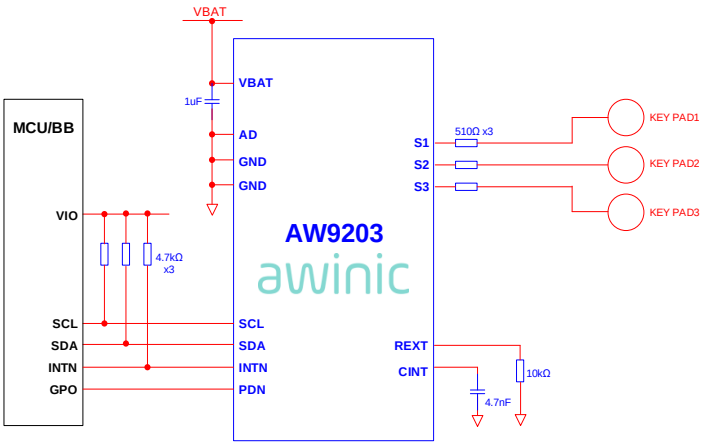

Figure 1 AW9203 Typical Application Circuit

All trademarks are the property of their respective owners.

 Copyright © 2016 SHANGHAI AWINIC TECHNOLOGY CO., LTD

CONTENT

1 PIN CONFIGURATION AND TOP MARK 4

2 PIN DEFINITION 4

3 FUNCTIONAL BLOCK DIAGRAM 5

4 TYPICAL APPLICATION CIRCUITS 5

5 ORDERING INFORMATION 6

6 ABSOLUTE MAXIMUM RATINGS(NOTE 3) 6

7 ELECTRICAL CHARACTERISTICS 7

8 I²C INTERFACE TIMING 8

9 FUNCTIONAL DESCRIPTION 9

9.1 WORK MODE 9
9.2 RESET 9
9.2.1 HARDWARE RESET 9
9.2.2 SOFTWARE RESET 9
9.3 I²C INTERFACE 9
9.3.1 DEVICE ADDRESS 9
9.3.2 DATA VALIDATION 10
9.3.3 ACK(ACKNOWLEDGEMENT) 10
9.3.4 I²C START/STOP 10
9.3.5 WRITE CYCLE 11
9.3.6 READ CYCLE 11
9.4 OSCILLATOR 12
9.5 CAPACITIVE TOUCH DETECTION 12
9.5.1 TOUCH STATUS AND INTERRUPT 13
9.5.2 GESTURE STATUS 13

10 REGISTER DESCRIPTION 15

10.1 REGISTER CONFIGURATION 15
10.2 GLOBAL REGISTER DESCRIPTION 17
10.2.1 IDRST, CHIP ID AND SOFTWARE RESET 17
10.2.2 GCR, GLOBAL CONTROL REGISTER 17
10.3 CAPACITIVE TOUCH DETECTION REGISTERS 17
10.3.1 SLPR, SENSOR SLEEP CONTROL REGISTER 17
10.3.2 KINTER, KEY INTERRUPT ENABLE REGISTER 17
10.3.3 AKSCR, ADJACENT KEY SUPPRESSION CONFIGURATION REGISTER 17
10.3.4 SLSR, SLIDE CONFIGURATION REGISTER 18
10.3.5 JDGTHRN, KEY STATUS JUDGE CONFIGURATION REGISTER 18
10.3.6 NOISETHR, NOISE THRESHOLD REGISTER 18
10.3.7 SCFG1, SCAN CONFIGURATION REGISTER 18
10.3.8 SCFG2, SCAN CONFIGURATION REGISTER 18

 Copyright © 2016 SHANGHAI AWINIC TECHNOLOGY CO., LTD

10.3.9 OFSR1, KEY CAPACITANCE OFFSET REGISTER 19
10.3.10 OFSR2, KEY CAPACITANCE OFFSET REGISTER 19
10.3.11 DOFCR1-2, ADC DIGITAL OFFSET REGISTER 19
10.3.12 IDLECR, IDLE STATUS CONFIGURATION REGISTER 19
10.3.13 MTOTR, MAXIMUM TOUCH ON TIME REGISTER 20
10.3.14 DISMAX, MAXIMUM MARGIN OF VALID DATA 20
10.3.15 SETCNT, TOUCH DECISION DE-BOUNCE COUNT 20
10.3.16 BLCTH, BASELINE TRACE CONFIGURATION REGISTER 20
10.3.17 BLDTH, BASELINE RESET THRESHOLD 20
10.3.18 MCR, MONITOR CONTROL REGISTER 21
10.3.19 GDCFGR, GESTURE DETECTION CONFIGURATION REGISTER 21
10.3.20 GDTR, GESTURE DETECTION TIME REGISTER 21
10.3.21 TDTR, TAP DETECTION REGISTER 21
10.3.22 GSTR1~2, GESTURE CONFIGURATION REGISTER 21
10.3.23 TAPR, TAP GESTURE CONFIGURATION REGISTER 22
10.3.24 GIER, GESTURE INTERRUPT ENABLE REGISTER 22
10.3.25 GISR, GESTURE INTERRUPT STATUS REGISTER 22
10.3.26 GTIMR, GESTURE DURATION REGISTER 23
10.3.27 RAWST, RAW KEY STATUS REGISTER 23
10.3.28 KEYST, AKS KEY STATUS REGISTER 23
10.3.29 KISR, KEY INTERRUPT STATUS REGISTER 23
10.3.30 MOVCNTR, SLIDER MOVE COUNTER REGISTER 23
10.3.31 KDATAN, KEY DATA REGISTER 23
10.3.32 DUM0, RESERVED REGISTER 24
10.3.33 DUM1, RESERVED REGISTER 24

11 TAPE AND REEL INFORMATION 25

11.1 CARRIER TAPE 25
11.2 PIN1 DIRECTION 25
11.3 REEL 26

12 PACKAGE DESCRIPTION 27

13 RECOMMENDED LAND PATTERN 27

14 REFLOW 28

15 REVISION HISTORY 29

16 DISCLAIMER 30

 Copyright © 2016 SHANGHAI AWINIC TECHNOLOGY CO., LTD

1 PIN CONFIGURATION AND TOP MARK

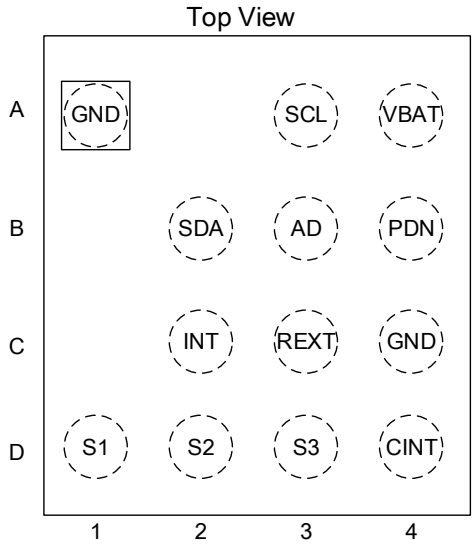

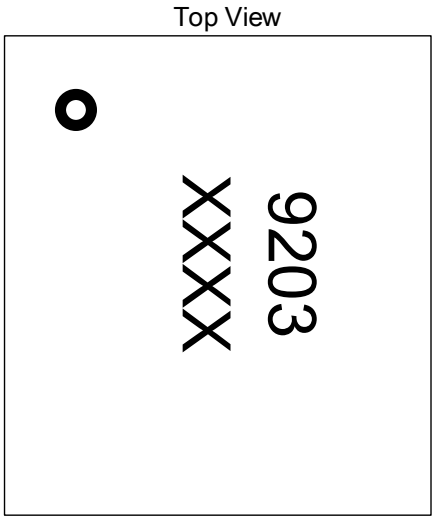

9203-AW9203CSR
XXXX-Production Tracing Code

2 PIN DEFINITION

No.	NAME	DESCRIPTION
A1	GND	Ground
A2		
A3	SCL	Clock input of I²C Interface
A4	VBAT	Power supply (3.0V to 4.5V)
B1		
B2	SDA	Data I/O of I²C Interface
B3	AD	I²C Address Select
B4	PDN	Power-down input , low active, internal 1MΩ pull-down resistor
C1		
C2	INTN	Open-drain Interrupt output, low active. Typically connected to VIO via a 4.7kΩ resistor
C3	REXT	External resistor for adjusting sensitivity (typical is 10kΩ)
C4	GND	Ground
D1	S1	Capacitive Touch Input S1
D2	S2	Capacitive Touch Input S2
D3	S3	Capacitive Touch Input S3
D4	CINT	External reference capacitor(typical is 4.7nF)

Copyright © 2016 SHANGHAI AWINIC TECHNOLOGY CO., LTD

3 FUNCTIONAL BLOCK DIAGRAM

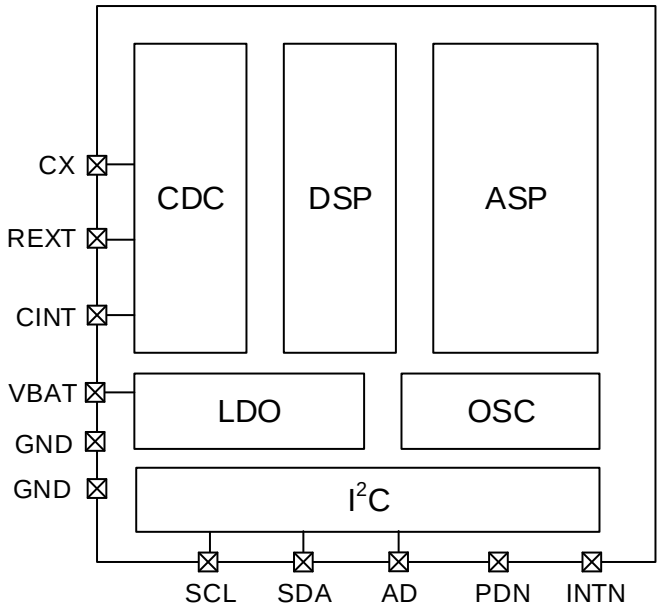

Figure 2 FUNCTIONAL BLOCK DIAGRAM

4 TYPICAL APPLICATION CIRCUITS

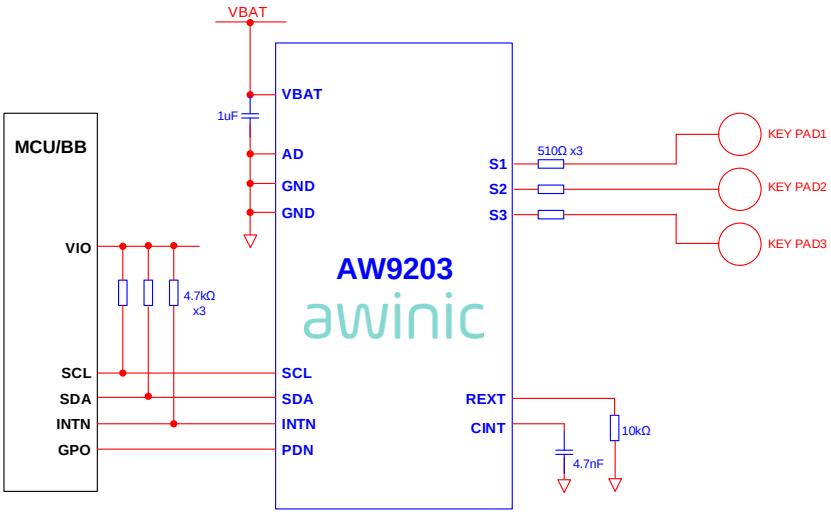

Figure 3 AW9203 Typical Application Circuit

NOTE1、Pin S1/S2/S3 must connect a 500Ω ~ 600Ω resistor.

NOTE2、C_{INT} and R_{EXT} should be placed as close as possible to the chip.

Copyright © 2016 SHANGHAI AWINIC TECHNOLOGY CO., LTD

5 ORDERING INFORMATION

Part Number	Temperature	Package	Marking	Moisture Sensitivity Level	Environmental Information	Delivery Form
AW9203CSR	-40℃～85℃	CSP1.59x 1.75-13L	9203	MSL1	ROHS+HF	3000 units/ Tape and Reel

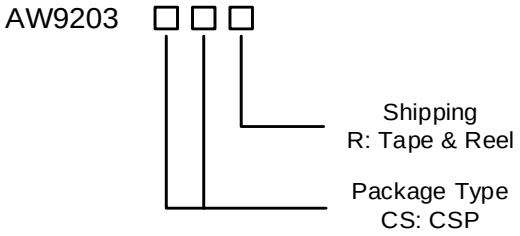

6 ABSOLUTE MAXIMUM RATINGS(NOTE 3)

PARAMETERS		RANGE
Supply voltage range V_{BAT}		-0.3V to 5V
Input voltage range	SCL, SDA	-0.3V to 3.6V
	PDN	-0.3V to 4.5V
Output voltage range	SDA, INTN	-0.3V to 3.6V
Junction-to-ambient thermal resistance θ_{JA}		45℃/W
Operating free-air temperature range		-40℃ to 85℃
Maximum Junction temperature T_{JMAX}		150℃
Storage temperature T_{STG}		-55℃ to 125℃
Lead Temperature (Soldering 10 Seconds)		260℃
ESD(NOTE 4)		
HBM (human body model)		±8000V
MM (machine mode)		±300V
CDM (charge device mode)		±2000V
Latch-up		
Test Condition: JEDEC STANDARD NO.78B DECEMBER 2008		+IT：450mA -IT：-450mA

NOTE3: Conditions out of those ranges listed in "absolute maximum ratings" may cause permanent damages to the device. In spite of the limits above, functional operation conditions of the device should within the ranges listed in "recommended operating conditions". Exposure to absolute-maximum-rated conditions for prolonged periods may affect device reliability.

NOTE4: The human body model is a 100pF capacitor discharged through a 1.5kΩ resistor into each pin. Test method: MIL-STD-883G Method 3015.7

 Copyright © 2016 SHANGHAI AWINIC TECHNOLOGY CO., LTD

7 ELECTRICAL CHARACTERISTICS

V_{BAT}=3.8V, T_A=25℃ for typical values (unless otherwise noted)

PARAMETER		TEST CONDITION	MIN	TYP	MAX	UNIT
V_{BAT}	Power supply	-	3.0	3.8	4.5	V
$I_{SHUTDOWN}$	Current in Shutdown mode	PDN=GND		8	15	μA
$I_{STANDBY}$	Current in Standby mode	PDN=1.8V		130	160	μA
I_{ACTIVE}	Current in Active mode	PDN=1.8V, GCR=0x02		0.85	1.0	mA
F_{OSC}	Internal oscillator Frequency accuracy (16MHz)		14.8	16	17.2	MHz
Digital Logical Interface						
V_{IL}	Logic input high level	SDA,SCL,PDN			0.45	V
V_{IH}	Logic input low level	SDA,SCL,PDN	1.1			V
I_{IL}	Low level input current	SDA,SCL,PDN		5		nA
I_{IH}	High level input current	SDA,SCL,PDN		5		nA
V_{OL}	Logic output low level	SDA, INTN I_{OUT}=3mA			0.4	V
I_{OL}	Maximum output current	SDA, INTN			10	mA
I_L	Output leakage current	SDA,INTN open drain			1	μA
I^2C Interface						
F_{SCL}	I^2C-BUS clock frequency				400	kHz
$T_{Deglitch}$	SCL deglitch time			200		ns
	SDA deglitch time			250		ns
Capacitance Button						
SX_{range}	Range(NOTE5)	SX	0		80	pF
$SX_{resolution}$	Resolution(NOTE5)	SX	0.02			pF
F_{SCAN}	Scan frequency			30		Hz
T_{DET}	Response time			100		ms

NOTE5：the value is tested in default configuration.

 Copyright © 2016 SHANGHAI AWINIC TECHNOLOGY CO., LTD

8 I²C INTERFACE TIMING

Parameter Name			MIN	TYP	MAX	UNIT
F_{SCL}	Interface Clock frequency				400	kHz
$T_{DEGLITCH}$	Deglitch time	SCL		200		ns
		SDA		250		ns
$T_{HD:STA}$	(Repeat-start) Start condition hold time		0.6			μs
T_{LOW}	Low level width of SCL		1.3			μs
T_{HIGH}	High level width of SCL		0.6			μs
$T_{SU:STA}$	(Repeat-start) Start condition setup time		0.6			μs
$T_{HD:DAT}$	Data hold time		0			μs
$T_{SU:DAT}$	Data setup time		0.1			μs
T_R	Rising time of SDA and SCL				0.3	μs
T_F	Falling time of SDA and SCL				0.3	μs
$T_{SU:STO}$	Stop condition setup time		0.6			μs
T_{BUF}	Time between start and stop condition		1.3			μs

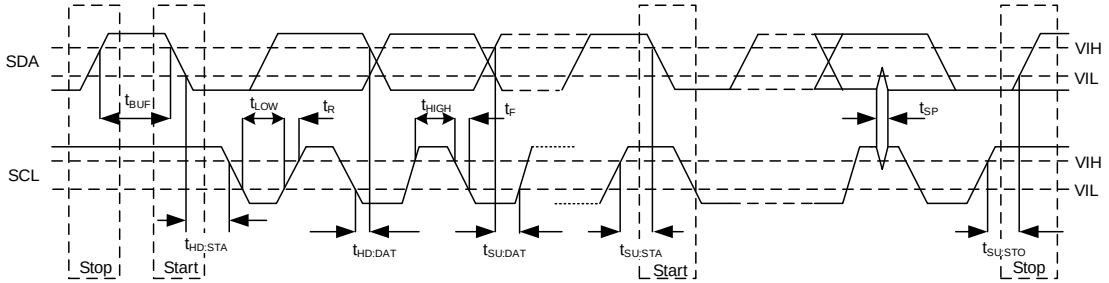

Copyright © 2016 SHANGHAI AWINIC TECHNOLOGY CO., LTD

9 FUNCTIONAL DESCRIPTION

9.1 WORK MODE

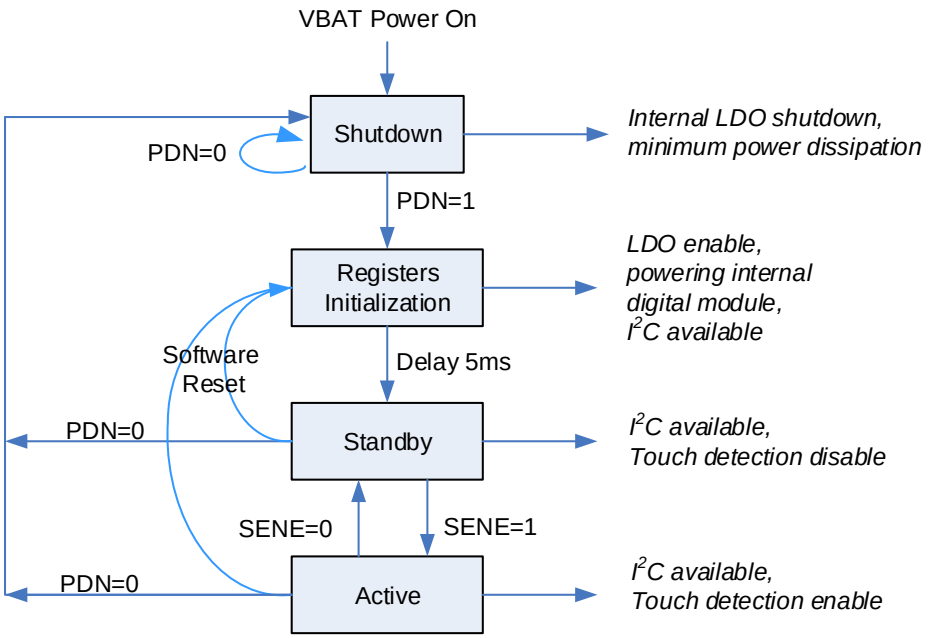

Figure 4 AW9203 Work Mode

After VBAT powered on, if PDN pin is low, the AW9203 is in shut-down mode, the current consumption is less than 15μA. When PDN pin becomes high, the internal LDO is activated, and a power-on reset (POR) signal is generated to initialize all internal registers, the device enters standby mode, this is a low power consumption mode, when all circuit functions are disabled. In standby mode, I²C interface is active, all internal configuration register can be written. If control bit GCR.SENE is written high, the device enters the active mode.

9.2 RESET

9.2.1 Hardware Reset

When PDN pin changes from low to high, the power-up reset (POR) signal is generated, all internal registers are reset.

9.2.2 Software Reset

Writing 0x55AA to register RSTR via I²C interface will activate a software reset to reset all internal registers.

9.3 I²C INTERFACE

AW9203 supports the I²C serial bus and data transmission protocol in fast mode at 400kHz. It operates as a slave on the I²C bus. Connections to the bus are made via the open-drain I/O pins SCL and SDA. The pull-up resistor can be selected in the range of 1k~10kΩ and the typical value is 4.7kΩ. AW9203 can support different high level (1.8V~3.3V) of this I²C interface.

9.3.1 Device Address

The I²C device address (7-bit, followed by the R/W bit(Read=1/Write=0)) of AW9203 depends on the AD pin status. When AD level is low, the I²C address is 0x2C; when AD level is high, the I²C address is 0x2D.

 Copyright © 2016 SHANGHAI AWINIC TECHNOLOGY CO., LTD

0	1	0	1	1	0	AD	R/$\overline{W}$

Figure 5 Device Address Configuration

9.3.2 Data Validation

When SCL is high level, SDA level must be constant. SDA can be changed only when SCL is low level.

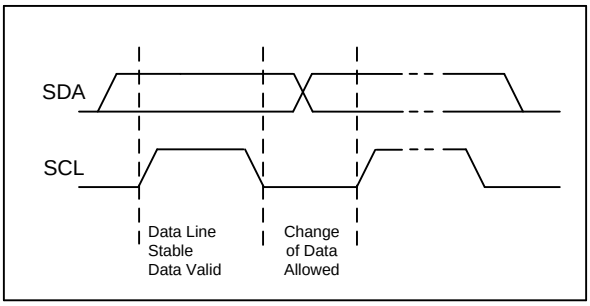

Figure 6 Data Validation Diagram

9.3.3 ACK(Acknowledgement)

ACK means the successful transfer of I2C bus data. After master sends 8bits data, SDA must be released; SDA is pulled to GND by slave device when slave acknowledges.

When master reads, AW9203 sends 8bit data, releases the SDA and waits for ACK from master. If ACK is send and I^{2}C stop is not send by master, AW9203 sends the next data. If ACK is not send by master, AW9203 stops to send data and waits for I^{2}C stop.

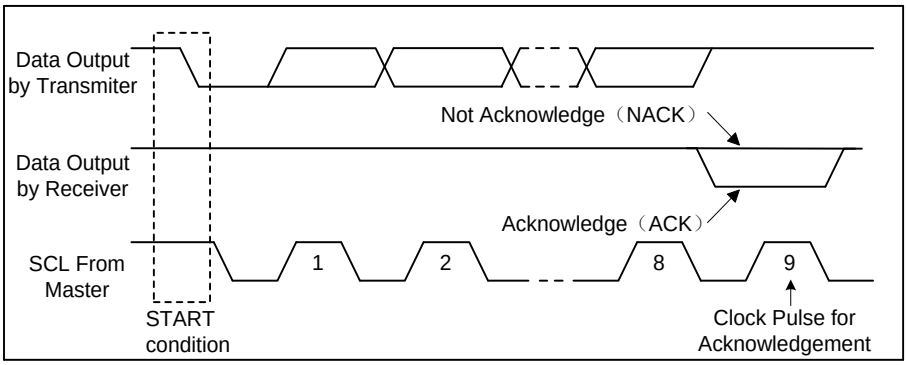

Figure 7 I^{2}C ACK Timing

9.3.4 I^{2}C Start/Stop

I2C start: SDA changes form high level to low level when SCL is high level.

I2C stop: SDA changes form low level to high level when SCL is high level.

 Copyright © 2016 SHANGHAI AWINIC TECHNOLOGY CO., LTD

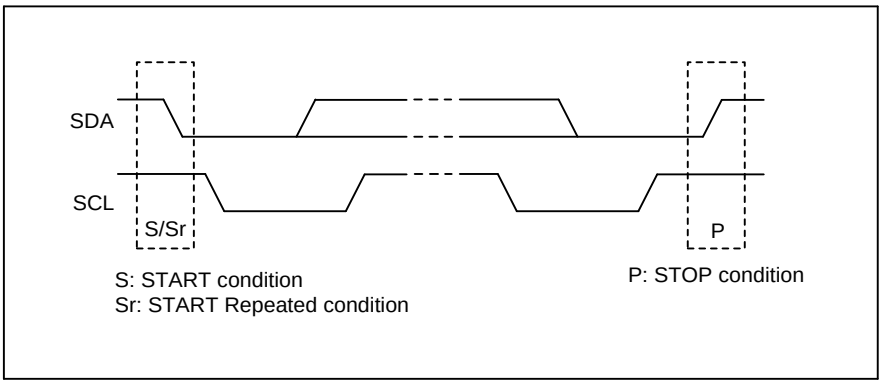

Figure 8 I²C Start/Stop Condition Timing

9.3.5 Write Cycle

One data bit is transferred during each clock pulse. Data is sampled during the high state of the serial clock (SCL). Consequently, throughout the clock's high period, the data should remain stable. Any changes on the SDA line during the high state of the SCL and in the middle of a transaction, aborts the current transaction. New data should be sent during the low SCL state. This protocol permits a single data line to transfer both command/control information and data using the synchronous serial clock.

Each data transaction is composed of a Start Condition, a number of byte transfers (set by the software) and a Stop Condition to terminate the transaction. Every byte written to the SDA bus must be 8 bits long and is transferred with the most significant bit first. After each byte, an Acknowledge signal must follow.

In a write process, the following steps should be followed:

a) Master device generates START condition. The "START" signal is generated by lowering the SDA signal while the SCL signal is high.

b) Master device sends slave address (7-bit) and the data direction bit (w = 0).

c) Slave device sends acknowledge signal if the slave address is correct.

d) Master sends control register address (8-bit)

e) Slave sends acknowledge signal

f) Master sends data high 8Bit to be written to the addressed register

g) Slave sends acknowledge signal

h) Master sends data low 8Bit to be written to the addressed register

I) Slave sends acknowledge signal

j) Master generates STOP condition to indicate write cycle end

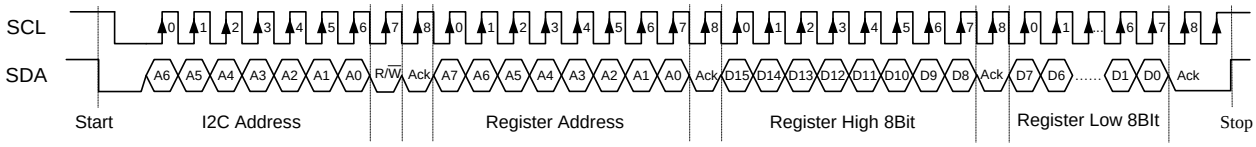

Figure 9 AW9203 I²C Write Timing

9.3.6 Read Cycle

In a read cycle, the following steps should be followed:

a) Master device generates START condition

 Copyright © 2016 SHANGHAI AWINIC TECHNOLOGY CO., LTD

b) Master device sends slave address (7-bit) and the data direction bit (w = 0).

c) Slave device sends acknowledge signal if the slave address is correct.

d) Master sends control register address (8-bit)

e) Slave sends acknowledge signal

f) Master generates STOP condition followed with START condition or REPEAT START condition

g) Master device sends slave address (7-bit) and the data direction bit (r = 1).

h) Slave device sends acknowledge signal if the slave address is correct.

i) Slave sends data high 8Bit from addressed register.

j) Master sends acknowledge signal

k) Slave sends data low 8Bit from addressed register.

l) If the master device sends acknowledge signal, the slave device will increase the control register address by one, then send the next data from the new addressed register. If master sends no acknowledge signal, the slave device stop to send data and wait for STOP condition.

m) If the master device generates STOP condition, the read cycle is ended.

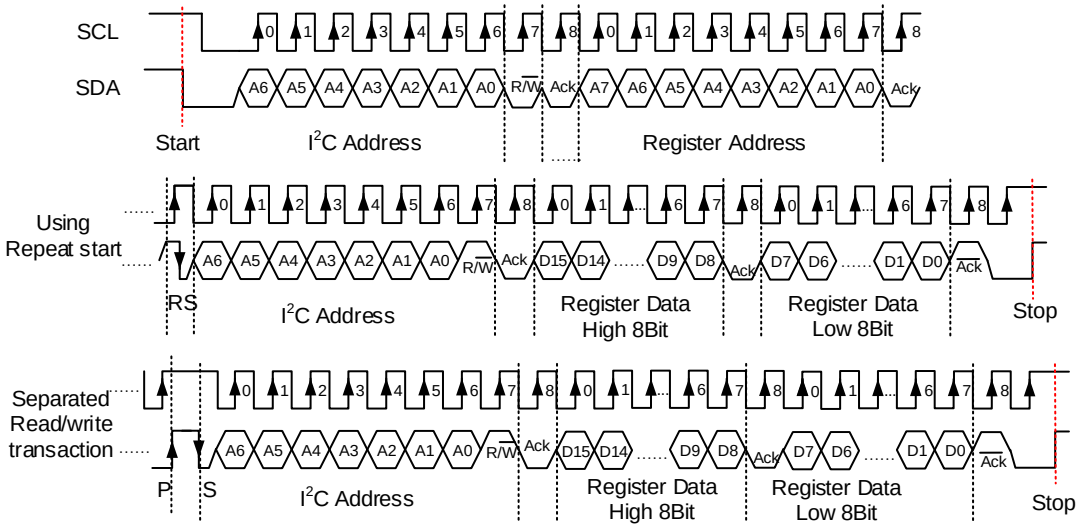

Figure 10 AW9203 I²C Read Timing

9.4 OSCILLATOR

An internal oscillator provides clock for both capacitive touch detecting circuit. If register bit GCR.SENE is high, the OSC starts to work, the start-up time is about 5 us. When the register bit GCR.SENE are low, the internal OSC stops.

9.5 CAPACITIVE TOUCH DETECTION

With high performance sigma-delta capacitive digital conversion technology, the capacitance on SX pin is measured, the finger touch decision is made according to the increment of SX capacitance. Before finger touching, the key capacitance is only formed by the sensing electrode and surrounding ground, which is called intrinsic capacitance usually. When finger touching, an additional parallel plate capacitor capacitance (electrode-media-finger) is formed, resulting in the capacitance increment on pin SX. In general, because of the variation of different electrode size and dielectric characteristic of different media materials, the capacitance increment caused by finger touch is about 0.5pF～5pF.

 Copyright © 2016 SHANGHAI AWINIC TECHNOLOGY CO., LTD

In AW9203, the CDC resolution is 12Bit. the sampling period can be set by control register. The capacitive sample are send to DSP for further processing, including digital filtering, base-line compensation, touch and gesture judge, and so on.

The capacitive sensitivity can be adjusted by REXT resistance. The bigger the REXT value, the higher the sensitivity. By default, 10kΩ to GND resistor is recommended.

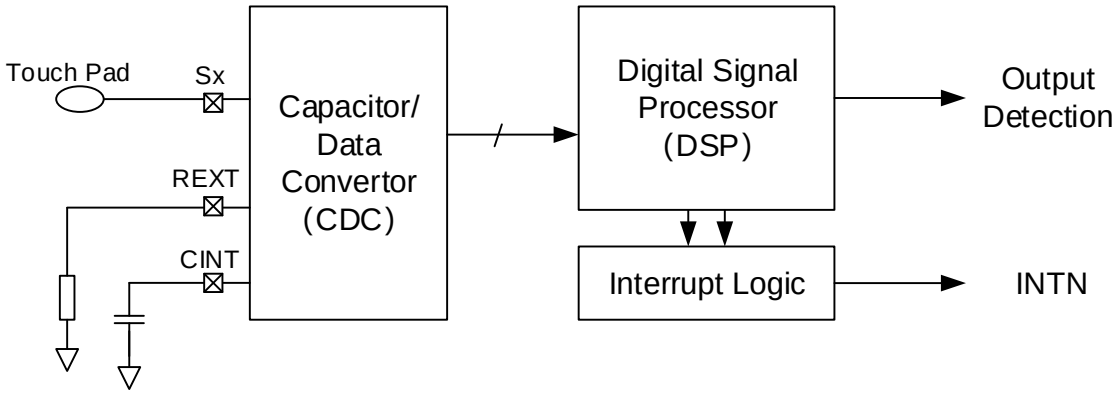

Figure 11 Functional Block of Capacitive Detection Circuit

When control bit GCR.SENE is 0, all capacitive touch detection circuit is reset. When control bit GCR.SENE is high, the SLPR register control the enable/disable touch detection. If control bit SLPR.SLPx is 0, channel x touch detection function is activated. If control bit SLPR.SLPx set to 1, channel x touch detection is disabled to save power consumption.

9.5.1 Touch Status and Interrupt

In AW9203 , the touch status can be read in register KEYST (0x31).

Touching status can generate the interrupt output on pin INTN, the interrupt enable control is defined by register KINTER (0x03). There are 4 interrupt mode selection defined by control bit KINTER.KIMD[1:0].

- KIMD[1:0] =00 interrupt generates when touch status changed
- KIMD[1:0] =01 interrupt generates when touch status changed from 1 to 0
- KIMD[1:0] =10 interrupt generates when touch status changed from 0 to 1
- KIMD[1:0] =11 interrupt generates when touch status is 1

The INTN pin will be pulled to GND when interrupt generates. The interrupt status can be clear by reading the register KISR (0x32) and INTN pin will be pulled up to V_{IO}.

9.5.2 Gesture Status

Besides for touch detection, AW9203 provides click gesture detection function, including slide gesture, single, double and triple click. Once the predefined gesture is detected，interrupt can be generated if corresponding interrupt enable bit is set in control register GIER. This function will help reduce programming on external MCU, and save the system power consumption, improve the usability.

The slide gesture detects the finger moving on the touchpad. When finger moves on the touchpad, the capacitive change can be detected one by one and the gesture module can identify the order of touch key and judge the slide gesture.

Register GSTR (0x20/0x21) defines the slide gesture.

15	14	13	12	11	10	9	8	7	6	5	4	3	2	1	0
0	KCODE1			0	KCODE2			0	KCODE3			0	0	0	0

KCODE1~3 define 3bit key code. The code can be 3(s1), 4(s2), 5(s3), 0(no key).

 Copyright © 2016 SHANGHAI AWINIC TECHNOLOGY CO., LTD

The tap gesture is somewhat like the click on touchpad or touch screen. When finger clicks on the touchpad quickly, the single, double or triple click can be recognized. The continuously, fast finger click on touch area will make the touch detection status switching between ON and OFF quickly. By analyzing the characteristic of ON and OFF，pre-defined tap gesture can be detected. In practice application , the double tap gesture is now widely used.

Register TAPR(0x27) defines the click gesture.

Register TAPR:

15	14	13	12	11	10	9	8	7	6	5	4	3	2	1	0
0	0	0	0	0	0	0	0	0	CSEL			0	0	TIMES	

TIMES defines the type of clicking, if TIMES =01, single click is enabled; if TIMES=10, double click is enabled; if TIMES=11, triple click is enabled, ,CSEL must set as 000001 for AW9203.

The register GIER(0x2D) can enable/disable interrupt triggered by detected click gesture. When defined click gesture is detected, the TIS bit in register GISR will be set, if the TIE bit in register GIER is set, interrupt will occur. The TIS bit will be clear after register GISR is read via I^2C interface.

 Copyright © 2016 SHANGHAI AWINIC TECHNOLOGY CO., LTD

10 REGISTER DESCRIPTION

10.1 REGISTER CONFIGURATION

Address	Register	15	14	13	12	11	10	9	8	7	6	5	4	3	2	1	0
0x00	IDRST	D15	D14	D13	D12	D11	D10	D9	D8	D7	D6	D5	D4	D3	D2	D1	D0
0x01	GCR	0	0	0	0	0	0	0	0	0	0	0	0	0	0	SENE	-
0x02	SLPR	0	0	0	0	0	0	0	0	0	0	0	SLP	SLP	SLP	0	0
0x03	KINTER	0	0	0	0	0	0	KIMD		FRME	0	0	IE3	IE2	IE1	0	0
0x04	-	RESERVED															
0x05	-	RESERVED															
0x06	-	RESERVED															
0x07	AKSCR	0	0	0	0	0	0	0	0	0	0	0	ASEL			0	0
0x08	SLSR			SLID_INTERVAL						TT	0	0	SLIDSEL			0	0
0x09 0x0A 0x0B	-	RESERVED															
0x0C 0x0D 0x0E	JDGTHR	CLRTH								SETTH							
0x0F	-	RESERVED															
0x10	THR	0x08								NOISTH							
0x11	SCFG1	0	0	0	0	0	0	0	0	SCMD	0	NSMD	SCNUM				
0x12	SCFG2	0	0	0	0	0	SEED			RFFLTEN		0		SENS			
0x13	-	RESERVED															
0x14	OFSR1	0	0	0	EN2	OFFSET2				0	0	0	EN1	OFFSET1			
0x15	OFSR2	0	0	0	0	0	0	0	0	0	0	0	EN3	OFFSET3			
0x16	DOFCR1	DOF2				DOF1				0	0	0	0	0	0	0	0
0x17	DOFCR2													DOF3			
0x18	IDLECR	INCR[7:0]								0	IPER[6:0]						
0x19	MTOTR	0								MOT							
0x1A	DISMAX	D15	D14	D13	D12	D11	D10	D9	D8	D7	D6	D5	D4	D3	D2	D1	D0
0x1B	SETCNT	CCNT								SCNT							
0x1C	BLCTH	BLU								BLD							
0x1D	BLDTH	0	0	0	0	0	0	0	0	BLDTH							
0x1E	MCR	0	0	0	0	0	0	0	0	0	0	0	0	0	0	DSEL	
0x1F	-	RESERVED															

Copyright © 2016 SHANGHAI AWINIC TECHNOLOGY CO., LTD

Address	Register	15	14	13	12	11	10	9	8	7	6	5	4	3	2	1	0
0x20	GDCFGR	0	0	0	0	0	0	GSTMD		AKST	AKSG	0	S3	S2	S1	0	0
0x21	GDTR	0	0	0	0	0	0	0	0	GOFFMAX							
0x22	TDTR	TONMAX								TOFFMAX							
0x23	GEST1	0	KEY1			0	KEY2			0	KEY3			0	0	0	0
0x24	GEST2	0	KEY1			0	KEY2			0	KEY3			0	0	0	0
0x25	-	RESERVED															
0x26	-	RESERVED															
0x27	TAPR	0	0	0	0	0	0	0	0	0	S3	S2	S1	0	0	TIMES	
0x28 - 0x2C	-	RESERVED															
0x2D	GIE	0	0	0	0	0	0	0	0	0	0	0	TIE1	0	0	GIE2	GIE1
0x2E	GIS	0	0	0	0	0	0	0	0	0	0	0	TIS1	0	0	GIS2	GIS1
0x2F	GTIMR	0	0	0	0	0	0	0	0	GTIMR							
0x30	KISR	0	0	0	0	0	0	0	IDST	0	-	0	INT3	INT2	INT1	0	0
0x31	RAWST	0	0	0	0	0	0	0	0	0	0	0	S3	S2	S1	0	0
0x32	KEYST	0	0	0	0	0	0	0	0	SBI	0	0	S3	S2	S1	0	0
0x33 0x34	-	RESERVED															
0x35	SMOVCNT	0								MOVCNT							
0x36 0x37	-	RESERVED															
0x38 0x39 0x3A	KDATA1 KDATA2 KDATA3	KDATA															
0x3B	-	RESERVED															

Copyright © 2016 SHANGHAI AWINIC TECHNOLOGY CO., LTD

10.2 GLOBAL REGISTER DESCRIPTION

10.2.1 IDRST, Chip ID and Software Reset

Address: 0x00, R/W															
15	14	13	12	11	10	9	8	7	6	5	4	3	2	1	0
D15	D14	D13	D12	D11	D10	D9	D8	D7	D6	D5	D4	D3	D2	D1	D0
Bit	Symbol		Description												
15:0	IDRST		Chip ID: 0xB223 Software Reset: write 0x55AA to IDRST, reset the whole device.												

10.2.2 GCR, Global Control Register

Address: 0x01, R/W, default: 0x0000															
15	14	13	12	11	10	9	8	7	6	5	4	3	2	1	0
0	0	0	0	0	0	0	0	0	0	0	0	0	0	SENE	-
Bit	Symbol		Description												
1	SENE		Touch Key detection function 0: disable touch key detection (default) 1: enable touch key detection												

10.3 CAPACITIVE TOUCH DETECTION REGISTERS

10.3.1 SLPR, Sensor Sleep Control Register

Address: 0x02, R/W, default: 0x0000															
15	14	13	12	11	10	9	8	7	6	5	4	3	2	1	0
0	0	0	0	0	0	0	0	0	0	0	SLP3	SLP2	SLP1	0	0
Bit	Symbol		Description												
4:2	SLP3~SLP1		Sensor sleep control 0: sensor work (default) 1: sensor sleep												

10.3.2 KINTER, Key Interrupt Enable Register

Address: 0x03, R/W, default: 0x0000															
15	14	13	12	11	10	9	8	7	6	5	4	3	2	1	0
0	0	0	0	0	0	KIMD		FRME	0	0	IE3	IE2	IE1	0	0
Bit	Symbol		Description												
4:2	IE3~1		Key Interrupt enable, pull INTN to GND when triggering interrupt. 0: disable interrupt (default) 1: enable interrupt												
5:6	-		Reserved, must be 0												
7	FRME		Sensor Scan Frame interrupt enable 0: disable frame interrupt (default) 1: enable frame interrupt												
9:8	KIMD		Interrupt mode 00: interrupt occurs when touch status changed (default) 01: interrupt occurs when touch status changed from 1 to 0 10: interrupt occurs when touch status changed from 0 to 1 11: interrupt occurs when touch status is 1												

10.3.3 AKSCR, Adjacent Key Suppression Configuration Register

Address: 0x07, R/W, default: 0x0000															
15	14	13	12	11	10	9	8	7	6	5	4	3	2	1	0
0	0	0	0	0	0	0	0	0	0	0	ASEL[3:1]			0	0
Bit	Symbol		Description												
4:2	ASEL		Adjacent Key Suppression Configuration, only one of ASEL=1 keys can be triggered.												

 Copyright © 2016 SHANGHAI AWINIC TECHNOLOGY CO., LTD

10.3.4 SLSR, Slide Configuration Register

Address: 0x08, R/W, default: 0x0200															
15	14	13	12	11	10	9	8	7	6	5	4	3	2	1	0
0	0	SLID_INTERVAL						TT	0	0	SLIDSEL			0	0

Bit	Symbol	Description
4:3	SLIDSEL	Slide Configuration 0: Unused for slide configuration 1: Used for slide configuration
6	-	Reserved, must be 0
7	TT	Sliders coordinate detection mode 0: Not end to end mode 1: End to end mode
13:8	SLD_INTERVAL	Key interval time of slider detection effective, T=SLIDINTVAL*Tscan(one frame cycle)

10.3.5 JDGTHRn, key status judge configuration register

Address: 0x0C~0x0E, R/W, default: 0x080F															
15	14	13	12	11	10	9	8	7	6	5	4	3	2	1	0
CLRTH								SETTH							

Bit	Symbol	Description
0:7	SETTH	Touch on threshold
15:8	CLRTH	Touch off threshold

10.3.6 NOISETHR, Noise Threshold Register

Address: 0x10, R/W, default: 0x080F															
15	14	13	12	11	10	9	8	7	6	5	4	3	2	1	0
0x08								NOISETH							

Bit	Symbol	Description
7:0	NOISETH	Noise gate threshold (default value is 0x0F)
15:8	-	Reserved

10.3.7 SCFG1, Scan Configuration Register

Address: 0x11, R/W, default: 0x0004															
15	14	13	12	11	10	9	8	7	6	5	4	3	2	1	0
0	0	0		0	0	0	0	SCNMD	0	0	SCNUM				

Bit	Symbol	Description
4:0	SCNUM	Scan cycle number, default value is 4. The bigger scan cycle number, the longer scan time, and the higher the detection sensitivity. SCNUM=0, 256 SCNUM!=0, SCNUM*512
7	SCNMD	Scan mode 0: scan all keys, the cycle time is constant 1: scan the selected keys
15~8	-	Reserved, must be 0

10.3.8 SCFG2, Scan Configuration Register

Address: 0x12, R/W, default: 0x0107															
15	14	13	12	11	10	9	8	7	6	5	4	3	2	1	0
0	0	0	0	0	SEED			RFFLTEN		0		SENS			

Bit	Symbol	Description
3:0	SENS	Sensitivity configuration, there are 16 level available. The less the value of SENS, the higher the sensitivity. 0000 is the highest sensitivity, 1111 is the lowest sensitivity, the default value is 0111.
5:4	-	Reserved, must be 0
7:6	RFFLTEN	RF filter enable, when enable RF filter, SCFG1.SCNUM should be bigger than 4. 00: RF filter off (default) 01: RF filter mode 1 enable 10: RF filter mode2 enable

Copyright © 2016 SHANGHAI AWINIC TECHNOLOGY CO., LTD

		11: RF filter off
10:8	SEED	ADC output data length selection 000: ADC/16 001: ADC/8 (default) 010: ADC/4 011: ADC/2 100: ADC/1

10.3.9 OFSR1, Key Capacitance Offset Register

Address: 0x14, R/W, default: 0x0000															
15	14	13	12	11	10	9	8	7	6	5	4	3	2	1	0
0	0	0	OFSEN2	OFFSET2				0	0	0	OFSEN1	OFFSET1			

Bit	Symbol	Description
3:0	OFFSET1	S1 capacitance offset value
4	OFSEN1	S1 capacitance offset enable
7:5	-	Reserved, must be 0
11:8	OFFSET2	S2 capacitance offset value
12	OFSEN2	S2 capacitance offset enable
15:13	-	Reserved, must be 0

10.3.10 OFSR2, Key Capacitance Offset Register

Address: 0x15, R/W, default: 0x0000															
15	14	13	12	11	10	9	8	7	6	5	4	3	2	1	0
0	0	0	0	0	0	0	0	0	0	0	OFSEN3	OFFSET3			

Bit	Symbol	Description
3:0	OFFSET3	S3 capacitance offset value
4	OFSEN3	S3 capacitance offset enable
7:5	-	Reserved, must be 0
15:8	-	Reserved, must be 0

10.3.11 DOFCR1-2, ADC Digital Offset Register

Address: 0x16, R/W, default: 0x0000															
15	14	13	12	11	10	9	8	7	6	5	4	3	2	1	0
DOF2				DOF1				-							
-												DOF3			

Bit	Symbol	Description
11:8 15:12 3:0	DOFx	digital offset of ADC data. Since the ADC is 12bit, if the key parasitic capacitance is large enough , ADC data will be more than 12 bit and overflow. The digital offset can compensate partly the ADC data within acceptable range by minus a setting value. 0000 : offset= 0 (default) 0001: offset = 2000 0010: offset = 4000 0011: offset = 6000 0100: offset = 8000 0101: offset = 10000 0110: offset = 12000 0111: offset = 14000 1xxx: not used

10.3.12 IDLECR, IDLE Status Configuration Register

Address: 0x18, R/W, default: 0x1805															
15	14	13	12	11	10	9	8	7	6	5	4	3	2	1	0
INCR								0	IPER						

Bit	Symbol	Description
6:0	IPER	Scan period setting in IDLE mode, default is 05H

Copyright © 2016 SHANGHAI AWINIC TECHNOLOGY CO., LTD

		Scan once every IPER normal scan periods
7	-	Reserved, must be 0
15:8	INCR	Time to enter IDLE mode, if no touch detected. The actual time can be calculated as : T=INCR*T_{SCAN}*16。

10.3.13 MTOTR, Maximum Touch On Time Register

Address: 0x19, R/W, default:0x0010															
15	14	13	12	11	10	9	8	7	6	5	4	3	2	1	0
0								MOT							

Bit	Symbol	Description
7:0	MOT	Maximum time of keeping touch on status, T= MOT*T_{SCAN}*128 T_{SCAN} is capacitance touch key scanning cycle. T_{SCAN} = Keys * SCNUM * 2us
15:8	-	Reserved, must be 0

10.3.14 DISMAX, Maximum Margin of Valid Data

Address: 0x1A, R/W, default: 0x0040															
15	14	13	12	11	10	9	8	7	6	5	4	3	2	1	0
DISMAX															

Bit	Symbol	Description
15:0	DISMAX	Maximum margin of valid data When the different of two consecutive raw data is larger than DISMAX, discard the raw data.

10.3.15 SETCNT, Touch Decision De-bounce Count

Address: 0x1B, R/W, default: 0x0404															
15	14	13	12	11	10	9	8	7	6	5	4	3	2	1	0
CCNT								SCNT							

Bit	Symbol	Description
7:0	SCNT	Touch on de-bounce threshold In no touch state, if delta over SETTHR for SCNT times continuously, touch status is set to1.
15:8	CCNT	Touch release de-bounce threshold In touch state, if delta below CLRTHR for CCNT times continuously, touch status is cleared.

10.3.16 BLCTH, Baseline Trace Configuration Register

Address: 0x1C, R/W, default: 0x1008															
15	14	13	12	11	10	9	8	7	6	5	4	3	2	1	0
BLU								BLD							

Bit	Symbol	Description
7:0	BLD	Baseline trace down speed, default value is 0x08 The bigger the BLD, the slower the trace down.
15:8	BLU	Baseline trace up speed, default value is 0x10 The bigger the BLU, the slower the trace up.

10.3.17 BLDTH, Baseline Reset Threshold

Address: 0x1D, R/W, default: 0x0000															
15	14	13	12	11	10	9	8	7	6	5	4	3	2	1	0
0								BLDTH							

Bit	Symbol	Description
7:0	BLDTH	Baseline abnormal threshold. If row data is less than the value of BLDTH, re-calibration of baseline will be activate. if BLDTH is 0x00, actual abnormal threshold is the same as SETTHR
15:8	-	Reserved, must be 0

 Copyright © 2016 SHANGHAI AWINIC TECHNOLOGY CO., LTD

10.3.18 MCR, Monitor Control Register

Address: 0x1E, R/W, default: 0x0000															
15	14	13	12	11	10	9	8	7	6	5	4	3	2	1	0
-	-	-	-	-	-	-	-	-	-	-	-	-	-	DSEL	

Bit	Symbol	Description
1：0	DSEL	KDATA register output data type selection in DEBUG mode 00: Normal mode , KDATA =0 (default) 01: delta data 10: baseline data 11: raw data

10.3.19 GDCFGR, Gesture Detection Configuration Register

Address: 0x20, R/W, default: 0x0000															
15	14	13	12	11	10	9	8	7	6	5	4	3	2	1	0
0	0	0	0	0	0	GSTMD		AKST	AKSG	0	S3	S2	S1	0	0

Bit	Symbol	Description
5:0	S3~S1	Gesture detection channel choice 0: disable gesture detection 1: enable gesture detection
6	AKSG	0: gesture detection without AKS key status 1: gesture detection with AKS key status
7	AKST	0: tap detection without AKS key status 1: tap detection with AKS key status
9:8	GSTMD	Gesture detection interrupt report mode 00: report after some time when finger leaving 01: report when finger leaving 1x: report when detecting gesture

10.3.20 GDTR, Gesture Detection Time Register

Address: 0x21, R/W, default: 0x07															
15	14	13	12	11	10	9	8	7	6	5	4	3	2	1	0
0	0	0	0	0	0	0	0	GOFFMAX							

Bit	Symbol	Description
7:0	GOFFMAX	Maximum touch off time of gesture detection When finger moves, the touching cannot be detected some times. The gesture ends when the time of touch off over T_{OFFMAX}=GOFFMAX*T_{SCAN}.

10.3.21 TDTR, Tap Detection Register

Address: 0x22, R/W, default: 0x080F															
15	14	13	12	11	10	9	8	7	6	5	4	3	2	1	0
TONMAX								TOFFMAX							

Bit	Symbol	Description
15:8	TONMAX	Maximum touch on time of tap detection The tap is invalid when touch on time over T_{ONMAX}=TONMAX*T_{SCAN}.
7:0	TOFFMAX	Maximum touch off time of tap detection When finger taps, the touching cannot be off some times. The tap ends when the time of touch off over T_{OFFMAX}=TOFFMAX*T_{SCAN}.

10.3.22 GSTR1~2, Gesture Configuration Register

GSTR1: address: 0x23, R/W, default: 0x2340 GSTR2: address: 0x24, R/W, default: 0x4320															
15	14	13	12	11	10	9	8	7	6	5	4	3	2	1	0
0	KCODE1			0	KCODE2			0	KCODE3			0	0	0	0

Bit	Symbol	Description
14:12	KCODE1	Gesture order of number 1 sensor channel 0: None 3: S1

 Copyright © 2016 SHANGHAI AWINIC TECHNOLOGY CO., LTD

		4: S2 5: S3
10:8	KCODE2	Gesture order of number 2 sensor channel 0: None 3: S1 4: S2 5: S3
6:4	KCODE3	Gesture order of number 3 sensor channel 0: None 3: S1 4: S2 5: S3
3:0	-	Reserved, must be 0

The sensor channel is touched one by one when finger moves. AW9203 judges the touch order is the predefined order or not.

KCODE1 is the first touching sensor channel and then KCODE2/3 is detected.

Every gesture configuration must be more than 2 sensor channel and the other is set to 0.

The register is invalid if KCODE1 is 0.

10.3.23 TAPR, Tap Gesture Configuration Register

Address: 0x27, R/W, default: 0x12															
15	14	13	12	11	10	9	8	7	6	5	4	3	2	1	0
0	0	0	0	0	0	0	0	0	CSEL			0	0	TIMES	

Bit	Symbol	Description
1:0	TIMES	Click times 1: single click 2: double click (default) 3: triple click
6:4	CSEL	Tap sensor channel selection 0: disabled 1: enable
15:8	-	Reserved, must be 0

10.3.24 GIER, Gesture Interrupt Enable Register

Address: 0x2D, R/W, default: 0x0000															
15	14	13	12	11	10	9	8	7	6	5	4	3	2	1	0
0	0	0	0	0	0	0	0	0	0	0	TIE	0	0	GIE2	GIE1

Bit	Symbol	Description
1:0	GIE2~1	Gesture detection interrupt 0: disable interrupt 1: enable interrupt
4	TIE	Tap gesture detection interrupt enable 0: disable interrupt 1: enable interrupt
15:5	-	Reserved, must be 0

10.3.25 GISR, Gesture Interrupt Status Register

Address: 0x2E, R(cleared after reading), default: 0x0000															
15	14	13	12	11	10	9	8	7	6	5	4	3	2	1	0
0	0	0	0	0	0	0	0	0	0	0	TIS	0	0	GIS2	GIS1

Bit	Symbol	Description
1:0	GIS2～1	Gesture detection interrupt status 0: no gesture interrupt 1: gesture interrupt
4	TIS	Tap interrupt status 0: no tap interrupt 1: tap interrupt
15:5	-	Reserved

 Copyright © 2016 SHANGHAI AWINIC TECHNOLOGY CO., LTD

10.3.26 GTIMR, Gesture Duration Register

Address: 0x2F, R, default: 0x0000															
15	14	13	12	11	10	9	8	7	6	5	4	3	2	1	0
0	0	0	0	0	0	0	0	GTIMR							

Bit	Symbol	Description
7:0	GTIMR	Gesture duration timer, from touch on to touch off T_{GEST} = GTIMR*T_{SCAN}, 0: no limit

10.3.27 RAWST, Raw Key Status Register

Address: 0x30, R, default: 0x0000															
15	14	13	12	11	10	9	8	7	6	5	4	3	2	1	0
0	0	0	0	0	0	0	IDLST	0	0	0	S3	S2	S1	0	0

Bit	Symbol	Description
4:2	S3～1	Touch status 0: no touch 1: touch on
8	IDLST	IDLE status indication 0: normal scan 1: IDLE mode status

10.3.28 KEYST, AKS Key Status Register

Address: 0x31, R, default: 0x0000															
15	14	13	12	11	10	9	8	7	6	5	4	3	2	1	0
0	0	0	0	0	0	0	0	0	0	0	S3	S2	S1	0	0

Bit	Symbol	Description
5:0	S3～1	AKS key status 0: no touch 1: touch on

10.3.29 KISR, Key Interrupt Status Register

Address:0x32, R(clear by reading), default: 0x0000															
15	14	13	12	11	10	9	8	7	6	5	4	3	2	1	0
0	0	0	0	0	0	0	0	SBI	-	-	IS3	IS2	IS1	-	-

Bit	Symbol	Description
4:2	IS3～1	Key interrupt status 0: no key interrupt 1: key interrupt
6	-	Reserved
7	SBI	Set 1 every frame, clear by reading

10.3.30 MOVCNTR, Slider Move Counter Register

Address: 0x35, R(clear by reading), default: 0x00															
15	14	13	12	11	10	9	8	7	6	5	4	3	2	1	0
0	0	0	0	0	0	0	0	MOVCNTR							

Bit	Symbol	Description
7:0	MOVCNTR	Bit7 is sign bit, means the slide direction. Bit6-0 is the slide data.

10.3.31 KDATAn, Key Data Register

Address: 0x38~0x3A, R, default: 0x0000															
15	14	13	12	11	10	9	8	7	6	5	4	3	2	1	0
KDATAn															

Bit	Symbol	Description
15:0	KDATAn	Sn channel key data (refer register MCR(0x1E))

Copyright © 2016 SHANGHAI AWINIC TECHNOLOGY CO., LTD

10.3.32 DUM0, Reserved Register

Address: 0x3C, R/W, default: 0x0FFF															
15	14	13	12	11	10	9	8	7	6	5	4	3	2	1	0
DUM0															

Bit	Symbol	Description
15:0	DUM0	Reserved register, default is 0x0FFF

10.3.33 DUM1, Reserved Register

Address: 0x3D, R/W, default: 0x0FFF															
15	14	13	12	11	10	9	8	7	6	5	4	3	2	1	0
DUM1															

Bit	Symbol	Description
15:0	DUM1	Reserved register, default is 0x0FFF

Copyright © 2016 SHANGHAI AWINIC TECHNOLOGY CO., LTD

11 TAPE AND REEL INFORMATION

11.1 Carrier Tape

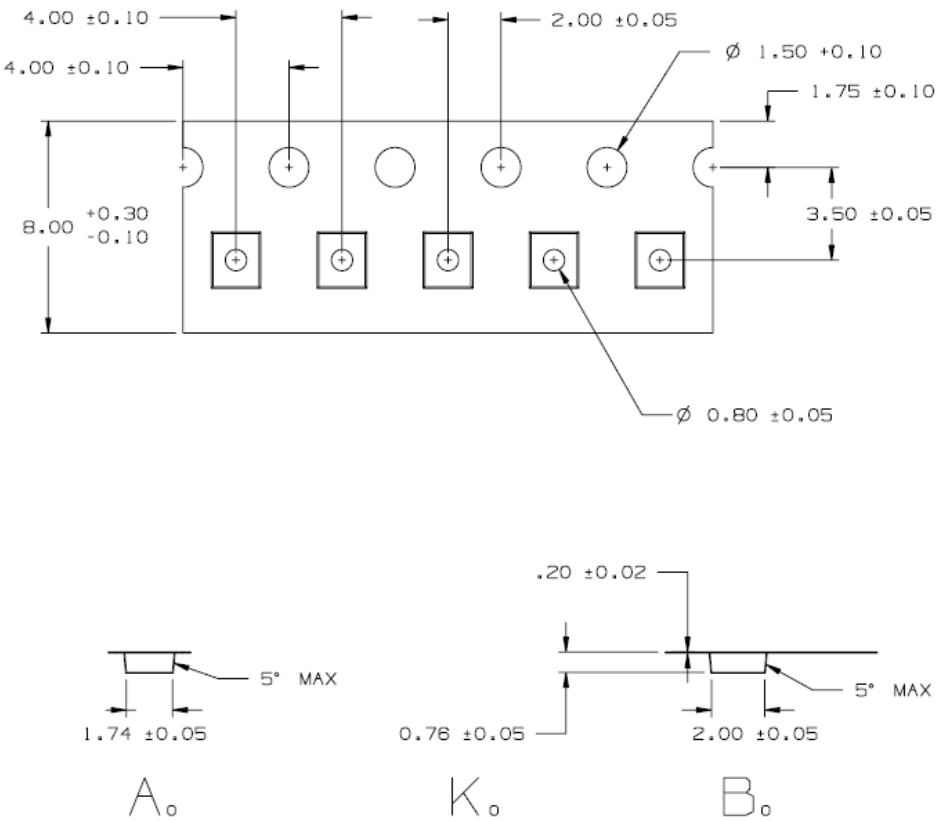

11.2 PIN1 Direction

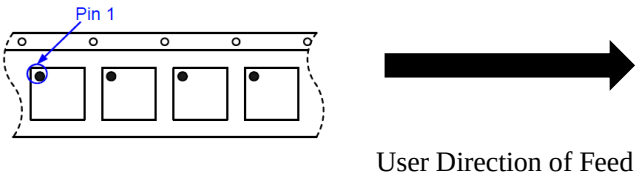

Copyright © 2016 SHANGHAI AWINIC TECHNOLOGY CO., LTD

11.3 Reel

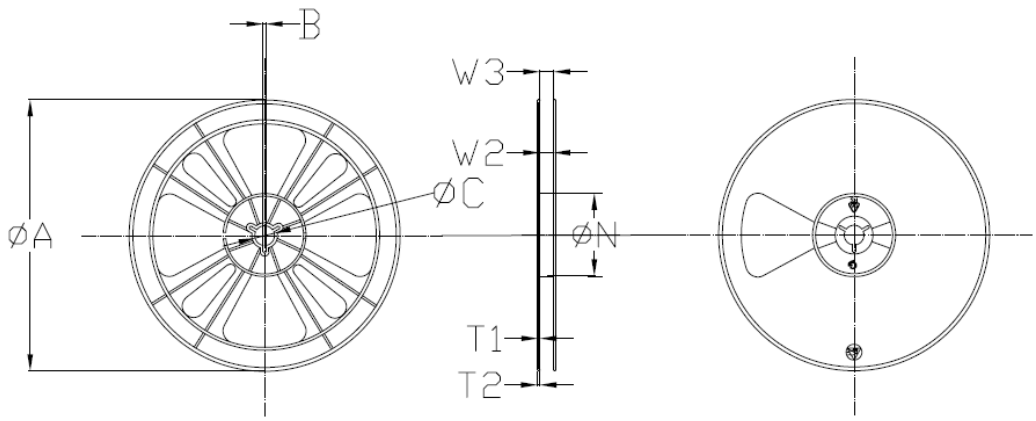

Item	Value&Tolerance
A	179±1.0
B	2.0±0.1
C	13.5±0.2
N	54.8±0.2
W2	9.0±0.2
W3	9.2+1.0
T1	1.2±0.2
T2	1.5±0.2

Note:

1. surface resistivity: 10^{5} to 10^{11} ohms/sq.
2. Restriction criterion of hazardous substance for packing material follow GP-M001.

Copyright © 2016 SHANGHAI AWINIC TECHNOLOGY CO., LTD

12 PACKAGE DESCRIPTION

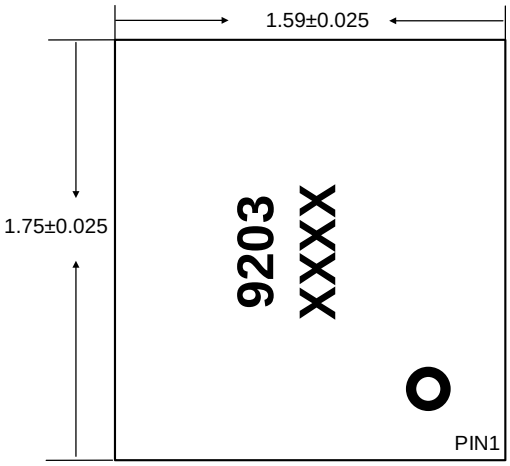

Top View

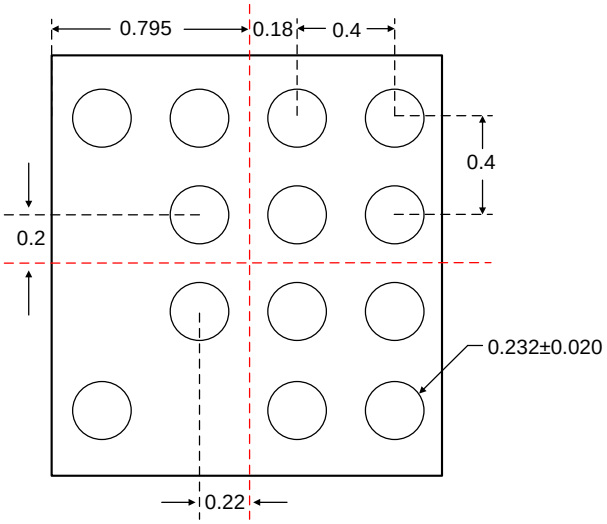

Bottom View

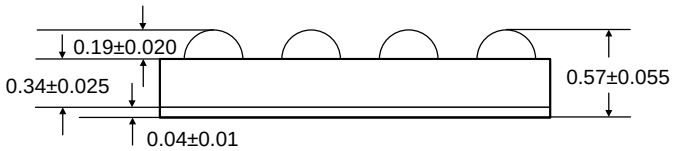

Side View

Unit: mm

13 RECOMMENDED LAND PATTERN

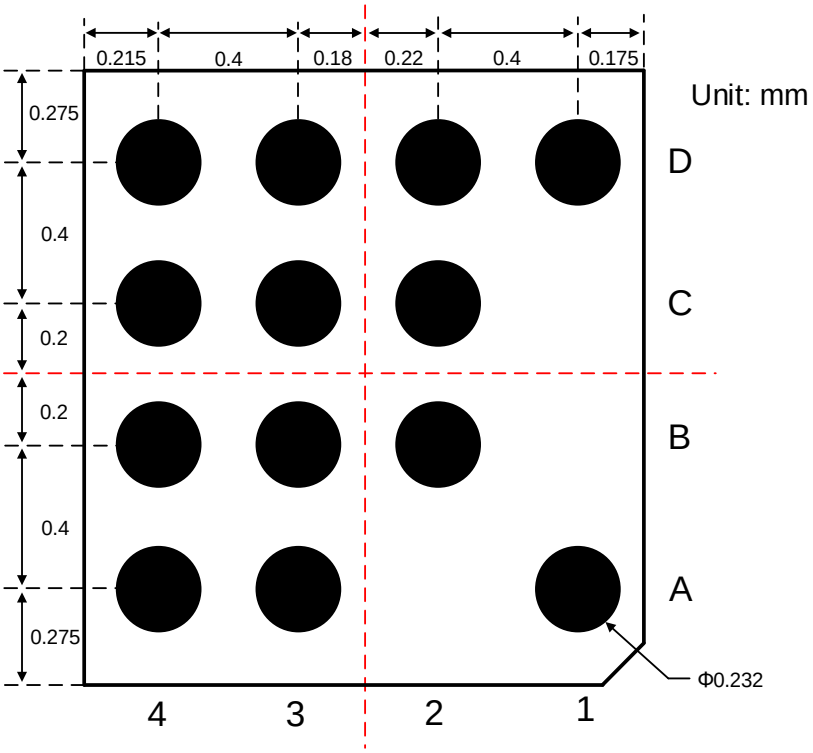

Copyright © 2016 SHANGHAI AWINIC TECHNOLOGY CO., LTD

14 REFLOW

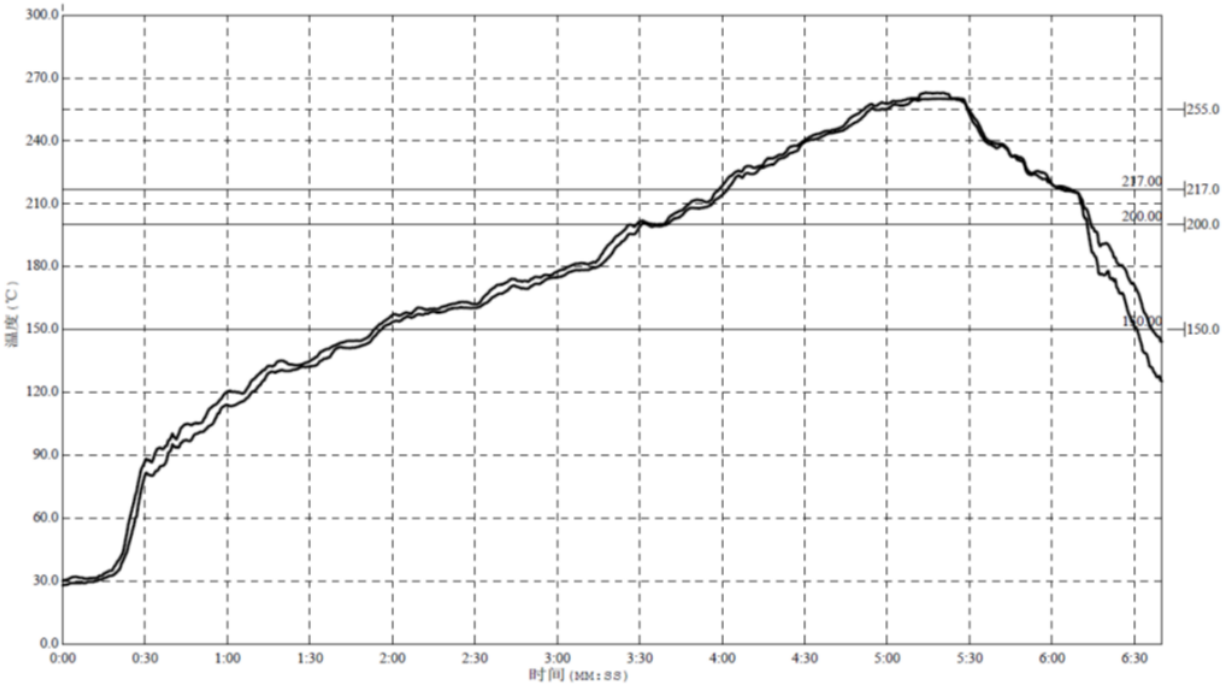

Reflow Note	Spec
Average ramp-up rate (217°C to peak)	Max. 3°C /sec
Time of Preheat temp. (from 150°C to 200°C)	60-120sec
Time to be maintained above 217°C	60-150sec
Peak Temperature	>260°C
Time within 5°C of actual peak temp	20-40sec
Ramp-down rate	Max. 6°C /sec
Time from 25°C to peak temp	Max. 8min

Package Reflow Standard Profile

NOTE 1: All data are compared with the package-top temperature, measured on the package surface;

NOTE 2: AW9203 adopted the Pb-Free assembly.

 Copyright © 2016 SHANGHAI AWINIC TECHNOLOGY CO., LTD

15 REVISION HISTORY

Vision	Date	Change Record
V1.0	Nov 2016	Officially Released
V1.1	Nov. 2017	Remove the Chinese description Update the ordering information
V1.2	June 2018	Update reflow information Update ordering information

Copyright © 2016 SHANGHAI AWINIC TECHNOLOGY CO., LTD

16 DISCLAIMER

Information in this document is believed to be accurate and reliable. However, Shanghai AWINIC Technology Co., Ltd (AWINIC Technology) does not give any representations or warranties, expressed or implied, as to the accuracy or completeness of such information and shall have no liability for the consequences of use of such information.

AWINIC Technology reserves the right to make changes to information published in this document, including without limitation specifications and product descriptions, at any time and without notice. Customers shall obtain the latest relevant information before placing orders and shall verify that such information is current and complete. This document supersedes and replaces all information supplied prior to the publication hereof.

AWINIC Technology products are not designed, authorized or warranted to be suitable for use in medical, military, aircraft, space or life support equipment, nor in applications where failure or malfunction of an AWINIC Technology product can reasonably be expected to result in personal injury, death or severe property or environmental damage. AWINIC Technology accepts no liability for inclusion and/or use of AWINIC Technology products in such equipment or applications and therefore such inclusion and/or use is at the customer's own risk.

Applications that are described herein for any of these products are for illustrative purposes only. AWINIC Technology makes no representation or warranty that such applications will be suitable for the specified use without further testing or modification.
All products are sold subject to the general terms and conditions of commercial sale supplied at the time of order acknowledgement.

Nothing in this document may be interpreted or construed as an offer to sell products that is open for acceptance or the grant, conveyance or implication of any license under any copyrights, patents or other industrial or intellectual property rights.

Reproduction of AWINIC information in AWINIC data books or data sheets is permissible only if reproduction is without alteration and is accompanied by all associated warranties, conditions, limitations, and notices. AWINIC is not responsible or liable for such altered documentation. Information of third parties may be subject to additional restrictions.

Resale of AWINIC components or services with statements different from or beyond the parameters stated by AWINIC for that component or service voids all express and any implied warranties for the associated AWINIC component or service and is an unfair and deceptive business practice. AWINIC is not responsible or liable for any such statements.

 Copyright © 2016 SHANGHAI AWINIC TECHNOLOGY CO., LTD