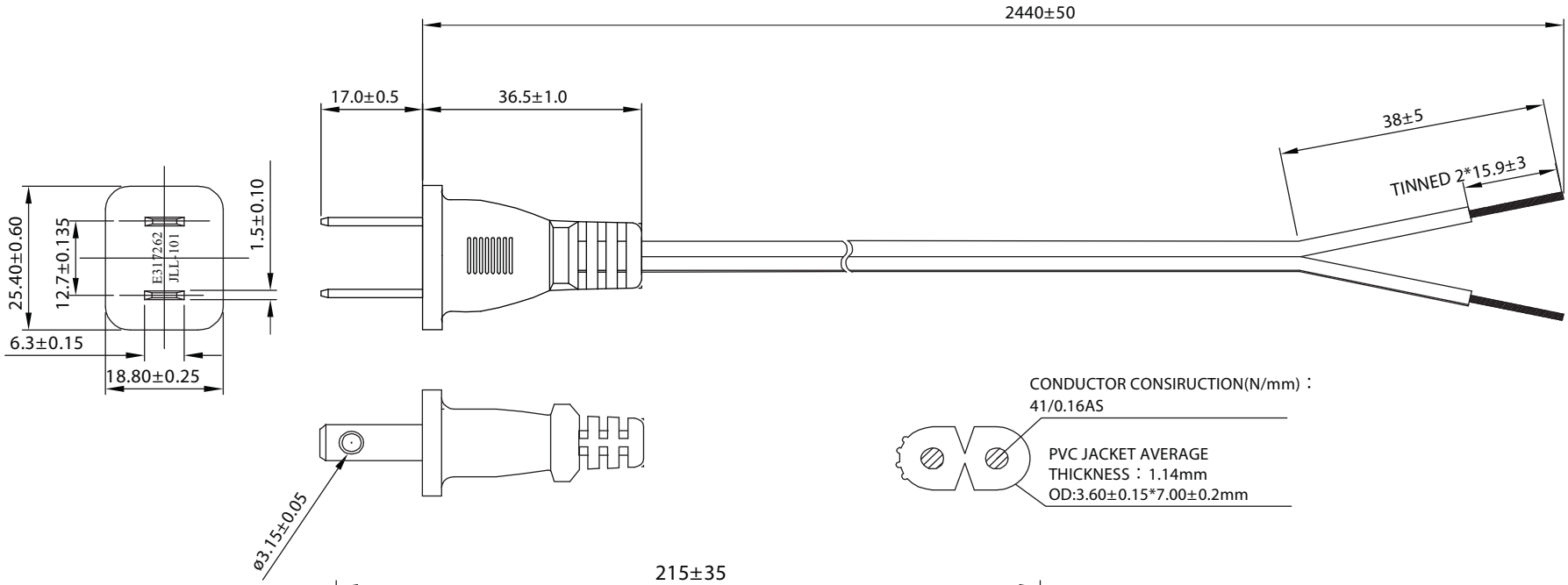


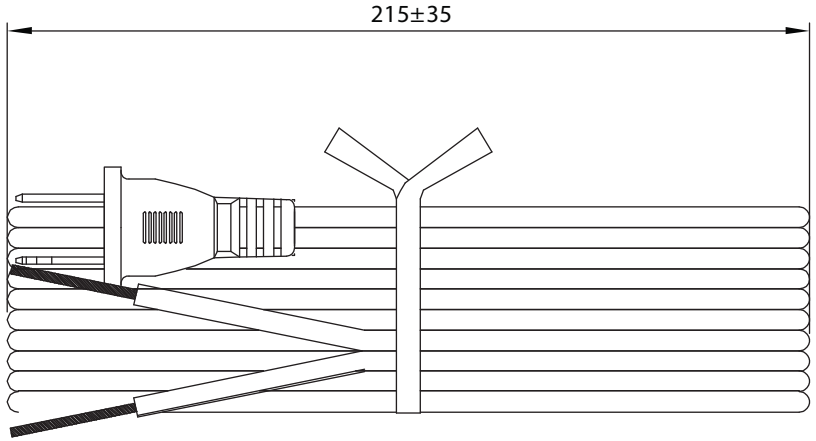


**Material:**

- E243711(UL) SPT-2 2 x 18AWG(0.824MM²)
  VW-1 60°C 300V
  - CSA 228191
- Jacket Color: Black

**Electrical:**

- 100% Open & Short Testing
- Insulation Resistance: 100MΩ (Min.)
- Voltage: 500V DC / 1 Min.

Unit: MM

| | |
|---|---|
| Scale | 1:1 |
| TOLERANCE | |
| X.X | ±0.40 |
| X.XX | ±0.25 |
| X.XXX | ±0.15 |
| Angle | ±3° |

| Modification | Date | Name |
|---|---|---|
| | | |

| | | Name |
|---|---|---|
| Drawn | 11.28.11 | Chappell |
| Approved | | |

Item No.

**AK500-OE-13-NP-8F-R**

Title

Power Cord -SPT-2/Open End,
Non-Polarized, Unshielded, 60°C, 8 Feet

Drawing No.

**rev00**

Replace

Sheet

RoHS Complaint

ASSMANN WSW components