- **Organization:**
  - **DRAM: 262144 Words × 16 Bits**
  - **SAM: 256 Words × 16 Bits**
- **Dual-Port Accessibility – Simultaneous and Asynchronous Access From the DRAM and SAM Ports**
- **Data-Transfer Function From the DRAM to the Serial-Data Register**
- **(4 × 4) × 4 Block-Write Feature for Fast Area-Fill Operations; as Many as Four Memory-Address Locations Written Per Cycle From the 16-Bit On-Chip Color Register**
- **Write-Per-Bit Feature for Selective Write to Each RAM I/O; Two Write-Per-Bit Modes to Simplify System Design**
- **Byte-Write Control ($\overline{WEL}$, $\overline{WEU}$) Provides Flexibility**
- **Extended Data Output (EDO) for Faster System Cycle Time**
- **Performance Ranges:**
- **Enhanced Page-Mode Operation for Faster Access**
- **$\overline{CAS}$-Before-$\overline{RAS}$ (CBR) and Hidden-Refresh Modes**
- **Long Refresh Period**
  Every 8 ms (Max)
- **Up to 45-MHz Uninterrupted Serial-Data Streams**
- **256 Selectable Serial-Register Starting Locations**
- **$\overline{SE}$-Controlled Register-Status QSF**
- **Split-Register-Transfer Read for Simplified Real-Time Register Load**
- **Programmable Split-Register Stop Point**
- **3-State Serial Outputs Allow Easy Multiplexing of Video-Data Streams**
- **All Inputs/Outputs and Clocks TTL-Compatible**
- **Compatible With JEDEC Standards**
- **Designed to Work With the Texas Instruments Graphics Family**

	ACCESS TIME ROW ENABLE $t_{a(R)}$ (MAX)	ACCESS TIME SERIAL DATA $t_{a(SQ)}$ (MAX)	DRAM CYCLE TIME $t_{c(W)}$ (MIN)	DRAM PAGE MODE $t_{c(P)}$ (MIN)	SERIAL CYCLE TIME $t_{c(SC)}$ (MIN)	OPERATING CURRENT SERIAL PORT STANDBY I_{CC1} (MAX)	OPERATING CURRENT SERIAL PORT ACTIVE I_{CC1A} (MAX)
SMJ55166-75	75 ns	23 ns	140 ns	48 ns	24 ns	165 mA	210 mA
SMJ55166-80	80 ns	25 ns	150 ns	50 ns	30 ns	160 mA	195 mA

description

The SMJ55166 multiport video RAM is a high-speed, dual-ported memory device. It consists of a dynamic random-access memory (DRAM) module organized as 262 144 words of 16 bits each that are interfaced to a serial-data register (serial-access memory [SAM]) organized as 256 words of 16 bits each. The SMJ55166 supports three basic types of operation: random access to and from the DRAM, serial access from the serial register, and transfer of data from any row in the DRAM to the serial register. Except during transfer operations, the SMJ55166 can be accessed simultaneously and asynchronously from the DRAM and SAM ports.

The SMJ55166 is equipped with several features designed to provide higher system-level bandwidth and to simplify design integration on both the DRAM and SAM ports. On the DRAM port, greater pixel draw rates are achieved by the (4 × 4) × 4 block-write feature of the device. The block-write mode allows 16 bits of data (present in an on-chip color-data register) to be written to any combination of four adjacent column-address locations. As many as 64 bits of data can be written to memory during each $\overline{CAS}$ cycle time. Also on the DRAM port, a write mask or a write-per-bit feature allows masking of any combination of the 16 inputs/outputs on any write cycle. The persistent write-per-bit feature uses a mask register that, once loaded, can be used on subsequent write cycles without reloading. The SMJ55166 also offers byte control, which can be applied in write cycles, block-write cycles, load-write-mask-register cycles, and load-color-register cycles. The SMJ55166 also offers extended-data-output (EDO) mode, which is effective in both the page-mode and standard DRAM cycles.

Please be aware that an important notice concerning availability, standard warranty, and use in critical applications of Texas Instruments semiconductor products and disclaimers thereto appears at the end of this data sheet.

PRODUCTION DATA information is current as of publication date. Products conform to specifications per the terms of Texas Instruments standard warranty. Production processing does not necessarily include testing of all parameters.

Copyright © 1997, Texas Instruments Incorporated

HKC PACKAGE
(TOP VIEW)

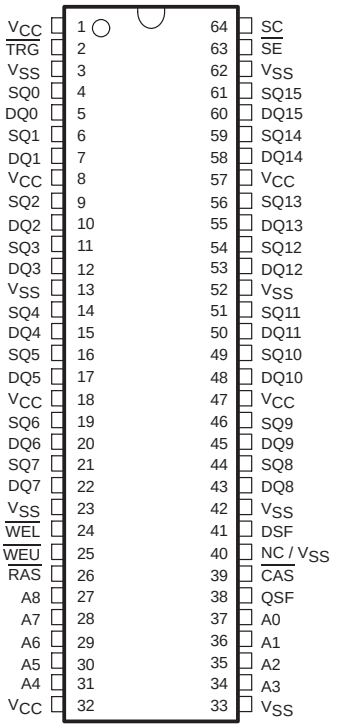

TERMINAL NOMENCLATURE	
A0 – A8	Address Inputs
CAS	Column-Address Strobe
DQ0 – DQ15	DRAM-Data I/O, Write-Mask Data
DSF	Special-Function Select
NC/V_{SS}	No Connect / Ground (Important: Not connected internally to V_{SS})
QSF	Special-Function Output
RAS	Row-Address Strobe
SC	Serial Clock
SE	Serial Enable
SQ0 – SQ15	Serial-Data Output
TRG	Output Enable, Transfer Select
V_{CC}	5-V Supply (TYP)
V_{SS}	Ground
WEL, WEU	DRAM Byte-Write-Enable Selects

GB PACKAGE
(BOTTOM VIEW)

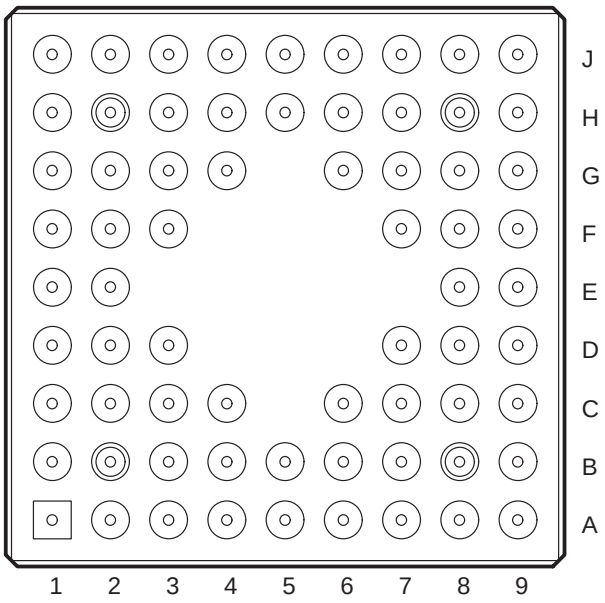

GB Package Terminal Assignments — By Location

PIN NO.	PIN NAME	PIN NO.	PIN NAME	PIN NO.	PIN NAME	PIN NO.	PIN NAME	PIN NO.	PIN NAME	PIN NO.	PIN NAME	PIN NO.	PIN NAME	PIN NO.	PIN NAME	PIN NO.	PIN NAME
J1	DQ1	J2	SQ3	J3	DQ3	J4	DQ4	J5	DQ5	J6	DQ6	J7	SQ7	J8	$\overline{WEL}$	J9	A8
H1	DQ0	H2	SQ2	H3	DQ2	H4	SQ4	H5	SQ5	H6	SQ6	H7	DQ7	H8	$\overline{WEU}$	H9	A7
G1	SQ0	G2	SQ1	G3	V_{CC2}	G4	V_{SS2}			G6	V_{CC2}	G7	V_{SS2}	G8	$\overline{RAS}$	G9	A6
F1	$\overline{TRG}$	F2	V_{SS1}	F3	V_{CC1}							F7	V_{CC1}	F8	V_{CC1}	F9	A5
E1	SC	E2	V_{CC1}											E8	V_{SS1}	E9	A4
D1	$\overline{SE}$	D2	V_{SS1}	D3	V_{CC1}							D7	V_{SS1}	D8	A3	D9	A2
C1	SQ15	C2	V_{SS1}	C3	V_{CC2}	C4	V_{SS2}			C6	V_{CC2}	C7	V_{SS2}	C8	$\overline{CAS}$	C9	A1
B1	DQ15	B2	DQ14	B3	DQ13	B4	DQ12	B5	DQ11	B6	DQ10	B7	SQ8	B8	DSF	B9	A0
A1	SQ14	A2	SQ13	A3	SQ12	A4	SQ11	A5	SQ10	A6	SQ9	A7	DQ9	A8	DQ8	A9	QSF

GB Package Terminal Assignments — By Signals

PIN NAME	PIN NO.	PIN NAME	PIN NO.	PIN NAME	PIN NO.	PIN NAME	PIN NO.	PIN NAME	PIN NO.	PIN NAME	PIN NO.
A0	B9	DQ2	H3	DQ13	B3	SQ3	J2	SQ14	A1	V_{CC2}	C6
A1	C9	DQ3	J3	DQ14	B2	SQ4	H4	SQ15	C1	V_{SS1}	F2
A2	D9	DQ4	J4	DQ15	B1	SQ5	H5	$\overline{TRG}$	F1	V_{SS1}	D2
A3	D8	DQ5	J5	DSF	B8	SQ6	H6	V_{CC1}	E2	V_{SS1}	C2
A4	E9	DQ6	J6	QSF	A9	SQ7	J7	V_{CC1}	F3	V_{SS1}	D7
A5	F9	DQ7	H7	$\overline{RAS}$	G8	SQ8	B7	V_{CC1}	D3	V_{SS1}	E8
A6	G9	DQ8	A8	SC	E1	SQ9	A6	V_{CC1}	F7	V_{SS2}	G4
A7	H9	DQ9	A7	$\overline{SE}$	D1	SQ10	A5	V_{CC1}	F8	V_{SS2}	C4
A8	J9	DQ10	B6	SQ0	G1	SQ11	A4	V_{CC2}	G3	V_{SS2}	G7
$\overline{CAS}$	C8	DQ11	B5	SQ1	G2	SQ12	A3	V_{CC2}	C3	V_{SS2}	C7
DQ0	H1	DQ12	B4	SQ2	H2	SQ13	A2	V_{CC2}	G6	$\overline{WEL}$	J8
DQ1	J1									$\overline{WEU}$	H8

description (continued)

The SMJ55166 offers a split-register-transfer read (DRAM to SAM) feature for the serial register (SAM port) that enables real-time register-load implementation for truly continuous serial-data streams without critical timing requirements. The register is divided into a high half and a low half. While one half is being read out of the SAM port, the other half can be loaded from the memory array. For applications not requiring real-time register load (for example, loads done during CRT-retrace periods), the full-register mode of operation is retained to simplify system design.

The SAM port is designed for maximum performance, enabling data to be accessed from the SAM at serial rates up to 45 MHz. During the split-register-transfer read operations, internal circuitry detects when the last bit position is accessed from the active half of the register and immediately transfers control to the opposite half. A separate output, QSF, is included to indicate which half of the serial register is active.

All inputs, outputs, and clock signals on the SMJ55166 are compatible with Series 54 TTL. All address lines and data-in lines are latched on-chip to simplify system design. All data-out lines are unlatched to allow greater system flexibility.

The SMJ55166 is offered in a 68-pin ceramic pin-grid-array package (GB suffix) and a 64-pin ceramic flatpack (HKC suffix).

The SMJ55166 and other TI multiport video RAMs are supported by a broad line of graphics processors and control devices from TI. Table 1 is a combination of Table 3 and Table 4, showing the DRAM and SAM functions with the terminal signal levels. Table 2 shows the relationship between terminal descriptions and operational modes.

functional block diagram

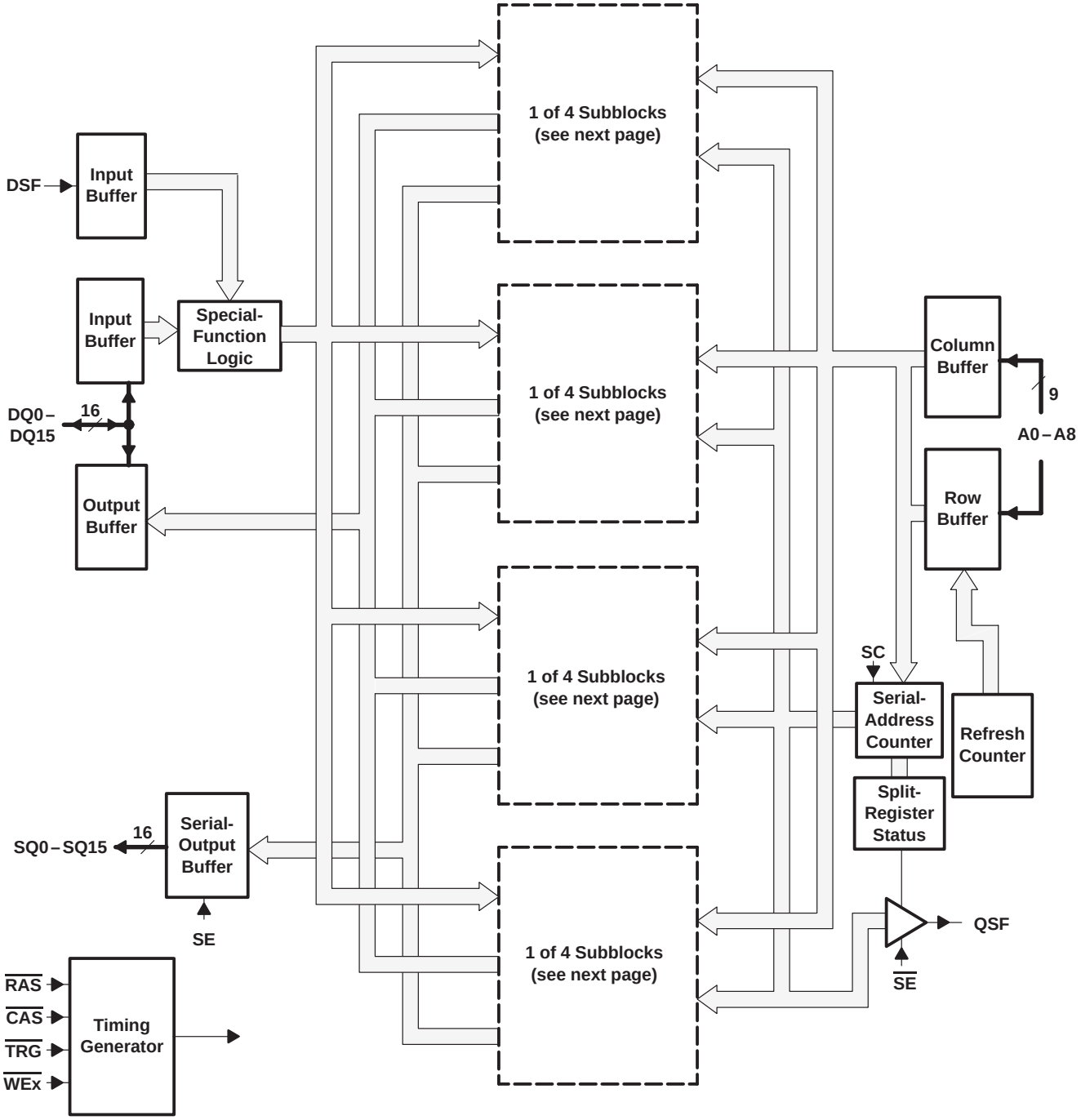

functional block diagram (continued)

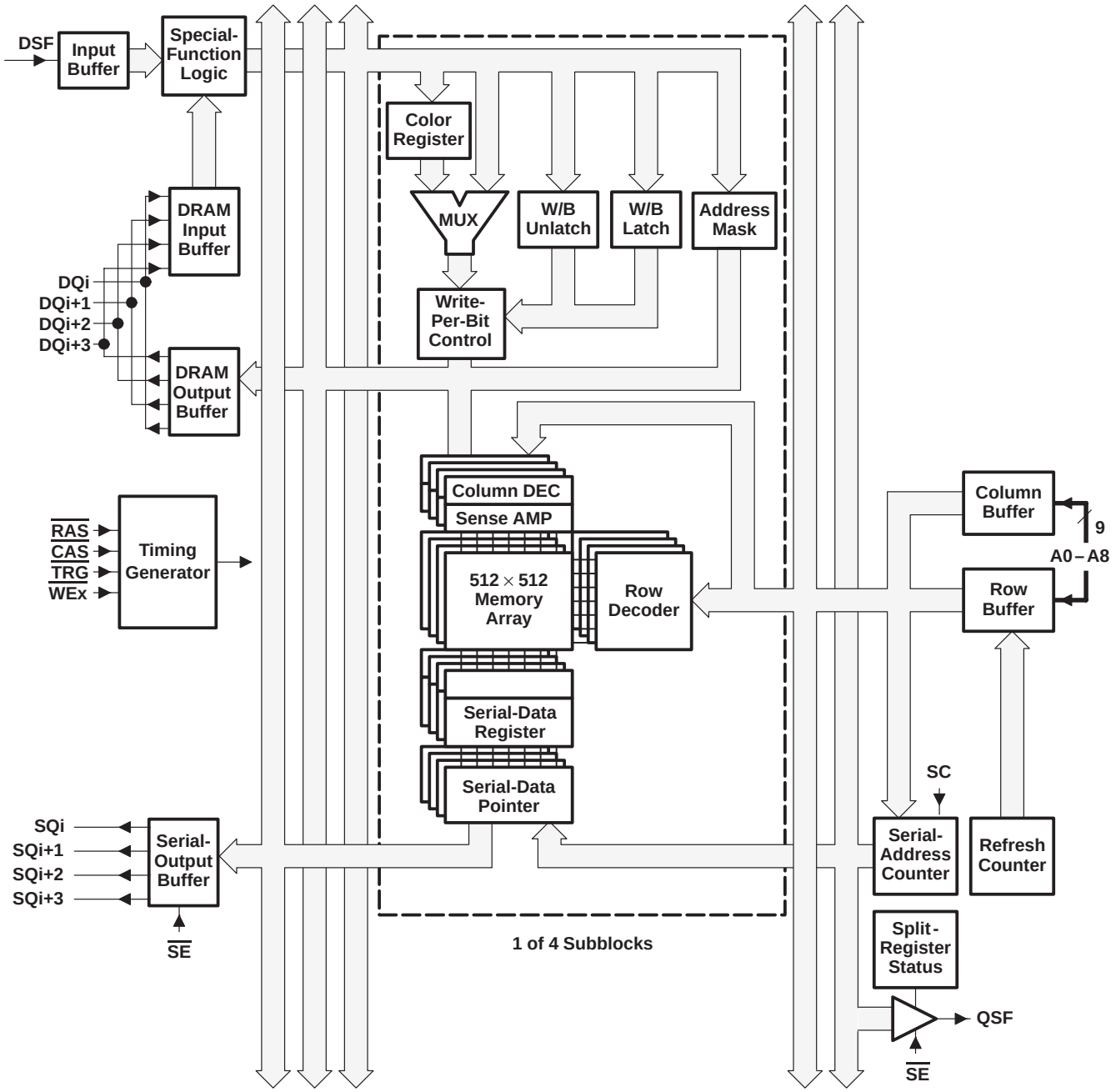

operation

Table 1. DRAM and SAM Function Table

FUNCTION	$\overline{RAS}$ FALL				$\overline{CAS}$ FALL	ADDRESS		DQ0 – DQ15 †		MNE CODE
	$\overline{CAS}$	$\overline{TRG}$	$\overline{WEx}$ ‡	DSF	DSF	$\overline{RAS}$	$\overline{CAS}$ §	$\overline{RAS}$	$\overline{WEL}$ $\overline{WEU}$ $\overline{CAS}$	
Reserved (do not use)	L	L	L	L	X	X	X	X	X	—
CBR refresh (no reset) and stop-point set (CBRS) ¶	L	X	L	H	X	Stop Point #	X	X	X	CBRS
CBR refresh (option reset) ‖	L	X	H	L	X	X	X	X	X	CBR
CBR refresh (no reset) ☆	L	X	H	H	X	X	X	X	X	CBRN
Full-register-transfer read	H	L	H	L	X	Row Address	Tap Point	X	X	RT
Split-register-transfer read	H	L	H	H	X	Row Address	Tap Point	X	X	SRT
DRAM write (nonpersistent write-per-bit)	H	H	L	L	L	Row Address	Column Address	Write Mask	Valid Data	RWM
DRAM block write (nonpersistent write-per-bit)	H	H	L	L	H	Row Address	Block Address A2 – A8	Write Mask	Column Mask	BWM
DRAM write (persistent write-per-bit)	H	H	L	L	L	Row Address	Column Address	X	Valid Data	RWM
DRAM block write (persistent write-per-bit)	H	H	L	L	H	Row Address	Block Address A2 – A8	X	Column Mask	BWM
DRAM write (nonmasked)	H	H	H	L	L	Row Address	Column Address	X	Valid Data	RW
DRAM block write (nonmasked)	H	H	H	L	H	Row Address	Block Address A2 – A8	X	Column Mask	BW
Load write-mask register □	H	H	H	H	L	Refresh Address	X	X	Write Mask	LMR
Load color register	H	H	H	H	H	Refresh Address	X	X	Color Data	LCR

Legend:
Col Mask = H: Write to address/column enabled
Write Mask = H: Write to I/O enabled
X = Don't care

† DQ0 – DQ15 are latched on either the first falling edge of $\overline{WEx}$ or the falling edge of $\overline{CAS}$, whichever occurs later.
‡ Logic L is selected when either or both $\overline{WEL}$ and $\overline{WEU}$ are low.
§ The column address and block address are latched on the first falling edge of $\overline{CAS}$.
¶ CBRS cycle should be performed immediately after the power-up initialization cycle.
# A0 – A3, A8: don't care; A4 – A7 : stop-point code
‖ CBR refresh (option reset) mode ends persistent write-per-bit mode and stop-point mode.
☆ CBR refresh (no reset) mode does not end persistent write-per-bit mode or stop-point mode.
□ Load write-mask-register cycle sets the persistent write-per-bit mode. The persistent write-per-bit mode is reset only by the CBR (option reset) cycle.

operation (continued)

Table 2. Terminal Description Versus Operational Mode

PIN	DRAM	TRANSFER	SAM
A0–A8	Row, column address	Row address, tap point	
$\overline{CAS}$	Column-address strobe, DQ output enable	Tap-address strobe	
DQ	DRAM data I/O, write mask		
DSF	Block-write enable Write-mask-register load enable Color-register load enable CBR (option reset)	Split-register-transfer enable	
$\overline{RAS}$	Row-address strobe	Row-address strobe	
$\overline{SE}$			SQ output enable, QSF output enable
SC			Serial clock
SQ			Serial-data output
$\overline{TRG}$	DQ output enable	Transfer enable	
$\overline{WEL}$ $\overline{WEU}$	Write enable, write-per-bit enable		
QSF			Serial-register status
NC/V_{SS}	Either make no external connection or tie to system V_{SS}		
V_{CC}†	5-V supply		
V_{SS}†	Ground		

† For proper device operation, all V_{CC} pins must be connected to a 5-V supply and all V_{SS} pins must be tied to ground.

terminal definitions

address (A0–A8)

Eighteen address bits are required to decode each of the 262144 storage cell locations. Nine row-address bits are set up on pins A0–A8 and latched onto the chip on the falling edge of $\overline{RAS}$. Nine column-address bits are set up on pins A0–A8 and latched onto the chip on the falling edge of $\overline{CAS}$. All addresses must be stable on or before the falling edge of $\overline{RAS}$ and the falling edge of $\overline{CAS}$.

During the full-register-transfer read operation, the states of A0–A8 are latched on the falling edge of $\overline{RAS}$ to select one of the 512 rows where the transfer occurs. At the falling edge of $\overline{CAS}$, the column-address bits A0–A8 are latched. The most significant column-address bit (A8) selects which half of the row is transferred to the SAM. The appropriate 8-bit column address (A0–A7) selects one of 256 tap points (starting positions) for the serial-data output.

During the split-register-transfer read operation, address bit A7 is ignored at the falling edge of $\overline{CAS}$. An internal counter selects which half of the register is used. If the high half of the SAM is currently in use, the low half of the SAM is loaded with the low half of the DRAM half row and vice versa. Column address (A8) selects the DRAM half row. The remaining seven address bits (A0–A6) are used to select each of the 127 possible starting locations within the SAM. Locations 127 and 255 are not valid tap points.

row-address strobe ($\overline{RAS}$)

$\overline{RAS}$ is similar to a chip enable so that all DRAM cycles and transfer cycles are initiated by the falling edge of $\overline{RAS}$. $\overline{RAS}$ is a control input that latches the states of the row address, $\overline{WEL}$, $\overline{WEU}$, $\overline{TRG}$, $\overline{CAS}$, and DSF onto the chip to invoke DRAM and transfer functions of the SMJ55166.

column-address strobe ($\overline{CAS}$)

$\overline{CAS}$ is a control input that latches the states of the column address and DSF to control DRAM and transfer functions of the SMJ55166. $\overline{CAS}$ also acts as output enable for the DRAM output pins DQ0–DQ15. During transfer operations, address bits A0–A8 are latched at the falling edge of $\overline{CAS}$ as the start position (tap) for the serial-data output (SQ0–SQ15).

output enable/transfer select ($\overline{TRG}$)

$\overline{TRG}$ selects either DRAM or transfer operation as $\overline{RAS}$ falls. For DRAM operation, $\overline{TRG}$ must be held high as $\overline{RAS}$ falls. During DRAM operation, $\overline{TRG}$ functions as an output enable for the DRAM output pins DQ0–DQ15. For transfer operation, $\overline{TRG}$ must be brought low before $\overline{RAS}$ falls.

write-mask select, write enable ($\overline{WEL}$, $\overline{WEU}$)

In DRAM operation, $\overline{WEL}$ enables data to be written to the lower byte (DQ0–DQ7) and $\overline{WEU}$ enables data to be written to the upper byte (DQ8–DQ15) of the DRAM. Both $\overline{WEL}$ and $\overline{WEU}$ have to be held high together to select the read mode. Bringing either or both $\overline{WEL}$ and $\overline{WEU}$ low selects the write mode. $\overline{WEL}$ and $\overline{WEU}$ are also used to select the DRAM write-per-bit mode. Holding either or both $\overline{WEL}$ and $\overline{WEU}$ low on the falling edge of $\overline{RAS}$ invokes the write-per-bit operation. The SMJ55166 supports both the nonpersistent write-per-bit mode and the persistent write-per-bit mode.

special-function select (DSF)

The DSF input is latched on the falling edge of $\overline{RAS}$ or the first falling edge of $\overline{CAS}$, similar to an address. DSF determines which of the following functions is invoked on a particular cycle:

- CBR refresh with reset (CBR)
- CBR refresh with no reset (CBRN)
- CBR refresh with no reset and stop-point set (CBRS)
- Block write (BW)
- Load write-mask register (LMR) loading for the persistent write-per-bit mode
- Load color register (LCR) for the block-write mode
- Split-register-transfer (SRT) read

DRAM-data I/O, write-mask data (DQ0–DQ15)

DRAM data is written or read through the common I/O DQ pins. The 3-state DQ-output buffers provide direct TTL compatibility (no pullup resistors) with a fanout of one Series 54 TTL load. Data out is the same polarity as data in. The outputs are in the high-impedance (floating) state as long as either $\overline{TRG}$ or $\overline{CAS}$ is held high. Data does not appear at the outputs until after both $\overline{CAS}$ and $\overline{TRG}$ have been brought low. The write mask is latched into the device through the random DQ pins by the falling edge of $\overline{RAS}$ and is used on all write-per-bit cycles. In a transfer operation, the DQ outputs remain in the high-impedance state for the entire cycle.

serial-data outputs (SQ0–SQ15)

Serial data is read from SQ. SQ output buffers provide direct TTL compatibility (no pullup resistors) with a fanout of one Series 54 TTL load. The serial outputs are in the high-impedance (floating) state while the serial-enable pin, $\overline{SE}$, is high. The serial outputs are enabled when $\overline{SE}$ is brought low.

serial clock (SC)

Serial data is accessed out of the data register from the rising edge of SC. The SMJ55166 is designed to work with a wide range of clock duty cycles to simplify system design. There is no refresh requirement because the data registers that comprise the SAM are static. There is also no minimum SC clock operating frequency.

serial enable ($\overline{SE}$)

During serial-access operations, $\overline{SE}$ enables/disables the SQ outputs. $\overline{SE}$ low enables the serial-data output while $\overline{SE}$ high disables the serial-data output. $\overline{SE}$ is also used as an enable/disable for output pin QSF.

> **NOTE:** While $\overline{SE}$ is held high, the serial clock is not disabled. External SC pulses increment the internal serial-address counter, regardless of the state of $\overline{SE}$. This ungated serial-clock scheme minimizes access time of serial output from $\overline{SE}$ low because the serial-clock input buffer and the serial-address counter are not disabled by $\overline{SE}$.

special-function output (QSF)

QSF is an output pin that indicates which half of the SAM is being accessed. When QSF is low, the serial-address pointer accesses the lower (least significant) 128 bits of the SAM. When QSF is high, the pointer accesses the higher (most significant) 128 bits of the SAM. QSF changes state upon crossing a boundary between the two SAM halves.

During full-register-transfer operations, QSF can change state upon completing the cycle. This state is determined by the tap point loaded during the transfer cycle. QSF output is enabled by $\overline{SE}$. If $\overline{SE}$ is high, the QSF output is in the high-impedance state.

no connect/ground (NC/V_{SS})

NC/V_{SS} must be tied to system ground or left floating for proper device operation.

functional operation description

Table 3. DRAM Function Table

FUNCTION	$\overline{RAS}$ FALL				$\overline{CAS}$ FALL	ADDRESS		DQ0 – DQ15†		MNE CODE
	$\overline{CAS}$	$\overline{TRG}$	$\overline{WEx}$‡	DSF	DSF	$\overline{RAS}$	$\overline{CAS}$§	$\overline{RAS}$	$\overline{WEL}$ $\overline{WEU}$ $\overline{CAS}$	
Reserved (do not use)	L	L	L	L	X	X	X	X	X	—
CBR refresh (no reset) and stop-point set (CBRS)¶	L	X	L	H	X	Stop Point#	X	X	X	CBRS
CBR refresh (option reset)‖	L	X	H	L	X	X	X	X	X	CBR
CBR refresh (no reset)☆	L	X	H	H	X	X	X	X	X	CBRN
DRAM write (nonpersistent write-per-bit)	H	H	L	L	L	Row Address	Column Address	Write Mask	Valid Data	RWM
DRAM block write (nonpersistent write-per-bit)	H	H	L	L	H	Row Address	Block Address A2 – A8	Write Mask	Column Mask	BWM
DRAM write (persistent write-per-bit)	H	H	L	L	L	Row Address	Column Address	X	Valid Data	RWM
DRAM block write (persistent write-per-bit)	H	H	L	L	H	Row Address	Block Address A2 – A8	X	Column Mask	BWM
DRAM write (nonmasked)	H	H	H	L	L	Row Address	Column Address	X	Valid Data	RW
DRAM block write (nonmasked)	H	H	H	L	H	Row Address	Block Address A2 – A8	X	Column Mask	BW
Load write-mask register □	H	H	H	H	L	Refresh Address	X	X	Write Mask	LMR
Load color register	H	H	H	H	H	Refresh Address	X	X	Color Data	LCR

Legend:
Col Mask = H: Write to address/column enabled
Write Mask = H: Write to I/O enabled
X = Don't care

† DQ0 – DQ15 are latched on either the first falling edge of $\overline{WEx}$ or the falling edge of $\overline{CAS}$, whichever occurs later.
‡ Logic L is selected when either or both $\overline{WEL}$ and $\overline{WEU}$ are low.
§ The column address and block address are latched on the first falling edge of $\overline{CAS}$.
¶ CBRS cycle should be performed immediately after the power-up initialization cycle.
# A0 – A3, A8: don't care; A4 – A7 : stop-point code
‖ $\overline{CBR}$ refresh (option reset) mode ends persistent write-per-bit mode and stop-point mode.
☆ $\overline{CBR}$ refresh (no reset) mode does not end persistent write-per-bit mode or stop-point mode.
□ Load-write-mask-register cycle sets the persistent write-per-bit mode. The persistent write-per-bit mode is reset only by the CBR (option reset) cycle.

enhanced page mode

Enhanced page-mode operation allows faster memory access by keeping the same row address while selecting random column addresses. This mode eliminates the time required for row-address setup, row-address hold, and address multiplex. The maximum $\overline{RAS}$ low time and $\overline{CAS}$-page-cycle time used determine the number of columns that can be accessed.

Unlike conventional page-mode operations, the enhanced page mode allows the SMJ55166 to operate at a higher data bandwidth. Data retrieval begins as soon as the column address is valid rather than when $\overline{CAS}$ transitions low. A valid column address can be presented immediately after the row-address hold time has been satisfied, usually well in advance of the falling edge of $\overline{CAS}$. In this case, data is obtained after $t_{a(C)}$ max (access time from $\overline{CAS}$ low) if $t_{a(CA)}$ max (access time from column address) has been satisfied.

refresh

$\overline{CAS}$-before-$\overline{RAS}$ (CBR) refresh

CBR refreshes are accomplished by bringing $\overline{CAS}$ low earlier than $\overline{RAS}$. The external row address is ignored and the refresh row address is generated internally. Three types of CBR refresh cycles are available: the CBR refresh (option reset) which ends the persistent write-per-bit mode and the stop-point mode and the CBRN refresh and CBRS refresh (no reset), which do not end the persistent write-per-bit mode or the stop-point mode. The 512 rows of the DRAM do not necessarily need to be refreshed consecutively as long as the entire refresh is completed within the required time period, $t_{rf(MA)}$. The output buffers remain in the high-impedance state during the CBR refresh cycles regardless of the state of $\overline{TRG}$.

hidden refresh

A hidden refresh is accomplished by holding $\overline{CAS}$ low in the DRAM read cycle and cycling $\overline{RAS}$. The output data of the DRAM read cycle remains valid while the refresh is carried out. Like the CBR refresh, the refreshed row addresses are generated internally during the hidden refresh.

$\overline{RAS}$-only refresh

A $\overline{RAS}$-only refresh is accomplished by cycling $\overline{RAS}$ at every row address. Unless $\overline{CAS}$ and $\overline{TRG}$ are low, the output buffers remain in the high-impedance state to conserve power. Externally generated addresses must be supplied during $\overline{RAS}$-only refresh. Strobing each of the 512 row addresses with $\overline{RAS}$ causes all bits in each row to be refreshed.

extended data output

The SMJ55166 features extended-data output during DRAM accesses. While $\overline{RAS}$ and $\overline{TRG}$ are low, the DRAM output remains valid. The output remains valid even when $\overline{CAS}$ returns high (until $\overline{WEx}$ is low), $\overline{TRG}$ is high, or both $\overline{CAS}$ and $\overline{RAS}$ are high (see Figure 1 and Figure 2). The extended-data-output mode functions in all read cycles including DRAM read, page-mode read, and read-modify-write cycles (see Figure 3).

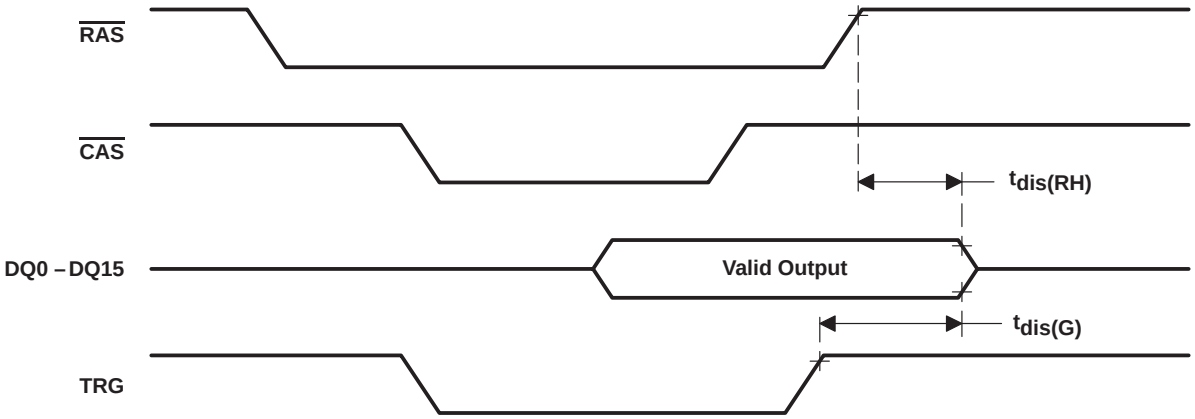

Figure 1. DRAM Read Cycle With $\overline{RAS}$-Controlled Output

extended data output (continued)

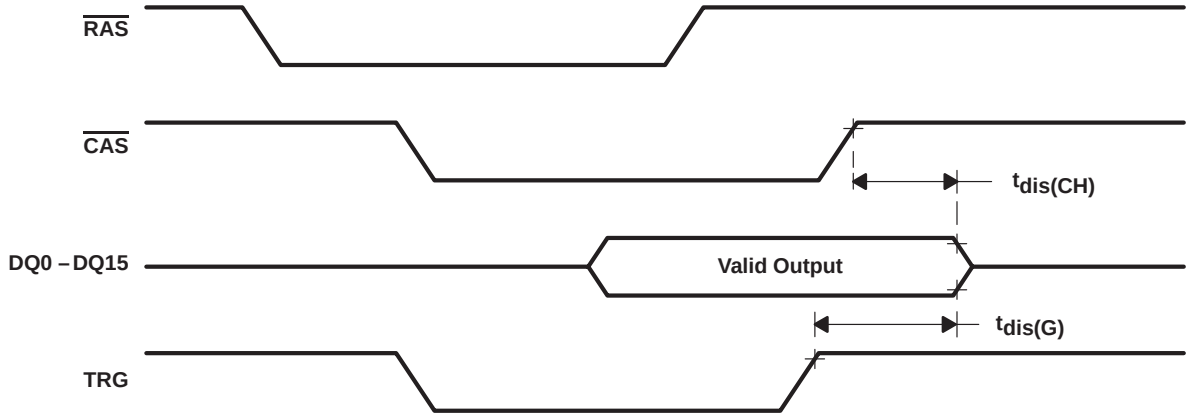

Figure 2. DRAM Read Cycle With $\overline{CAS}$-Controlled Output

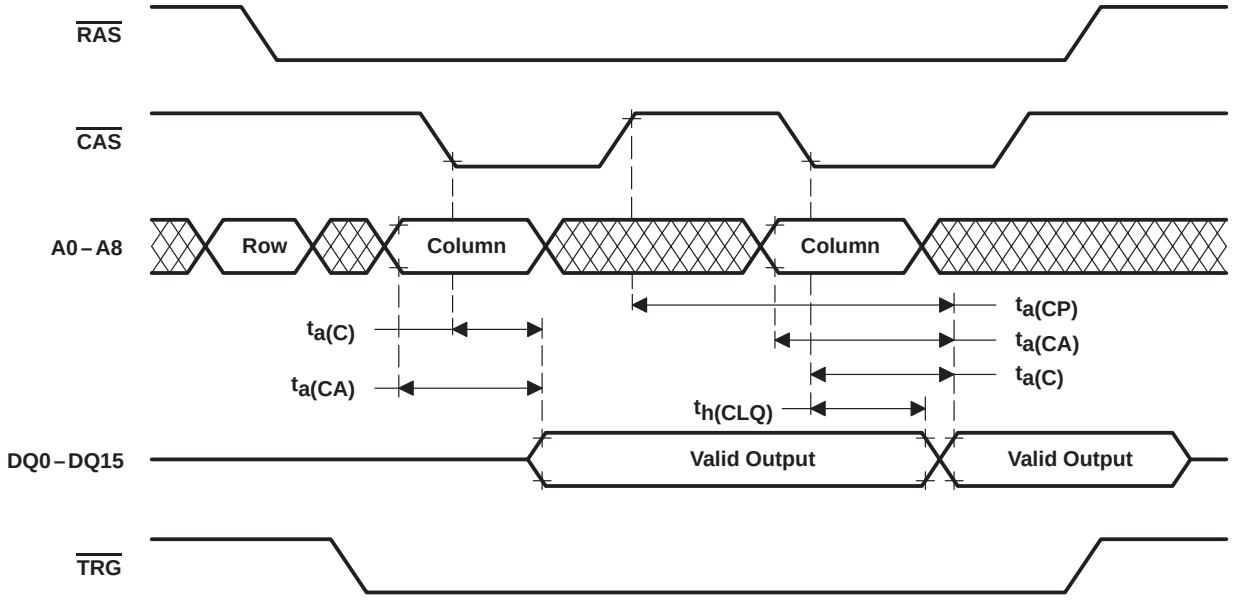

Figure 3. DRAM Page-Read Cycle With Extended Output

byte-write operation

Byte-write operations can be applied in DRAM-write cycles, block-write cycles, load-write-mask-register cycles, and load-color-register cycles. Holding either or both $\overline{WEL}$ and $\overline{WEU}$ low selects the write mode. In normal write cycles, $\overline{WEL}$ enables data to be written to the lower byte (DQ0–DQ7) and $\overline{WEU}$ enables data to be written to the upper byte (DQ8–DQ15). For early-write cycles, one $\overline{WEx}$ is brought low before $\overline{CAS}$ falls. The other $\overline{WEx}$ can be brought low before $\overline{CAS}$ falls or after $\overline{CAS}$ falls. The data is strobed in with data setup and hold times for DQ0–DQ15 referenced to $\overline{CAS}$ (see Figure 4).

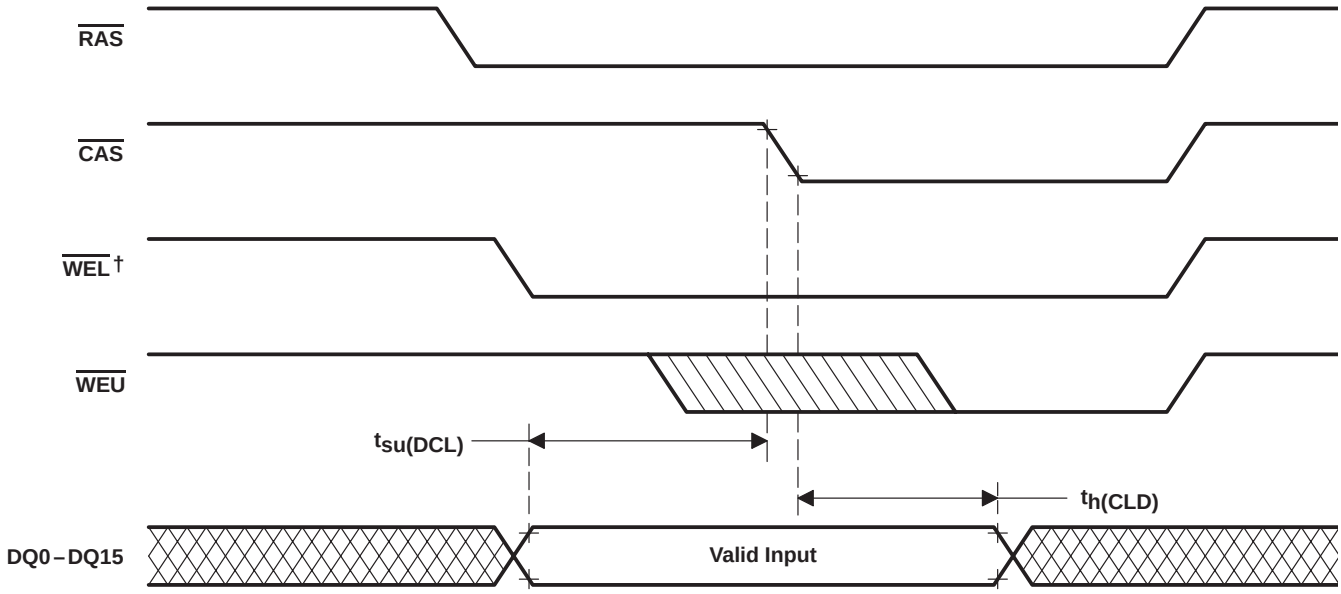

† Either $\overline{WEU}$ or $\overline{WEL}$ can be brought low prior to $\overline{CAS}$ to initiate an early-write cycle.

Figure 4. Example of an Early-Write Cycle

byte-write operation (continued)

For late-write or read-modify-write cycles, $\overline{WEL}$ and $\overline{WEU}$ are both held high before $\overline{CAS}$ falls. After $\overline{CAS}$ falls, either or both $\overline{WEL}$ and $\overline{WEU}$ are brought low to select the corresponding byte or bytes to be written. Data is strobed in by either or both $\overline{WEL}$ and $\overline{WEU}$ with data setup and hold times for DQ0–DQ15 referenced to whichever $\overline{WEx}$ falls earlier (see Figure 5).

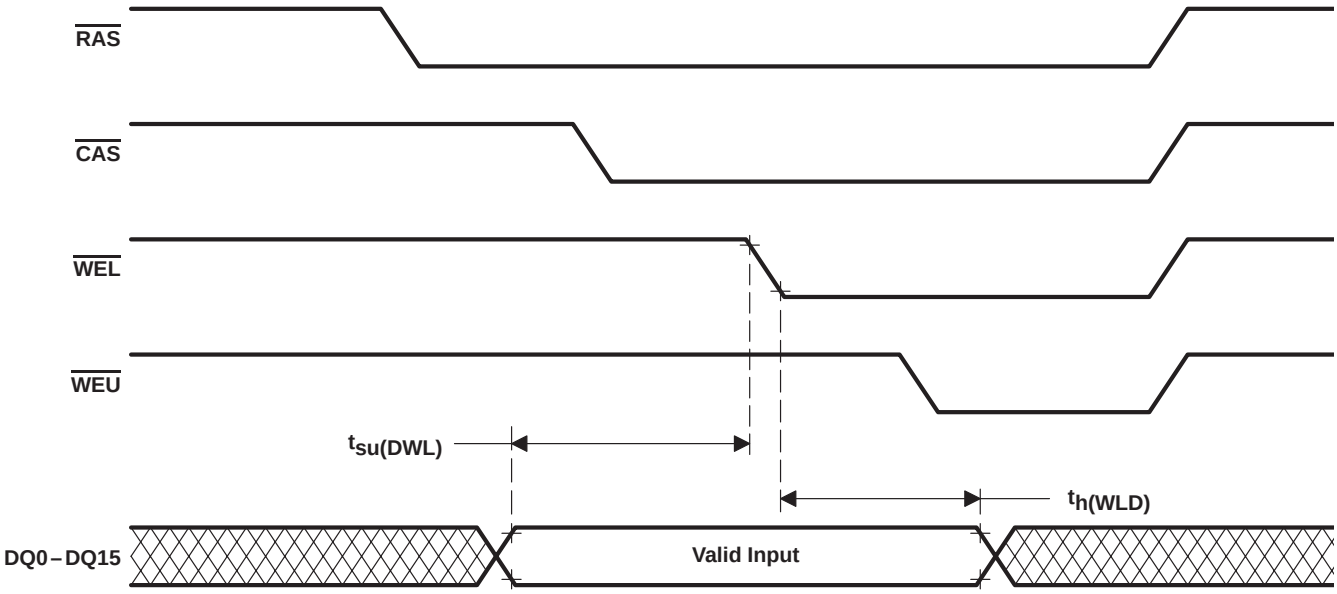

Figure 5. Example of a Late-Write Cycle

write-per-bit

The write-per-bit feature allows masking any combination of the 16 DQs on any write cycle. The write-per-bit operation is invoked when either $\overline{WEL}$ or $\overline{WEU}$ is held low on the falling edge of $\overline{RAS}$. Assertion of either individual $\overline{WEx}$ allows entry of the entire 16-bit mask on DQ0–DQ15. Byte control of the mask input is not allowed. If both $\overline{WEL}$ and $\overline{WEU}$ are held high on the falling edge of $\overline{RAS}$, the write operation is performed without any masking. The SMJ55166 offers two write-per-bit modes: nonpersistent write-per-bit and persistent write-per-bit.

nonpersistent write-per-bit

When either or both $\overline{WEL}$ and $\overline{WEU}$ are low on the falling edge of $\overline{RAS}$, the write mask is reloaded. A 16-bit binary code (the write-per-bit mask) is input to the device through the random DQ pins and latched on the falling edge of $\overline{RAS}$. The write-per-bit mask selects which of the 16 random I/Os are to be written and which are not. After $\overline{RAS}$ has latched the on-chip write-per-bit mask, input data is driven onto the DQ pins and is latched on either the first falling edge of $\overline{WEx}$ or the falling edge of $\overline{CAS}$, whichever occurs later. $\overline{WEL}$ enables the lower byte (DQ0–DQ7) to be written through the mask and $\overline{WEU}$ enables the upper byte (DQ8–DQ15) to be written through the mask. If a data low (write mask = 0) is strobed into a particular I/O pin on the falling edge of $\overline{RAS}$, data is not written to that I/O. If a data high (write mask = 1) is strobed into a particular I/O pin on the falling edge of $\overline{RAS}$, data is written to that I/O (see Figure 6).

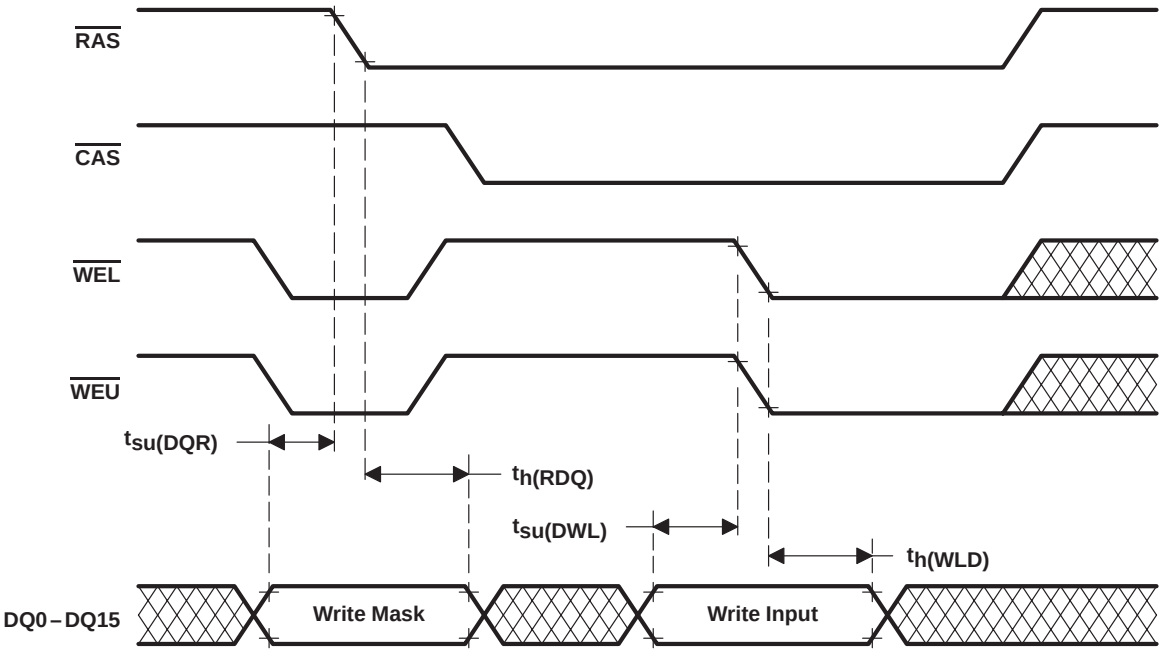

Figure 6. Example of a Nonpersistent Write-Per-Bit (Late-Write) Operation

persistent write-per-bit

The persistent write-per-bit mode is initiated by performing a load-write-mask-register (LMR) cycle. In the persistent write-per-bit mode, the write-per-bit mask is not overwritten but remains valid over an arbitrary number of write cycles until another LMR cycle is performed or power is removed.

The LMR cycle is performed using DRAM write-cycle timing with DSF held high on the falling edge of $\overline{RAS}$ and held low on the falling edge of $\overline{CAS}$. A binary code is input to the write-mask register via the random I/O pins and latched on either the first $\overline{WEx}$ falling edge or the falling edge of $\overline{CAS}$, whichever occurs later. Byte write control can be applied to the write mask during the LMR cycle. The persistent write-per-bit mode can then be used in exactly the same way as the nonpersistent write-per-bit mode except that the input data on the falling edge of $\overline{RAS}$ is ignored. When the device is set to the persistent write-per-bit mode, it remains in this mode and is reset only by a CBR refresh (option reset) cycle (see Figure 7).

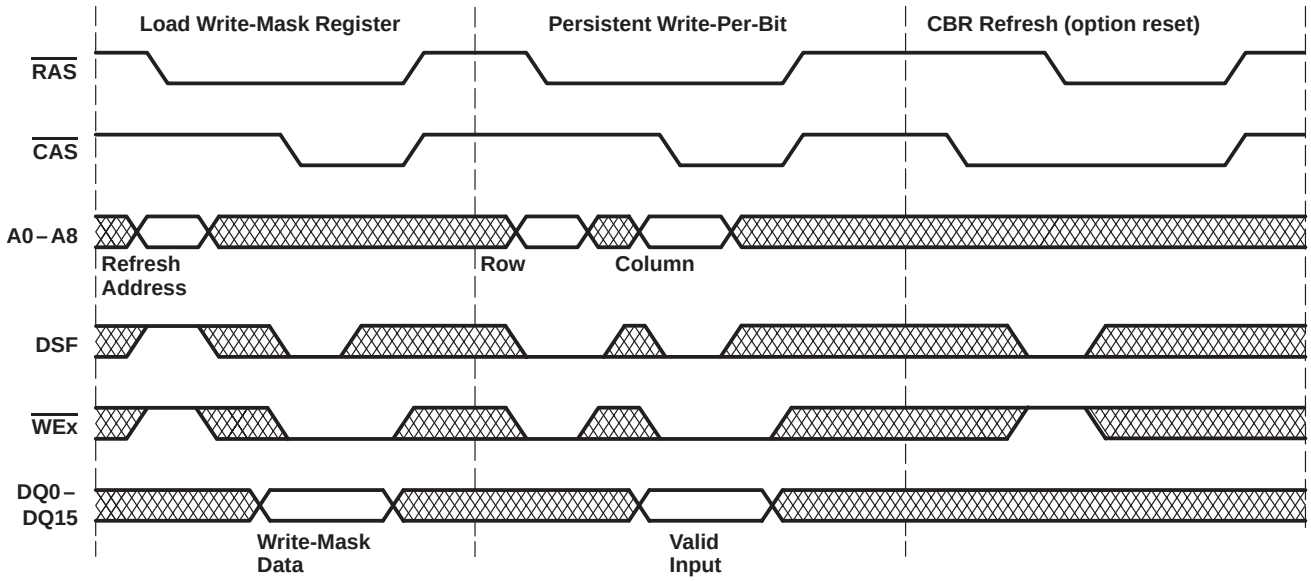

Mask Data = ... 1 : Write to I/O enabled
= 0 : Write to I/O disabled

Figure 7. Example of a Persistent Write-Per-Bit Operation

block write

The block-write feature allows up to 64 bits of data to be written simultaneously to one row of the memory array. This function is implemented as 4 columns × 4 DQs and repeated in four quadrants. In this manner, each of the four 1M-bit quadrants can have up to four consecutive columns written at a time with up to four DQs per column (see Figure 8).

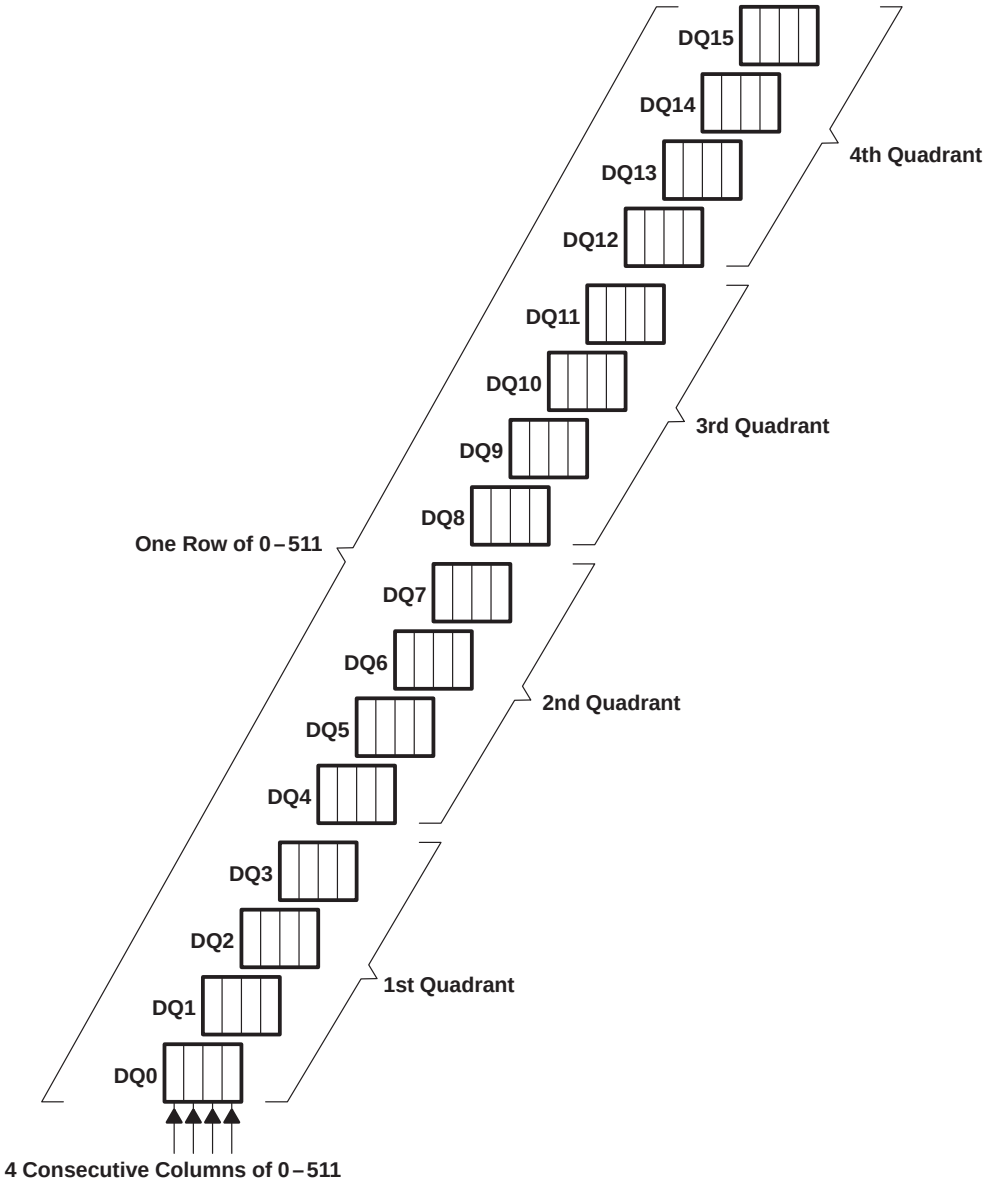

Figure 8. Block-Write Operation

Each 1M-bit quadrant has a 4-bit column mask to mask off and prevent any or all of the four columns from being written with data. Nonpersistent write-per-bit or persistent write-per-bit functions can be applied to the block-write operation to provide write-masking options. The DQ data is provided by four bits from the on-chip color register. Bits 0 – 3 from the 16-bit write-mask register, bits 0 – 3 from the 16-bit column-mask register, and bits 0 – 3 from the 16-bit color-data register configure the block write for the first quadrant, while bits 4 – 7, 8 – 11, and 12 – 15 of the corresponding registers control the other quadrants in a similar fashion (see Figure 9).

block write (continued)

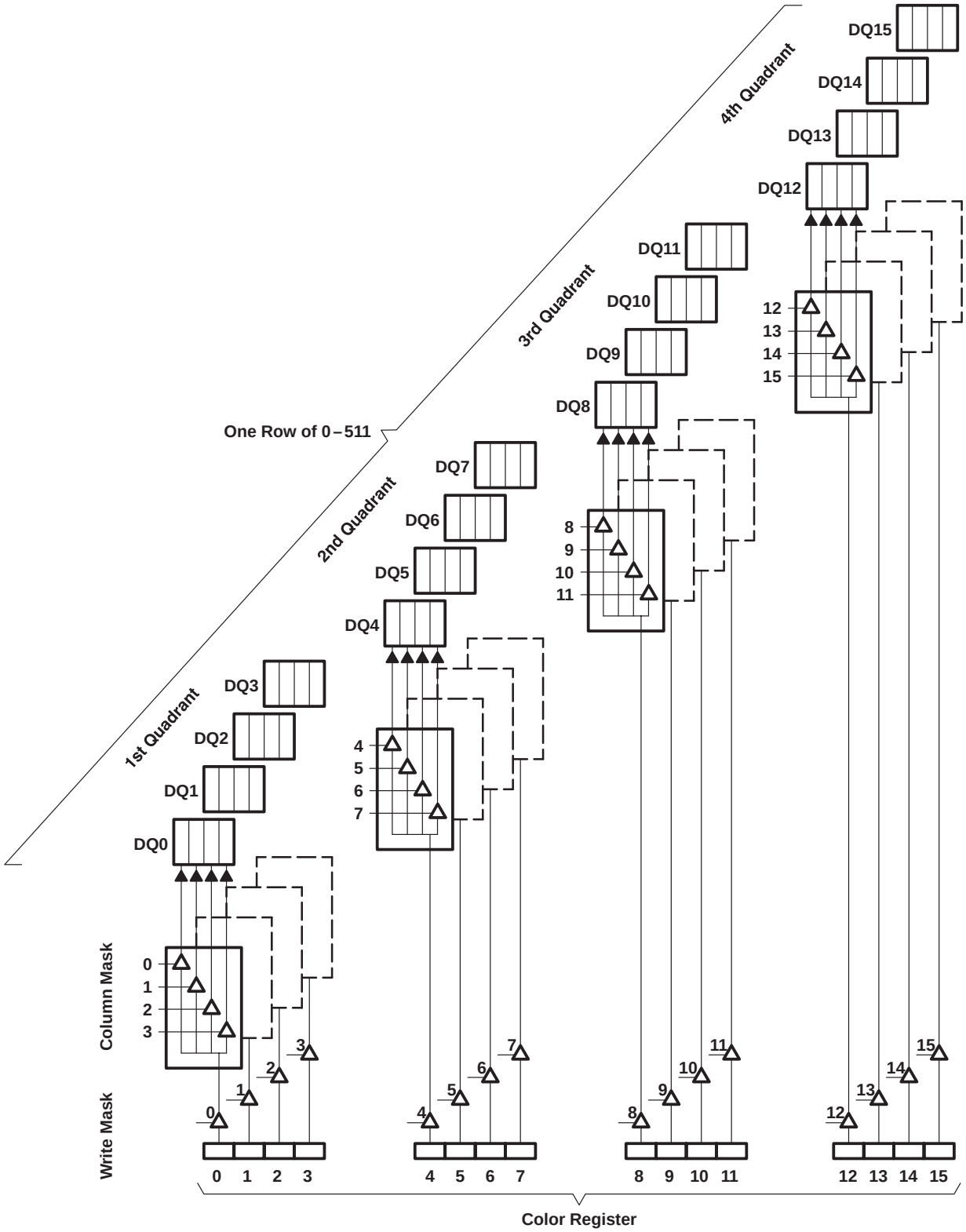

Figure 9. Block Write With Masks

block write (continued)

Every four columns make a block, which results in 128 blocks along one row. Block 0 comprises columns 0 – 3, block 1 comprises columns 4 – 7, block 2 comprises columns 8 – 11, and so forth, as shown in Figure 10.

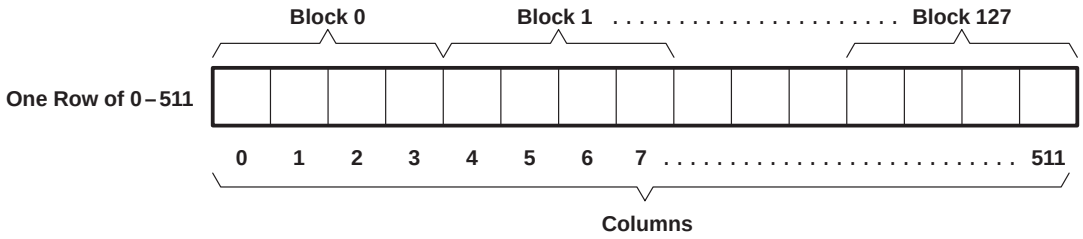

Figure 10. Block Columns Organization

During block-write cycles, only the seven most significant column addresses (A2 – A8) are latched on the falling edge of $\overline{CAS}$ to decode one of the 128 blocks. Address bits A0 – A1 are ignored. Each 1M-bit quadrant has the same block selected.

A block-write cycle is entered in a manner similar to a DRAM-write cycle except DSF is held high on the first falling edge of $\overline{CAS}$. As in a DRAM-write operation, $\overline{WEL}$ enables writing of the lower DRAM DQ byte while $\overline{WEH}$ enables the upper byte. The column-mask data is input via the DQs and is latched on either the first falling edge of $\overline{WEx}$ or the falling edge of $\overline{CAS}$, whichever occurs later. The 16-bit color-data register must be loaded prior to performing a block write as described below. Refer to the write-per-bit section for details on use of the write-mask capability, allowing additional performance options.

Example of block write:

block-write column address = 110000000 (A0 – A8 from left to right)

	bit 0			bit 15
color-data register =	1011	1011	1100	0111
write-mask register =	1110	1111	1111	1011
column-mask register =	1111	0000	0111	1010
	1st Quad	2nd Quad	3rd Quad	4th Quad

Column-address bits A0 and A1 are ignored. Block 0 (columns 0 – 3) is selected for each 1M-bit quadrant. The first quadrant has DQ0 – DQ2 written with bits 0 – 2 from the color-data register (101) to all four columns of block 0. DQ3 is not written and retains its previous data due to write-mask-register-bit 3 being a 0.

The second quadrant (DQ4 – DQ7) has all four columns masked off due to the column-mask bits 4 – 7 being 0, so that no data is written.

The third quadrant (DQ8 – DQ11) has its four DQs written with bits 8 – 11 from the color-data register (1100) to columns 1 – 3 of its block 0. Column 0 is not written and retains its previous data on all four DQs due to column-mask-register-bit 8 being 0.

The fourth quadrant (DQ12 – DQ15) has DQ12, DQ14, and DQ15 written with bits 12, 14, and 15 from the color-data register to column 0 and column 2 of its block 0. DQ13 retains its previous data on all columns due to the write mask. Columns 1 and 3 retain their previous data on all DQs due to the column mask. If the previous data for the quadrant was all 0s, the fourth quadrant would contain the data pattern shown in Figure 11 after the block-write operation shown in the previous example.

block write (continued)

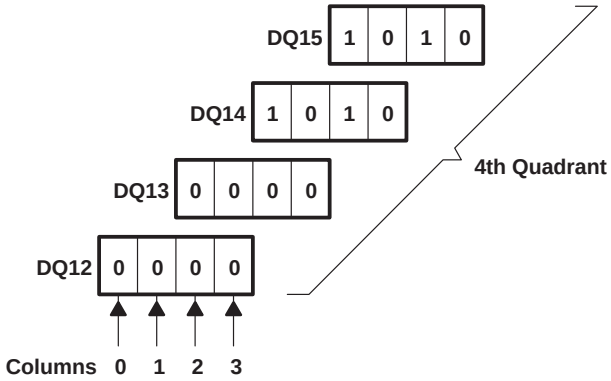

Figure 11. Example of Fourth Quadrant After Block-Write Operation

load color register

The load-color-register cycle is performed using normal DRAM-write-cycle timing except that DSF is held high on the falling edges of $\overline{RAS}$ and $\overline{CAS}$. The color register is loaded from pins DQ0 – DQ15, which are latched on either the first falling edge of $\overline{WEx}$ or the falling edge of $\overline{CAS}$, whichever occurs later. If only one $\overline{WEx}$ is low, only the corresponding byte of the color register is loaded. When the color register is loaded, it retains data until power is lost or until another load-color-register cycle is performed (see Figure 12 and Figure 13).

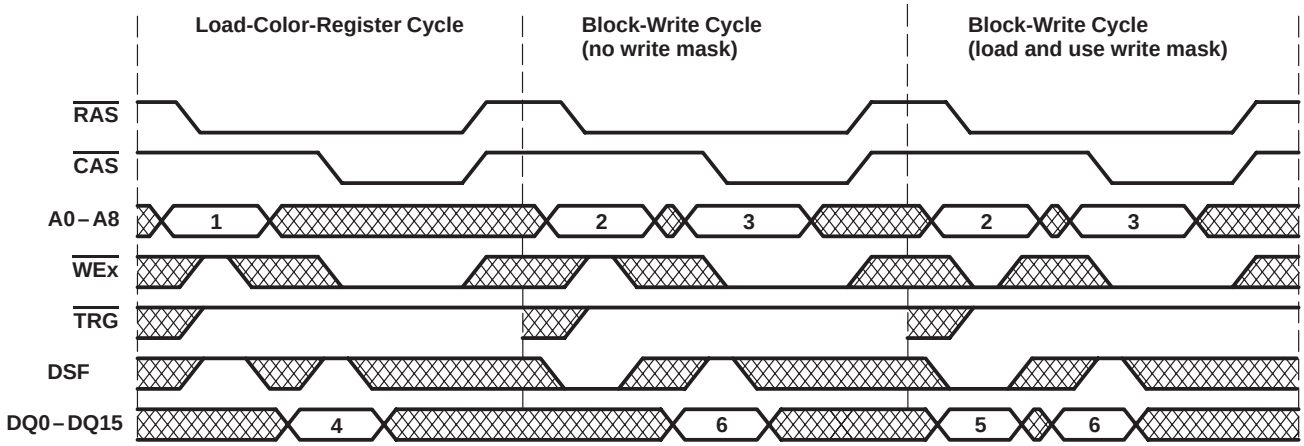

Legend:

1. Refresh address
2. Row address
3. Block address (A2 – A8) is latched on the falling edge of $\overline{CAS}$.
4. Color-register data
5. Write-mask data: DQ0 – DQ15 are latched on the falling edge of $\overline{RAS}$.
6. Column-mask data: DQi – DQi + 3 (i = 0, 4, 8, 12) are latched on either the first falling edge of $\overline{WEx}$ or the falling edge of $\overline{CAS}$, whichever occurs later.

= don't care

Figure 12. Example of Block Writes

load color register (continued)

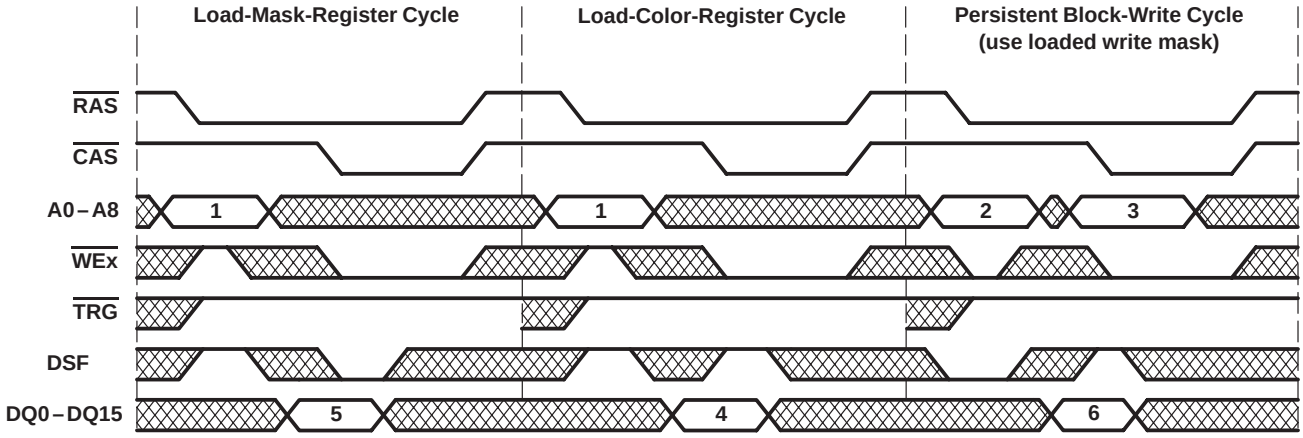

Legend:

1. Refresh address
2. Row address
3. Block address (A2 – A8) is latched on the falling edge of $\overline{CAS}$.
4. Color-register data
5. Write-mask data: DQ0 – DQ15 are latched on the falling edge of $\overline{CAS}$.
6. Column-mask data: DQi – DQi + 3 (i = 0, 4, 8, 12) are latched on either the first $\overline{WEx}$ falling edge or the falling edge of $\overline{CAS}$, whichever occurs later.

= don't care

Figure 13. Example of a Persistent Block Write

DRAM-to-SAM transfer operation

During the DRAM-to-SAM transfer operation, one half of a row (256 columns) in the DRAM array is selected to be transferred to the 256-bit serial-data register. The transfer operation is invoked by bringing $\overline{TRG}$ low and holding $\overline{WEx}$ high on the falling edge of $\overline{RAS}$. The state of DSF, which is latched on the falling edge of $\overline{RAS}$, determines whether the full-register-transfer read operation or the split-register-transfer read operation is performed.

Table 4. SAM Function Table

FUNCTION	$\overline{RAS}$ FALL				$\overline{CAS}$ FALL	ADDRESS		DQ0 – DQ15		MNE CODE
	$\overline{CAS}$	$\overline{TRG}$	$\overline{WEx}$†	DSF	DSF	$\overline{RAS}$	$\overline{CAS}$	$\overline{RAS}$	$\overline{CAS}$ $\overline{WEx}$	
Full-register-transfer read	H	L	H	L	X	Row Addr	Tap Point	X	X	RT
Split-register-transfer read	H	L	H	H	X	Row Addr	Tap Point	X	X	SRT

† Logic L is selected when either or both $\overline{WEL}$ and $\overline{WEU}$ are low.
X = don't care

full-register-transfer read

A full-register-transfer read operation loads data from a selected half of a row in the DRAM into the serial-access memory register (SAM). $\overline{TRG}$ is brought low and latched at the falling edge of $\overline{RAS}$. Nine row-address bits (A0 – A8) are also latched at the falling edge of $\overline{RAS}$ to select one of the 512 rows available for the transfer. The nine column-address bits (A0 – A8) are latched at the falling edge of $\overline{CAS}$, where address bit A8 selects which half of the row is transferred. Address bits A0 – A7 select each of the 256 available tap points (of the SAM register) from which the serial data is read (see Figure 14).

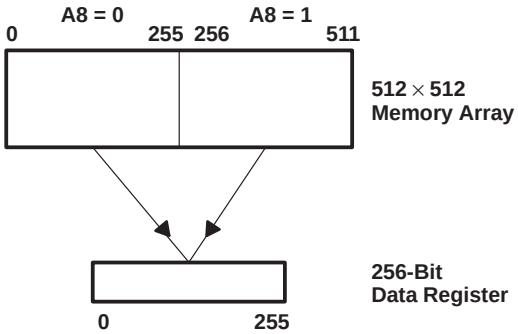

Figure 14. Full-Register-Transfer Read

A full-register-transfer read can be performed in three ways: early load, real-time load (or midline load), or late load. Each of these offers the flexibility of controlling the $\overline{TRG}$ trailing edge in the full-register-transfer read cycle (see Figure 15).

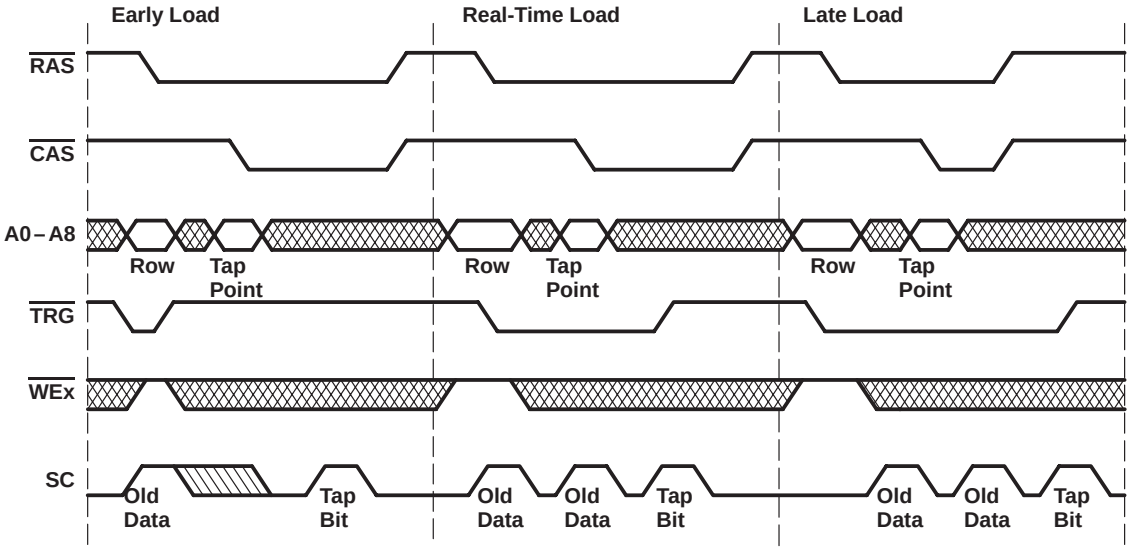

Figure 15. Example of Full-Register-Transfer Read Operations

split-register-transfer read

In the split-register-transfer read operation, the serial-data register is split into halves (see Figure 16). The low half contains bits 0 – 127, and the high half contains bits 128 – 255. While one half is being read out of the SAM port, the other half can be loaded from the memory array.

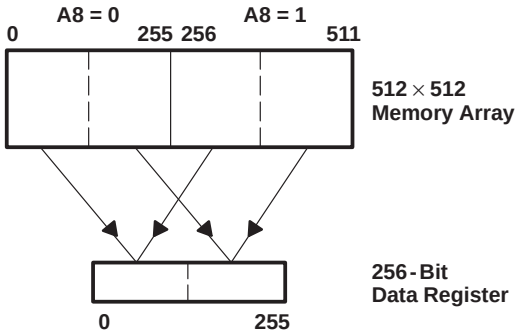

Figure 16. Split-Register-Transfer Read

To invoke a split-register-transfer read cycle, DSF is brought high, $\overline{TRG}$ is brought low, and both are latched at the falling edge of $\overline{RAS}$. Nine row-address bits (A0 – A8) are also latched at the falling edge of $\overline{RAS}$ to select one of the 512 rows available for the transfer. Eight of the nine column-address bits (A0 – A6 and A8) are latched at the falling edge of $\overline{CAS}$. Column-address bit A8 selects which half of the row is to be transferred. Column-address bits A0 – A6 select each of the 127 tap points in the specified half of the SAM. Column-address bit A7 is ignored, and the split-register-transfer is internally controlled to select the inactive register half (see Figure 17).

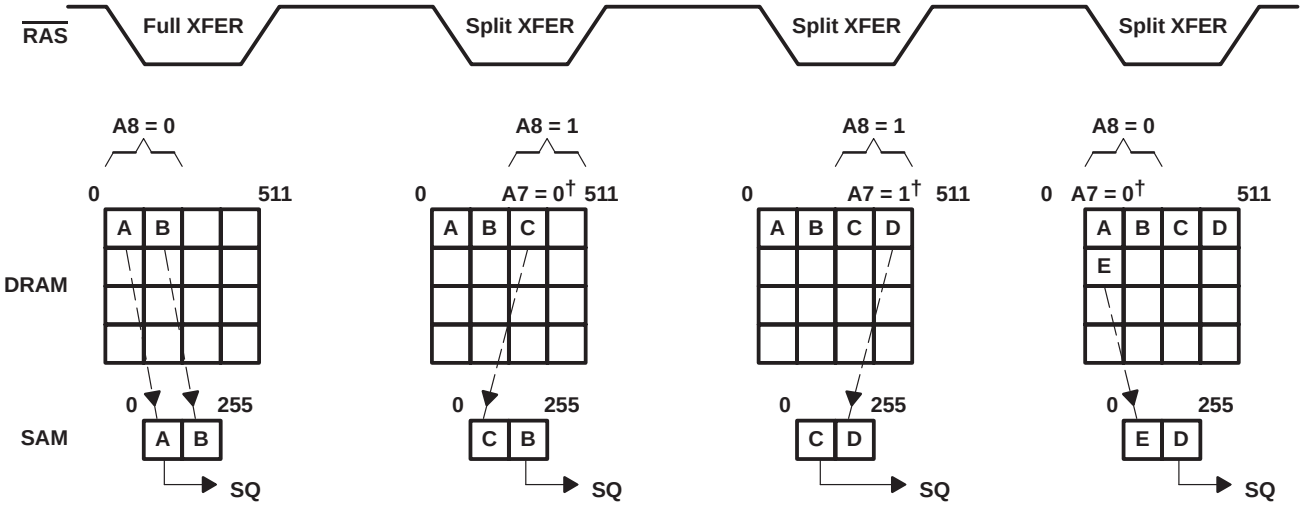

† A7 shown as internally controlled.

Figure 17. Example of a Split-Register-Transfer Read Operation

A full-register-transfer read must precede the first split-register-transfer read to ensure proper operation. After the full-register-transfer read cycle, the first split-register-transfer read can follow immediately without any minimum SC clock requirement.

split-register-transfer read (continued)

QSF indicates which half of the register is being accessed during serial-access operation. When QSF is low, the serial-address pointer is accessing the lower (least significant) 128 bits of the SAM. When QSF is high, the pointer is accessing the higher (most significant) 128 bits of the SAM. QSF changes state upon completing a full-register-transfer read cycle. The tap point loaded during the current transfer cycle determines the state of QSF. QSF also changes state when a boundary between two register halves is reached (see Figure 18 and Figure 19).

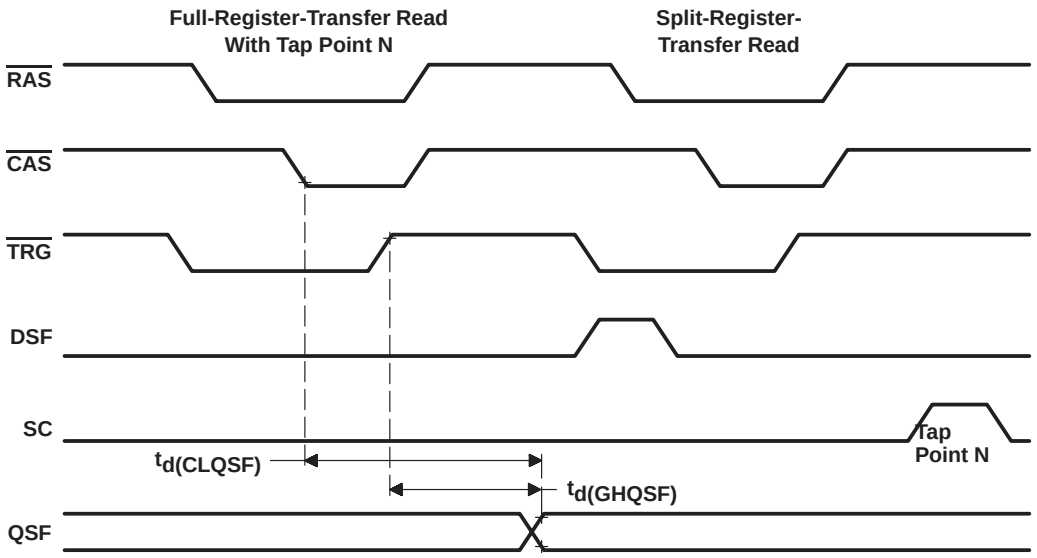

Figure 18. Example of a Split-Register-Transfer Read After a Full-Register-Transfer Read

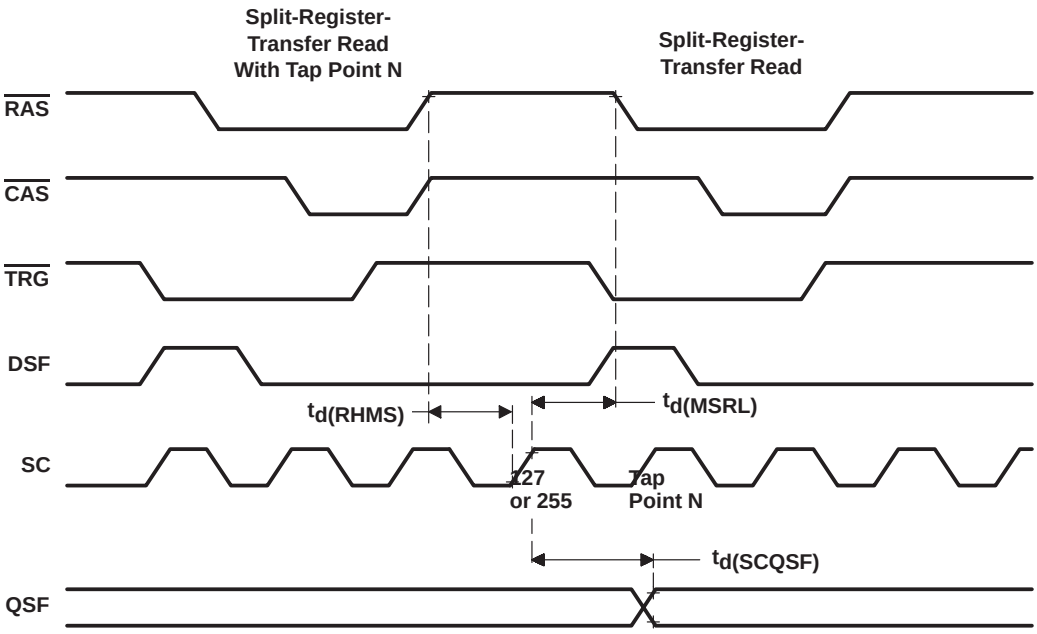

Figure 19. Example of Successive Split-Register-Transfer Read Operations

serial-read operation

The serial-read operation can be performed through the SAM port simultaneously and asynchronously with DRAM operations except during transfer operations. Serial data can be read from the SAM by clocking SC starting at the tap point loaded by the preceding transfer cycle, proceeding sequentially to the most significant bit (bit 255), and then wrapping around to the least significant bit (bit 0), as shown in Figure 20.

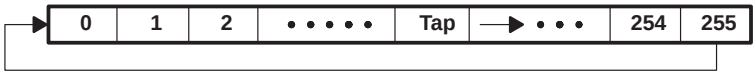

Figure 20. Serial-Pointer Direction for Serial Read

For split-register-transfer read operation, serial data can be read out from the active half of the SAM by clocking SC starting at the tap point loaded by the preceding split-register-transfer cycle. The serial pointer then proceeds sequentially to the most significant bit of the half, bit 127 or bit 255. If there is a split-register-transfer read to the inactive half during this period, the serial pointer points next to the tap point location loaded by that split-register-transfer (see Figure 21).

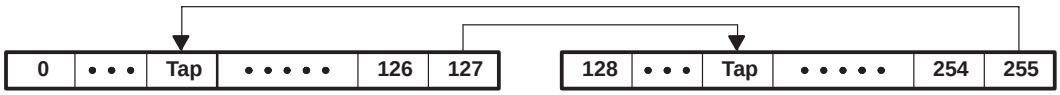

Figure 21. Serial Pointer for Split-Register-Transfer Read – Case I

If there is no split-register-transfer read to the inactive half during this period, the serial pointer points next to bit 128 or bit 0, respectively (see Figure 22).

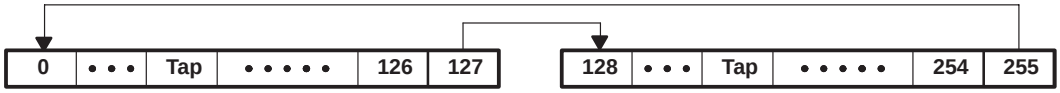

Figure 22. Serial Pointer for Split-Register-Transfer Read – Case II

split-register programmable stop point

The SMJ55166 offers programmable stop-point mode for split-register-transfer read operation. This mode can be used to improve two-dimensional drawing performance in a nonscanline data format.

In split-register-transfer read operation, the stop point is defined as a register location at which the serial output stops coming from one half of the SAM and switches to the opposite half of the SAM. While in stop-point mode, the SAM is divided into partitions whose lengths are programmed via row addresses A4–A7 in a CBR set (CBRS) cycle. The last serial-address location of each partition is the stop point (see Figure 23).

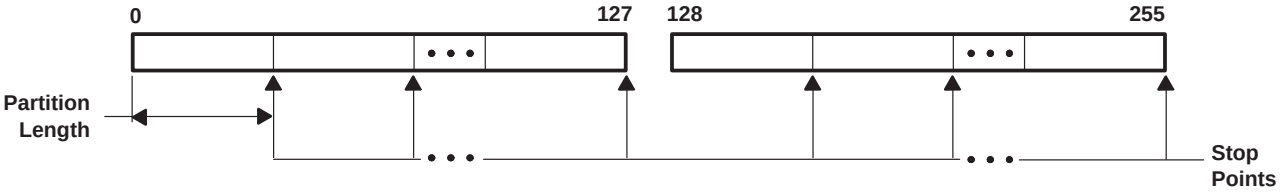

Figure 23. Example of the SAM With Partitions

split-register programmable stop point (continued)

Stop-point mode is not active until the CBRS cycle is initiated. The CBRS operation is enabled by holding $\overline{CAS}$ and $\overline{WEx}$ low and DSF high on the falling edge of $\overline{RAS}$. The falling edge of $\overline{RAS}$ also latches row addresses A4–A7, which are used to define the SAM partition length. The other row-address inputs are don't cares. Stop-point mode should be initiated after the initialization cycles are performed (see Table 5).

Table 5. Programming Code for Stop-Point Mode

MAXIMUM PARTITION LENGTH	ADDRESS AT $\overline{RAS}$ IN CBRS CYCLE						NUMBER OF PARTITIONS	STOP-POINT LOCATIONS
	A8	A7	A6	A5	A4	A0–A3		
16	X	L	L	L	L	X	16	15, 31, 47, 63, 79, 95, 111, 127, 143, 159, 175, 191, 207, 223, 239, 255
32	X	L	L	L	H	X	8	31, 63, 95, 127, 159, 191, 223, 255
64	X	L	L	H	H	X	4	63, 127, 191, 255
128 (default)	X	L	H	H	H	X	2	127, 255

In stop-point mode, the tap point loaded during the split-register-transfer read cycle determines the SAM partition in which the serial output begins, and also determines at which stop point the serial output stops coming from one half of the SAM and switches to the opposite half of the SAM (see Figure 24).

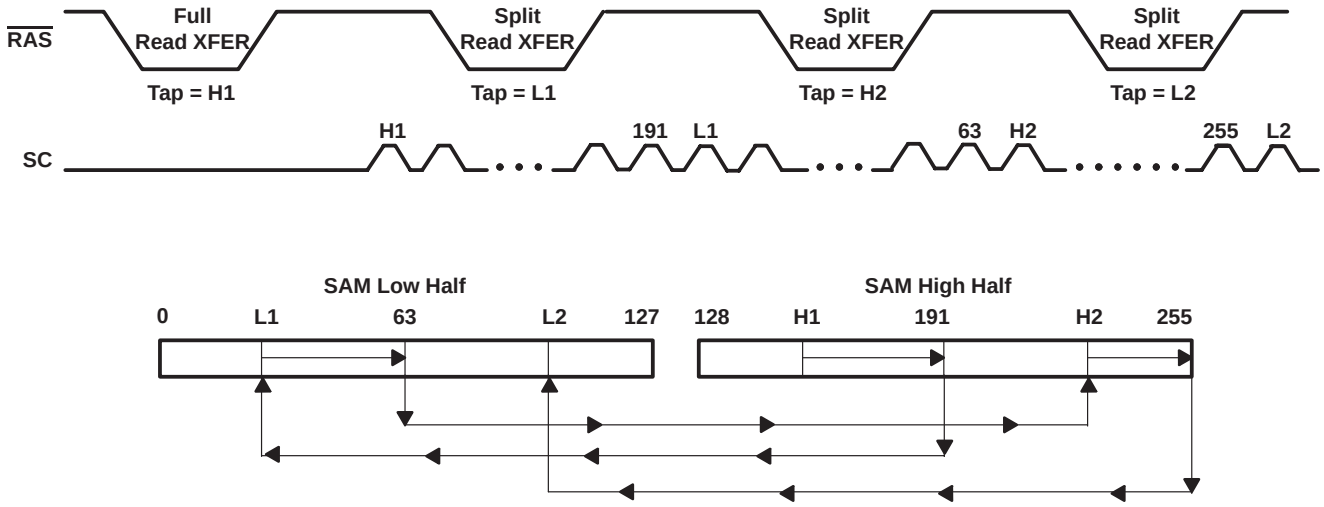

Figure 24. Example of Split-Register Operation With Programmable Stop Points

256-/512-bit compatibility of split-register programmable stop point

The stop-point mode is designed to be compatible with both 256-bit SAM and 512-bit SAM devices. After the CBRS cycle is initiated, the stop-point mode becomes active. In the stop-point mode, column-address bits AY7 and AY8 are internally swapped to assure compatibility (see Figure 25). This address-bit swap applies to the column address and is effective for all DRAM and transfer cycles. For example, during the split-register-transfer cycle with stop point, column-address bit AY8 is a don't care and AY7 decodes the DRAM row half for the split-register-transfer. During stop-point mode, a CBR (option reset) cycle is not recommended because this ends the stop-point mode and restores address bits AY7 and AY8 to their normal functions. Consistent use of CBR cycles ensures that the SMJ55166 remains in normal mode.

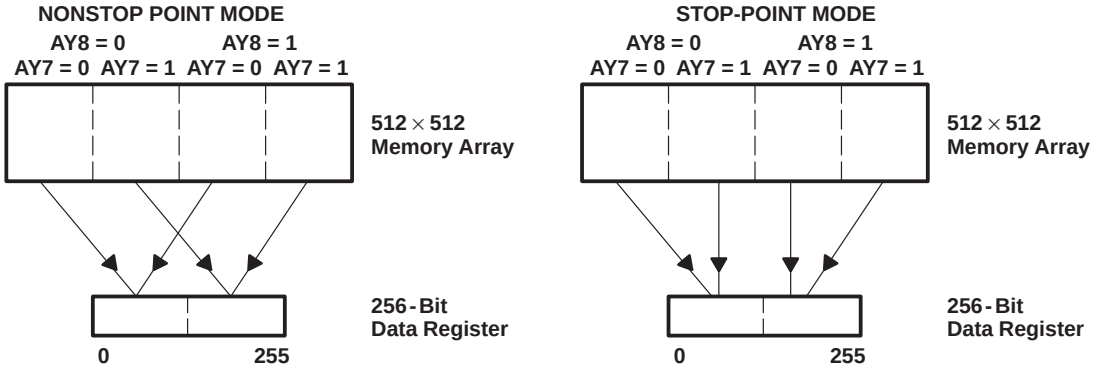

Figure 25. DRAM-to-SAM Mapping, Nonstop Point Versus Stop Point

IMPORTANT: For proper device operation, a stop-point-mode (CBRS) cycle should be initiated immediately after the power-up initialization cycles are performed.

power up

To achieve proper device operation, an initial pause of 200 µs is required after power up followed by a minimum of eight $\overline{RAS}$ cycles or eight CBR cycles to initialize the DRAM port. A full-register-transfer read cycle and two SC cycles are required to initialize the SAM port.

After initialization, the internal state of the SMJ55166 is as follows:

	STATE AFTER INITIALIZATION
QSF	Defined by the transfer cycle during initialization
Write mode	Nonpersistent mode
Write-mask register	Undefined
Color register	Undefined
Serial-register tap point	Defined by the transfer cycle during initialization
SAM port	Output mode

absolute maximum ratings over operating free-air temperature range (unless otherwise noted)†

Supply voltage range, V_{CC} (see Note 1) . . . . . –1 V to 7 V
Voltage range on any pin . . . . . –1 V to 7 V
Short-circuit output current . . . . . 50 mA
Power dissipation . . . . . 1.1 W
Operating free-air temperature range, T_A . . . . . – 55°C to 125°C
Storage temperature range, T_{stg} . . . . . –65°C to 150°C

† Stresses beyond those listed under "absolute maximum ratings" may cause permanent damage to the device. These are stress ratings only, and functional operation of the device at these or any other conditions beyond those indicated under "recommended operating conditions" is not implied. Exposure to absolute-maximum-rated conditions for extended periods may affect device reliability.

NOTE 1: All voltage values are with respect to V_{SS}.

recommended operating conditions

		MIN	NOM	MAX	UNIT
V_{CC}	Supply voltage	4.5	5	5.5	V
V_{SS}	Supply voltage		0		V
V_{IH}	High-level input voltage	2.4		6.5	V
V_{IL}	Low-level input voltage (see Note 2)	–1		0.8	V
T_A	Operating free-air temperature	– 55		125	°C

NOTE 2: The algebraic convention, where the more negative (less positive) limit is designated as minimum, is used for logic-voltage levels only.

electrical characteristics over recommended ranges of supply voltage and operating free-air temperature (unless otherwise noted)

PARAMETER		TEST CONDITIONS‡	SAM PORT	'55166-75		'55166-80		UNIT
				MIN	MAX	MIN	MAX	
V_{OH}	High-level output voltage	I_{OH} = –1 mA		2.4		2.4		V
V_{OL}	Low-level output voltage	I_{OL} = 2 mA			0.4		0.4	V
I_I	Input current (leakage)	V_{CC} = 5.5 V, V_I = 0 V to 5.8 V, All other pins at 0 V to V_{CC}			±10		±10	µA
I_O	Output current (leakage) (see Note 3)	V_{CC} = 5.5 V, V_O = 0 V to V_{CC}			±10		±10	µA
I_{CC1}	Operating current §	See Note 4	Standby		165		160	mA
I_{CC1A}	Operating current §	$t_{c(SC)}$ = MIN	Active		210		195	mA
I_{CC2}	Standby current	All clocks = V_{CC}	Standby		12		12	mA
I_{CC2A}	Standby current	$t_{c(SC)}$ = MIN	Active		70		65	mA
I_{CC3}	$\overline{RAS}$-only refresh current	See Note 4	Standby		165		160	mA
I_{CC3A}	$\overline{RAS}$-only refresh current	$t_{c(SC)}$ = MIN, (See Note 4)	Active		215		195	mA
I_{CC4}	Page-mode current §	$t_{c(P)}$ = MIN, (See Note 5)	Standby		100		95	mA
I_{CC4A}	Page-mode current §	$t_{c(SC)}$ = MIN, (See Note 5)	Active		145		130	mA
I_{CC5}	CBR current	See Note 4	Standby		165		160	mA
I_{CC5A}	CBR current	$t_{c(SC)}$ = MIN, (See Note 4)	Active		210		195	mA
I_{CC6}	Data-transfer current	See Note 4	Standby		180		170	mA
I_{CC6A}	Data-transfer current	$t_{c(SC)}$ = MIN	Active		225		200	mA

‡ For conditions shown as MIN/MAX, use the appropriate value specified in the timing requirements.
§ Measured with outputs open

NOTES: 3. $\overline{SE}$ is disabled for SQ output leakage tests.
4. Measured with one address change while $\overline{RAS}$ = V_{IL} and $t_{c(rd)}$, $t_{c(W)}$, $t_{c(TRD)}$ = MIN
5. Measured with one address change while $\overline{CASx}$ = V_{IH}

capacitance over recommended ranges of supply voltage and operating free-air temperature, f = 1 MHz (see Note 6)

PARAMETER		MIN	TYP	MAX	UNIT
$C_{i(A)}$	Input capacitance, A0 – A8		5	10	pF
$C_{i(RC)}$	Input capacitance, $\overline{CAS}$ and $\overline{RAS}$		8	10	pF
$C_{i(W)}$	Input capacitance, $\overline{WEL}$ and $\overline{WEU}$		7	10	pF
$C_{i(SC)}$	Input capacitance, SC		6	10	pF
$C_{i(SE)}$	Input capacitance, $\overline{SE}$		7	10	pF
$C_{i(DSF)}$	Input capacitance, QSF		7	10	pF
$C_{i(TRG)}$	Input capacitance, $\overline{TRG}$		7	10	pF
$C_{o(O)}$	Output capacitance, SQ and DQ		12	15	pF
$C_{o(QSF)}$	Output capacitance, QSF		10	12	pF

NOTE 6: V_{CC} = 5 V ± 0.5 V, and the bias on pins under test is 0 V.

switching characteristics over recommended ranges of supply voltage and operating free-air temperature (see Note 7)

PARAMETER		TEST CONDITIONS †	ALT. SYMBOL	'55166-75		'55166-80		UNIT
				MIN	MAX	MIN	MAX	
$t_{a(C)}$	Access time from $\overline{CAS}$	$t_{d(RLCL)}$ = MAX	t_{CAC}		20		20	ns
$t_{a(CA)}$	Access time from column address	$t_{d(RLCL)}$ = MAX	t_{AA}		38		40	ns
$t_{a(CP)}$	Access time from $\overline{CAS}$ high	$t_{d(RLCL)}$ = MAX	t_{CPA}		43		45	ns
$t_{a(R)}$	Access time from $\overline{RAS}$	$t_{d(RLCL)}$ = MAX	t_{RAC}		75		80	ns
$t_{a(G)}$	Access time of DQ from $\overline{TRG}$ low		t_{OEA}		20		20	ns
$t_{a(SQ)}$	Access time of SQ from SC high	C_L = 30 pF	t_{SCA}		23		25	ns
$t_{a(SE)}$	Access time of SQ from $\overline{SE}$ low	C_L = 30 pF	t_{SEA}		18		20	ns
$t_{dis(CH)}$	Disable time, random output from $\overline{CAS}$ high (see Note 8)	C_L = 50 pF	t_{OFF}	0	20	0	20	ns
$t_{dis(RH)}$	Disable time, random output from $\overline{RAS}$ high (see Note 8)	C_L = 50 pF		0	20	0	20	ns
$t_{dis(G)}$	Disable time, random output from $\overline{TRG}$ high (see Note 8)	C_L = 50 pF	t_{OEZ}	0	20	0	20	ns
$t_{dis(WL)}$	Disable time, random output from $\overline{WE}$ low (see Note 8)	C_L = 50 pF	t_{WEZ}	0	25	0	25	ns
$t_{dis(SE)}$	Disable time, serial output from $\overline{SE}$ high (see Note 8)	C_L = 30 pF	t_{SEZ}	0	18	0	20	ns

† For conditions shown as MIN/MAX, use the appropriate value specified in the timing requirements.

NOTES: 7. Switching times for RAM-port output are measured with a load equivalent to 1 TTL load and 50 pF. Data-out reference level: V_{OH} / V_{OL} = 2 V/0.8 V. Switching times for SAM-port output are measured with a load equivalent to 1 TTL load and 30 pF. Serial-data-out reference level: V_{OH} / V_{OL} = 2 V/0.8 V.

8. $t_{dis(CH)}$, $t_{dis(RH)}$, $t_{dis(G)}$, $t_{dis(WL)}$, and $t_{dis(SE)}$ are specified when the output is no longer driven.

timing requirements over recommended ranges of supply voltage and operating free-air temperature†

		ALT. SYMBOL	’55166-75		’55166-80		UNIT
			MIN	MAX	MIN	MAX	
$t_{c(rd)}$	Cycle time, read	t_{RC}	140		150		ns
$t_{c(W)}$	Cycle time, write	t_{WC}	140		150		ns
$t_{c(rdW)}$	Cycle time, read-modify-write	t_{RMW}	188		200		ns
$t_{c(P)}$	Cycle time, page-mode read, write	t_{PC}	48		50		ns
$t_{c(RDWP)}$	Cycle time, page-mode read-modify-write	t_{PRMW}	88		90		ns
$t_{c(TRD)}$	Cycle time, transfer read	t_{RC}	140		150		ns
$t_{c(SC)}$	Cycle time, SC (see Note 9)	t_{SCC}	24		30		ns
$t_{w(CH)}$	Pulse duration, $\overline{CAS}$ high	t_{CPN}	10		10		ns
$t_{w(CL)}$	Pulse duration, $\overline{CAS}$ low (see Note 10)	t_{CAS}	20	10 000	20	10 000	ns
$t_{w(RH)}$	Pulse duration, $\overline{RAS}$ high	t_{RP}	55		60		ns
$t_{w(RL)}$	Pulse duration, $\overline{RAS}$ low (see Note 11)	t_{RAS}	75	10 000	80	10 000	ns
$t_{w(WL)}$	Pulse duration, $\overline{WEx}$ low	t_{WP}	13		15		ns
$t_{w(TRG)}$	Pulse duration, $\overline{TRG}$ low		20		20		ns
$t_{w(SCH)}$	Pulse duration, SC high	t_{SC}	9		10		ns
$t_{w(SCL)}$	Pulse duration, SC low	t_{SCP}	9		10		ns
$t_{w(GH)}$	Pulse duration, $\overline{TRG}$ high	t_{TP}	20		20		ns
$t_{w(RL)P}$	Pulse duration, $\overline{RAS}$ low (page mode)	t_{RASP}	75	100 000	80	100 000	ns
$t_{su(CA)}$	Setup time, column address before $\overline{CAS}$ low	t_{ASC}	0		0		ns
$t_{su(SFC)}$	Setup time, DSF before $\overline{CAS}$ low	t_{FSC}	0		0		ns
$t_{su(RA)}$	Setup time, row address before $\overline{RAS}$ low	t_{ASR}	0		0		ns
$t_{su(WMR)}$	Setup time, $\overline{WEx}$ before $\overline{RAS}$ low	t_{WSR}	0		0		ns
$t_{su(DQR)}$	Setup time, DQ before $\overline{RAS}$ low	t_{MS}	0		0		ns
$t_{su(TRG)}$	Setup time, $\overline{TRG}$ high before $\overline{RAS}$ low	t_{THS}	0		0		ns
$t_{su(SFR)}$	Setup time, DSF low before $\overline{RAS}$ low	t_{FSR}	0		0		ns
$t_{su(DCL)}$	Setup time, data valid before $\overline{CAS}$ low	t_{DSC}	0		0		ns
$t_{su(DWL)}$	Setup time, data valid before $\overline{WEx}$ low	t_{DSW}	0		0		ns
$t_{su(rd)}$	Setup time, read command, $\overline{WEx}$ high before $\overline{CAS}$ low	t_{RCS}	0		0		ns
$t_{su(WCL)}$	Setup time, early write command, $\overline{WEx}$ low before $\overline{CAS}$ low	t_{WCS}	0		0		ns
$t_{su(WCH)}$	Setup time, $\overline{WEx}$ low before $\overline{CAS}$ high, write	t_{CWL}	18		20		ns
$t_{su(WRH)}$	Setup time, $\overline{WEx}$ low before $\overline{RAS}$ high, write	t_{RWL}	20		20		ns
$t_{h(CLCA)}$	Hold time, column address after $\overline{CAS}$ low	t_{CAH}	13		15		ns
$t_{h(SFC)}$	Hold time, DSF after $\overline{CAS}$ low	t_{CFH}	15		15		ns

† Timing measurements are referenced to V_{IL} MAX and V_{IH} MIN.

NOTES: 9. Cycle time assumes t_t = 3 ns.

10. In a read-modify-write cycle, $t_{d(CLWL)}$ and $t_{su(WCH)}$ must be observed. Depending on the user’s transition times, this can require additional $\overline{CAS}$ low time [$t_{w(CL)}$].

11. In a read-modify-write cycle, $t_{d(RLWL)}$ and $t_{su(WRH)}$ must be observed. Depending on the user’s transition times, this can require additional $\overline{RAS}$ low time [$t_{w(RL)}$].

timing requirements over recommended ranges of supply voltage and operating free-air temperature (continued)†

		ALT. SYMBOL	’55166-75		’55166-80		UNIT
			MIN	MAX	MIN	MAX	
$t_{h(RA)}$	Hold time, row address after $\overline{RAS}$ low	t_{RAH}	10		10		ns
$t_{h(TRG)}$	Hold time, $\overline{TRG}$ after $\overline{RAS}$ low	t_{THH}	15		15		ns
$t_{h(RWM)}$	Hold time, write mask after $\overline{RAS}$ low	t_{RWH}	15		15		ns
$t_{h(RDQ)}$	Hold time, DQ after $\overline{RAS}$ low (write-mask operation)	t_{MH}	15		15		ns
$t_{h(SFR)}$	Hold time, DSF after $\overline{RAS}$ low	t_{RFH}	10		10		ns
$t_{h(RLCA)}$	Hold time, column address valid after $\overline{RAS}$ low (see Note 12)	t_{AR}	33		35		ns
$t_{h(CLD)}$	Hold time, data valid after $\overline{CAS}$ low	t_{DH}	15		15		ns
$t_{h(RLD)}$	Hold time, data valid after $\overline{RAS}$ low (see Note 12)	t_{DHR}	35		35		ns
$t_{h(WLD)}$	Hold time, data valid after $\overline{WEx}$ low	t_{DH}	15		15		ns
$t_{h(CHrd)}$	Hold time, read, $\overline{WEx}$ high after $\overline{CAS}$ high (see Note 13)	t_{RCH}	0		0		ns
$t_{h(RHrd)}$	Hold time, read, $\overline{WEx}$ high after $\overline{RAS}$ high (see Note 13)	t_{RRH}	0		0		ns
$t_{h(CLW)}$	Hold time, write, $\overline{WEx}$ low after $\overline{CAS}$ low	t_{WCH}	15		15		ns
$t_{h(RLW)}$	Hold time, write, $\overline{WEx}$ low after $\overline{RAS}$ low (see Note 12)	t_{WCR}	35		35		ns
$t_{h(WLG)}$	Hold time, $\overline{TRG}$ high after $\overline{WEx}$ low (see Note 14)	t_{OEH}	10		10		ns
$t_{h(SHSQ)}$	Hold time, SQ after SC high	t_{SOH}	2		2		ns
$t_{h(RSF)}$	Hold time, DSF after $\overline{RAS}$ low	t_{FHR}	35		35		ns
$t_{h(CLQ)}$	Hold time, Output after $\overline{CAS}$ low	t_{DHC}	0		0		ns
$t_{d(RLCH)}$	Delay time, $\overline{RAS}$ low to $\overline{CAS}$ high	t_{CSH}	75		80		ns
	(See Note 15)	t_{CHR}	13		15		
$t_{d(CHRL)}$	Delay time, $\overline{CAS}$ high to $\overline{RAS}$ low	t_{CRP}	0		0		ns
$t_{d(CLRH)}$	Delay time, $\overline{CAS}$ low to $\overline{RAS}$ high	t_{RSH}	20		20		ns
$t_{d(CLWL)}$	Delay time, $\overline{CAS}$ low to $\overline{WEx}$ low (see Notes 16 and 17)	t_{CWD}	48		50		ns
$t_{d(RLCL)}$	Delay time, $\overline{RAS}$ low to $\overline{CAS}$ low (see Note 18)	t_{RCD}	20	50	20	60	ns
$t_{d(CARH)}$	Delay time, column address valid to $\overline{RAS}$ high	t_{RAL}	38		40		ns
$t_{d(CACH)}$	Delay time, column address valid to $\overline{CAS}$ high	t_{CAL}	38		40		ns
$t_{d(RLWL)}$	Delay time, $\overline{RAS}$ low to $\overline{WEx}$ low (see Note 16)	t_{RWD}	95		100		ns
$t_{d(CAWL)}$	Delay time, column address valid to $\overline{WEx}$ low (see Note 16)	t_{AWD}	63		65		ns
$t_{d(CLRL)}$	Delay time, $\overline{CAS}$ low to $\overline{RAS}$ low (see Note 15)	t_{CSR}	0		0		ns
$t_{d(RHCL)}$	Delay time, $\overline{RAS}$ high to $\overline{CAS}$ low (see Note 15)	t_{RPC}	0		0		ns
$t_{d(CLGH)}$	Delay time, $\overline{CAS}$ low to $\overline{TRG}$ high for DRAM read cycles		20		20		ns
$t_{d(GHD)}$	Delay time, $\overline{TRG}$ high before data applied at DQ	t_{OED}	15		15		ns

† Timing measurements are referenced to V_{IL} MAX and V_{IH} MIN.

NOTES:
12. The minimum value is measured when $t_{d(RLCL)}$ is set to $t_{d(RLCL)}$ MIN as a reference.
13. Either $t_{h(RHrd)}$ or $t_{h(CHrd)}$ must be satisfied for a read cycle.
14. Output-enable-controlled write; the output remains in the high-impedance state for the entire cycle.
15. CBR refresh operation only
16. Read-modify-write operation only
17. $\overline{TRG}$ must disable the output buffers prior to applying data to the DQ pins.
18. The maximum value is specified only to assure $\overline{RAS}$ access time.

timing requirements over recommended ranges of supply voltage and operating free-air temperature (continued)†

		ALT. SYMBOL	’55166-75		’55166-80		UNIT
			MIN	MAX	MIN	MAX	
$t_{d(RLTH)}$	Delay time, $\overline{RAS}$ low to $\overline{TRG}$ high (see Note 19)	t_{RTH}	58		60		ns
$t_{d(RLSH)}$	Delay time, $\overline{RAS}$ low to first SC high after $\overline{TRG}$ high (see Note 20)	t_{RSD}	75		80		ns
$t_{d(RLCA)}$	Delay time, $\overline{RAS}$ low to column address valid	t_{RAD}	15	35	15	40	ns
$t_{d(GLRH)}$	Delay time, $\overline{TRG}$ low to $\overline{RAS}$ high	t_{ROH}	20		20		ns
$t_{d(CLSH)}$	Delay time, $\overline{CAS}$ low to first SC high after $\overline{TRG}$ high (see Note 20)	t_{CSD}	23		25		ns
$t_{d(SCTR)}$	Delay time, SC high to $\overline{TRG}$ high (see Notes 19 and 20)	t_{TSL}	5		5		ns
$t_{d(THRH)}$	Delay time, $\overline{TRG}$ high to $\overline{RAS}$ high (see Note 19)	t_{TRD}	–10		–10		ns
$t_{d(THRL)}$	Delay time, $\overline{TRG}$ high to $\overline{RAS}$ low (see Note 21)	t_{TRP}	55		60		ns
$t_{d(THSC)}$	Delay time, $\overline{TRG}$ high to SC high (see Note 19)	t_{TSD}	18		20		ns
$t_{d(RHMS)}$	Delay time, $\overline{RAS}$ high to last (most significant) rising edge of SC before boundary switch during split-register-transfer read cycles		20		20		ns
$t_{d(CLTH)}$	Delay time, $\overline{CAS}$ low to $\overline{TRG}$ high in real-time-transfer read cycles	t_{CTH}	15		15		ns
$t_{d(CASH)}$	Delay time, column address to first SC in early-load-transfer read cycles	t_{ASD}	28		30		ns
$t_{d(CAGH)}$	Delay time, column address to $\overline{TRG}$ high in real-time-transfer read cycles	t_{ATH}	20		20		ns
$t_{d(DCL)}$	Delay time, data to $\overline{CAS}$ low	t_{DZC}	0		0		ns
$t_{d(DGL)}$	Delay time, data to $\overline{TRG}$ low	t_{DZO}	0		0		ns
$t_{d(MSRL)}$	Delay time, last (most significant) rising edge of SC to $\overline{RAS}$ low before boundary switch during split-transfer read cycles		20		20		ns
$t_{d(SCQSF)}$	Delay time, last (127 or 255) rising edge of SC to QSF switching at the boundary during split-register-transfer read cycles (see Note 22)	t_{SQD}		28		30	ns
$t_{d(CLQSF)}$	Delay time, $\overline{CAS}$ low to QSF switching in transfer read cycles (see Note 22)	t_{CQD}		33		35	ns
$t_{d(GHQSF)}$	Delay time, $\overline{TRG}$ high to QSF switching in transfer read cycles (see Note 22)	t_{TQD}		28		30	ns
$t_{d(RLQSF)}$	Delay time, $\overline{RAS}$ low to QSF switching in transfer read cycles (see Note 22)	t_{RQD}		73		75	ns
$t_{rf(MA)}$	Refresh time interval, memory	t_{REF}		8		8	ms
t_t	Transition time	t_T	3	50	3	50	ns

† Timing measurements are referenced to V_{IL} MAX and V_{IH} MIN.

NOTES: 19. Real-time-load transfer read or late-load-transfer read cycle only
20. Early-load-transfer read cycle only
21. Full-register-(read) transfer cycles only
22. Switching times for QSF output are measured with a load equivalent to 1 TTL load and 30 pF, and the output reference level is V_{OH} / V_{OL} = 2 V/0.8 V.

PARAMETER MEASUREMENT INFORMATION

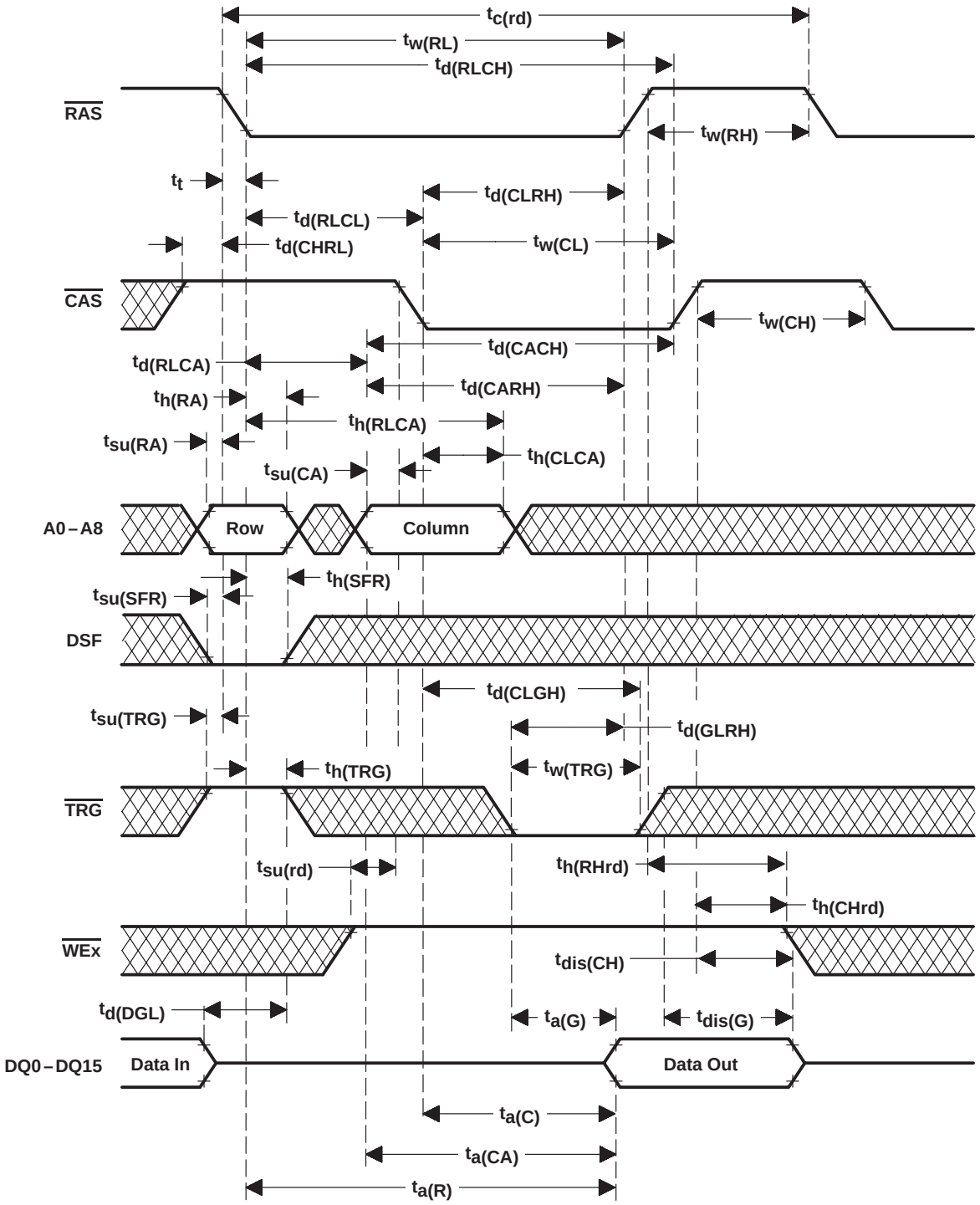

Figure 26. Read-Cycle Timing With $\overline{\text{CAS}}$-Controlled Output

PARAMETER MEASUREMENT INFORMATION

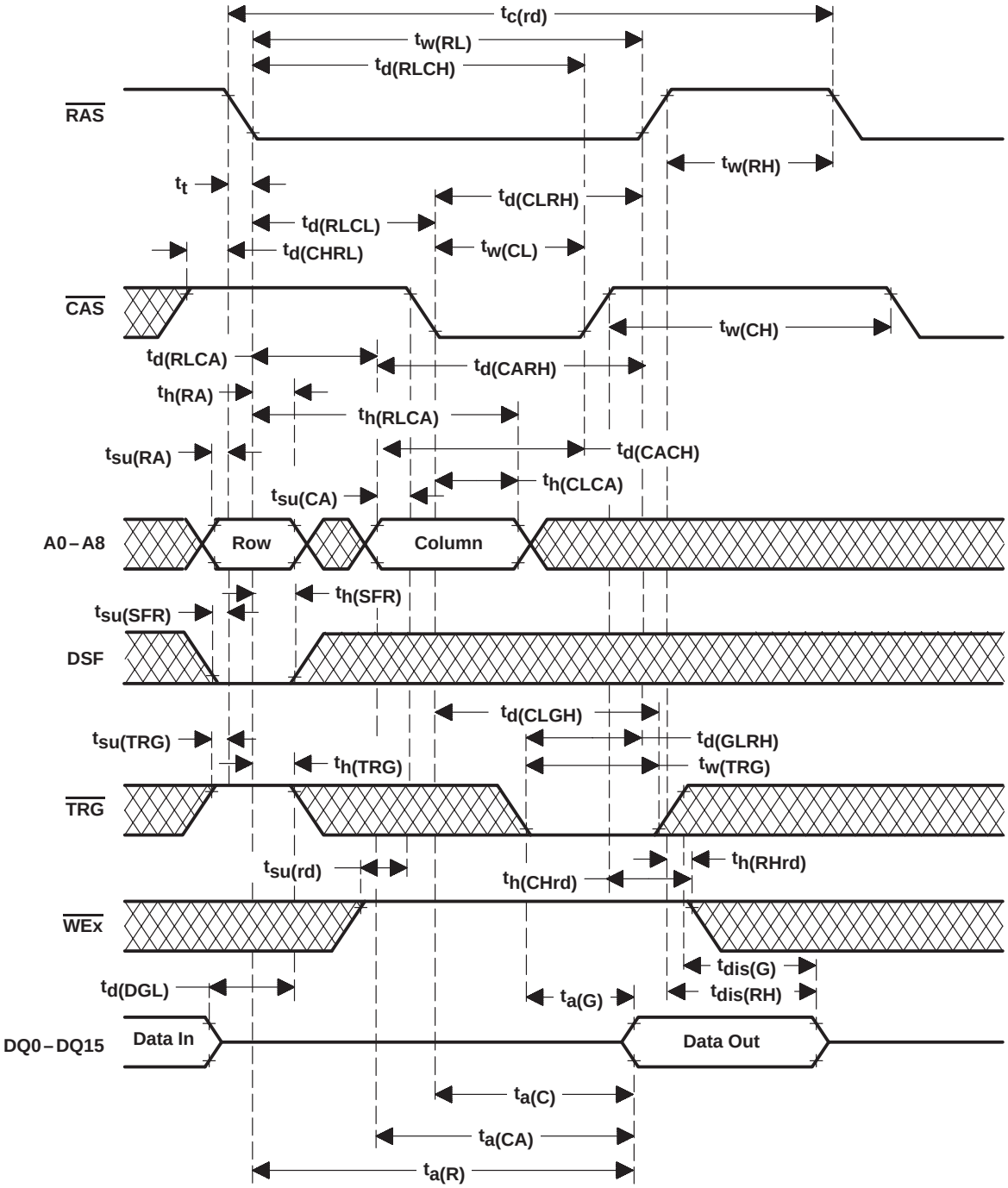

Figure 27. Read-Cycle Timing With $\overline{\text{RAS}}$-Controlled Output

PARAMETER MEASUREMENT INFORMATION

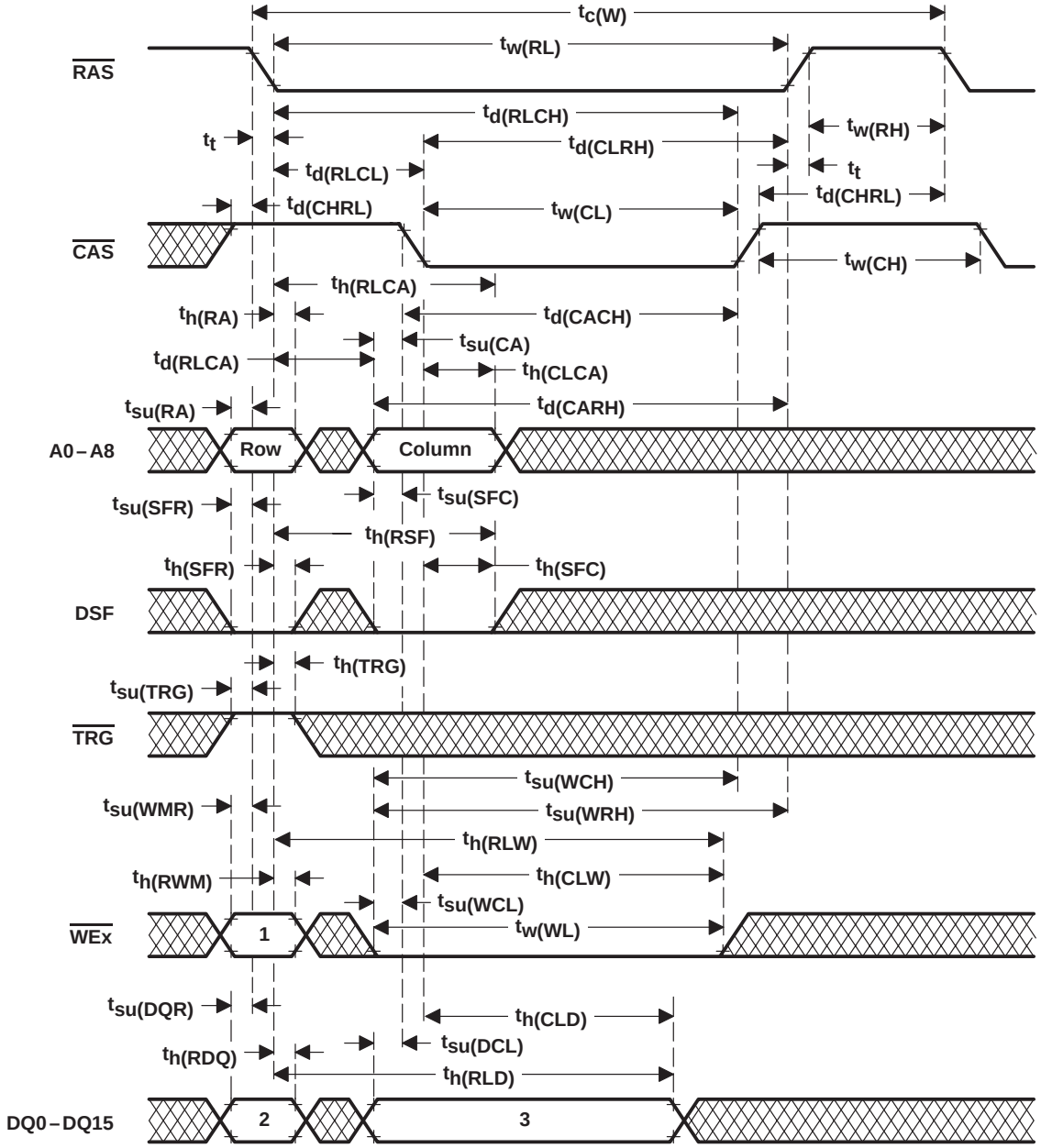

Figure 28. Early-Write-Cycle Timing

Table 6. Early-Write-Cycle State Table

CYCLE	STATE		
	1	2	3
Write operation (nonmasked)	H	Don’t care	Valid data
Write operation with nonpersistent write-per-bit	L	Write mask	Valid data
Write operation with persistent write-per-bit	L	Don’t care	Valid data

PARAMETER MEASUREMENT INFORMATION

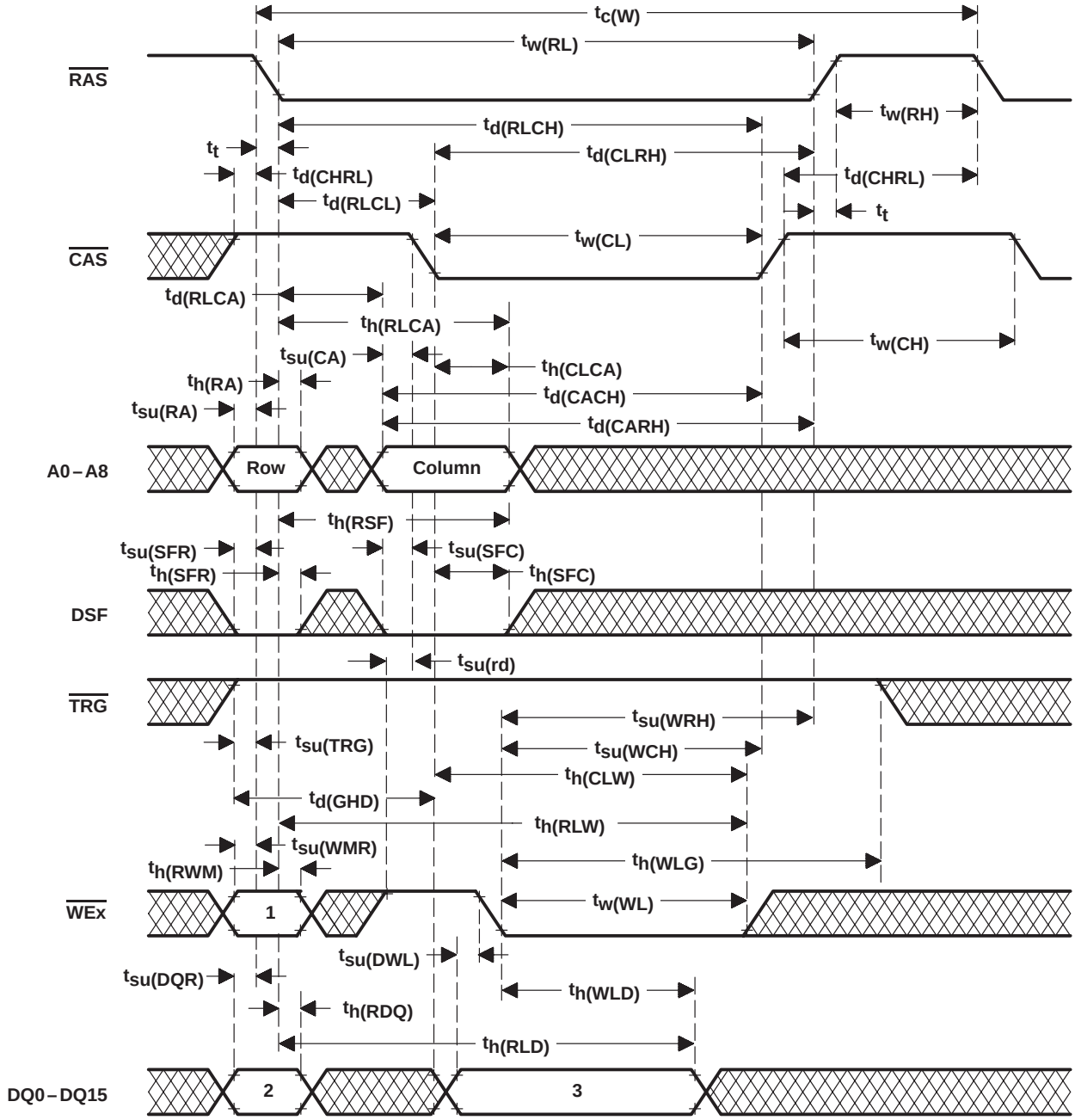

Figure 29. Late-Write-Cycle Timing (Output-Enable-Controlled Write)

Table 7. Late-Write-Cycle State Table

CYCLE	STATE		
	1	2	3
Write operation (nonmasked)	H	Don’t care	Valid data
Write operation with nonpersistent write-per-bit	L	Write mask	Valid data
Write operation with persistent write-per-bit	L	Don’t care	Valid data

PARAMETER MEASUREMENT INFORMATION

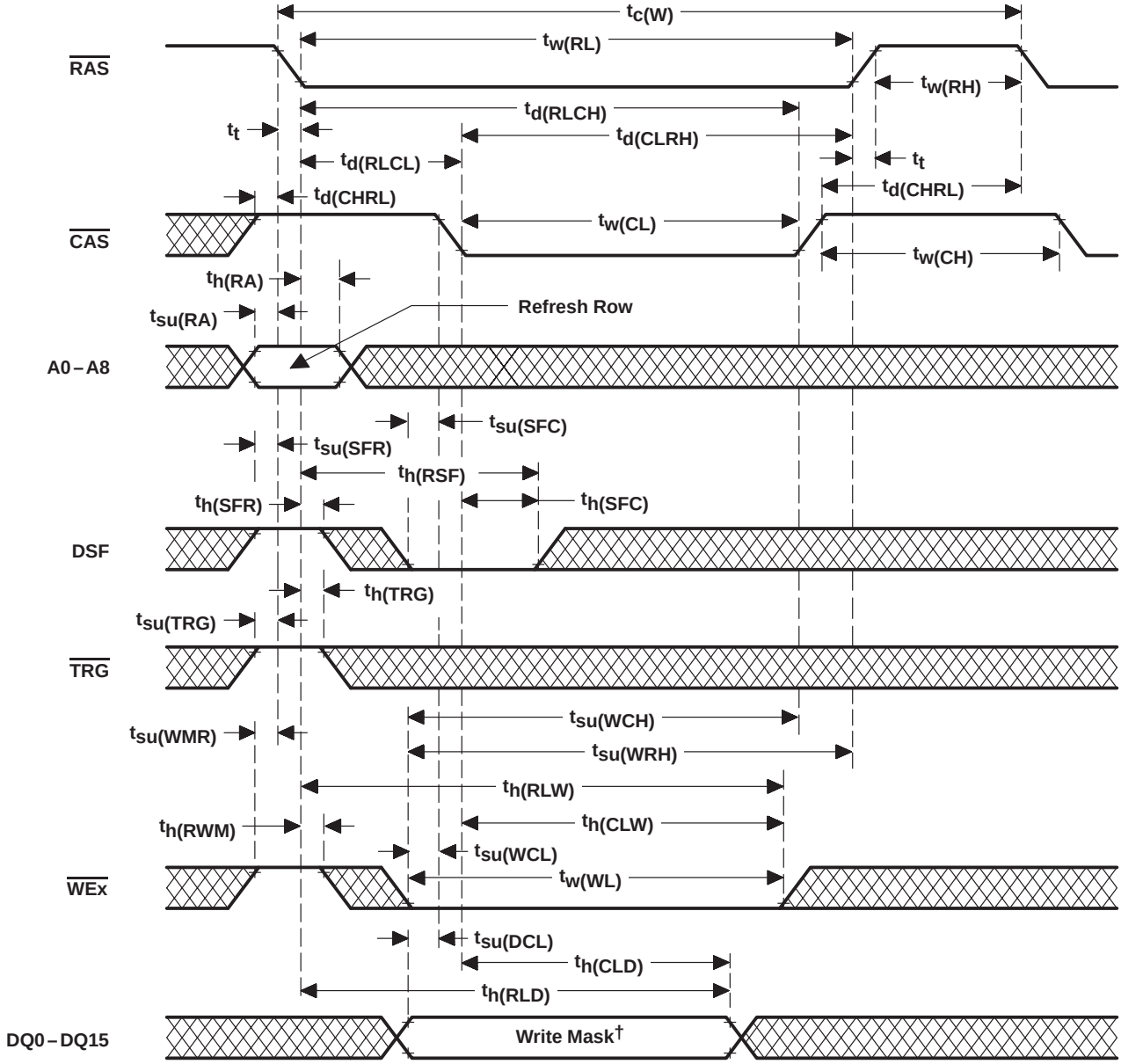

† Load-write-mask-register cycle puts the device into the persistent write-per-bit mode.

Figure 30. Load-Write-Mask-Register-Cycle Timing (Early-Write Load)

PARAMETER MEASUREMENT INFORMATION

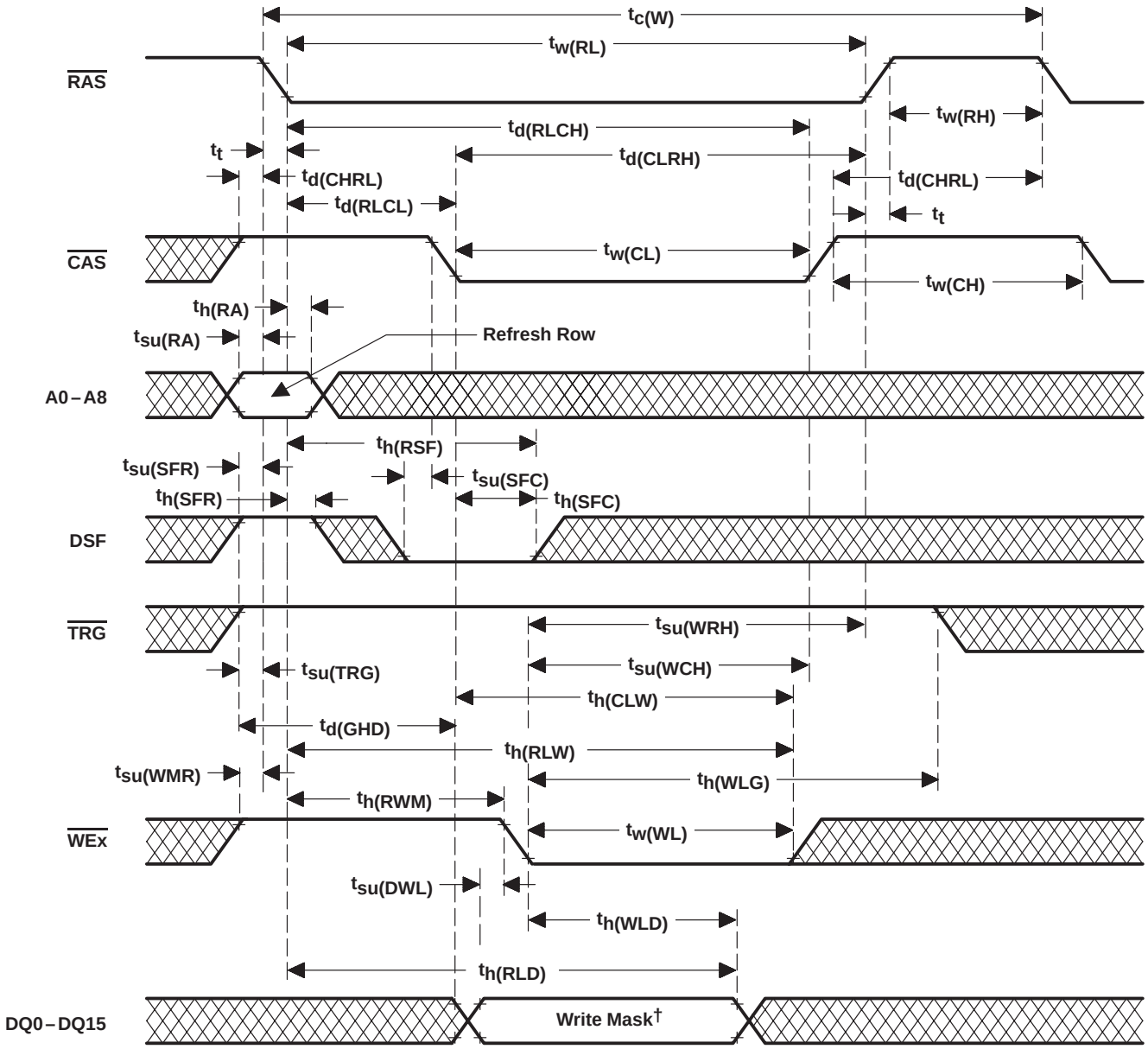

† Load-write-mask-register cycle puts the device into the persistent write-per-bit mode.

Figure 31. Load-Write-Mask-Register-Cycle Timing (Late-Write Load)

PARAMETER MEASUREMENT INFORMATION

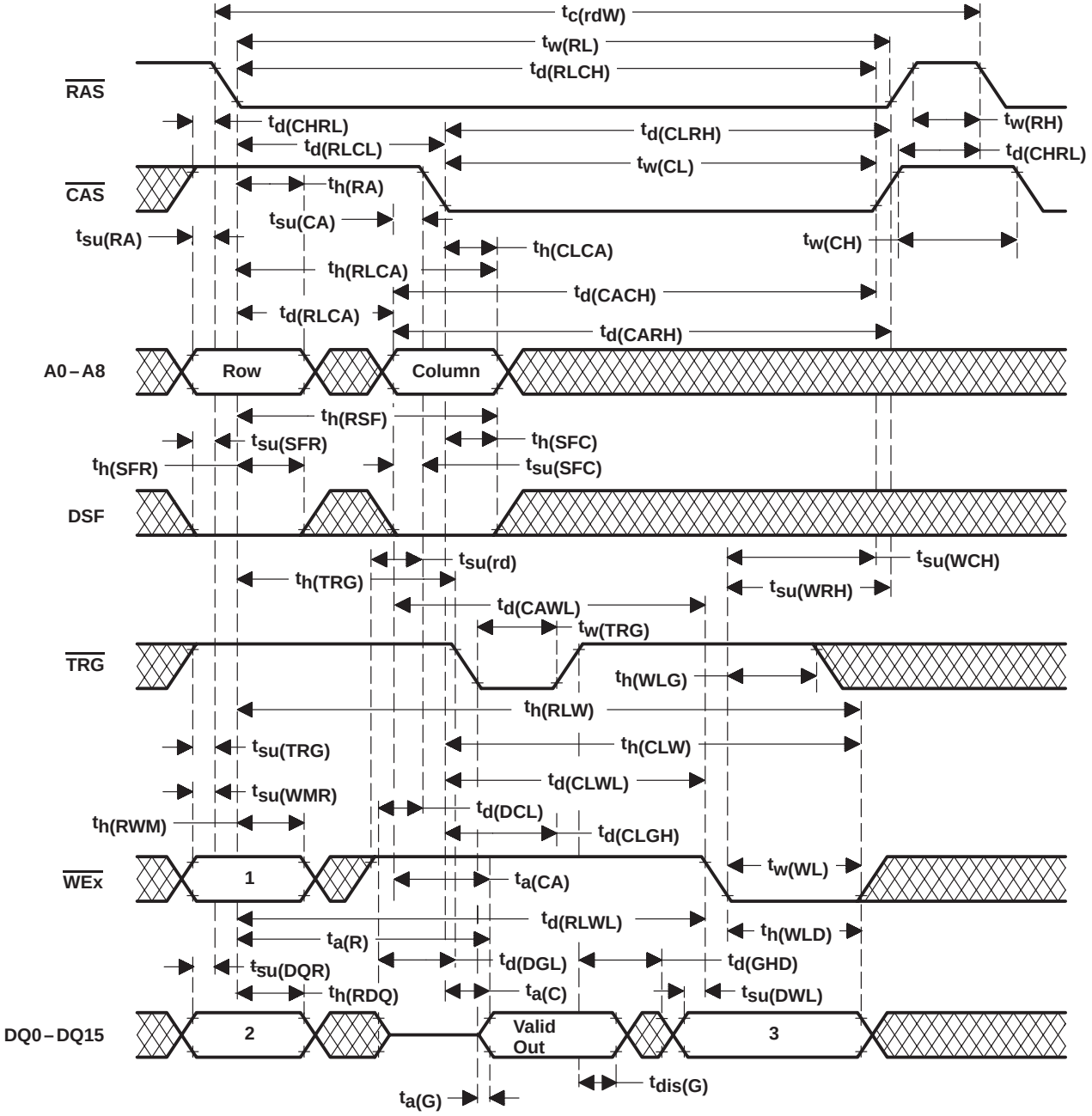

Figure 32. Read-Write-/Read-Modify-Write-Cycle Timing

Table 8. Read-Write-/Read-Modify-Write-Cycle State Table

CYCLE	STATE		
	1	2	3
Write operation (nonmasked)	H	Don't care	Valid data
Write operation with nonpersistent write-per-bit	L	Write mask	Valid data
Write operation with persistent write-per-bit	L	Don't care	Valid data

PARAMETER MEASUREMENT INFORMATION

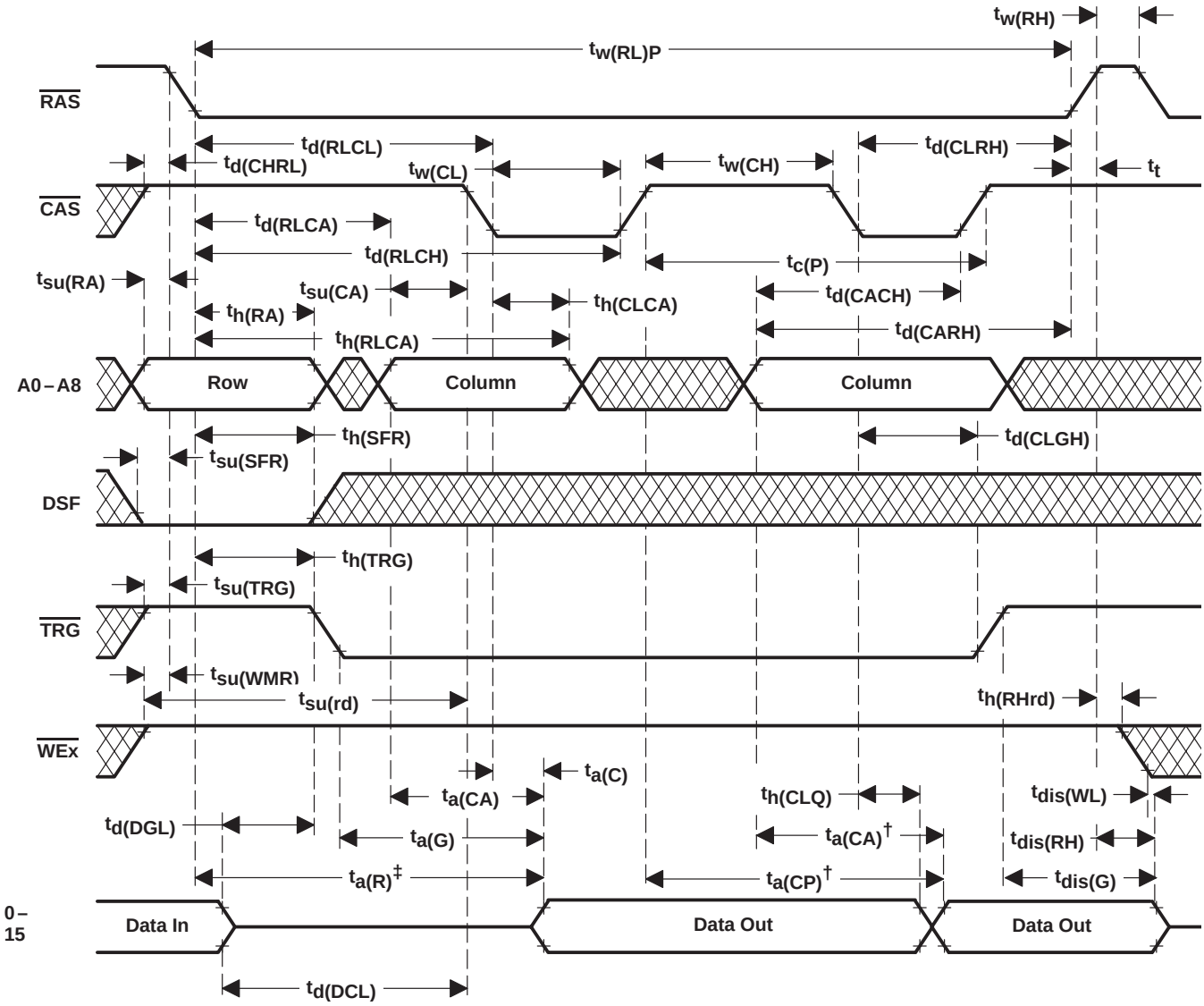

† Access time is $t_{a(CP)}$ or $t_{a(CA)}$ dependent.
‡ DQ outputs can go from the high-impedance state to an invalid-data state prior to the specified access time.

NOTE A: A write cycle or a read-modify-write cycle can be mixed with the read cycles as long as the write and read-modify-write timing specifications are not violated and the proper polarity of DSF is selected on the falling edge of $\overline{RAS}$ and $\overline{CAS}$ to select the desired write mode (normal, block write, etc.).

Figure 33. Enhanced-Page-Mode Read-Cycle Timing

PARAMETER MEASUREMENT INFORMATION

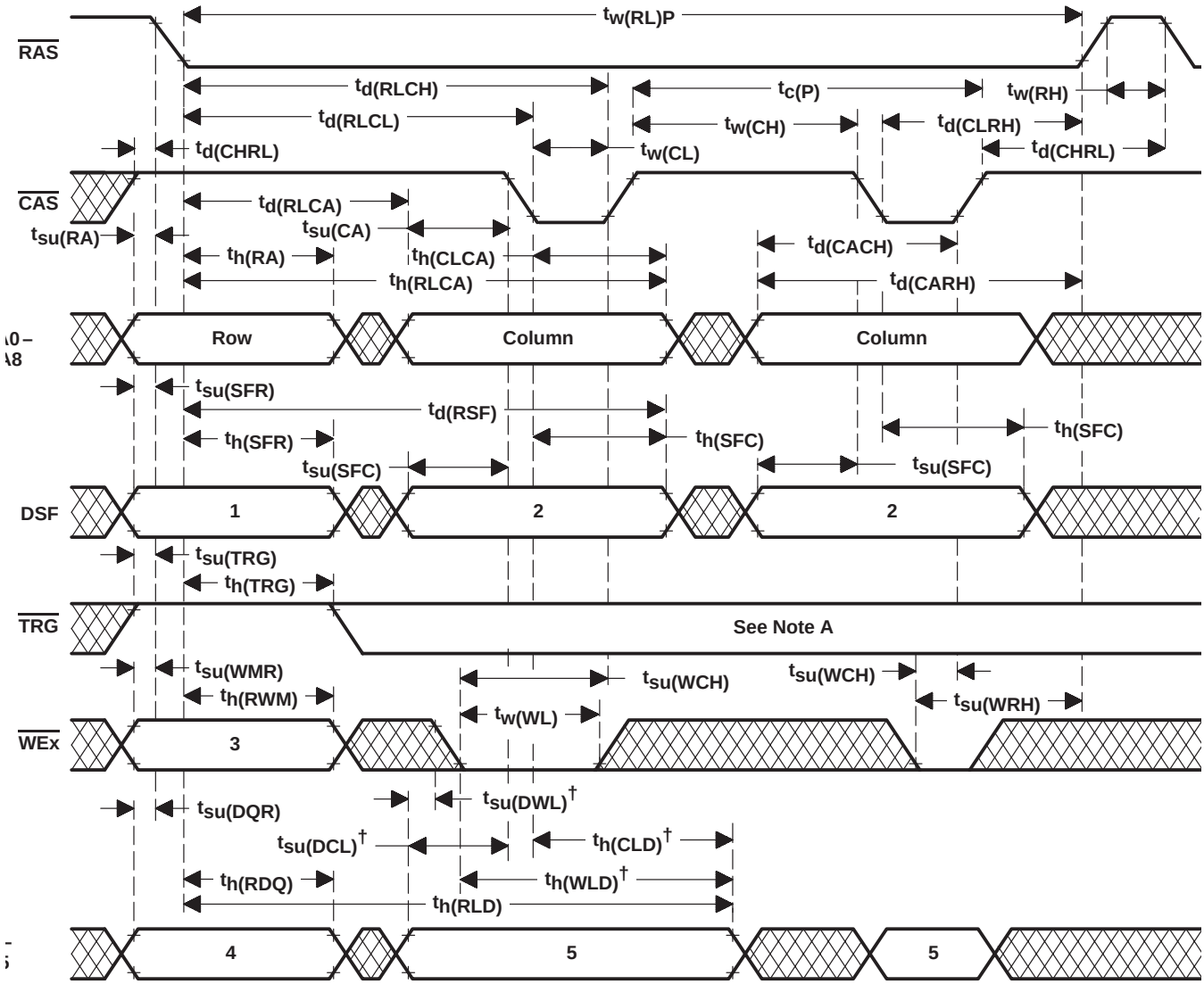

† Referenced to the first falling edge of WEx or the falling edge of CAS, whichever occurs later

NOTE A: A read cycle or a read-modify-write cycle can be intermixed with write cycles, observing read and read-modify-write timing specifications. To ensure page-mode cycle time, TRG must remain high throughout the entire page-mode operation if the late-write feature is used. If the early-write-cycle timing is used, the state of TRG is a don't care after the minimum period $t_{h(TRG)}$ from the falling edge of RAS.

Figure 34. Enhanced-Page-Mode Write-Cycle Timing

Table 9. Enhanced-Page-Mode Write-Cycle State Table

CYCLE	STATE				
	1	2	3	4	5
Write operation (nonmasked)	L	L	H	Don't care	Valid data
Write operation with nonpersistent write-per-bit	L	L	L	Write mask	Valid data
Write operation with persistent write-per-bit	L	L	L	Don't care	Valid data
Load-write-mask register on either the first falling edge of WEx or the falling edge of CAS, whichever occurs later.‡	H	L	H	Don't care	Write mask

‡ Load-write-mask-register cycle puts the device in the persistent write-per-bit mode. Column address at the falling edge of CAS is a don't care during this cycle.

PARAMETER MEASUREMENT INFORMATION

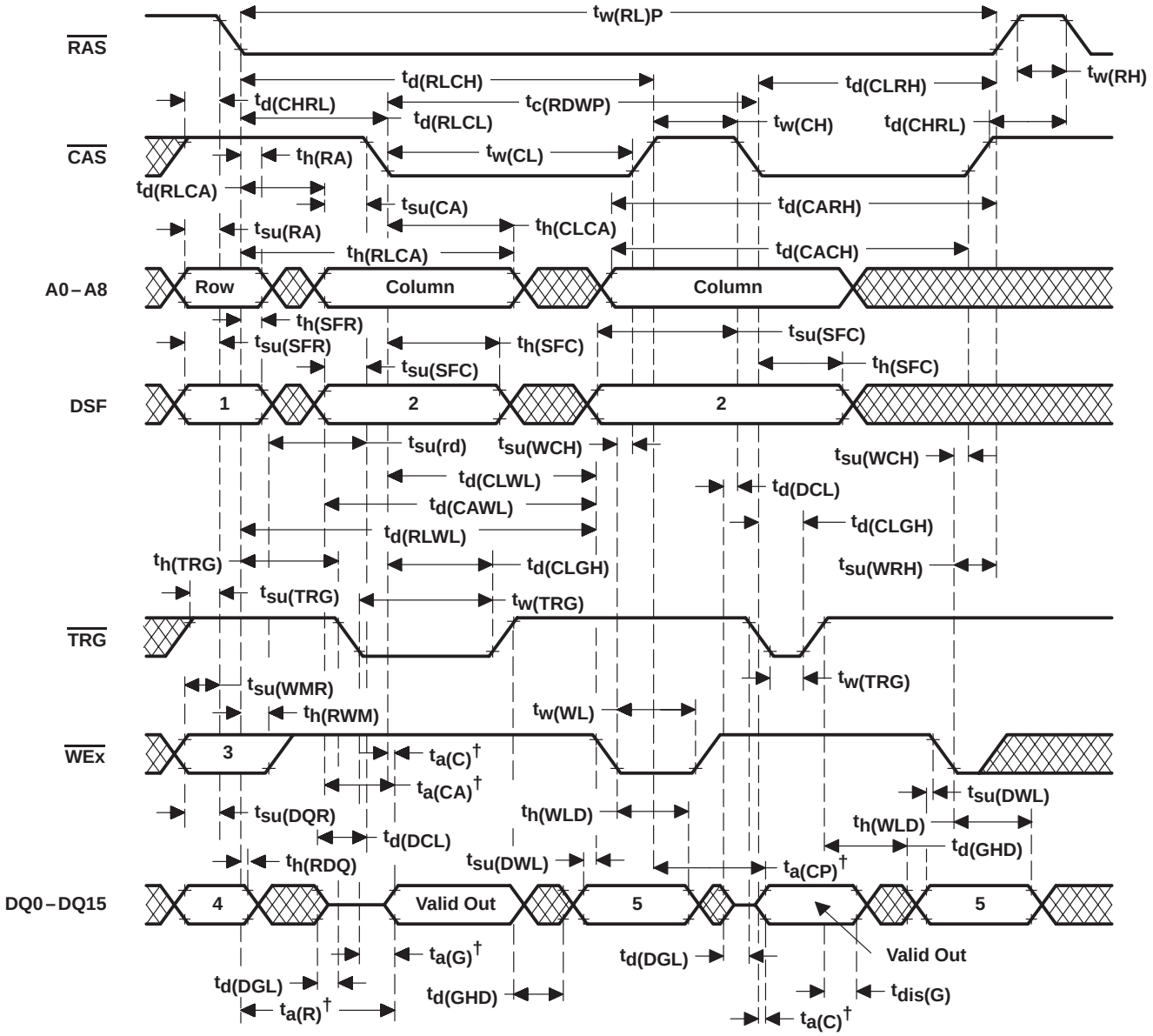

† Output can go from the high-impedance state to an invalid-data state prior to the specified access time.

NOTE A: A read or a write cycle can be intermixed with read-modify-write cycles as long as the read and write timing specifications are not violated.

Figure 35. Enhanced-Page-Mode Read-Modify-Write-Cycle Timing

Table 10. Enhanced-Page-Mode Read-Modify-Write-Cycle State Table

CYCLE	STATE				
	1	2	3	4	5
Write operation (nonmasked)	L	L	H	Don't care	Valid data
Write operation with nonpersistent write-per-bit	L	L	L	Write mask	Valid data
Write operation with persistent write-per-bit	L	L	L	Don't care	Valid data
Load-write-mask register on either the first falling edge of WEx or the falling edge of CAS, whichever occurs later.‡	H	L	H	Don't care	Write mask

‡ Load-write-mask-register cycle sets the device to the persistent write-per-bit mode. Column address at the falling edge of $\overline{CAS}$ is a don't care during this cycle.

PARAMETER MEASUREMENT INFORMATION

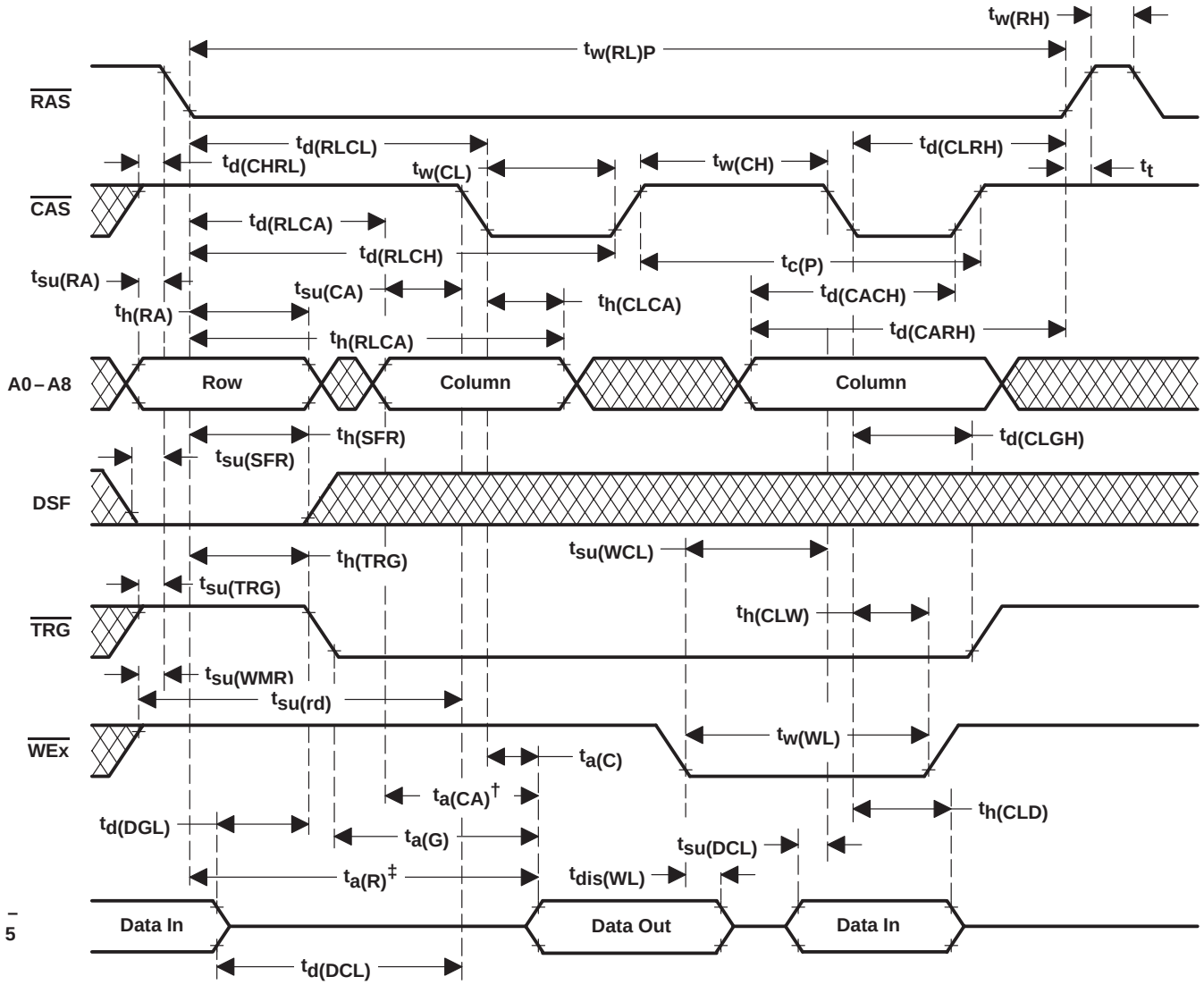

† Access time is $t_{a(CP)}$ or $t_{a(CA)}$ dependent.
‡ Output can go from the high-impedance state to an invalid-data state prior to the specified access time.

NOTE A: A write cycle or a read-modify-write cycle can be mixed with the read cycles as long as the write and read-modify-write timing specifications are not violated and the proper polarity of DSF is selected on the falling edge of $\overline{RAS}$ and $\overline{CAS}$ to select the desired write mode (normal, block write, etc.).

Figure 36. Enhanced-Page-Mode Read-/Write-Cycle Timing

PARAMETER MEASUREMENT INFORMATION

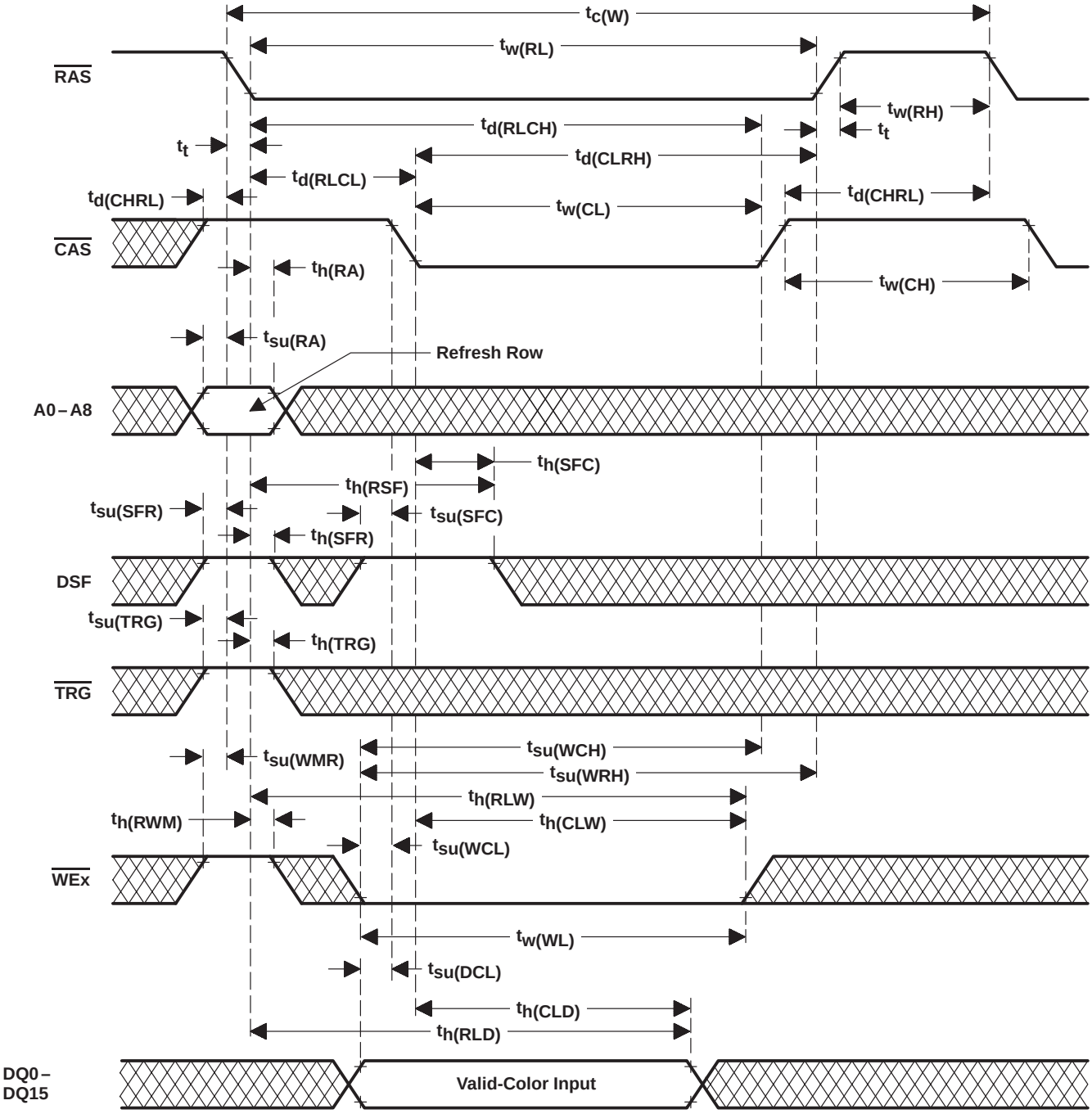

Figure 37. Load-Color-Register-Cycle Timing (Early-Write Load)

PARAMETER MEASUREMENT INFORMATION

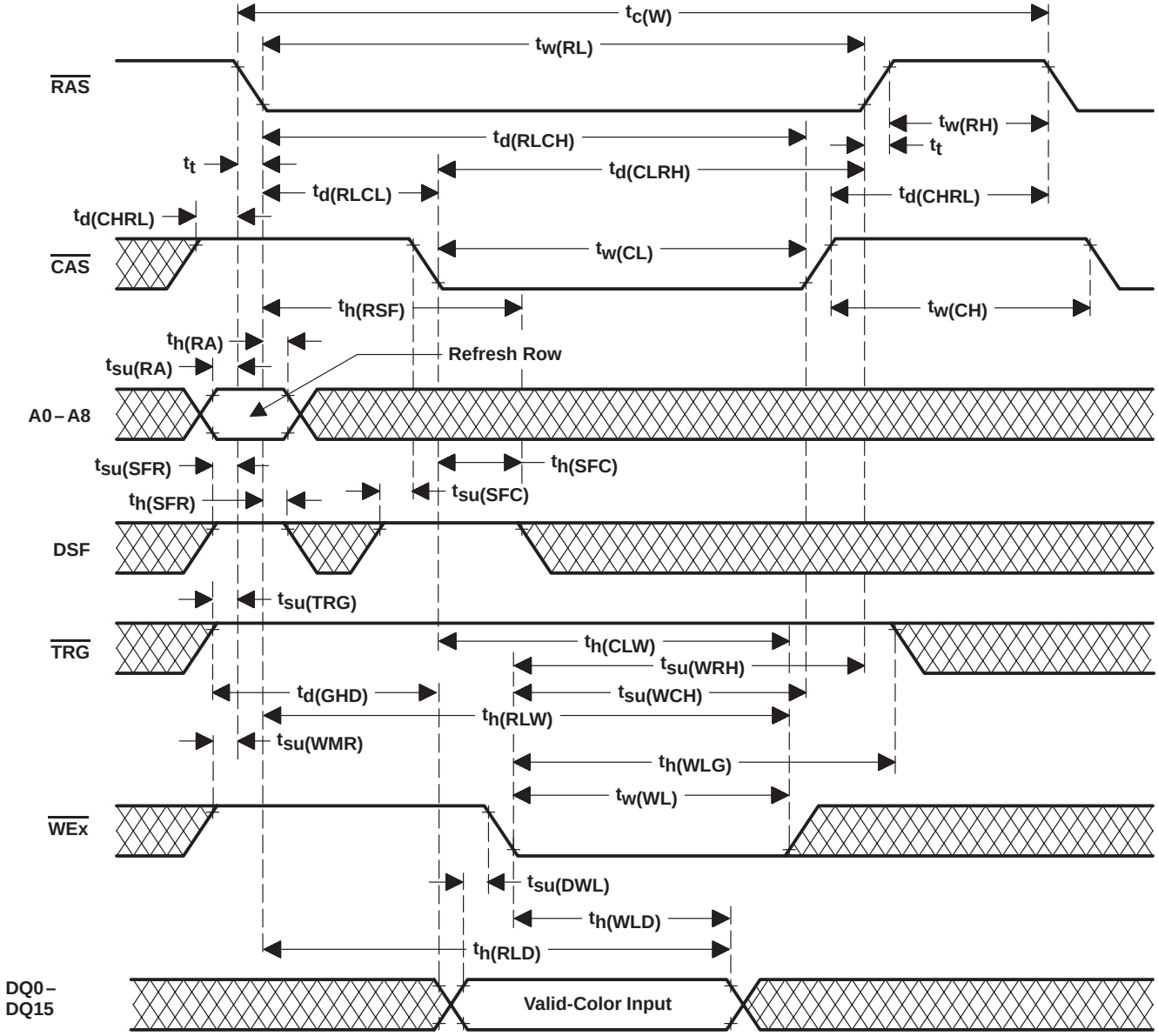

Figure 38. Load-Color-Register-Cycle Timing (Late-Write Load)

PARAMETER MEASUREMENT INFORMATION

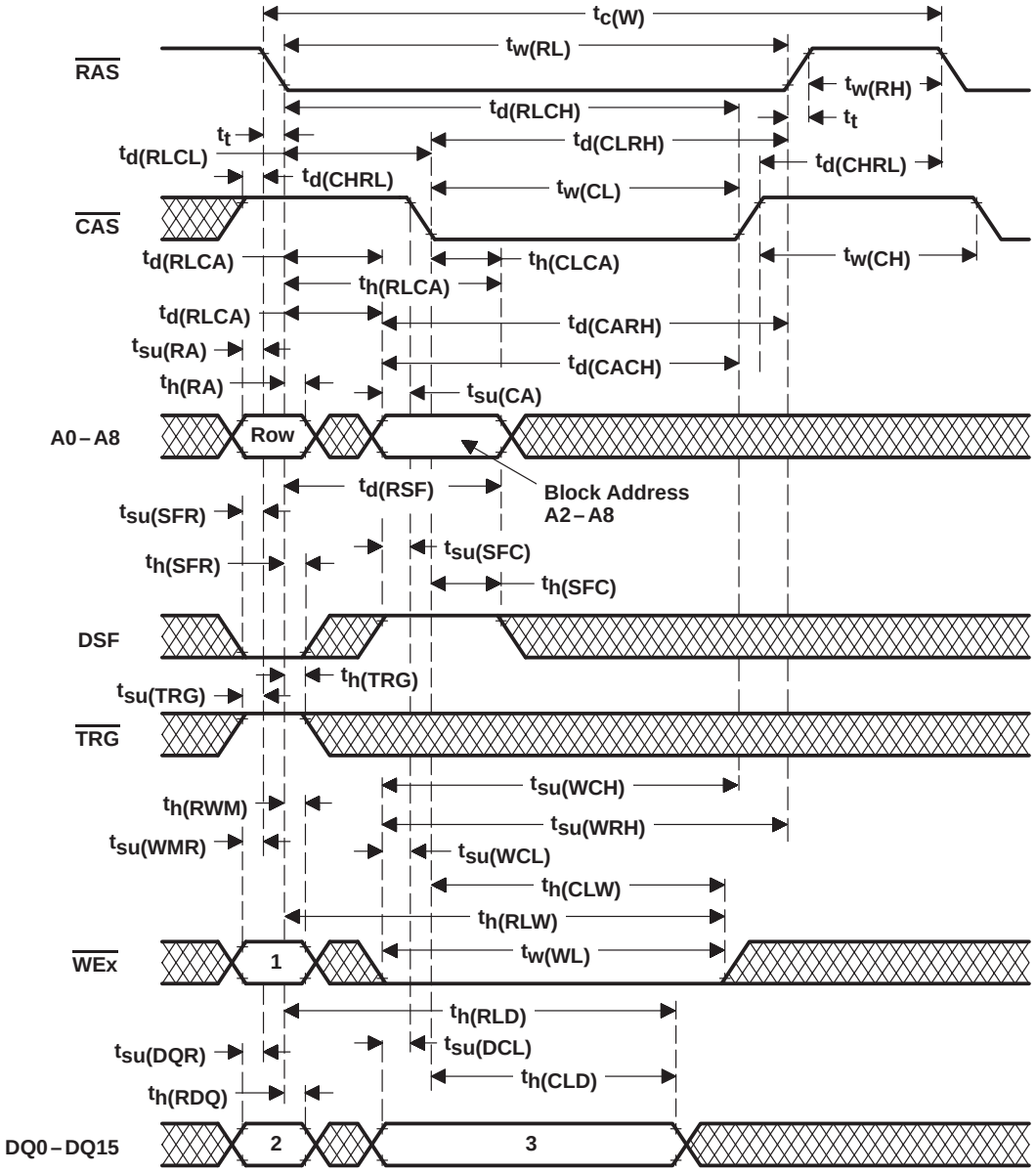

Figure 39. Block-Write-Cycle Timing (Early Write)

Table 11. Block-Write-Cycle State Table

CYCLE	STATE		
	1	2	3
Block-write operation (nonmasked)	H	Don't care	Column mask
Block-write operation with nonpersistent write-per-bit	L	Write mask	Column mask
Block-write operation with persistent write-per-bit	L	Don't care	Column mask

Write-mask data 0: I/O write disable
1: I/O write enable
Column-mask data DQi – DQi + 3 (i = 0, 4, 8, 12) 0: column write disable
1: column write enable

Example:
DQ0 — column 0 (address A1 = 0, A0 = 0)
DQ1 — column 1 (address A1 = 0, A0 = 1)
DQ2 — column 2 (address A1 = 1, A0 = 0)
DQ3 — column 3 (address A1 = 1, A0 = 1)

PARAMETER MEASUREMENT INFORMATION

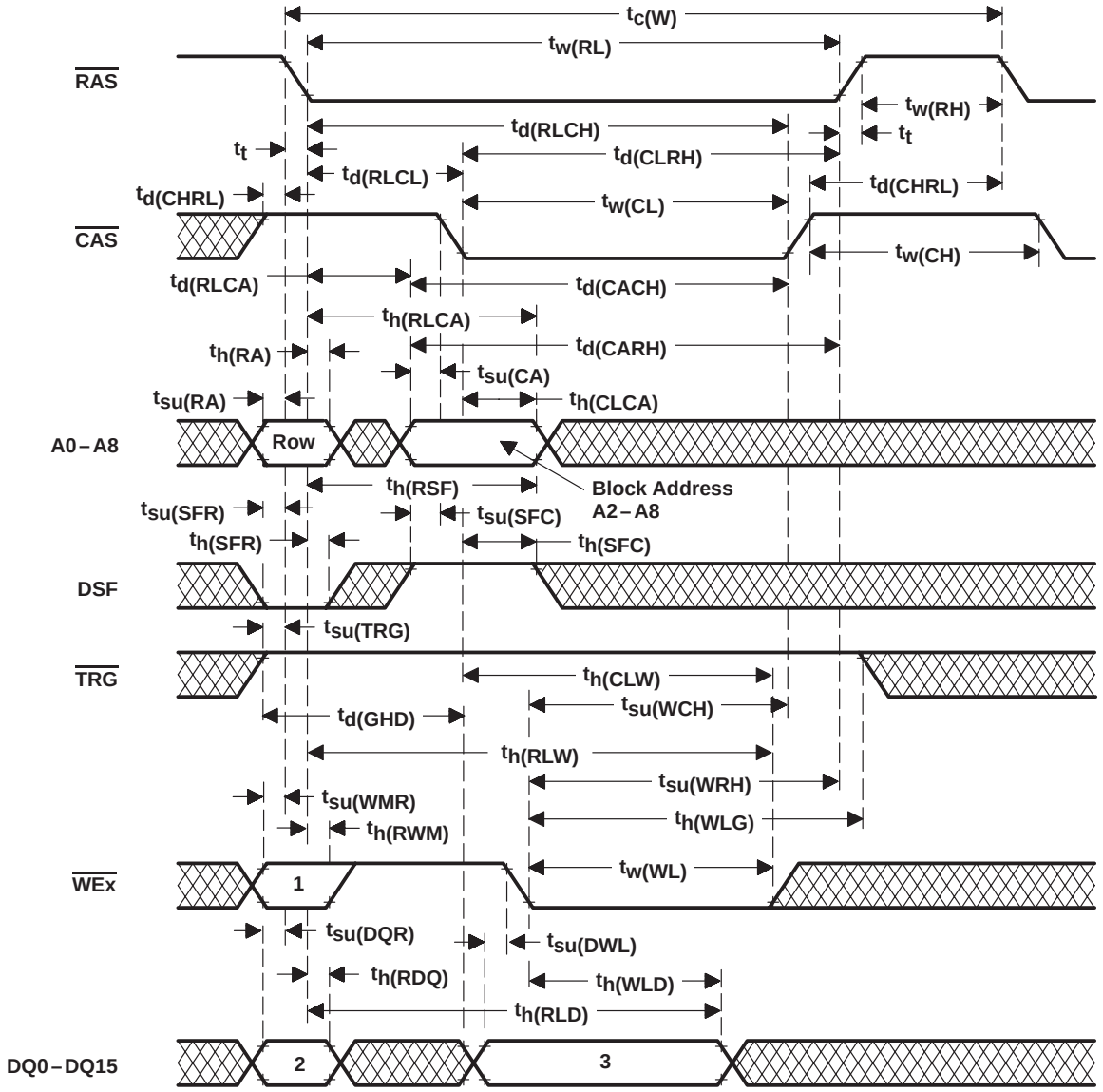

Figure 40. Block-Write-Cycle Timing (Late Write)

Table 12. Block-Write-Cycle State Table

CYCLE	STATE		
	1	2	3
Block-write operation (nonmasked)	H	Don't care	Column mask
Block-write operation with nonpersistent write-per-bit	L	Write mask	Column mask
Block-write operation with persistent write-per-bit	L	Don't care	Column mask

Write-mask data 0: I/O write disable
1: I/O write enable
Column-mask data DQi – DQi + 3 (i = 0, 4, 8, 12) 0: column write disable
1: column write enable

Example:
DQ0 — column 0 (address A1 = 0, A0 = 0)
DQ1 — column 1 (address A1 = 0, A0 = 1)
DQ2 — column 2 (address A1 = 1, A0 = 0)
DQ3 — column 3 (address A1 = 1, A0 = 1)

PARAMETER MEASUREMENT INFORMATION

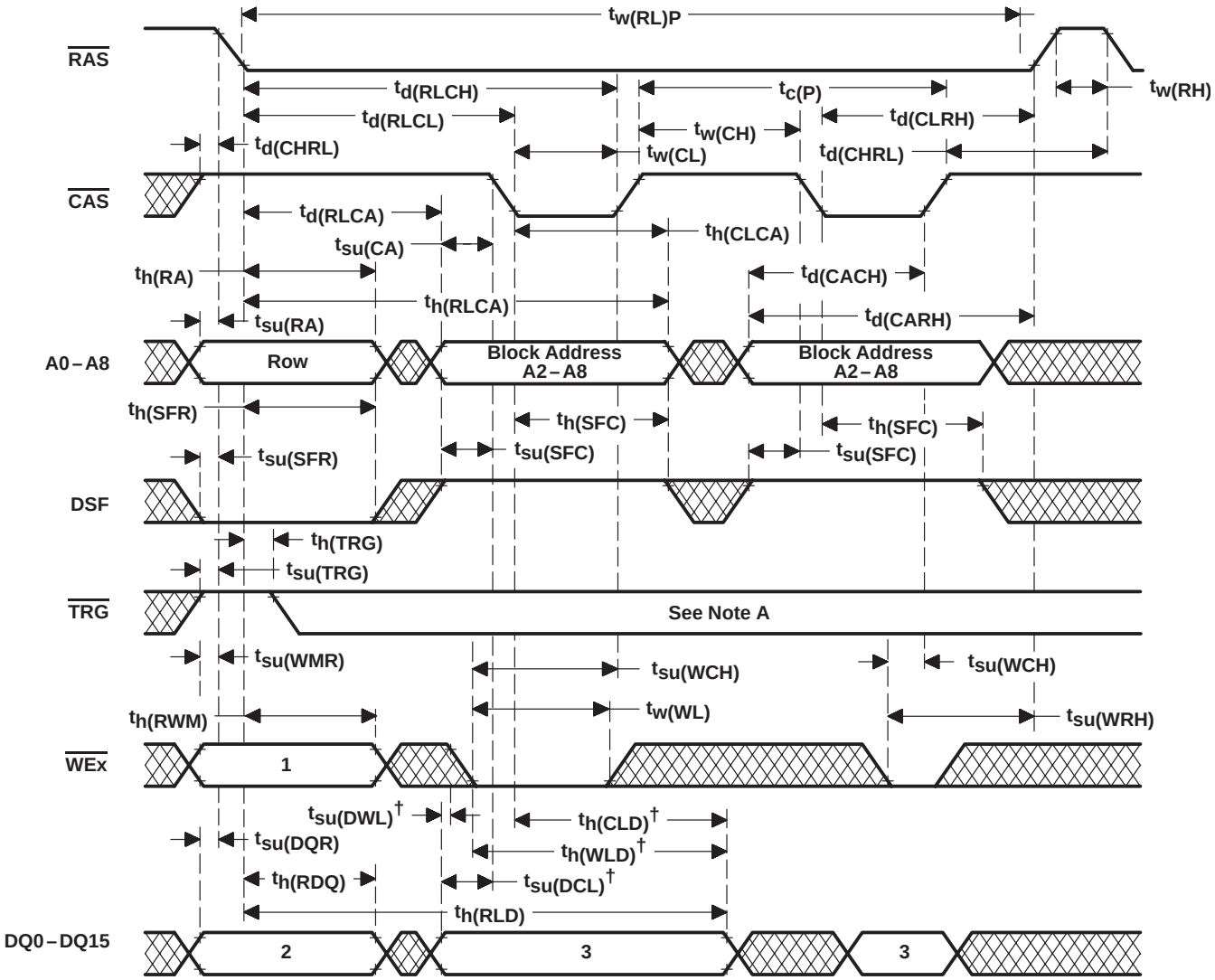

† Referenced to the first falling edge of $\overline{\text{WEx}}$ or the falling edge of $\overline{\text{CAS}}$, whichever occurs later

NOTE A: To assure page-mode cycle time, $\overline{\text{TRG}}$ must remain high throughout the entire page-mode operation if the late-write feature is used. If the early write-cycle timing is used, the state of $\overline{\text{TRG}}$ is a don't care after the minimum period $t_{h(\overline{TRG})}$ from the falling edge of $\overline{\text{RAS}}$.

Figure 41. Enhanced-Page-Mode Block-Write-Cycle Timing

Table 13. Enhanced-Page-Mode Block-Write-Cycle State Table

CYCLE	STATE		
	1	2	3
Block-write operation (nonmasked)	H	Don't care	Column mask
Block-write operation with nonpersistent write-per-bit	L	Write mask	Column mask
Block-write operation with persistent write-per-bit	L	Don't care	Column mask

Write-mask data 0: I/O write disable
1: I/O write enable

Column-mask data DQi – DQi + 3 (i = 0, 4, 8, 12) 0: column write disable
1: column write enable

Example:
DQ0 — column 0 (address A1 = 0, A0 = 0)
DQ1 — column 1 (address A1 = 0, A0 = 1)
DQ2 — column 2 (address A1 = 1, A0 = 0)
DQ3 — column 3 (address A1 = 1, A0 = 1)

PARAMETER MEASUREMENT INFORMATION

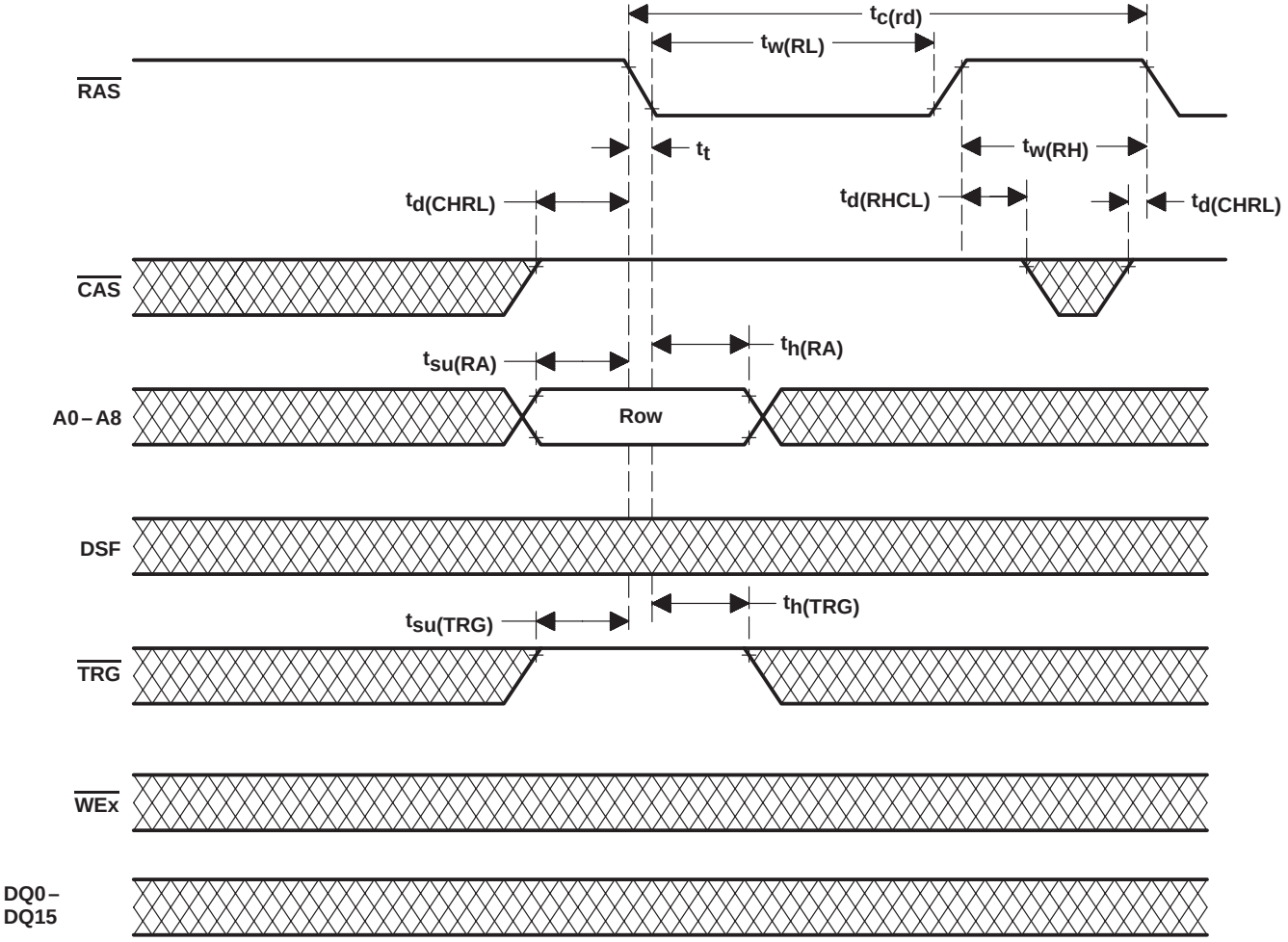

Figure 42. $\overline{\text{RAS}}$-Only Refresh-Cycle Timing

PARAMETER MEASUREMENT INFORMATION

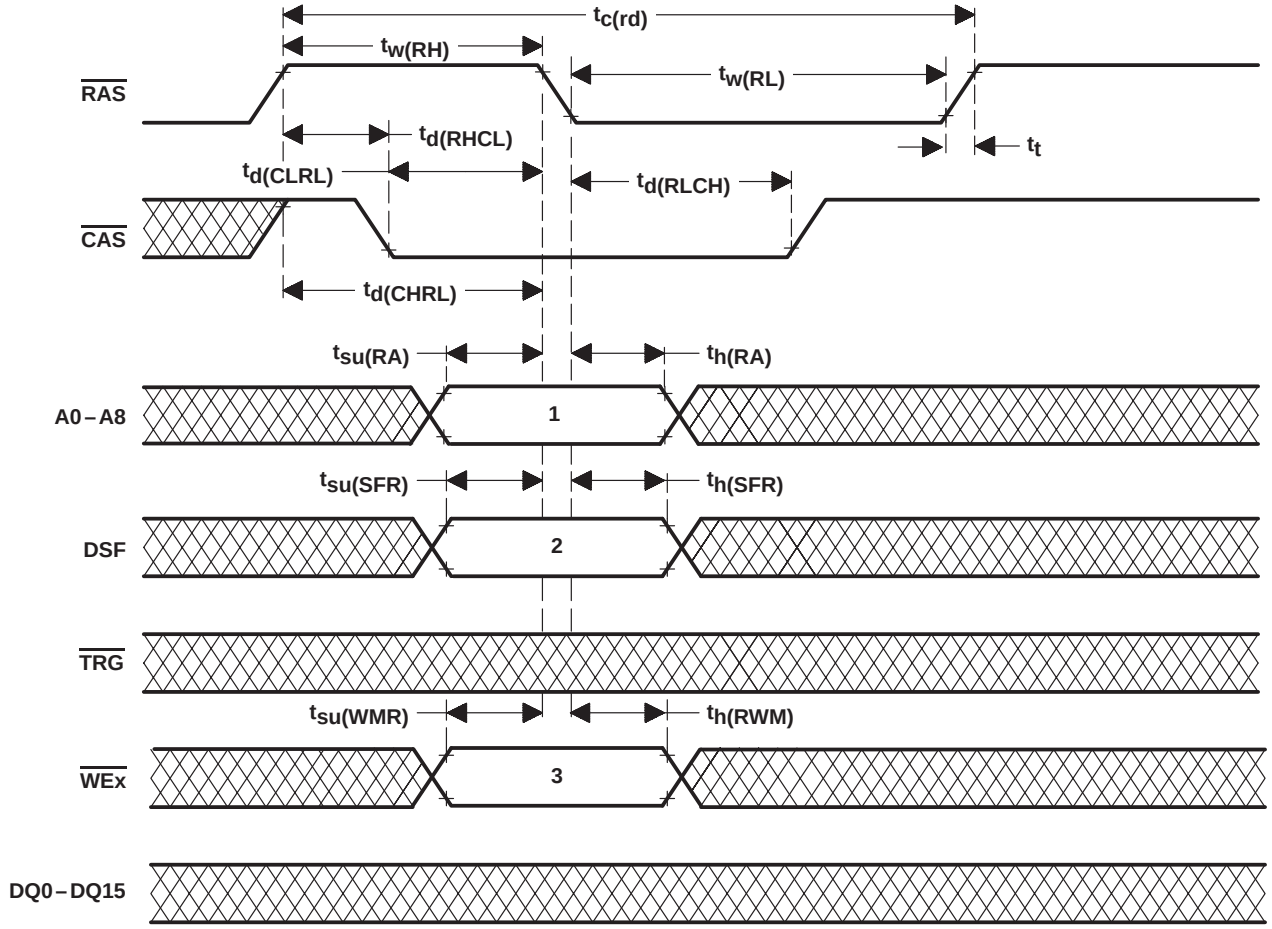

Figure 43. CBR-Refresh-Cycle Timing

Table 14. CBR-Cycle State Table

CYCLE	STATE		
	1	2	3
$\overline{\text{CBR}}$ refresh with option reset	Don't care	L	H
CBR refresh with no reset	Don't care	H	H
CBR refresh with stop-point set and no reset	Stop address	H	L

PARAMETER MEASUREMENT INFORMATION

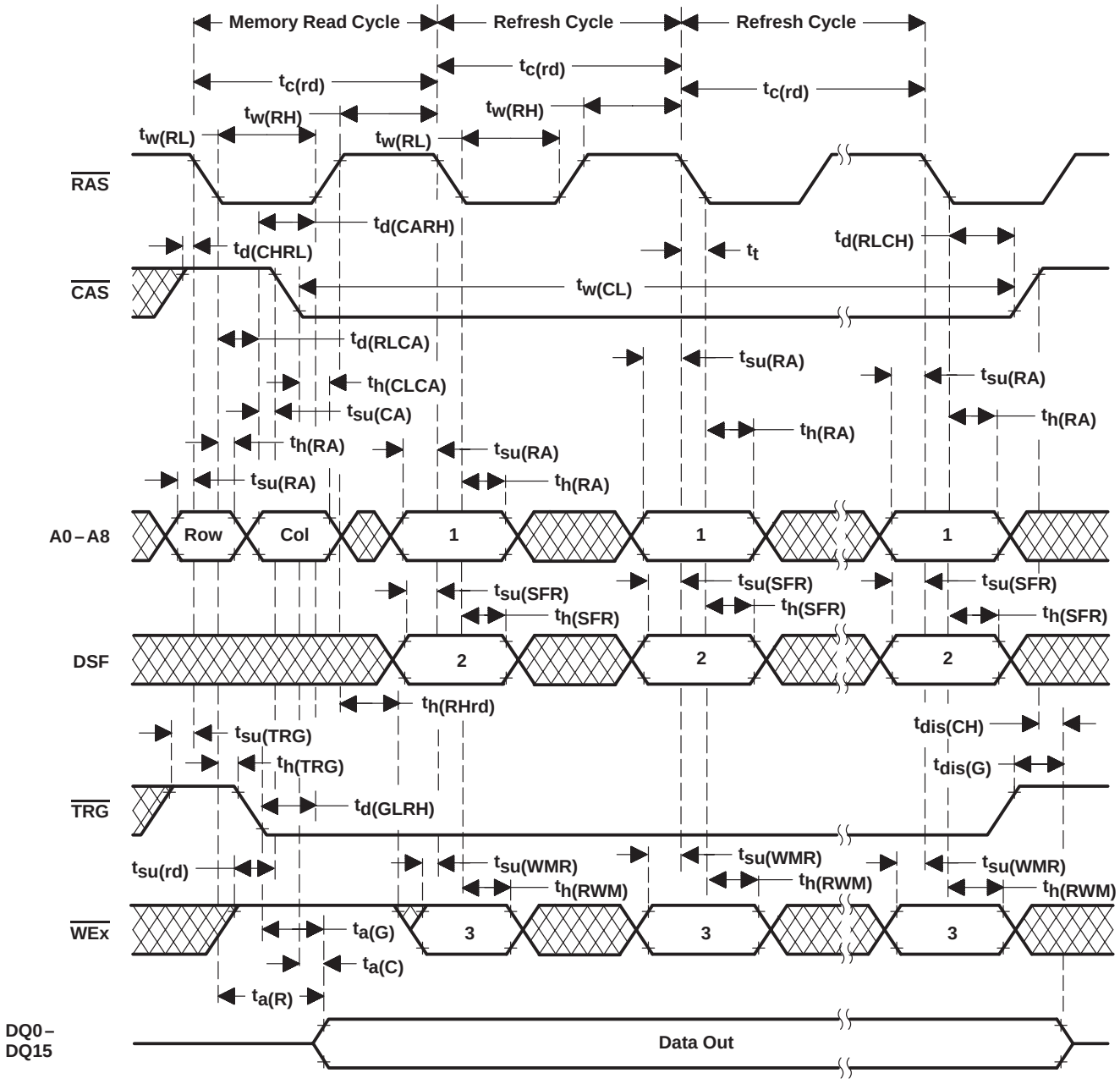

Figure 44. Hidden-Refresh-Cycle Timing

Table 15. Hidden-Refresh-Cycle State Table

CYCLE	STATE		
	1	2	3
CBR refresh with option reset	Don't care	L	H
CBR refresh with no reset	Don't care	H	H
CBR refresh with stop-point set and no option reset	Stop address	H	L

PARAMETER MEASUREMENT INFORMATION

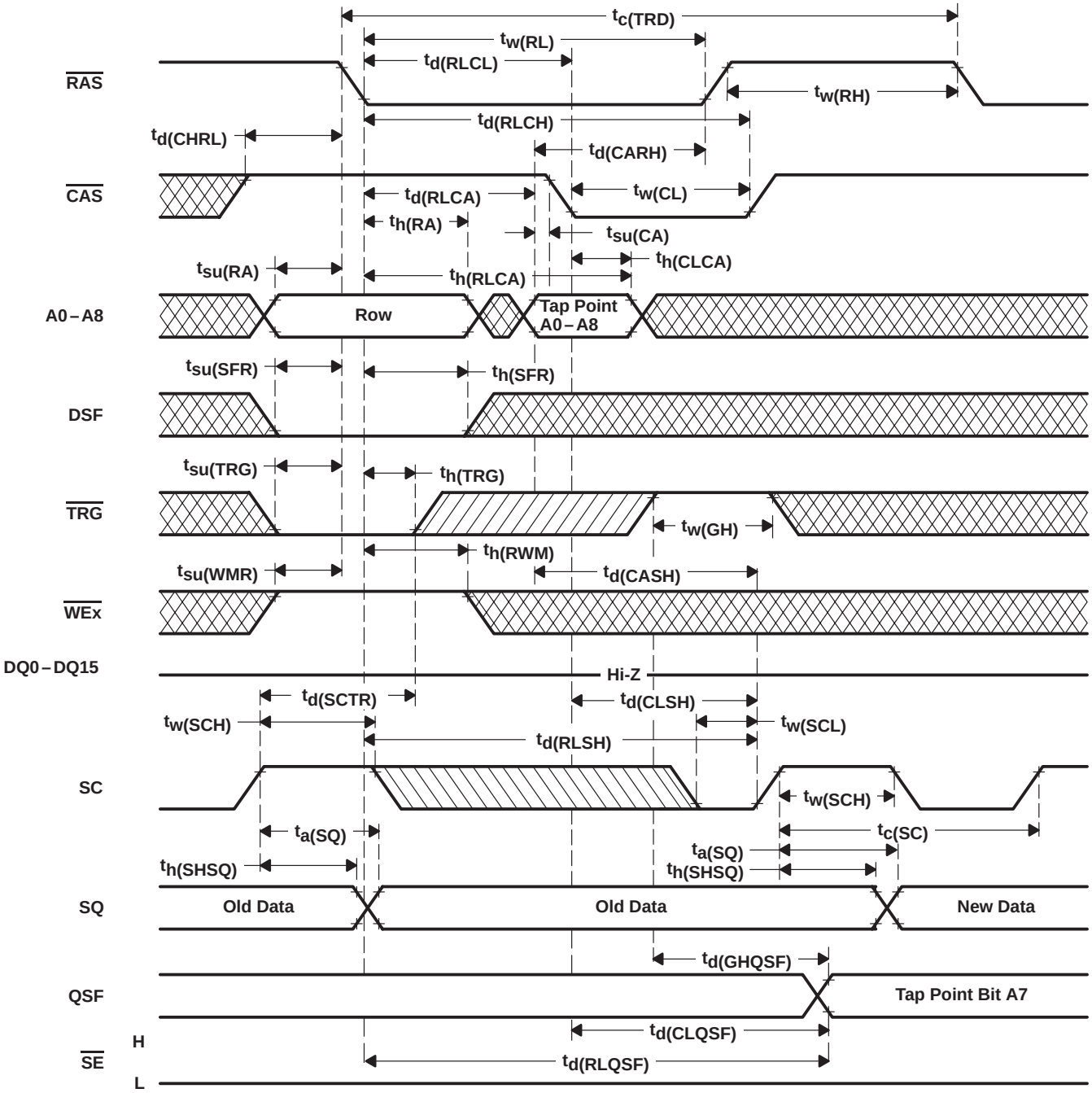

NOTES: A. DQ outputs remain in the high-impedance state for the entire memory-to-data-register transfer cycle. The memory-to-data-register transfer cycle is used to load the data registers in parallel from the memory array. The 256 locations in each data register are written into from the 256 corresponding columns of the selected row.

B. Once data is transferred into the data registers, the SAM is in the serial-read mode (i.e., the SQ is enabled), allowing data to be shifted out of the registers. Also, the first bit to read from the data register after $\overline{TRG}$ has gone high must be activated by a positive transition of SC.

C. A0 – A7: register tap point; A8: identifies the DRAM row half

D. Early-load operation is defined as $t_{h(TRG)}$ min < $t_{h(TRG)}$ < $t_{d(RLTH)}$ min.

Figure 45. Full-Register-Transfer Read Timing, Early-Load Operations

PARAMETER MEASUREMENT INFORMATION

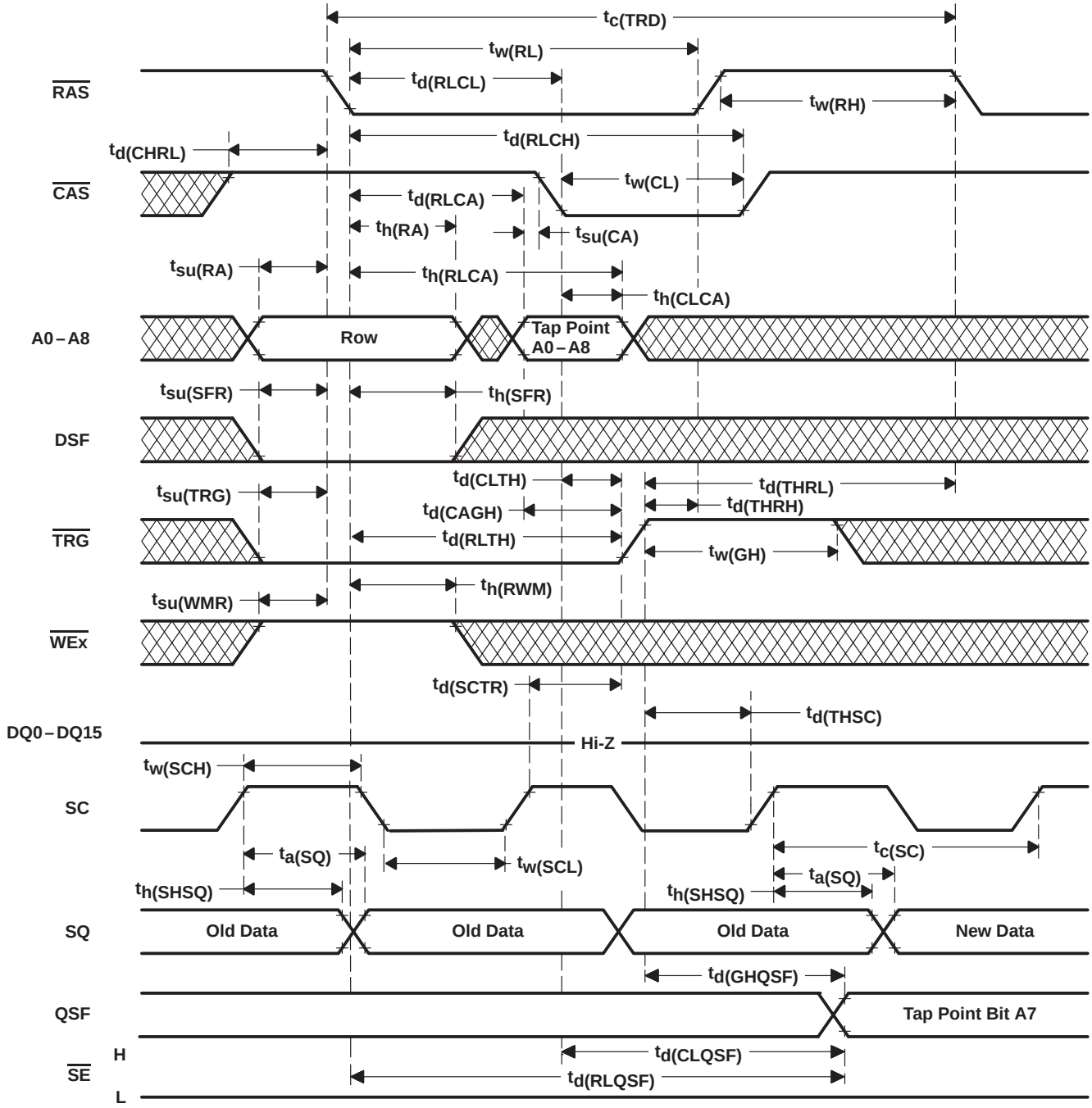

NOTES: A. DQ outputs remain in the high-impedance state for the entire memory-to-data-register transfer cycle. The memory-to-data-register transfer cycle is used to load the data registers in parallel from the memory array. The 256 locations in each data register are written into from the 256 corresponding columns of the selected row.

B. Once data is transferred into the data registers, the SAM is in the serial-read mode (i.e., the SQ is enabled), allowing data to be shifted out of the registers. Also, the first bit to read from the data register after $\overline{TRG}$ has gone high must be activated by a positive transition of SC.

C. A0 – A7: register tap point; A8: identifies the DRAM row half

D. Late load operation is defined as $t_{d(THRH)} < 0$ ns.

Figure 46. Full-Register-Transfer Read Timing, Real-Time Load Operation/Late-Load Operation

PARAMETER MEASUREMENT INFORMATION

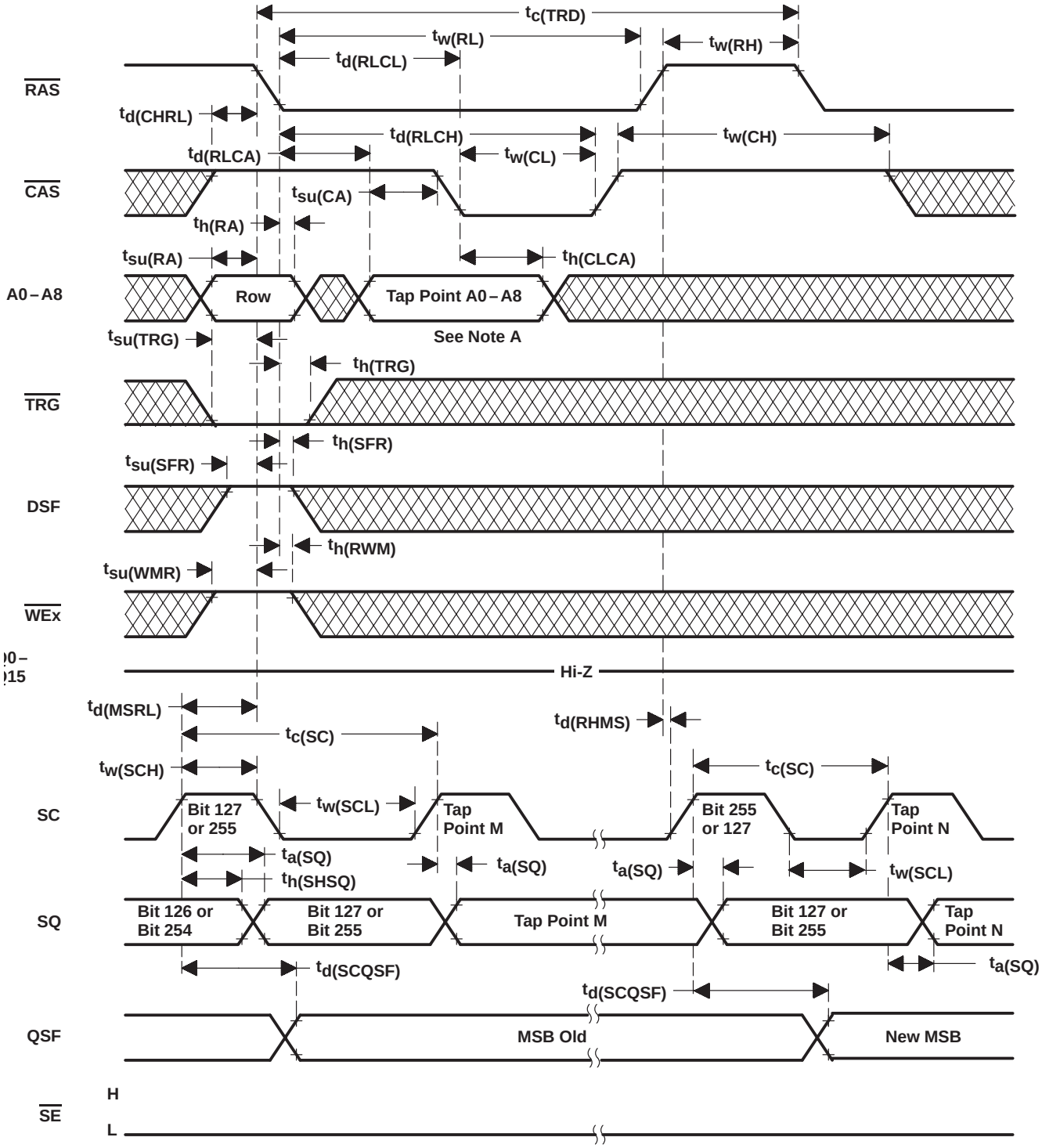

NOTE A: A0 – A6: tap point of the given half; A7: don't care; A8: identifies the DRAM row half

Figure 47. Split-Register-Transfer Read Timing

PARAMETER MEASUREMENT INFORMATION

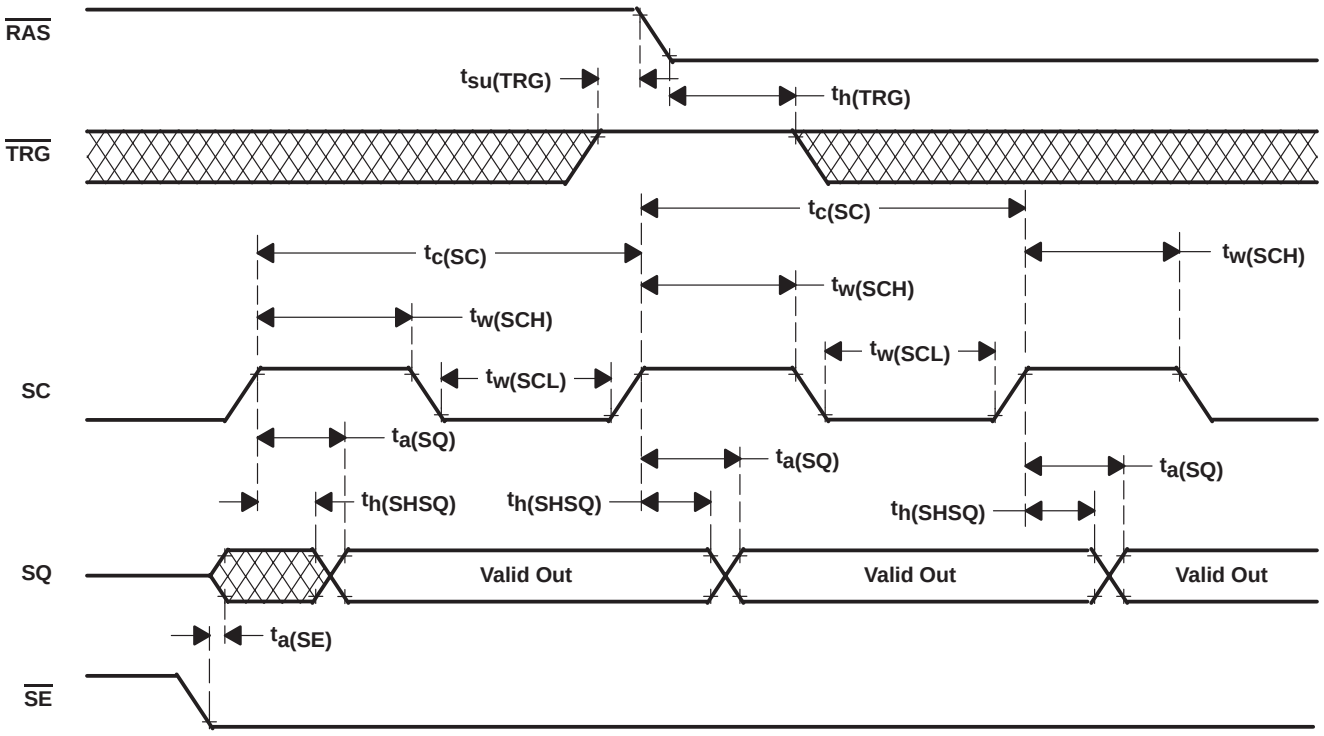

NOTES: A. While reading data through the serial-data register, $\overline{TRG}$ is a don't care, but $\overline{TRG}$ must be held high when $\overline{RAS}$ goes low. This is to avoid the initiation of a register-data-transfer operation.

B. The serial-data-out cycle is used to read data out of the data registers. Before data can be read via SQ, the device must be put into the read mode by performing a transfer-read cycle.

Figure 48. Serial-Read-Cycle Timing ($\overline{SE} = V_{IL}$)

PARAMETER MEASUREMENT INFORMATION

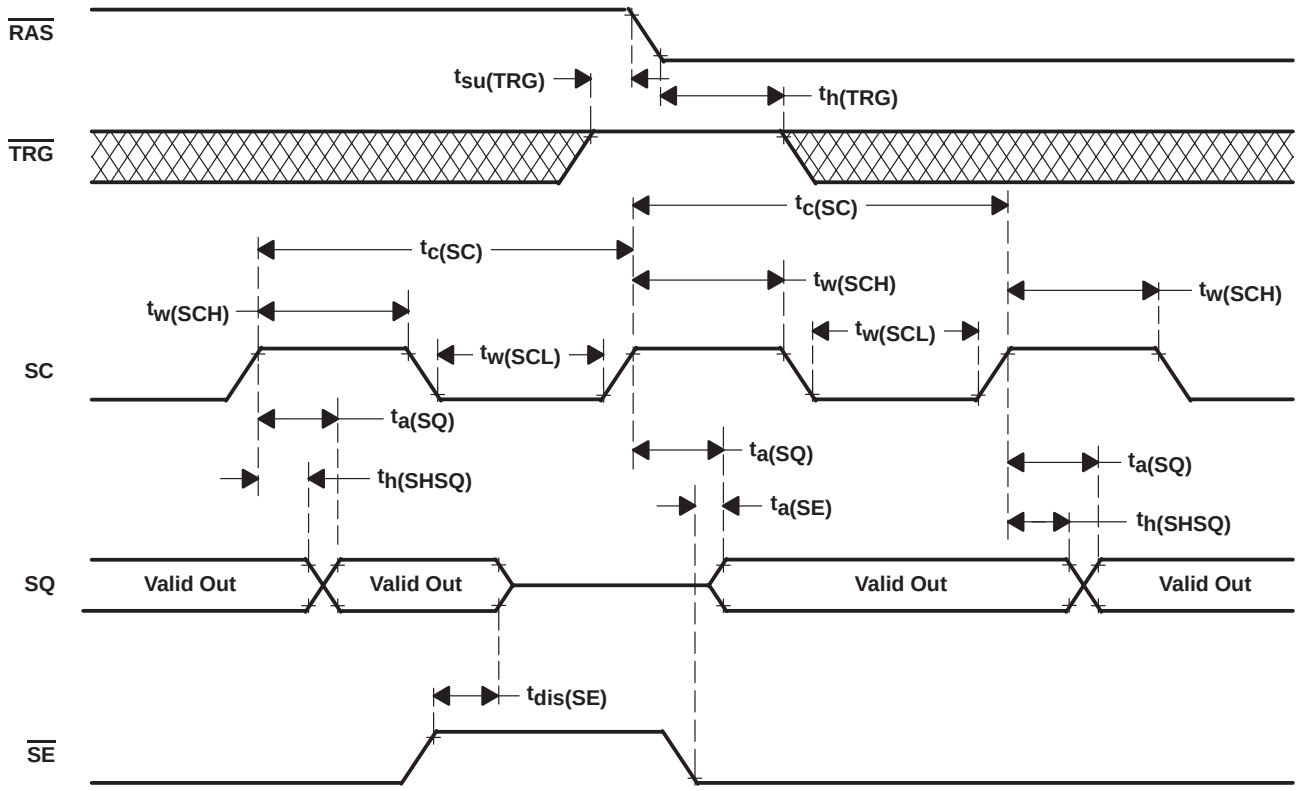

NOTES: A. While reading data through the serial-data register, $\overline{TRG}$ is a don't care, but $\overline{TRG}$ must be held high when $\overline{RAS}$ goes low. This is to avoid the initiation of a register-data-transfer operation.

B. The serial-data-out cycle is used to read data out of the data registers. Before data can be read via SQ, the device must be put into the read mode by performing a transfer-read cycle.

Figure 49. Serial-Read Timing ($\overline{SE}$-Controlled Read)

PARAMETER MEASUREMENT INFORMATION

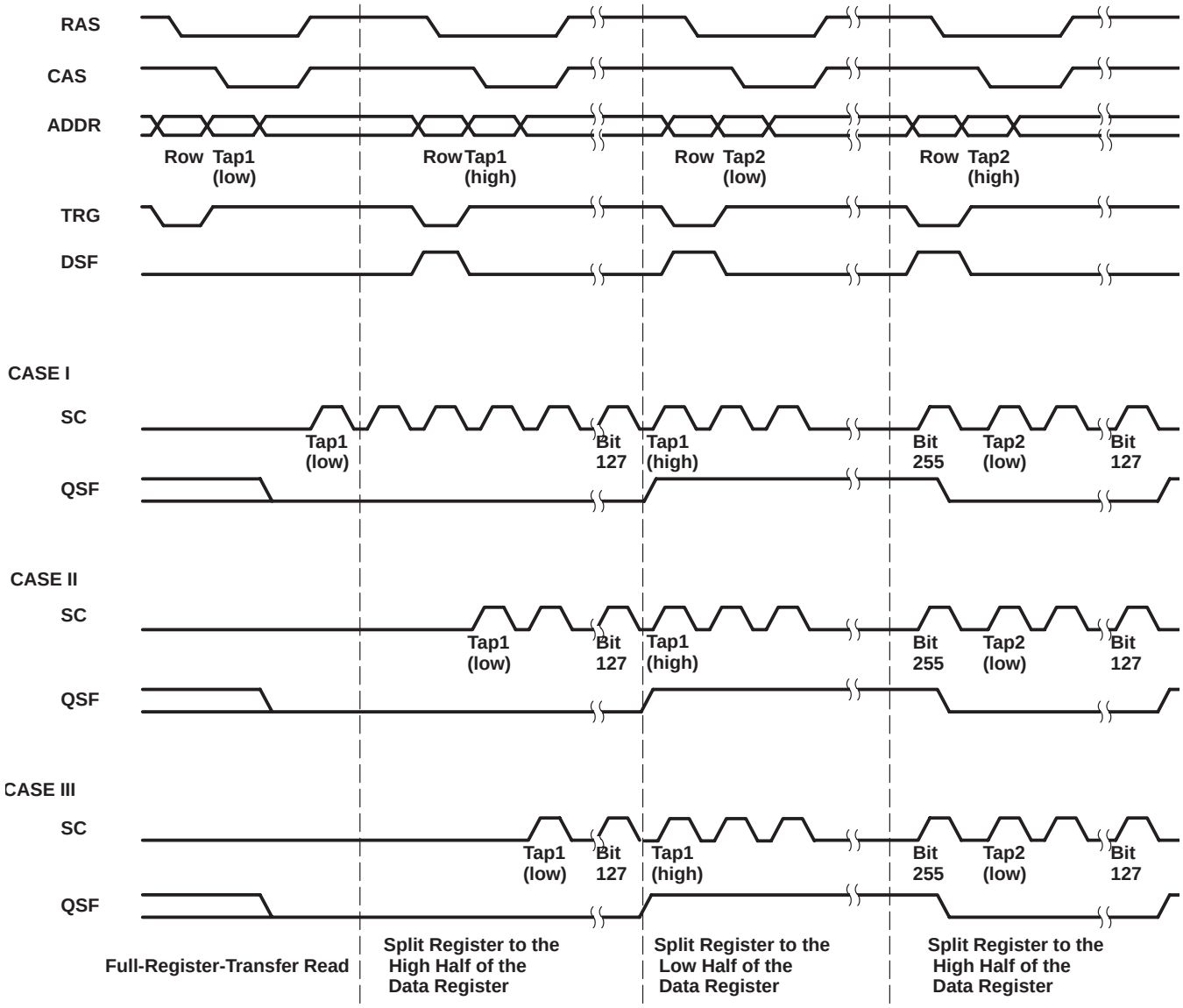

NOTES: A. To achieve proper split-register operation, a full-register-transfer read should be performed before the first split-register-transfer cycle. This is necessary to initialize the data register and the starting tap location. First serial access can begin after the full-register-transfer read cycle (CASE I), during the first split-register-transfer cycle (CASE II), or even after the first split-register-transfer cycle (CASE III). There is no minimum requirement of SC clock between the full-register-transfer read cycle and the first split-register cycle.

B. A split-register transfer into the inactive half is not allowed until $t_{d(MSRL)}$ is met. $t_{d(MSRL)}$ is the minimum delay time between the rising edge of the serial clock of the last bit (bit 127 or 255) and the falling edge of $\overline{RAS}$ of the split-register-transfer cycle into the inactive half. After the $t_{d(MSRL)}$ is met, the split-register transfer into the inactive half must also satisfy the minimum $t_{d(RHMS)}$ requirement. $t_{d(RHMS)}$ is the minimum delay time between the rising edge of $\overline{RAS}$ of the split-register-transfer cycle into the inactive half and the rising edge of the serial clock of the last bit (bit 127 or 255).

Figure 50. Split-Register Operating Sequence

MECHANICAL DATA

GB (S-CPGA-P68) **CERAMIC PIN GRID ARRAY PACKAGE**

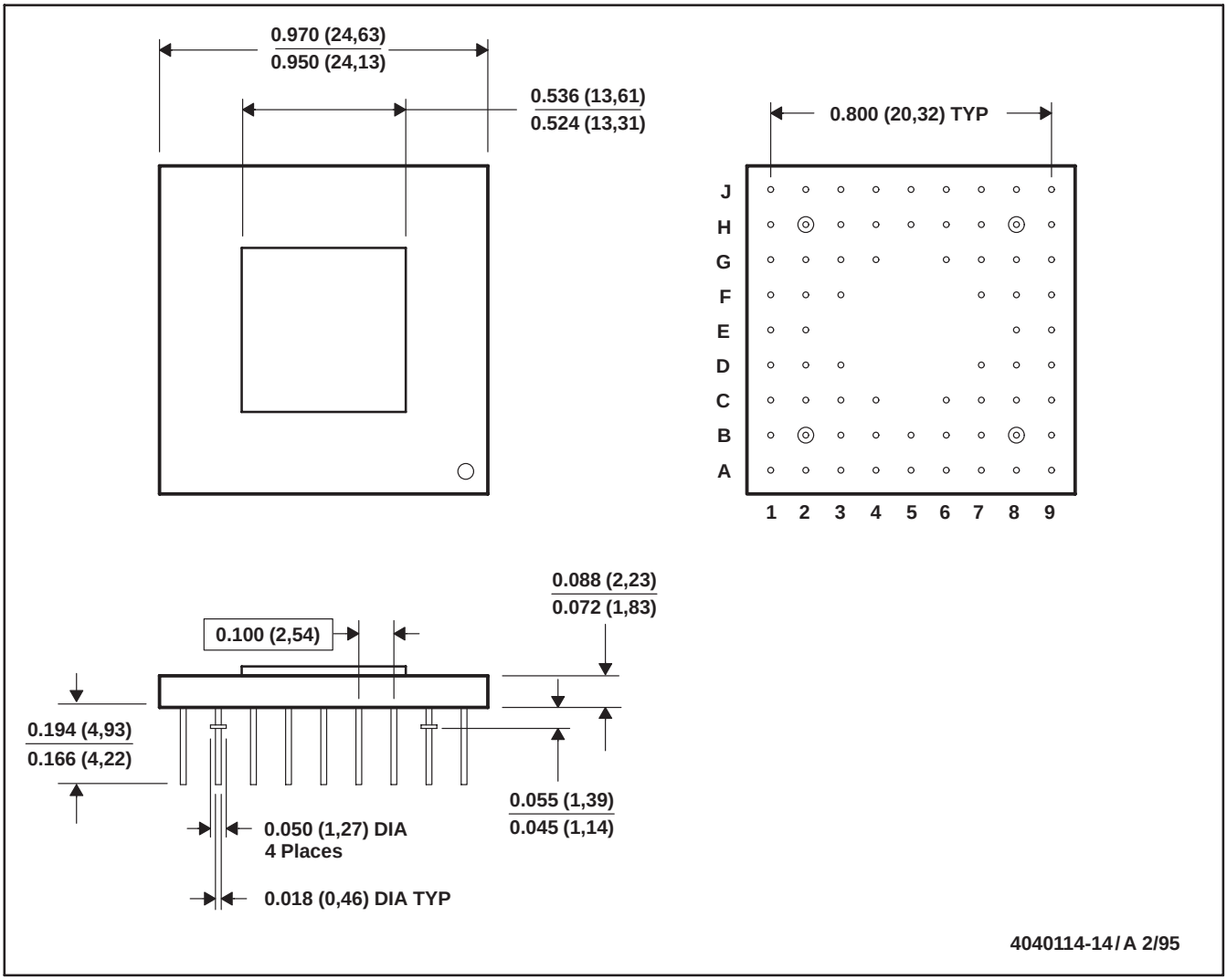

NOTES:
A. All linear dimensions are in inches (millimeters).
B. This drawing is subject to change without notice.
C. Index mark may appear on top or bottom depending on package vendor.
D. Pins are located within 0.005 (0,13) radius of true position relative to each other at maximum material condition and within 0.015 (0,38) radius relative to the center of the ceramic.
E. This package can be hermetically sealed with metal lids or with ceramic lids using glass frit.
F. The pins can be gold plated or solder dipped.
G. Falls within MIL-STD-1835 CMGA1-PN and CMGA13-PN and JEDEC MO-067AA and MO-066AA, respectively

MECHANICAL DATA

HKC (R-CDFP-F64) **CERAMIC DUAL FLATPACK WITH TIE BAR**

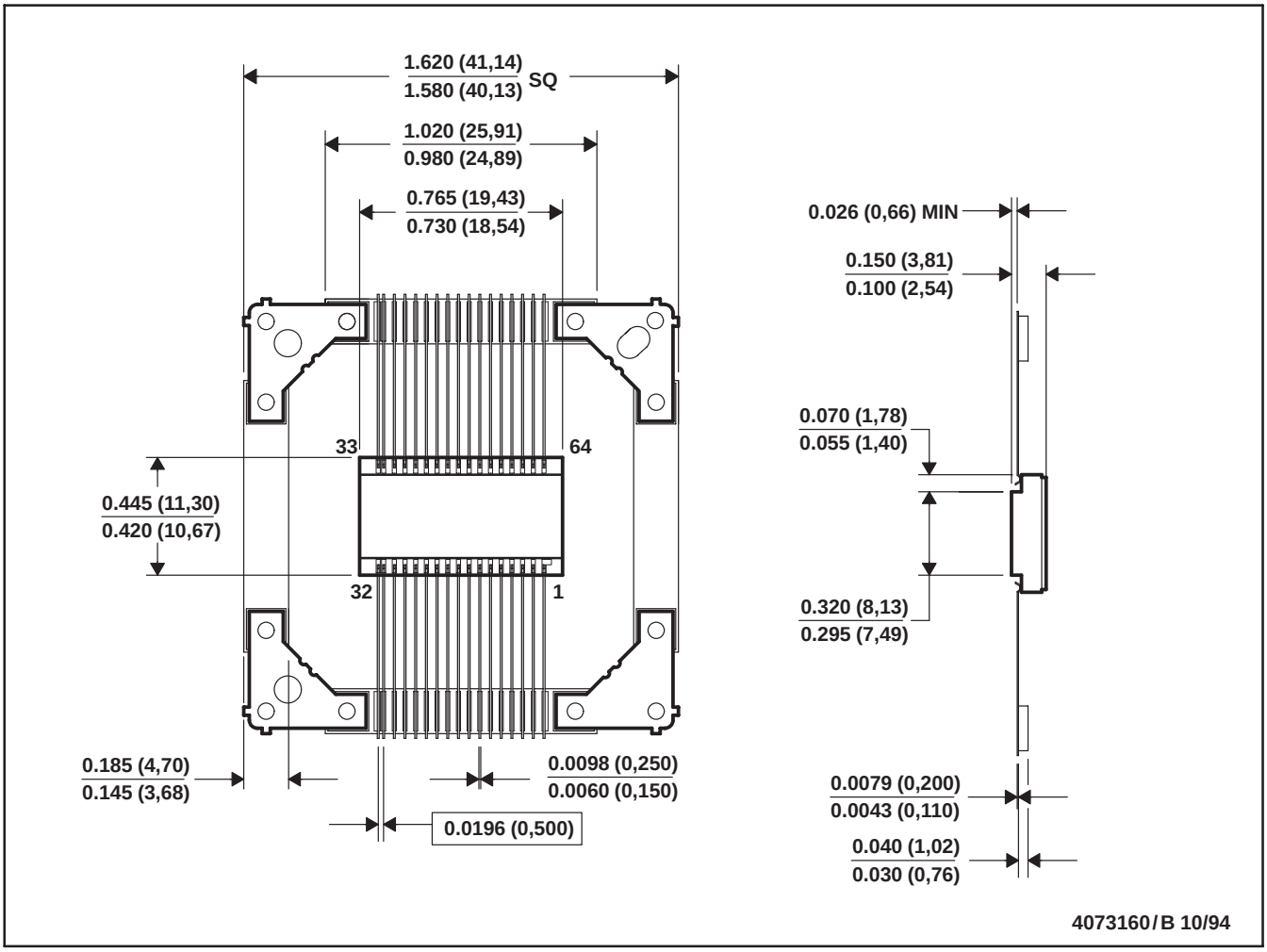

NOTES:
A. All linear dimensions are in inches (millimeters).
B. This drawing is subject to change without notice.
C. This package can be hermetically sealed with a metal lid.
D. The terminals are gold plated.
E. All leads not shown for clarity purposes.

device symbolization

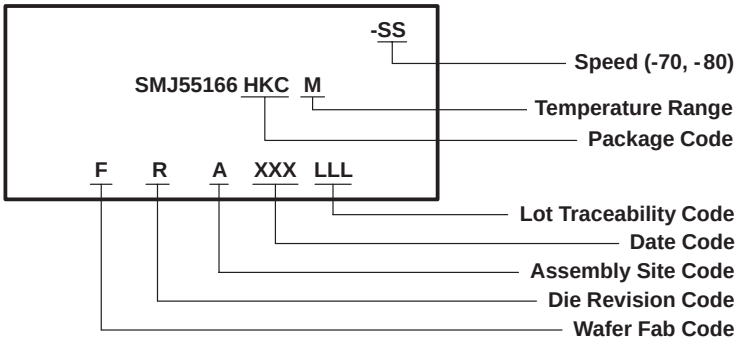

IMPORTANT NOTICE

Texas Instruments and its subsidiaries (TI) reserve the right to make changes to their products or to discontinue any product or service without notice, and advise customers to obtain the latest version of relevant information to verify, before placing orders, that information being relied on is current and complete. All products are sold subject to the terms and conditions of sale supplied at the time of order acknowledgement, including those pertaining to warranty, patent infringement, and limitation of liability.

TI warrants performance of its semiconductor products to the specifications applicable at the time of sale in accordance with TI's standard warranty. Testing and other quality control techniques are utilized to the extent TI deems necessary to support this warranty. Specific testing of all parameters of each device is not necessarily performed, except those mandated by government requirements.

CERTAIN APPLICATIONS USING SEMICONDUCTOR PRODUCTS MAY INVOLVE POTENTIAL RISKS OF DEATH, PERSONAL INJURY, OR SEVERE PROPERTY OR ENVIRONMENTAL DAMAGE ("CRITICAL APPLICATIONS"). TI SEMICONDUCTOR PRODUCTS ARE NOT DESIGNED, AUTHORIZED, OR WARRANTED TO BE SUITABLE FOR USE IN LIFE-SUPPORT DEVICES OR SYSTEMS OR OTHER CRITICAL APPLICATIONS. INCLUSION OF TI PRODUCTS IN SUCH APPLICATIONS IS UNDERSTOOD TO BE FULLY AT THE CUSTOMER'S RISK.

In order to minimize risks associated with the customer's applications, adequate design and operating safeguards must be provided by the customer to minimize inherent or procedural hazards.

TI assumes no liability for applications assistance or customer product design. TI does not warrant or represent that any license, either express or implied, is granted under any patent right, copyright, mask work right, or other intellectual property right of TI covering or relating to any combination, machine, or process in which such semiconductor products or services might be or are used. TI's publication of information regarding any third party's products or services does not constitute TI's approval, warranty or endorsement thereof.

Copyright © 1998, Texas Instruments Incorporated