molex
one company › a world of innovation

This document was generated on 05/21/2010

PLEASE CHECK WWW.MOLEX.COM FOR LATEST PART INFORMATION

Part Number: 0459848161

Status: Active

Overview: extreme_lphpower

Description: 1.27mm (.050"), 12.00mm (.472") Pitch, EXTreme LPHPower™ Receptacle Header, Right Angle, 8 Power Contacts, 32 Signal Contacts, Select Gold (Au) Plating, for 3.18mm (.125") Thick PC Board

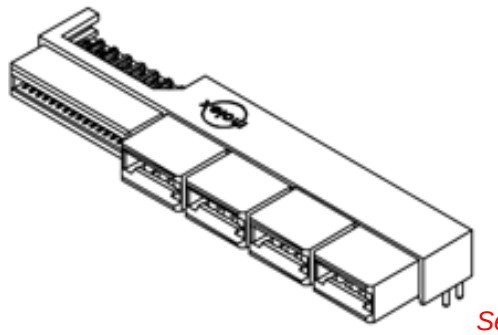

Series

image - Reference only

Documents:

3D Model
Drawing (PDF)
Product Specification PS-45984-001 (PDF)
RoHS Certificate of Compliance (PDF)

Agency Certification

CSA	LR19980
UL	E29179

General

Product Family	PCB Receptacles
Series	45984
Application	Board-to-Board
Overview	extreme_lphpower
Product Name	EXTreme LPHPower™

Physical

Circuits (Loaded)	40
Circuits (maximum)	40
Circuits Detail	8 Power, 32 Signal
Color - Resin	Black
Durability (mating cycles max)	250
Flammability	94V-0
Glow-Wire Compliant	No
Guide to Mating Part	No
Keying to Mating Part	Yes
Lock to Mating Part	No
Material - Metal	High Performance Alloy (HPA), Phosphor Bronze
Material - Plating Mating	Gold
Material - Plating Termination	Tin
Material - Resin	High Temperature Thermoplastic
Number of Rows	2
Orientation	Right Angle
PC Tail Length (in)	0.177 In
PC Tail Length (mm)	4.50 mm
PCB Locator	No
PCB Retention	None
PCB Thickness Recommended (in)	0.125 In
PCB Thickness Recommended (mm)	3.18 mm
Packaging Type	Tray
Pitch - Mating Interface (in)	0.050 In, 0.472 In
Pitch - Mating Interface (mm)	1.27 mm, 12.00 mm
Plating min: Mating (µin)	30
Plating min: Mating (µm)	0.75
Plating min: Termination (µin)	150, 75
Plating min: Termination (µm)	1.875, 3.75
Polarized to Mating Part	Yes
Polarized to PCB	Yes
Stackable	No
Surface Mount Compatible (SMC)	Yes

EU RoHS
ELV and RoHS Compliant
REACH SVHC
Contains SVHC: No
Halogen-Free Status
Halogen-Free

China RoHS

Need more information on product environmental compliance?

Email productcompliance@molex.com
For a multiple part number RoHS Certificate of Compliance, click here

Please visit the Contact Us section for any non-product compliance questions.

Search Parts in this Series
45984Series

Mates With
45985 EXTreme LPHPower™ Headers, 1.57mm (.062") Card Edge

Temperature Range - Operating	-40°C to +105°C
Termination Interface: Style	Through Hole

Electrical

Current - Maximum per Contact	23A
Grounding to PCB	No
Voltage - Maximum	250V AC (RMS)/DC

Solder Process Data

Duration at Max. Process Temperature (seconds)	20
Lead-free Process Capability	Wave Capable (TH only)
Max. Cycles at Max. Process Temperature	3
Process Temperature max. C	260

Material Info

Reference - Drawing Numbers

Packaging Specification	PK-45984-001
Product Specification	PS-45984-001
Sales Drawing	SD-45984-800

This document was generated on 05/21/2010

PLEASE CHECK WWW.MOLEX.COM FOR LATEST PART INFORMATION

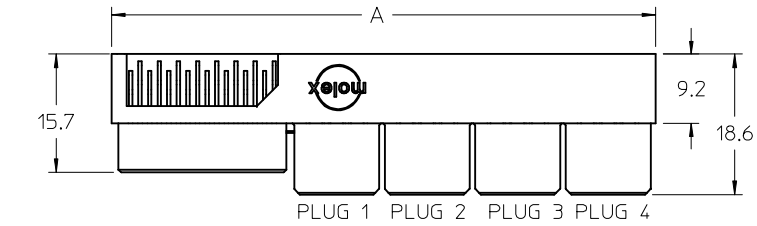

NOTES:

1. MATERIAL HOUSING: LCP, 94V-0, COLOR-BLACK.
   CONTACT: COPPER ALLOY.
2. FINISH: SELECT GOLD - .762 µM/30 MI MIN. CONTACT AREA.
   SELECT TIN - 3.81 µM/150 MI MIN. TAIL AREA.
   BOTH OVER NICKEL - 1.27 µM/50 MI MIN.
3. POWER TERMINALS LUBRICATED IN CONTACT AREA.
4. PRODUCT SPECIFICATION: PS-45984-001.
5. PACKAGING: TRAY PER PK-45984-001.
6. SEE SHEET 5 FOR CKT IDENTIFICATION.
7. PARTS ARE RoHS COMPLIANT.
8. PEG HOLES ARE OPTIONAL SEE SHEET 3 AND 4.
9. MATES TO 1.57/.062 CARD EDGE OR MOLEX P/N 45985-8***.

NO OF SIGNAL	MATERIAL NUMBER	DIM A	DIM P	PCB THK
12	45984-8111	59.5	4.50	3.18
16	45984-8121	62.0		
20	45984-8131	64.6		
24	45984-8141	67.1		
28	45984-8151	69.6		
32	45984-8161	72.2		
36	45984-8171	74.7		
40	45984-8181	77.3		
12	45984-8112	59.5	3.60	2.36
16	45984-8122	62.0		
20	45984-8132	64.6		
24	45984-8142	67.1		
28	45984-8152	69.6		
32	45984-8162	72.2		
36	45984-8172	74.7		
40	45984-8182	77.3		
12	45984-8113	59.5	2.90	1.57
16	45984-8123	62.0		
20	45984-8133	64.6		
24	45984-8143	67.1		
28	45984-8153	69.6		
32	45984-8163	72.2		
36	45984-8173	74.7		
40	45984-8183	77.3		

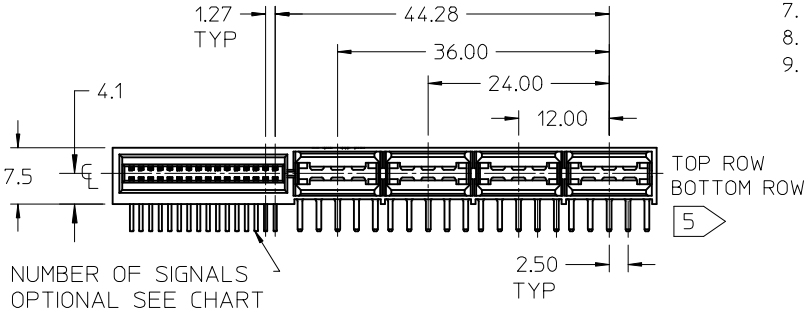

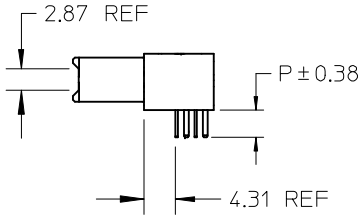

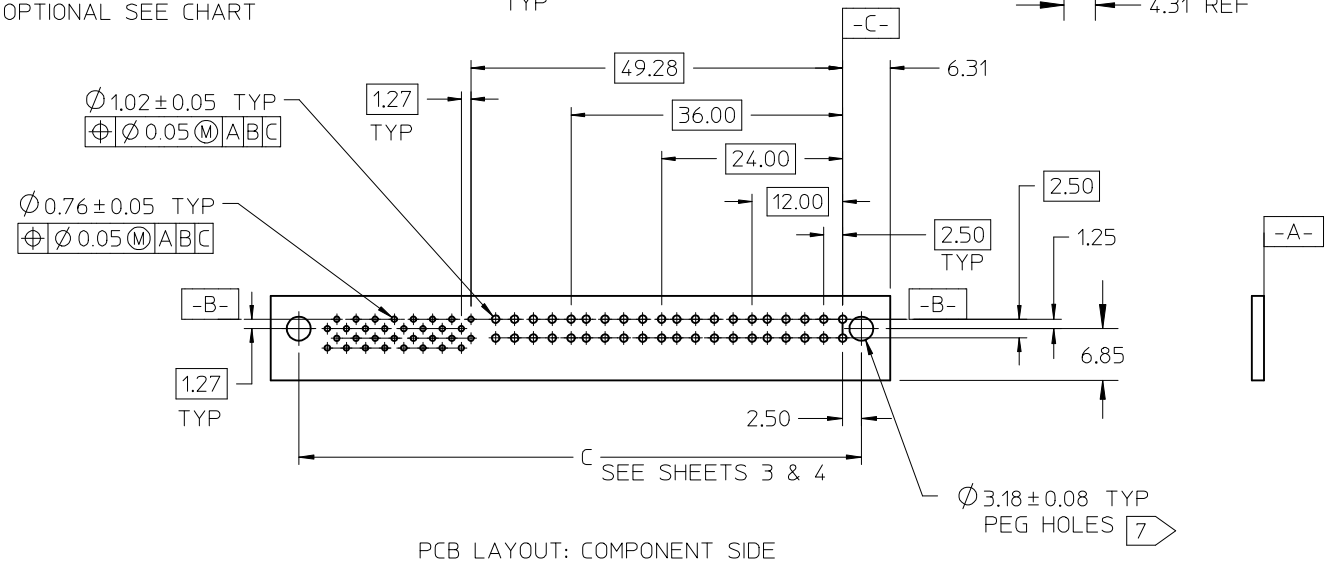

PCB LAYOUT: COMPONENT SIDE
PEG HOLES OPTIONAL

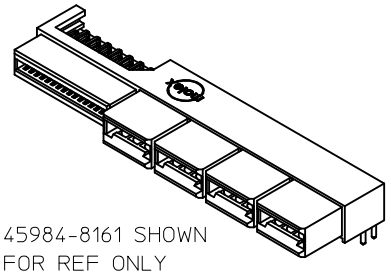

45984-8161 SHOWN
FOR REF ONLY
SEE CHART

REV	DESCRIPTION
E	REVISED 2008/11/13 EC NO: UCP2009-0971 DRWN:MBANDURA 2008/11/14 CH'KD: APPR:APATEL 2008/11/17

GENERAL TOLERANCES (UNLESS SPECIFIED)

	mm	INCH
4 PLACES	± ---	± ---
3 PLACES	± ---	± ---
2 PLACES	± 0.25	± ---
1 PLACE	± ---	± ---
ANGULAR ±1/2°		

DRAFT WHERE APPLICABLE MUST REMAIN WITHIN DIMENSIONS

DIMENSION STYLE: MM ONLY
SCALE: 1:1
DESIGN UNITS: METRIC
THIRD ANGLE PROJECTION

DRAWN BY: SAMIEC DATE: 2005/05/13
CHECKED BY: SAMIEC DATE: 2005/05/13
APPROVED BY: MARGULIS DATE: 2005/05/13

TITLE: LPH RECEPTACLE ASSEMBLY RT ANGLE 8 CIRCUIT POWER CONNECTOR

MOLEX INCORPORATED

MATERIAL NO.: SEE CHART
DOCUMENT NO.: SD-45984-800
SHEET NO.: 1 OF 5

SIZE: A

THIS DRAWING CONTAINS INFORMATION THAT IS PROPRIETARY TO MOLEX INCORPORATED AND SHOULD NOT BE USED WITHOUT WRITTEN PERMISSION

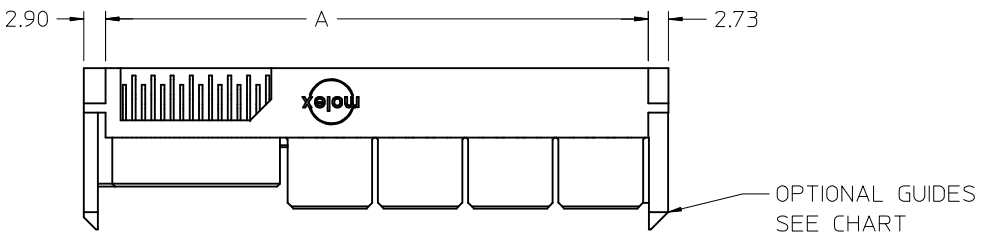

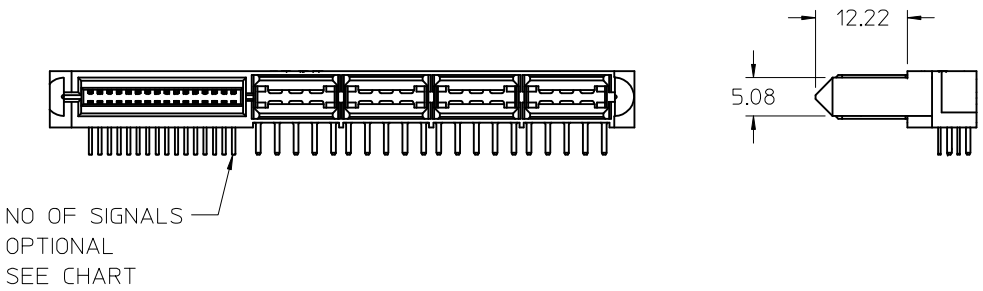

GUIDE POST OPTIONS

NO OF SIGNAL	MATERIAL NUMBER	DIM A	DIM P	PCB THK
12	45984-8211	59.5	4.50	3.18
16	45984-8221	62.0		
20	45984-8231	64.6		
24	45984-8241	67.1		
28	45984-8251	69.6		
32	45984-8261	72.2		
36	45984-8271	74.7		
40	45984-8281	77.3		
12	45984-8212	59.5	3.60	2.36
16	45984-8222	62.0		
20	45984-8232	64.6		
24	45984-8242	67.1		
28	45984-8252	69.6		
32	45984-8262	72.2		
36	45984-8272	74.7		
40	45984-8282	77.3		
12	45984-8213	59.5	2.90	1.57
16	45984-8223	62.0		
20	45984-8233	64.6		
24	45984-8243	67.1		
28	45984-8253	69.6		
32	45984-8263	72.2		
36	45984-8273	74.7		
40	45984-8283	77.3		

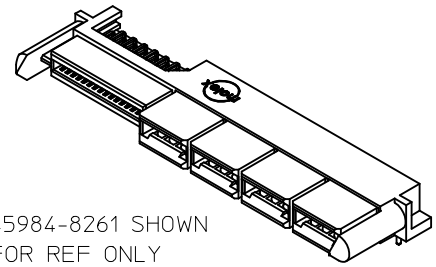

45984-8261 SHOWN
FOR REF ONLY
SEE CHART

REV	DESCRIPTION
E	REVISED EC NO: UCP2009-0971 DRWN:MBANDURA 2008/11/13 CH'KD: 2008/11/14 APPR:APATEL 2008/11/17

GENERAL TOLERANCES (UNLESS SPECIFIED)

	mm	INCH
4 PLACES	± ---	± ---
3 PLACES	± ---	± ---
2 PLACES	± 0.25	± ---
1 PLACE	± ---	± ---
ANGULAR ±1/2°		

DRAFT WHERE APPLICABLE MUST REMAIN WITHIN DIMENSIONS

DIMENSION STYLE: MM ONLY
SCALE: 1:1
DESIGN UNITS: METRIC
THIRD ANGLE PROJECTION

DRAWN BY: SAMIEC DATE: 2005/05/13
CHECKED BY: SAMIEC DATE: 2005/05/13
APPROVED BY: MARGULIS DATE: 2005/05/13

TITLE: LPH RECEPTACLE ASSEMBLY RT ANGLE 8 CIRCUIT POWER CONNECTOR

MOLEX INCORPORATED

MATERIAL NO.: SEE CHART
DOCUMENT NO.: SD-45984-800
SHEET NO.: 2 OF 5
SIZE: A

THIS DRAWING CONTAINS INFORMATION THAT IS PROPRIETARY TO MOLEX INCORPORATED AND SHOULD NOT BE USED WITHOUT WRITTEN PERMISSION

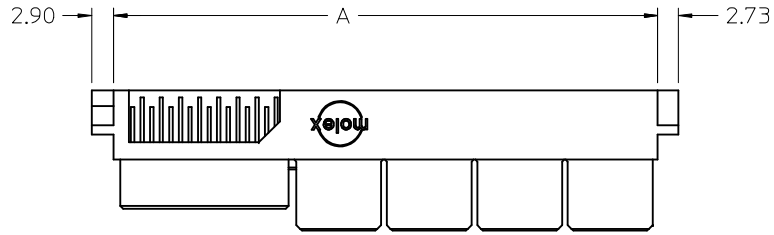

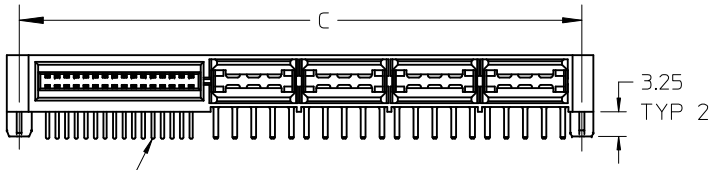

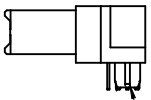

MOUNTING PEG OPTIONS

NO OF SIGNAL	MATERIAL NUMBER	DIM A	DIM C	DIM P	PCB THK
12	45984-8311	59.5	61.90	4.50	3.18
16	45984-8321	62.0	64.44		
20	45984-8331	64.6	66.98		
24	45984-8341	67.1	69.52		
28	45984-8351	69.6	72.06		
32	45984-8361	72.2	74.60		
36	45984-8371	74.7	77.14		
40	45984-8381	77.3	79.68		
12	45984-8312	59.5	61.90	3.60	2.36
16	45984-8322	62.0	64.44		
20	45984-8332	64.6	66.98		
24	45984-8342	67.1	69.52		
28	45984-8352	69.6	72.06		
32	45984-8362	72.2	74.60		
36	45984-8372	74.7	77.14		
40	45984-8382	77.3	79.68		
12	45984-8313	59.5	61.90	2.90	1.57
16	45984-8323	62.0	64.44		
20	45984-8333	64.6	66.98		
24	45984-8343	67.1	69.52		
28	45984-8353	69.6	72.06		
32	45984-8363	72.2	74.60		
36	45984-8373	74.7	77.14		
40	45984-8383	77.3	79.68		

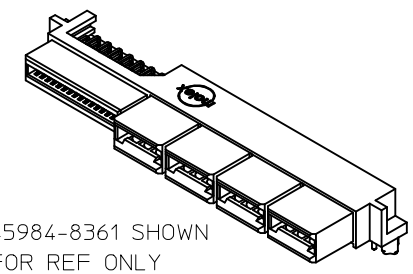

45984-8361 SHOWN
FOR REF ONLY
SEE CHART

REV	DESCRIPTION
E	REVISED EC NO: UCP2009-0971 DRWN:MBANDURA 2008/11/13 CH'KD: 2008/11/14 APPR:APATEL 2008/11/17

GENERAL TOLERANCES (UNLESS SPECIFIED)

	mm	INCH
4 PLACES	± ---	± ---
3 PLACES	± ---	± ---
2 PLACES	± 0.25	± ---
1 PLACE	± ---	± ---
ANGULAR ±1/2°		

DRAFT WHERE APPLICABLE MUST REMAIN WITHIN DIMENSIONS

DIMENSION STYLE: MM ONLY
SCALE: 1:1
DESIGN UNITS: METRIC
THIRD ANGLE PROJECTION

DRAWN BY: SAMIEC DATE: 2005/05/13
CHECKED BY: SAMIEC DATE: 2005/05/13
APPROVED BY: MARGULIS DATE: 2005/05/13

TITLE: LPH RECEPTACLE ASSEMBLY RT ANGLE 8 CIRCUIT POWER CONNECTOR

MOLEX INCORPORATED

MATERIAL NO.: SEE CHART
DOCUMENT NO.: SD-45984-800
SHEET NO.: 3 OF 5
SIZE: A

THIS DRAWING CONTAINS INFORMATION THAT IS PROPRIETARY TO MOLEX INCORPORATED AND SHOULD NOT BE USED WITHOUT WRITTEN PERMISSION

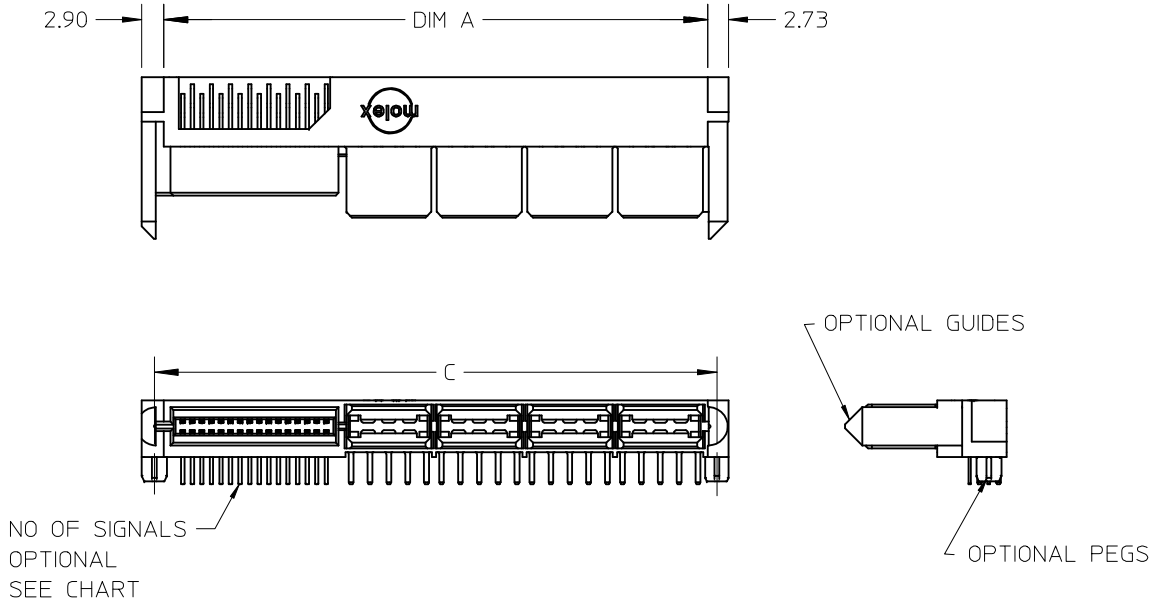

GUIDE POST & MOUNTING PEG OPTIONS

NO OF SIGNAL	MATERIAL NUMBER	DIM A	DIM C	DIM P	PCB THK
12	45984-8411	59.5	61.90	4.50	3.18
16	45984-8421	62.0	64.44		
20	45984-8431	64.6	66.98		
24	45984-8441	67.1	69.52		
28	45984-8451	69.6	72.06		
32	45984-8461	72.2	74.60		
36	45984-8471	74.7	77.14		
40	45984-8481	77.3	79.68		
12	45984-8412	59.5	61.90	3.60	2.36
16	45984-8422	62.0	64.44		
20	45984-8432	64.6	66.98		
24	45984-8442	67.1	69.52		
28	45984-8452	69.6	72.06		
32	45984-8462	72.2	74.60		
36	45984-8472	74.7	77.14		
40	45984-8482	77.3	79.68		
12	45984-8413	59.5	61.90	2.90	1.57
16	45984-8423	62.0	64.44		
20	45984-8433	64.6	66.98		
24	45984-8443	67.1	69.52		
28	45984-8453	69.6	72.06		
32	45984-8463	72.2	74.60		
36	45984-8473	74.7	77.14		
40	45984-8483	77.3	79.68		

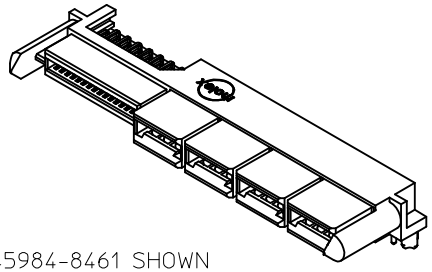

45984-8461 SHOWN
FOR REF ONLY
SEE CHART

REV	DESCRIPTION
E	REVISED EC NO: UCP2009-0971 DRWN:MBANDURA 2008/11/13 CH'KD: 2008/11/14 APPR:APATEL 2008/11/17

GENERAL TOLERANCES (UNLESS SPECIFIED)

	mm	INCH
4 PLACES	± ---	± ---
3 PLACES	± ---	± ---
2 PLACES	± 0.25	± ---
1 PLACE	± ---	± ---
ANGULAR ±1/2°		

DRAFT WHERE APPLICABLE MUST REMAIN WITHIN DIMENSIONS

DIMENSION STYLE: MM ONLY
SCALE: 1:1
DESIGN UNITS: METRIC
THIRD ANGLE PROJECTION

DRAWN BY: SAMIEC DATE: 2005/05/13
CHECKED BY: SAMIEC DATE: 2005/05/13
APPROVED BY: MARGULIS DATE: 2005/05/13

TITLE: LPH RECEPTACLE ASSEMBLY RT ANGLE 8 CIRCUIT POWER CONNECTOR

MOLEX INCORPORATED

MATERIAL NO.: SEE CHART
DOCUMENT NO.: SD-45984-800
SHEET NO.: 4 OF 5
SIZE: A

THIS DRAWING CONTAINS INFORMATION THAT IS PROPRIETARY TO MOLEX INCORPORATED AND SHOULD NOT BE USED WITHOUT WRITTEN PERMISSION

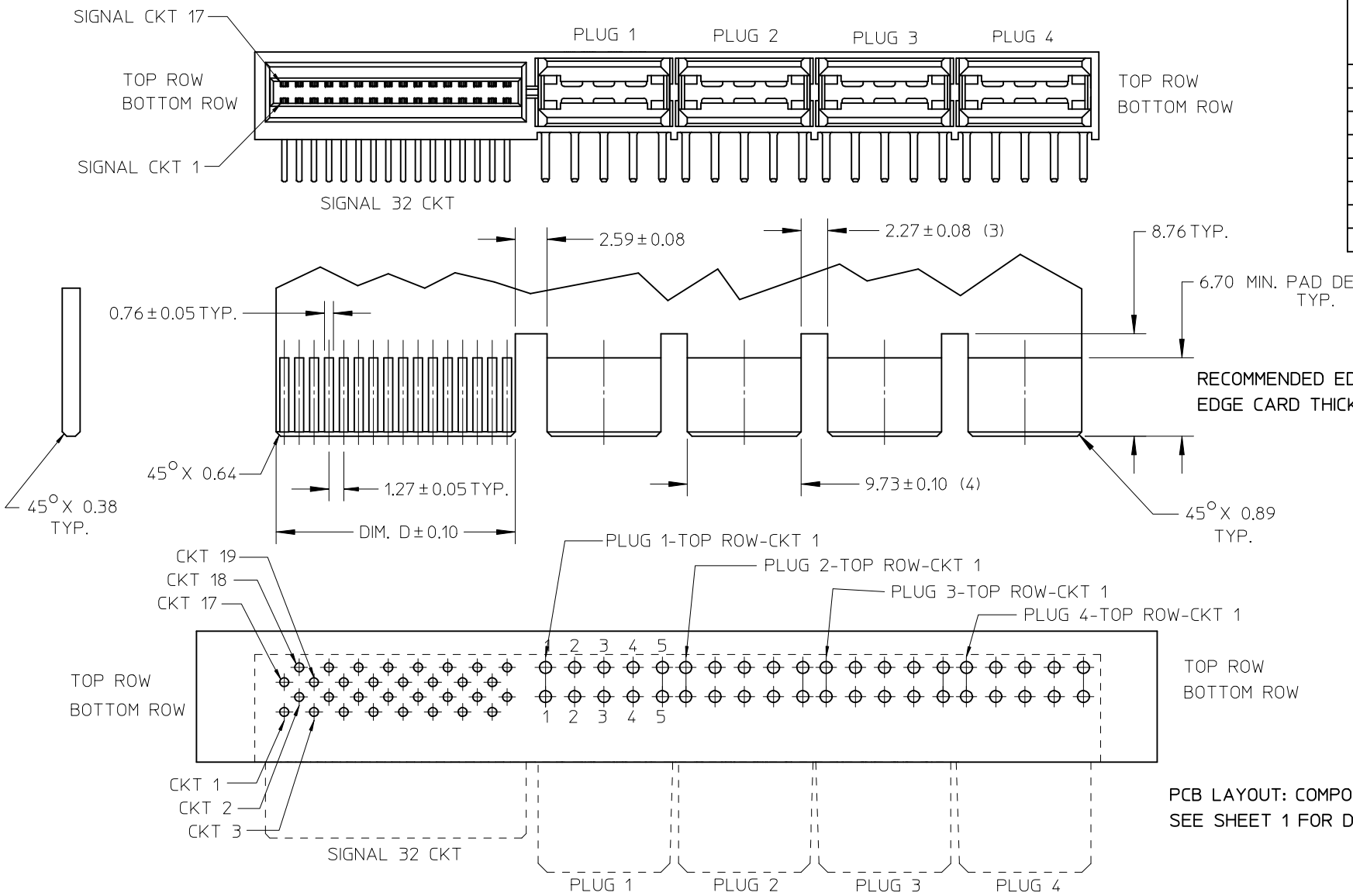

NO. OF SIGNAL	DIM. D
12	8.00
16	10.54
20	13.08
24	15.62
28	18.16
32	20.70
36	23.24
40	25.78

PCB LAYOUT: COMPONENT SIDE
SEE SHEET 1 FOR DIMENSIONS

REV	DESCRIPTION	
E	REVISED	
	EC NO: UCP2009-0971	2008/11/13
	DRWN:MBANDURA	2008/11/14
	CH'KD:	
	APPR:APATEL	2008/11/17

GENERAL TOLERANCES (UNLESS SPECIFIED)

	mm	INCH
4 PLACES	± ---	± ---
3 PLACES	± ---	± ---
2 PLACES	± 0.25	± ---
1 PLACE	± ---	± ---
ANGULAR ±1/2°		

DRAFT WHERE APPLICABLE MUST REMAIN WITHIN DIMENSIONS

DIMENSION STYLE: MM ONLY
SCALE: 2:1
DESIGN UNITS: METRIC
THIRD ANGLE PROJECTION

		DATE
DRAWN BY	SAMIEC	2005/05/13
CHECKED BY	SAMIEC	2005/05/13
APPROVED BY	MARGULIS	2005/05/13
MATERIAL NO.		

TITLE: LPH RECEPTACLE ASSEMBLY RT ANGLE 8 CIRCUIT POWER CONNECTOR

MOLEX INCORPORATED

DOCUMENT NO.: SD-45984-800

SHEET NO.: 5 OF 5

SIZE: A

THIS DRAWING CONTAINS INFORMATION THAT IS PROPRIETARY TO MOLEX INCORPORATED AND SHOULD NOT BE USED WITHOUT WRITTEN PERMISSION