TYAN

www.tyan.com

DUAL-SOCKET SERVER / WORKSTATION PLATFORM

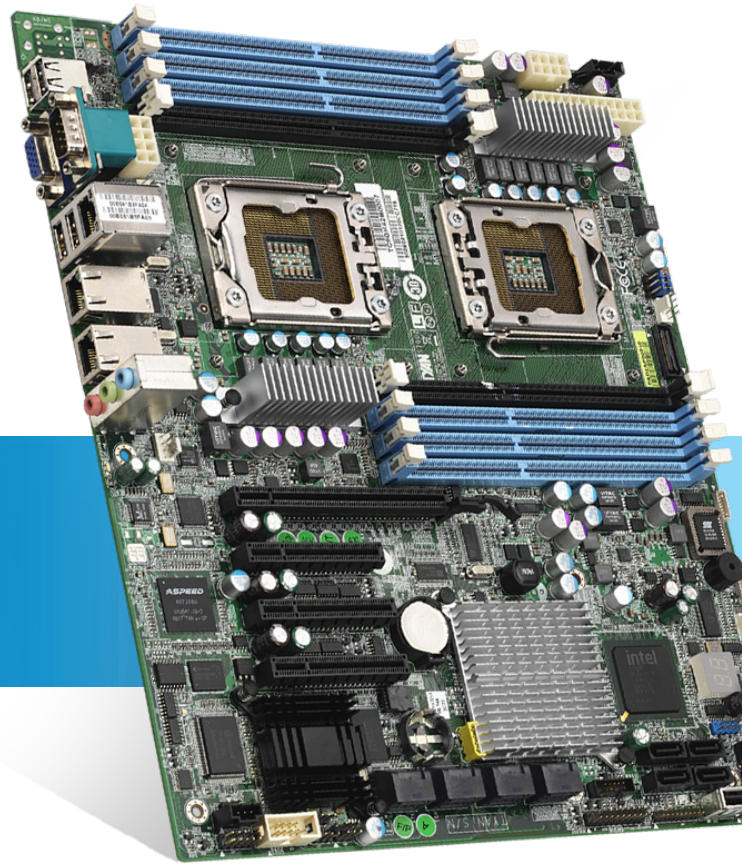

S7002

S7002WGM2NR / S7002AG2NR

intel Xeon inside | 32nm | 6 Six Core | QPI Quick Path Interconnect | DDR3

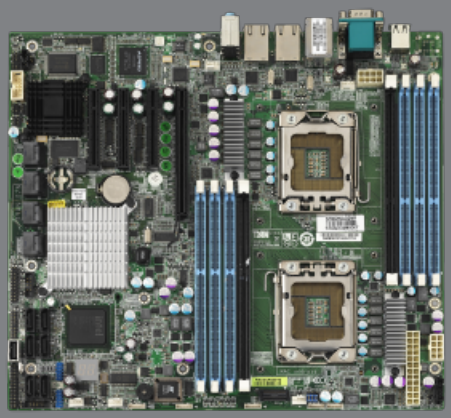

■ Intel® 5520 Chipset

Entry dual-socket server/ workstation platform for most of enterprise and HPC applications

- Dual LGA1366 sockets support up to (2) Intel® Xeon® Processor 5500/ 5600 Series
- Support QPI 6.4/ 5.86/ 4.8 GT/s
- Intel® 5520 IOH
- Intel® ICH10R South Bridge
- (8) 240-pin DDR3 DIMM slots support up to 64GB R-DDR3 1333/1066/800MHz w/ ECC memory
- (1) PCI-E Gen.2 x16 slot
- (2) PCI-E Gen.2 x8 slots
- (1) PCI-E x8 slot (w/ x4 link)
- (6) SATA-II connectors w/ RAID 0, 1, 10, 5 support
- (4) stacked 2-port SAS connectors w/ RAID 0, 1, 1E support (S7002WGM2NR)
- Onboard Audio (S7002AG2NR)
- (2) GbE LAN
- Onboard BMC w/ iKVM support (S7002WGM2NR)
- SSI CEB (12" x 10.5") form factor

Specifications are subject to change without notice. Items pictured may only be representative.

S7002

S7002WGM2NR / S7002AG2NR

TYAN Specifications

Processor	Supported CPU Series		Intel® Xeon® Processor 5500/ 5600 Series
	Socket Type / Q'ty		LGA1366 / (2)
	Thermal Design Power (TDP) wattage		130W
	System Bus		Up to 4.8/ 5.86/ 6.4GT/s with Intel® QuickPath Interconnect (QPI) support
Chipset	IOH / ICH		Intel® 5520 / ICH10R
	Super I/O		Winbond W83627
Memory	Supported DIMM Qty		(8) DIMM sockets
	DIMM Type / Speed		DDR3 800/1066/1333 RDIMM/UDIMM
	Capacity		Up to 64GB
	Memory channel		6 Channels (3 Channels per CPU)
	Memory voltage		1.5V
Expansion Slots	PCI-E		(1) PCI-E Gen.2 x16 slot (2) PCI-E Gen.2 x8 slots (1) PCI-E x8 slot (w/ x4 link)
	Recommended TYAN® Riser Card		M2083-RS, PCI-E x16 1U riser card (left)
LAN	Port Q'ty		(2)
	Controller		Intel® 82574L
Storage	SAS (opt.)	Connector	(8)
		Controller	LSI SAS1068E (S7002WGM2NR only)
		Speed	3.0 Gb/s
		RAID	RAID 0/1/1E (LSI Integrated RAID)
	SATA	Connector	(6)
		Controller	ICH10R
		Speed	3.0 Gb/s
		RAID	RAID 0/1/10/5 (Intel® Matrix RAID)
Graphic	Connector type		D-Sub 15-pin
	Resolution		1600x1200@60Hz
	Chipset		Aspeed AST2050
Audio	Chipset		Realtek ALC888 (S7002AG2NR only)
	Feature		HDA 2.0 spec. complaint
Input /Output	USB		(9) USB2.0 ports (4 at rear, 4 via cable, 1 type A onboard)
	COM		(2) ports (1 at rear, 1 via cable)
	SAS (opt.)		(8) SAS connectors (S7002WGM2NR only)
	VGA		(1) D-Sub 15-pin VGA port
	Audio (opt.)		LINE_IN, LINE_OUT, MIC_IN connectors (1) 2x5-pin front panel audio header (S7002AG2NR only)
	RJ-45		(2) GbE ports
	Power		SSI 24-pin + 8-pin + 8-pin power connectors / EPS12V
	Front Panel		(1) 2x12 pin SSI front panel header
	SATA		(6) SATA-II connectors
System Monitoring	Chipset		Winbond W83793G
	Voltage		Monitors voltage for CPU, memory, chipset & power supply
	Fan		Total (5) 4-pin headers Total (5) 8-pin headers
	Temperature		Monitors temperature for CPU & system environment
	LED		Fan fail LED indicator Over temperature warning indicator
	Others		Chassis intrusion detection Watchdog timer support

Block Diagram

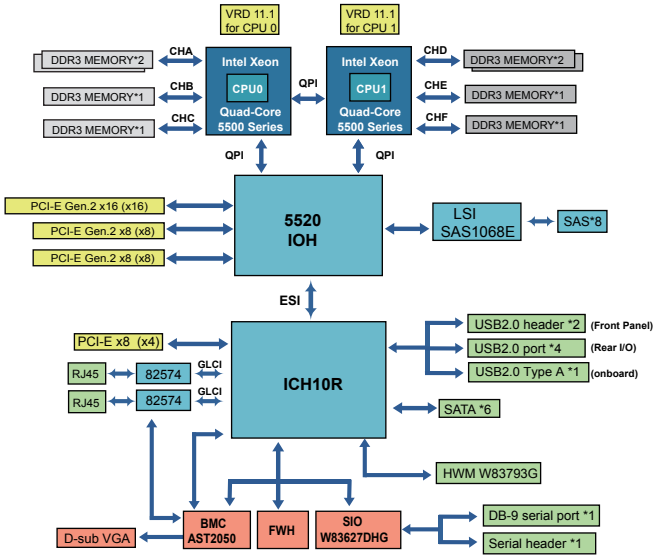

Server Management	Onboard Chipset	Onboard Aspeed AST2050
	AST2050 IPMI Feature (opt.)	IPMI 2.0 compliant baseboard management controller (BMC) Supports storage over IP and remote platform-flash BIOS update USB 2.0 virtual hub (S7002WGM2NR only)
Server Management	AST2050 iKVM Feature (opt.)	24-bit high quality video compression Dual 10/100 Mb/s MAC interfaces (S7002WGM2NR only)
BIOS	Brand / ROM size	AMI / 4MB
	Feature	Plug and Play (PnP)/ PCI 2.3 WfM2.0 / SMBIOS2.3 / PXE boot ACPI 2.0 power management Power on mode after power recovery User-configurable H/W monitoring Auto-configurable of hard disk types Multiple boot options
Form Factor	Form Factor	SSI CEB
	Board Dimension	12"x10.5" (305x267mm)
Operating System	OS supported list	Please refer to our OS supported list.
Regulation	FCC (DoC)	Class B
	CE (DoC)	Yes
Operating Environment	Operating Temp.	10° C ~ 35° C (50° F~ 95° F)
	Non-operating Temp.	- 40° C ~ 70° C (-40° F ~ 158° F)
	In/Non-operating Humidity	90%, non-condensing at 35° C
RoHS	RoHS 6/6 Complaint	Yes

(Specifications are subject to change without notice. Items pictured may only be representative.)

MITAC INTERNATIONAL CORP.
TYAN Business Unit

USA
Tel: +1-510-651-8868
Fax: +1-510-651-7688

Taiwan
Tel: +886-2-2652-5888
Fax: +886-2-2652-5805

Japan
Tel: +81-3-3769-8311
Fax: +81-3-3769-8328

Europe
Sales: +32 2456 1721
Technical Support: +32 2456 1722

China
Shanghai Tel: +86-21-61431188 Ext 1366
China Tel:-86-010-62555015 Ext 8302