NXP Semiconductors
User's Guide

Document Number: FRDMKW24DUG
Rev. 1, 05/2016

FRDM-KW24D512 Freedom Development Platform User's Guide

Contents

1. Introduction 1
1.1.Audience 1
2. Safety Information 1
2.1.FCC guidelines 1
2.2.Regulatory approval for Canada (IC RSS 210) . . . 2
2.3.Electrostatic discharge considerations 3
2.4.Disposal instructions 3
3. FRDM-KW24D512 Overview and Description 3
3.1.Introduction 3
3.2.Platform features 4
3.3.Software and driver considerations 6
4. FRDM-KW24D512 Development Platform 6
4.1.FRDM-KW24D512 platform overview 6
4.2.Functional description 9
4.3.Schematic, platform layout, and bill of material . 17
5. PCB Manufacturing Specifications 26
5.1.Single PCB construction 27
5.2.Panelization 28
5.3.Materials 28
5.4.Solder mask 28
5.5.Silk screen 28
5.6.Electrical PCB testing 29
5.7.Packaging 29
5.8.Hole specification/tool table 29
5.9.File description 29
6. Revision History 29

1 Introduction

This manual describes the development platform, FRDM-KW24D512. It has a diverse reference design with all necessary I/O connections to use as a self-contained platform or for connection to an external application.

The MKW24D512 is a 2.4 GHz Industrial, Scientific, and Medical (ISM) single-chip device intended for the IEEE® Std. 802.15.4, including Thread, ZigBee® Pro stack, ZigBee RF4CE standards, and IPv6/6loWPAN protocols.

The FRDM-KW24D512 contains the MKW24D512 transceiver that is typically combined with a software stack to implement an IEEE Std. 802.15.4 platform solutions.

1.1 Audience

This document is intended for system designers.

2 Safety Information

2.1 FCC guidelines

This equipment is used by developers for evaluation purposes only and must not be incorporated into any other

devices or systems. Integrators are responsible for reevaluating the end product (including the transmitter) and obtaining a separate FCC authorization.

FCC approval of this device only covers the original configuration of this device as supplied. Any modifications to this product, including changes shown in this document, may violate the rules of the Federal Communications Commission and Industry Canada and make operation of the product unlawful.

2.1.1 Labeling

FCC labels are physically located on the back of the platform.

2.1.2 Operating conditions

This device complies with part 15 of the FCC rules. Operation is subject to the following two conditions:

- This device may not cause harmful interference.
- This device must accept any interference received, including interference that may cause undesired operation.

2.1.3 Exposure limits

This equipment complies with FCC radiation exposure limits set forth for an uncontrolled environment. The antenna(s) used for this equipment must be installed to provide a separation distance of at least 8 inches (20 cm) from all persons.

2.1.4 Antenna restrictions

An intentional radiator is designed to ensure that no antenna other than that furnished by the responsible party is used with the device. The use of a permanently attached antenna or of an antenna that uses a unique coupling to the intentional radiator is considered sufficient to comply with the provisions of this Section. The manufacturer may design the unit so that a broken antenna can be replaced by the user, but the use of a standard antenna jack or electrical connector is prohibited. This requirement does not apply to carrier current devices or to devices operated under the provisions of Sections 15.211, 15.213, 15.217, 15.219, or 15.221 of the IEEE Std. 802.15.4. In addition, this requirement does not apply to intentional radiators that must be professionally installed, such as perimeter protection systems and some field disturbance sensors, or to other intentional radiators which, in accordance with Section 15.31(d) of the IEEE Std. 802.15.4, must be measured at the installation site. However, the installer is responsible for ensuring that the proper antenna is employed so that the limits in this Part are not exceeded.

2.2 Regulatory approval for Canada (IC RSS 210)

This equipment complies with Industry Canada licence-exempt RSS standard(s). Operation is subject to the following two conditions:

- This platform may not cause interference.
- This platform must accept any interference, including interference that may cause undesired operation of the device.

2.2.1 26 PART 5 – Appendix

Le présent appareil est conforme aux CNR d'Industrie Canada applicables aux appareils radio exempts de licence. L'exploitation est autorisée aux deux conditions suivantes:

1. l'appareil ne doit pas produire de brouillage, et
2. l'utilisateur de l'appareil doit accepter tout brouillage radioélectrique subi, même si le brouillage est susceptible d'en compromettre le fonctionnement.

2.3 Electrostatic discharge considerations

Although damage from electrostatic discharge (ESD) is much less common on these devices than on early CMOS circuits, normal handling precautions should be used to avoid exposure to static discharge. Qualification tests are performed to ensure that these devices can withstand exposure to reasonable levels of static without suffering any permanent damage.

All ESD testing is in conformity with the JESD22 Stress Test Qualification for Commercial Grade Integrated Circuits. During the device qualification, ESD stresses are performed for the human body model (HBM), the machine model (MM), and the charge device model (CDM).

All latch-up tests are in conformity with the JESD78 IC Latch-Up Test.

When operating or handling the development platforms or components, it is strongly recommended to use at least the grounding wrist straps plus any, or all, of the following ESD dissipation methods:

- Flexible fabric, solid fixed size, or disposable ESD wrist straps
- Static control workstations, static control monitors, and table or floor static control systems
- Static control packaging and transportation materials and environmental systems

2.4 Disposal instructions

The NXP development platforms must be disposed of in compliance with current local waste disposal regulations. Appliances disposal should be done by a qualified company.

3 FRDM-KW24D512 Overview and Description

3.1 Introduction

The FRDM-KW24D512 development platform is an evaluation environment based on the NXP MKW24D512 transceiver (MKW24).

The MKW24D512 device incorporates a complete low power IEEE Std. 802.15.4 2.4 GHz radio frequency transceiver and a Kinetis family low-power, mixed-signal ARM® Cortex®-M4 MCU into a single package.

NXP supplements the MKW24D512 with tools and software that include hardware evaluation and development platforms, software development IDE, and applications, drivers, custom PHY usable with the NXP IEEE Std. 802.15.4 compatible MAC.

The FRDM-KW24D512 development platform contains the MKW24D512 device with 32 MHz reference oscillator crystal, RF circuitry including antenna, 16 Mbit external serial flash, and supporting circuitry in the popular Freedom form factor. The platform is standalone and supports application development with NXP IEEE Std. 802.15.4 protocol stacks and supports full-speed USB 2.0.

3.2 Platform features

3.2.1 FRDM-KW24D512 platform

The FRDM-KW24D512 development platform is part of the Freedom development (FRDM) platform. It has a diverse reference design containing the MKW24D512 device and all necessary I/O connections to use as a self-contained platform or for connection to an external application, and also has the capability to connect with the Freedom development platforms.

Figure 1 shows the FRDM-KW24D512 development platform.

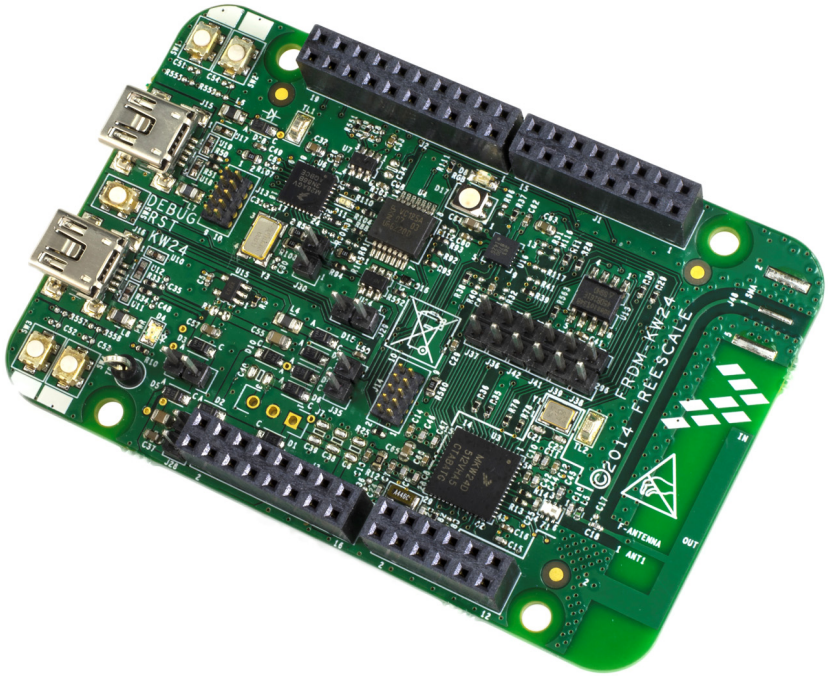

Figure 1. FRDM-KW24D512 development platform

The FRDM-KW24D512 development platform includes the following features:

- The low-power Kinetis MKW24D512 transceiver
- Full IEEE Std. 802.15.4-compliant wireless node; ZigBee and Thread capable
- Reference design area with small footprint, low-cost RF node
  - — RF circuitry includes a Balun to convert the differential input/output pin of the MKW24D512 transciever to single-ended for onboard signal routing
  - — Low off-chip component count

  - Programmable output power from -35 dBm to +8 dBm at the SMA connector, no trap
  - Receiver sensitivity: -102 dBm, typical (@1% PER for 20 byte payload packet)
- Integrated PCB inverted F-type antenna and SMA RF port
- Selectable power sources
- 32 MHz reference oscillator
- 32 kHz clock oscillator
- 2.4 GHz frequency operation (ISM Band)
- External serial flash for over-the-air programming (OTAP) support
- Integrated open-standard serial and debug interface (OpenSDA)
- Cortex 10-pin (0.05 inches) SWD debug port for target MCU
- Cortex 10-pin (0.05 inches) JTAG port for OpenSDA updates
- 1 RGB LED indicator
- 1 Blue LED indicator
- 4 Push button switches
- FXOS8700 Combo Sensor

Figure 2 shows the main platform features and I/O headers for the FRDM-KW24D512 platform.

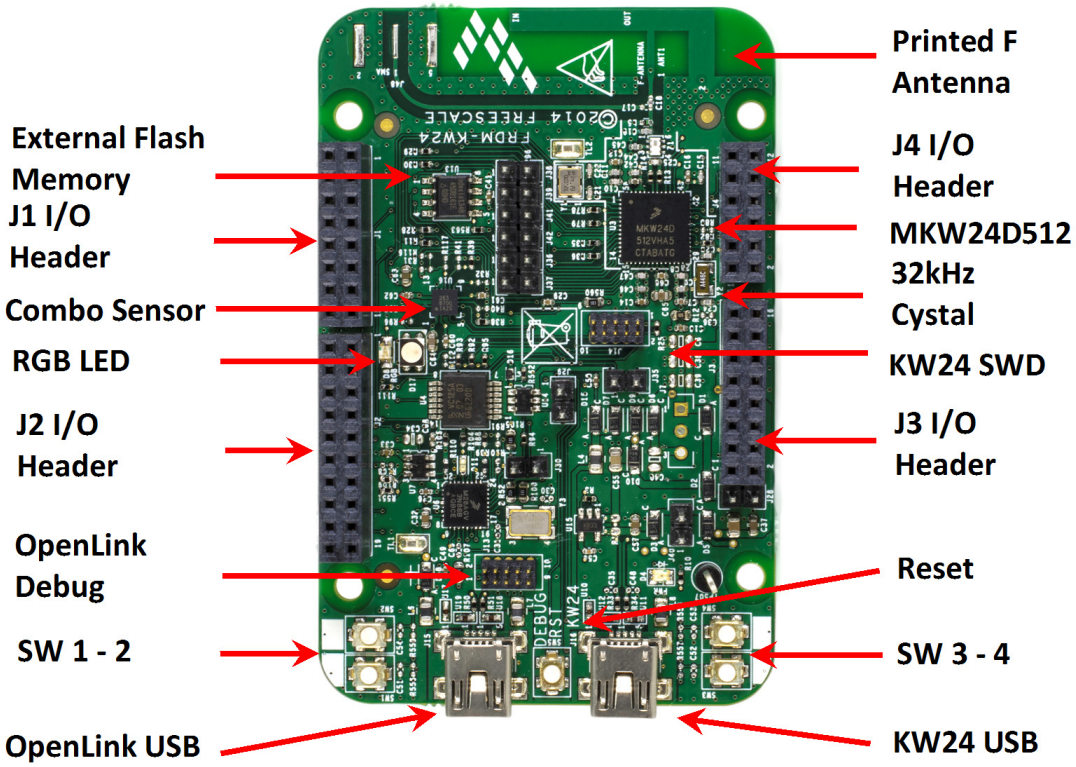

Figure 2. FRDM-KW24D512 components and I/O headers

3.3 Software and driver considerations

The FRDM-KW24D512 platform includes an OpenSDAv2.1, a serial and debug adapter circuit that includes an open-source bootloader, and debug interface software. It bridges serial and debug communications between a USB host and an embedded target processor. The hardware circuit is based on the Kinetis K20 family.

For additional information about our 2.4 GHz Kinetis family platforms, see the following:

- Wireless on nxp.com
- Kinetis KW2xD on nxp.com

4 FRDM-KW24D512 Development Platform

4.1 FRDM-KW24D512 platform overview

The FRDM-KW24D512 is an evaluation platform based on the MKW24D512 transceiver. The FRDM-KW24D512 platform provides a platform to evaluate the MKW24D512 transceiver, develop software and applications. The core device is accompanied by a 32 MHz reference oscillator crystal, RF circuitry including antenna, and supporting circuitry.

The FRDM-KW24D512 platform is intended as the core PCB for MKW24D512 transceiver evaluation and application development, and can be used in the following modes:

- Simple standalone evaluation platform
- Daughter card to other development platforms (Freedom development platform)
- Mother card to an application-specific daughter card, such as a shield card

4.1.1 PCB features

The FRDM-KW24D512 platform provides the following features:

- The Freedom development platform form factor
- 4-Layer metal, 0.062 inch thick FR4 platform
- LGA footprint and power supply bypass
- Printed metal F-Antenna and footprint for installing a (user supplied) SMA connector
- 32 MHz reference oscillator crystal
- 32.768 kHz crystal provided for optional timing oscillator
- Standard FRDM card mounting interface
- External serial flash for OTAP support
- Combo sensor, 6-axis sensor with integrated linear accelerometer and magnetometer

4.1.2 Form factor

Figure 3 shows the FRDM-KW24D512 platform's connector and header locations.

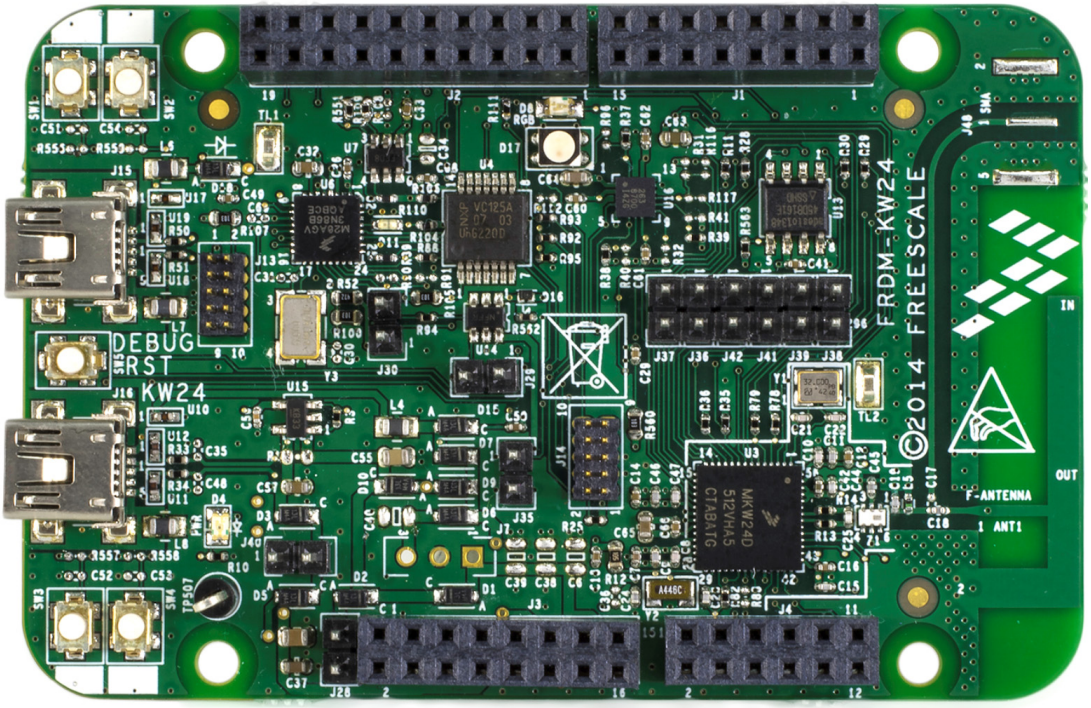

Figure 3. FRDM-KW24D512 platform's connector and header location

Figure 4 shows a footprint of the FRDM-KW24D512 platform with the location of the I/O headers. The parameters of these headers are as follows:

- J1, J2, J3 and J4:
  - Headers have standard 0.1 inch / 2.54 mm pin spacing
  - J1 and J3 are 16-pin
  - J2 is 20-pin
  - J4 is 12-pin
  - Pin headers are mounted on the top side of the FRDM-KW24D512 and are intended to plug into matching receptacles on the Freedom Platform
- J36, J37, J38, J39, J41, and J42:
  - Headers have standard 0.1 in / 2.54 mm pin spacing
  - All headers are 2x2 pin
  - J41 and J42 are adjacent to allow UART0 data direction to be reversed by altering the orientation of the shunt
  - J38 and J39 are adjacent to allow SPI0 data direction to be reversed by altering the orientation of the shunt
  - J36 and J37 are adjacent to allow UART1 data direction to be reversed by altering the orientation of the shunt

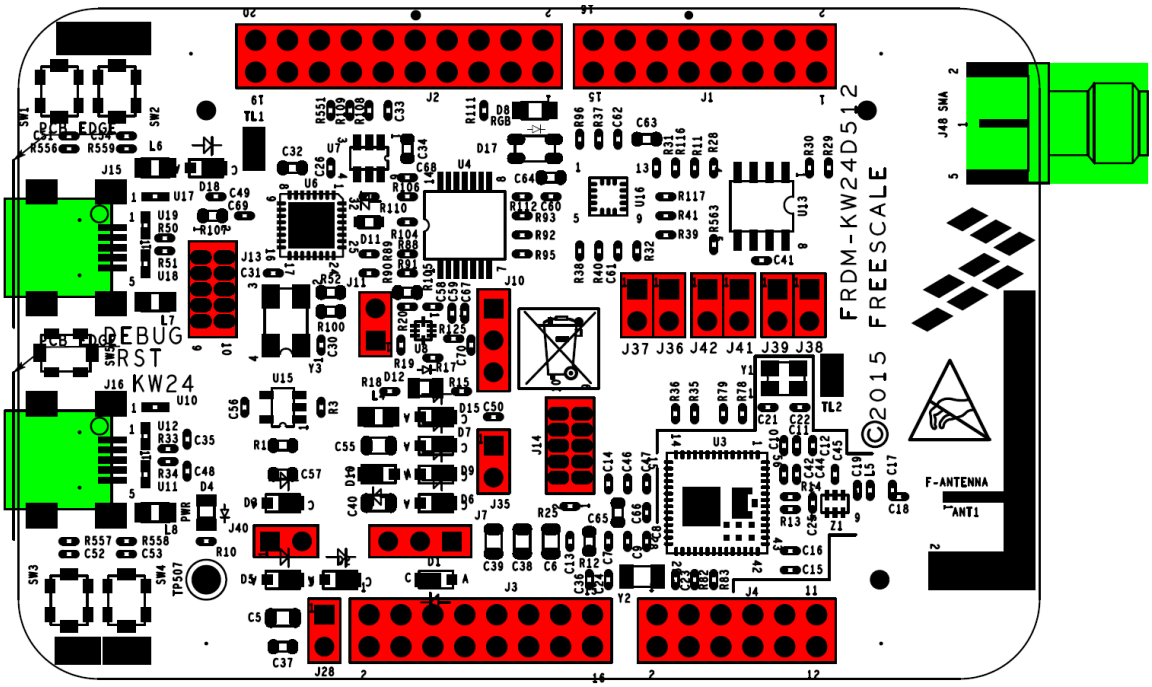

Figure 4. FRDM-KW24D512 platform top side (component side) footprint

4.1.3 Platform level specifications

Table 1. FRDM-KW24D512 platform specifications

Parameter	Min	Typ	Max	Units	Notes/Conditions
General					
Size (PCB: X, Y)	—	—	81.2 x 53.3 3.20 x 2.10	mm inches	—
Layer build (PCB)	—	1.57 0.062	—	mm inches	4-Layer
Dielectric material (PCB)	—	—	—	—	FR4
Power					
Current consumption	—	—	—	mA	Varies with operational mode, see datasheet.
Temperature					
Operating temperature (see note)	-40	+25	+70	°C	Operating temperature is limited to +70 °C due to switches. Basic circuit is good for a maximum temperature of +85 °C.
Storage temperature	-30	+25	+70	°C	—

Table 1. FRDM-KW24D512 platform specifications (continued)

Parameter	Min	Typ	Max	Units	Notes/Conditions
RF					
IEEE 802.15.4 frequency range	2405	—	2480	MHz	All 16 channels in the 2450 MHz band
Operation frequency	2360	—	2480	MHz	—
RF Receiver					
Saturation (maximum input level)	—	+0	—	dBm	See data sheet
Sensitivity for 1% packet error rate (PER) (+25 °C) 802.15.4	—	-102	—	dBm	See data sheet
RF Transmitter					
RF Power Output	-35	—	+8	dBm	Programmable in steps. At the antenna feed with no harmonic trap. [1]
2nd harmonic	—	≤40	≤35	dBm	See data sheet
3rd harmonic	—	≤40	≤35	dBm	See data sheet
Regulatory Approval					
FCC	—	—	—	—	Product is approved according to the FCC part 15 standard
CE (ETSI)	—	—	—	—	Product is approved according to the EN 300 328 V1.7.1 (2006-10) standard
CE (EMC)	—	—	—	—	Product is approved according to the EN 301 489-1 V1.6.1 (2005-09) and EN 301 489-17 V1.2.1 (2002-08) standards
Safety					
UL	—	—	—	—	Product is approved according to the IEC 60950-1 and EN 60950-1, First Edition standards
Environment					
RoHS	—	—	—	—	Product complies with the EU Directive 2002/95/EC of 27 January 2003
WEEE	—	—	—	—	Product complies with the EU Directive 2002/95/EC of 27 January 2003

[1] Harmonic trap adds 1 to 2 dB of loss.

4.2 Functional description

The FRDM-KW24D512 platform is built around the MKW24D512 transceiver in a 63-pin (56-pin usable) LGA package. The MKW24D512 device features a IEEE Std. 802.15.4 radio frequency transceiver and a Kinetis family low-power, mixed-signal ARM Cortex-M4 MCU in a single package. The

FRDM-KW24D512 platform is intended as an evaluation platform and as a building block for application development. The four-layer platform provides the MKW24D512 transceiver with the required RF circuitry, 32 MHz reference oscillator crystal, and power supply bypassing. The layout for this base level functionality can be used as a reference layout for your target platform. Figure 5 shows a simple block diagram.

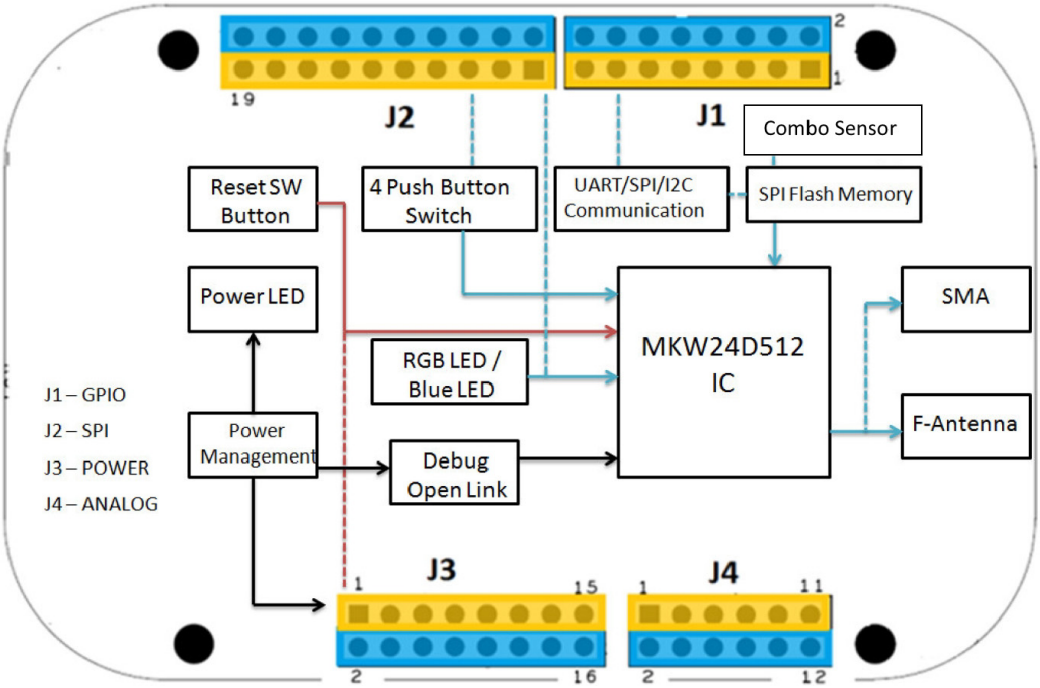

Figure 5. FRDM-KW24D512 block diagram

4.2.1 RF performance and considerations

The FRDM-KW24D512 development platform includes a 1 mW nominal output PA with internal voltage controlled oscillator (VCO), integrated transmit/receive switch, onboard power supply regulation, and full spread-spectrum encoding and decoding. Key specifications for the MKW24D512 transceiver are:

- Programmable output power from -35 dBm to +8 dBm at the SMA, no trap.
- Typical sensitivity is -102 dBm (@1% PER for 20 byte payload packet).
- Frequency range is 2360 to 2480 MHz.
- Differential bidirectional RF input/output port with integrated transmit/receive switch.
- “F” printed metal antenna for a small footprint, low cost design.
- Platform features a low component count RF matching network with off-chip 1:1 Balun.

The layout has provision for out-of-band signal suppression (components L5 and C19) if required. Figure 6 shows the typical topology for the RF circuitry. A footprint is available to install the RF connector J48 for measurement purposes. When using J48, install C17 and remove C18.

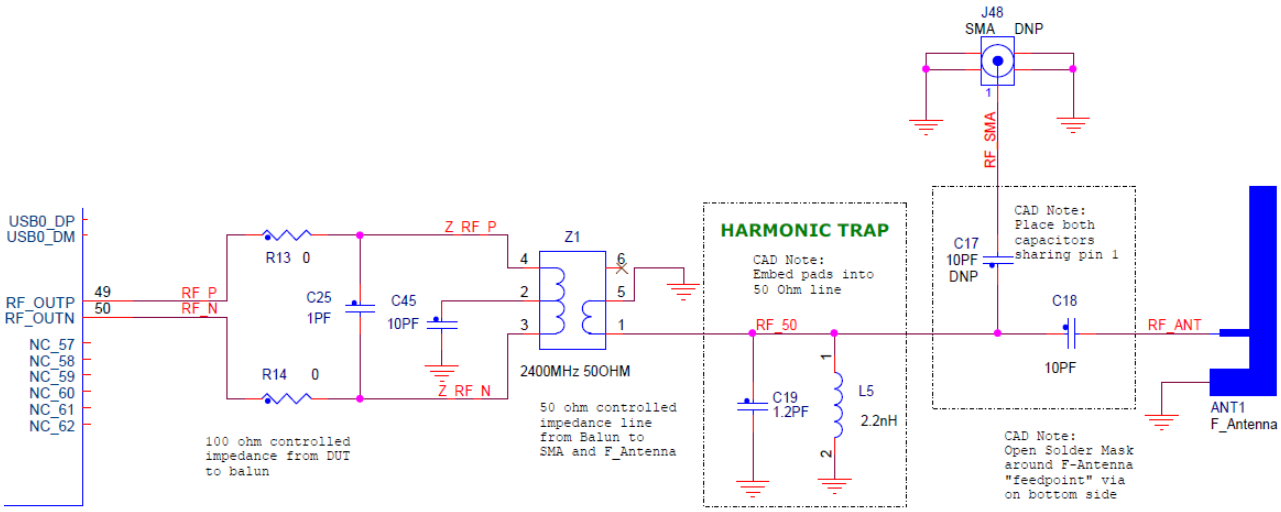

Figure 6. FRDM-KW24D512 RF circuitry

4.2.2 Clocks

The FRDM-KW24D512 provides two clocks:

- 32 MHz Reference Oscillator: Figure 7 shows the external 32 MHz external crystal Y1. This mounted crystal must meet the specifications outlined in the AN3251 application note (AN3251). The IEEE Std. 802.15.4 requires that the frequency be accurate to less that ±40 ppm.
  - Capacitors C21 and C22 provide the bulk of the crystal load capacitance. At 25°C, it is desired to have the frequency accurate to ±10 ppm or less to allow for temperature variation.
  - To measure the 32 MHz oscillator frequency, signal CLKOUT (PTA18/CLK_OUT) can optionally be programmed to provide a buffered output clock signal.
- Optional 32.768 kHz Crystal Oscillator: Provision is also made for a secondary 32.768 kHz crystal Y2 (see Figure 8). This oscillator can be used for a low-power accurate time base.
  - The module comes provided with this Y2 crystal and its load capacitors C23 and C24.
  - Load capacitors C23 and C24 provide the entire crystal load capacitance. There is no onboard trim capacitance.
  - The 32 kHz oscillator components are supplied, but not enabled. Zero-ohm resistors R82 and R83 to disable 32 kHz.

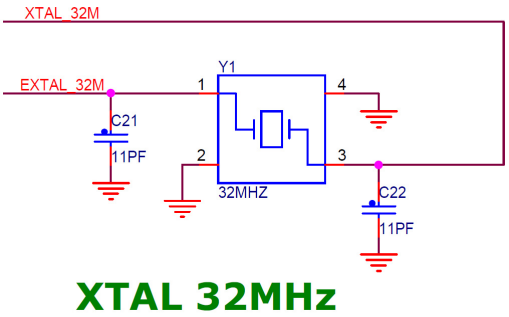

Figure 7. FRDM-KW24D512 platform's 32 MHz reference oscillator circuit

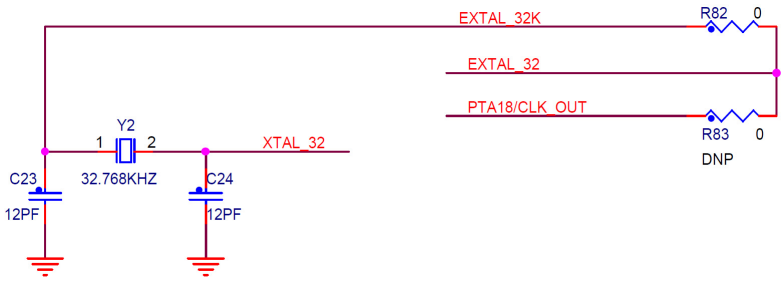

Figure 8. FRDM-KW24D512 platform's 32.768 kHz optional oscillator circuit

4.2.3 Power management

There are several different ways to power and measure current on the FRDM-KW24D512 platform. The FRDM-KW24D512 power management circuit is shown in Figure 9.

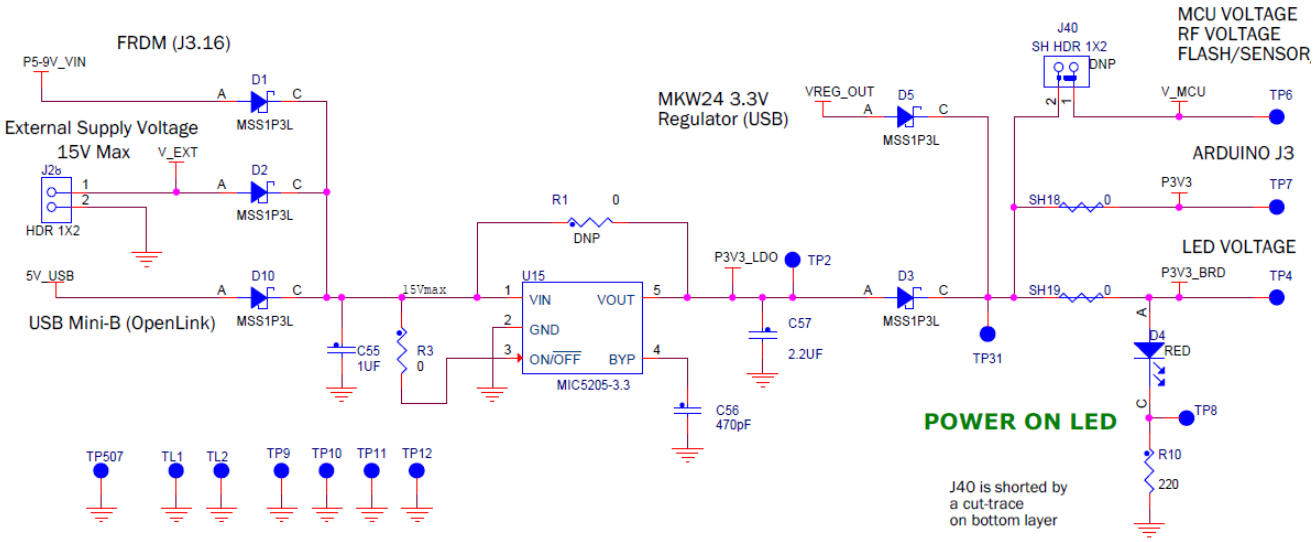

Figure 9. FRDM-KW24D512 platform's power management circuit

The FRDM-KW24D512 platform has the flexibility to be powered in several configurations:

- The platform can be supplied through the micro USB type B connector (J16), which provides P5V_USB to LDO 3V3.
- The platform can be supplied through the development platform's headers, which provide either P3.3V or P5-9V_VIN on header J3 pin 16 to LDO 3V3.
- The platform can be supplied from an external DC supply in the following way:
  — Connect an adaptor capable of suppling more than 3.3 VDC (15 V maximum) to J28 header.

Additionally, J40, a two-pin 1x2 cut-trace header, provides current to the MCU and the transceiver. A red LED marked as LED D4 is available as a power indicator.

Power headers provide the means to supply either the LED, MCU, or peripheral circuits. Current measurements can be made by inserting a current meter in place of a designated jumper. Connection configurations are described in Table 2.

Table 2. Power distribution headers

Supply designation	Header pins	Description
V_MCU J40	1 - 2	Supply voltage to MCU, transceiver, and peripherals • Jumper is shorted by a cut-trace on the bottom layer • Usage: Measure MCU current
P3V3 SH18	—	Supply voltage to header • Normally traced
P3V3_BRD SH19	—	Supply voltage to LEDs, switches, and some modules • Normally traced

4.2.4 FRDM-KW24D512 peripheral functions

The FRDM-KW24D512 development platform includes the NXP Freedom platform headers to interface with the general purpose functions and to assist in implementing targeted applications. The FRDM-KW24D512 platform also has alternate port functions routed to those interface headers where off-board FRDM development platform peripherals can be used.

4.2.4.1 Serial flash (SPI interface)

Component U13 is an AT45DB161E 16 Mbit (2 Mbyte) serial flash memory with SPI interface. The memory is useful for over-the-air programming (OTAP) and for storage of non-volatile system data or parameters. Figure 10 shows the memory circuit.

- The memory power supply is P3V3_BRD.
- Place J38 and J39 Jumpers to perform SPI communication with the serial flash module.

- The SPI Write Protect and Reset has discrete pullup resistors

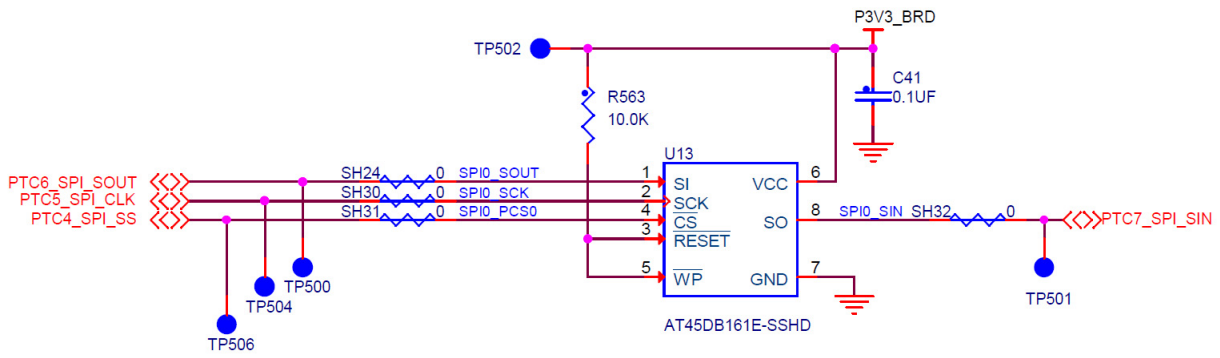

Figure 10. AT45DB161E (2 Mbyte) serial flash memory

4.2.4.2 Combo sensor (I^2C interface)

The component U16 is an NXP FXOS8700CQ 6-axis sensor with integrated linear accelerometer and magnetometer, very low-power consumption, and I^2C selectable. Figure 11 shows the sensor circuit.

- The sensor power supply is P3V3_BRD.
- Discrete pullup resistors for the I^2C port are provided.
- One interrupt signal.

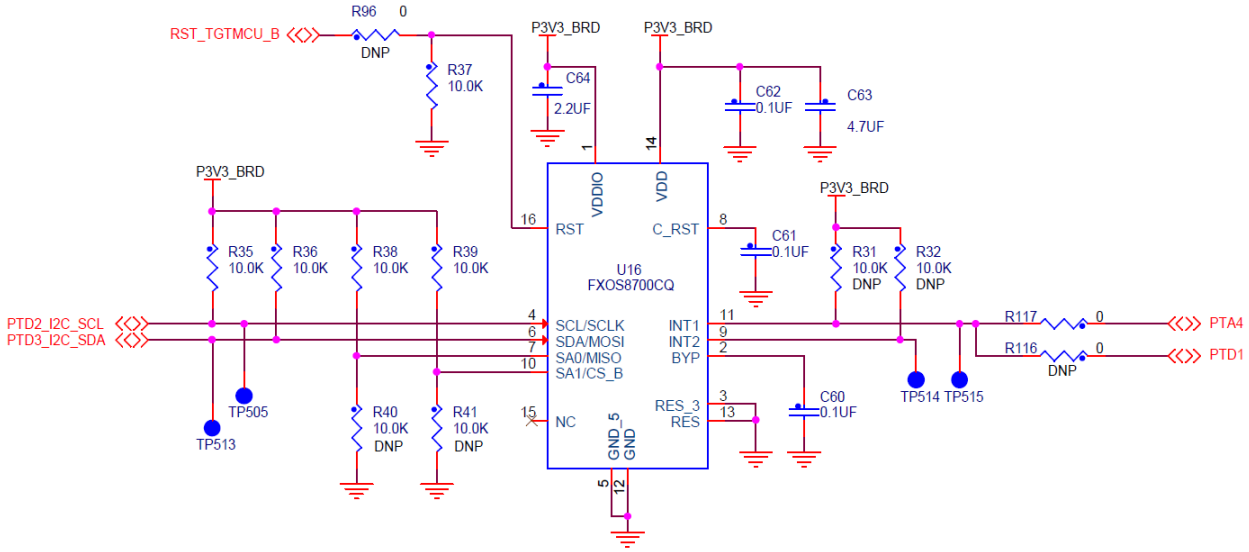

Figure 11. FXOS8700CQ combo sensor

4.2.4.3 Interface connectors J1, J2, J3 and J4

The four connectors J1, J2, J3, and J4 are 100 mil pitch, pin headers mounted on the front (component side) supporting the Freedom standard connector.

- P3V3, 5V_USB, and P5-9V_VIN provide the headers connector with its supply voltage
  - Peripheral I/O to the FRDM-KW24D512 platform and the Freedom development platform supply must use this same voltage supply to avoid potential damage.

The pin definitions for the headers are shown in Table 3 and Table 4.

Table 3. J2 and J1 connector

Header pin No	J2	Description	Header pin No	J1	Description
	MKW24D512 pin name			MKW24D512 pin name	
1	NC	NC	1	PTE0_TX	UART1_TX
2	PTA19	PTA19 (D8/int)	2	PTD7_TX	UART0 (D0/RX/INT)
3	NC	NC	3	PTE1_RX	UART1_RX
4	PTA18/EXTAL0	PTA18 (D9/int)	4	PTD6_RX	UART0 (D1/TX/INT)
5	NC	NC	5	PTE2_CTS	UART1_CTS
6	PTC4_SPI_SS	PTC4 (D10/SPI_SS)	6	PTD5_CTS	UART0 (D2/INT)
7	NC	NC	7	PTE3_RST	UART1_RST
8	PTC6_SPI_SOUT	PTC6 (D11/MOSI)	8	PTD4_RST	UART0 (D3/PWM/INT)
9	NC	NC	9	NC	NC
10	PTC7_SPI_SIN	PTC7 (D12/MISO)	10	GPIO2	GPIO2 (D4/INT)
11	NC	NC	11	NC	NC
12	PTC5_SPI_CLK	PTC5 (D13/SCK)	12	GPIO1	GPIO1 (D5/PWM/INT)
13	NC	NC	13	NC	NC
14	GND	GND	14	PTE4	PTE4
15	NC	NC	15	NC	NC
16	P3V3_BRD	P3V3_BRD	16	PTD1	PTD1 (D7/CMP/INT)
17	NC	NC	—	—	—
18	PTD3_I2C_SDA	PTD3 (D14/Ana/Int)	—	—	—
19	NC	NC	—	—	—
20	PTD2_I2C_SCL	PTD2 (D15/Ana/Int)	—	—	—

Table 4. J3 and J4 connector

Header pin No	J3	Description	Header pin No	J4	Description
	MKW24D512 pin name			MKW24D512 pin name	
1	NC	NC	1	NC	NC
2	NC	NC	2	ANT_A	A0/INT
3	NC	NC	3	PTA0	JTAG_TCLK
4	P3V3	P3V3	4	ANT_B	A1/INT
5	NC	NC	5	PTA1	JTAG_TDI
6	RST_B	RST_TGTMCU_B	6	RX_SWITCH	A2/INT
7	NC	NC	7	PTA2	JTAG_TDO
8	P3V3	P3V3	8	TX_SWITCH	A3_INT
9	NC	NC	9	PTA3 and RST_TGTMCU_B	JTAG_TMS
10	P5V	P5V	10	NC	NC
11	NC	NC	11	PTA4	NMI_B
12	GND	GND	12	NC	NC
13	NC	NC	—	—	—
14	GND	GND	—	—	—
15	NC	NC	—	—	—
16	P5-9V_VIN	Unregulated Voltage	—	—	—

4.3 Schematic, platform layout, and bill of material

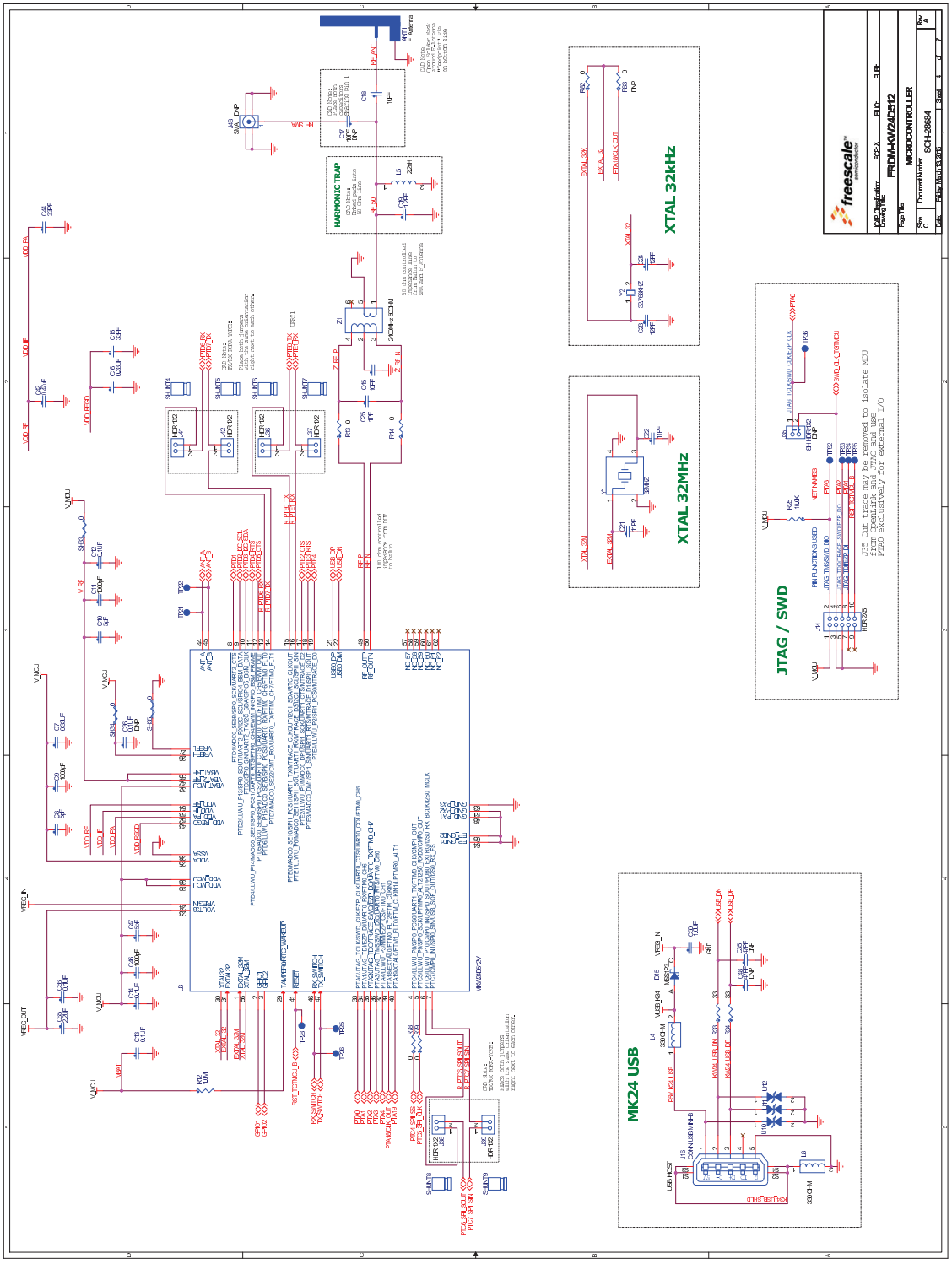

Figure 12. FRDM-KW24D512 platform schematic rev. A (1/4)

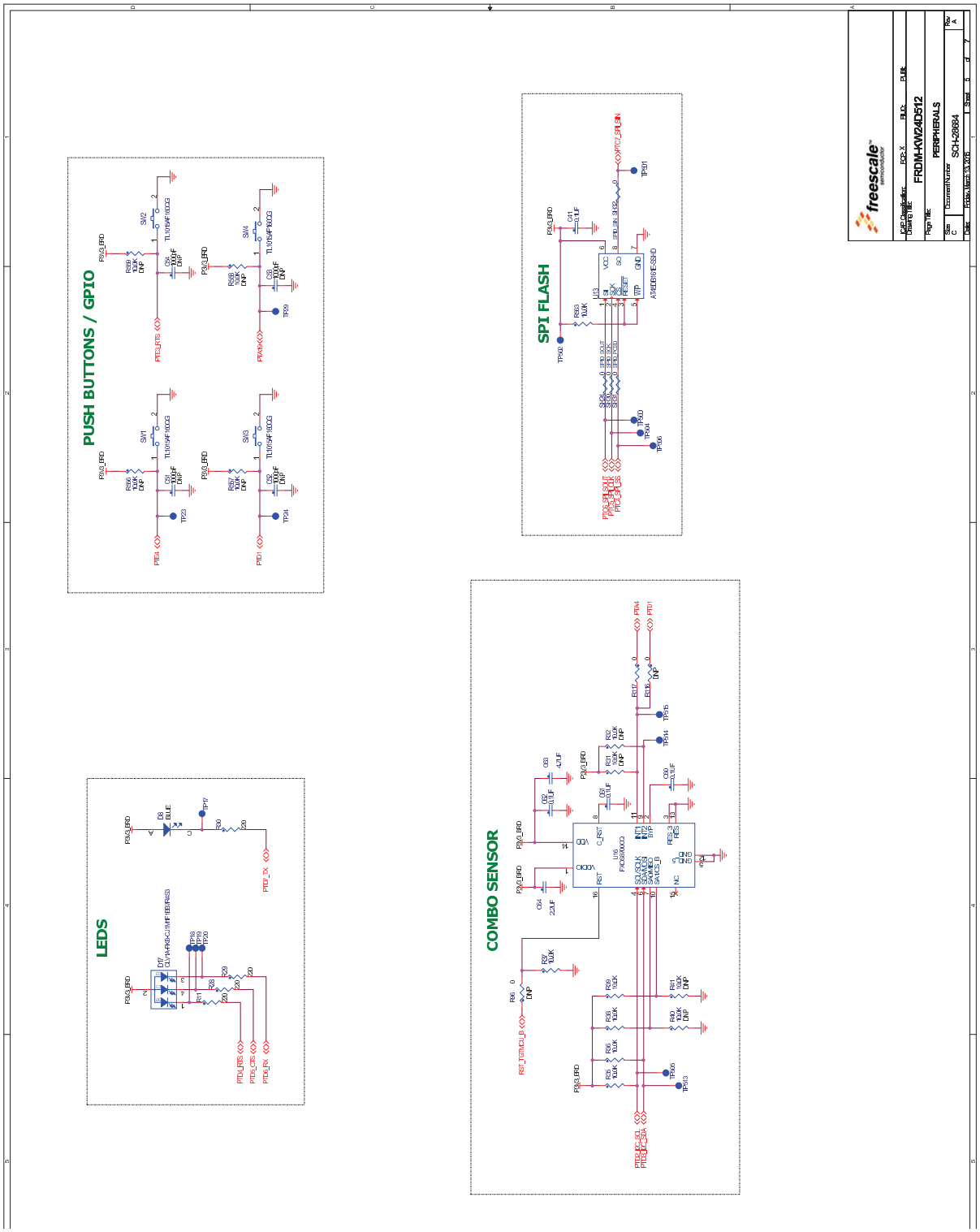

Figure 13. FRDM-KW24D512 platform schematic rev. A (2/4)

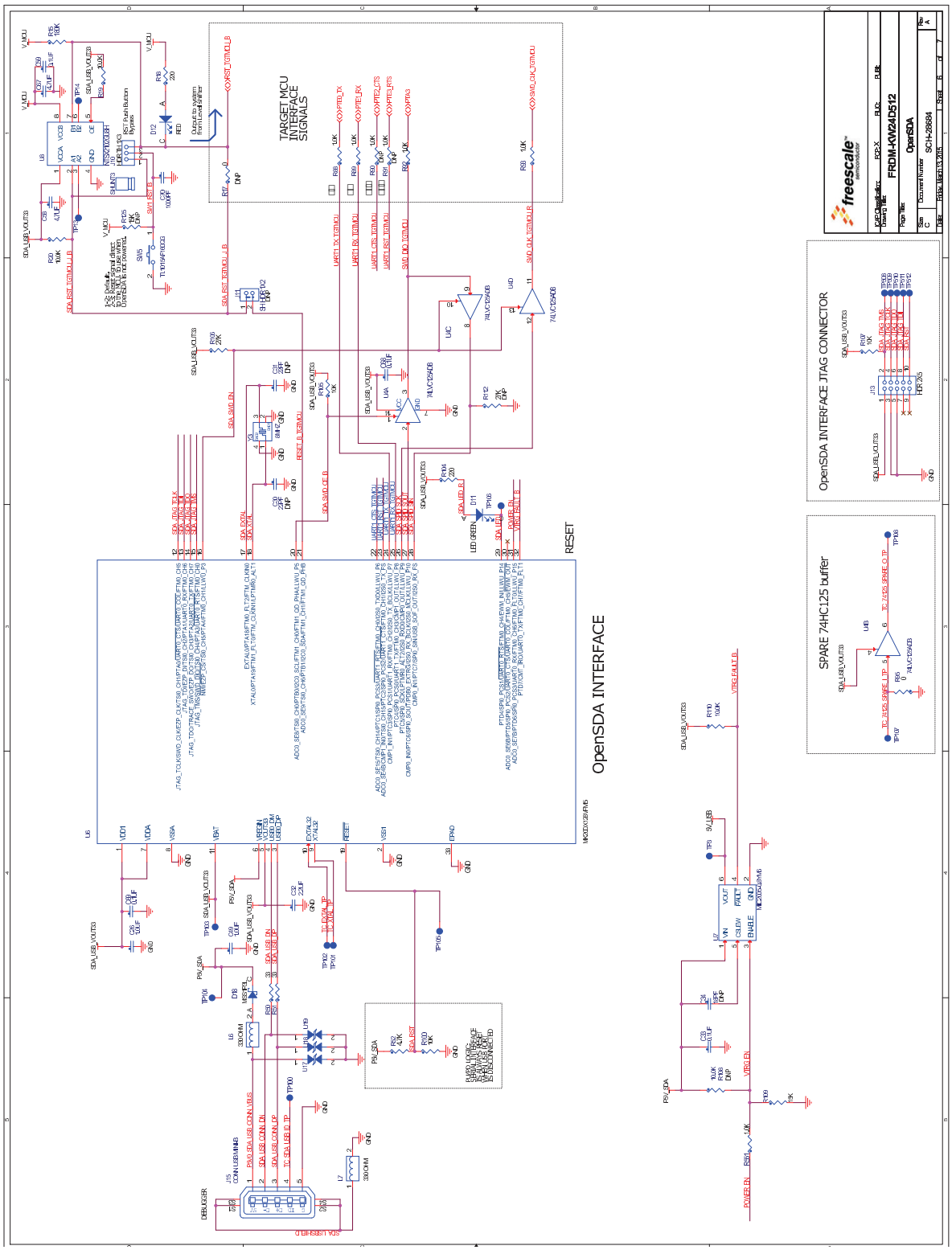

Figure 14. FRDM-KW24D512 platform schematic rev. A (3/4)

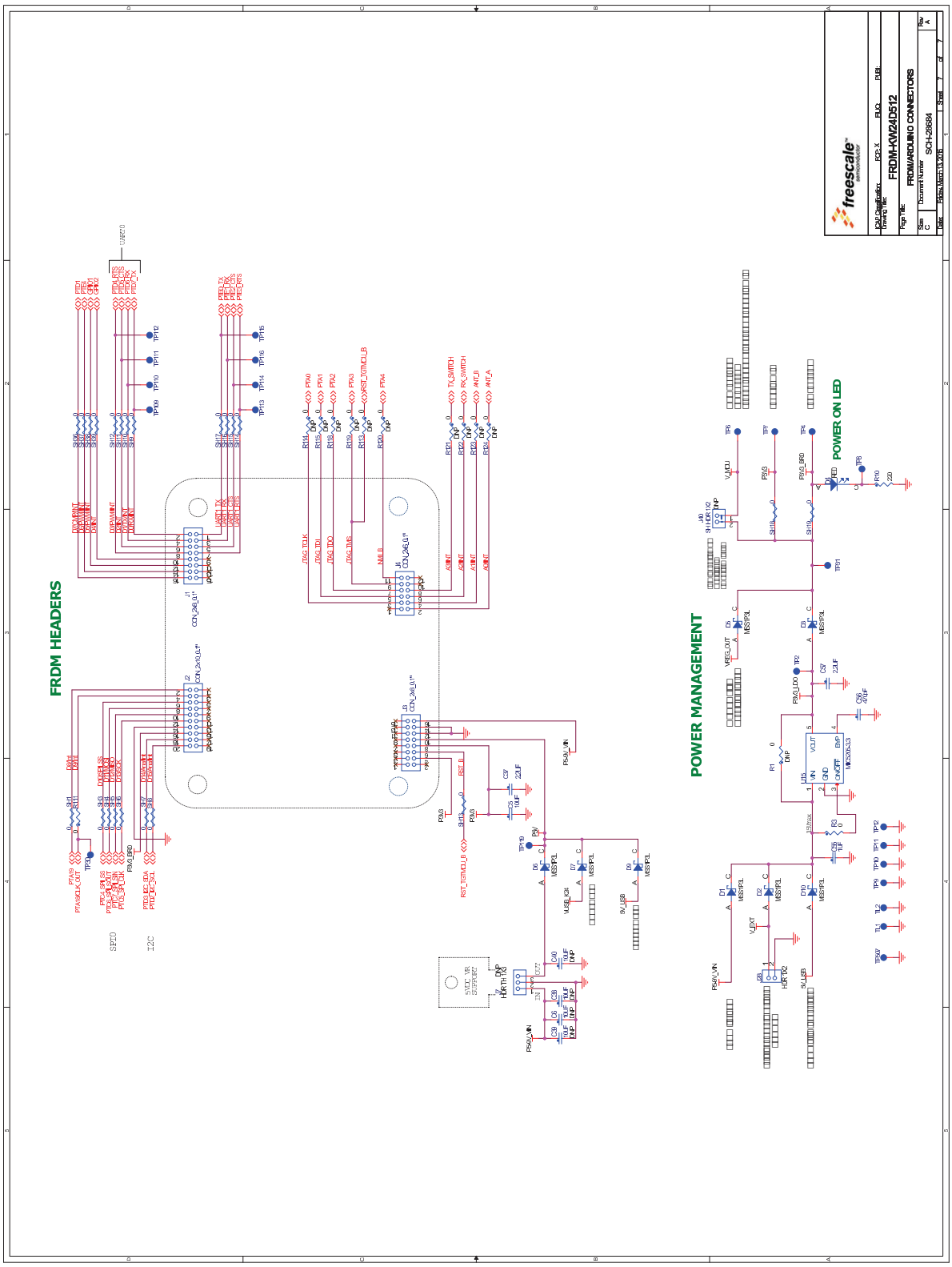

Figure 15. FRDM-KW24D512 platform schematic rev. A (4/4)

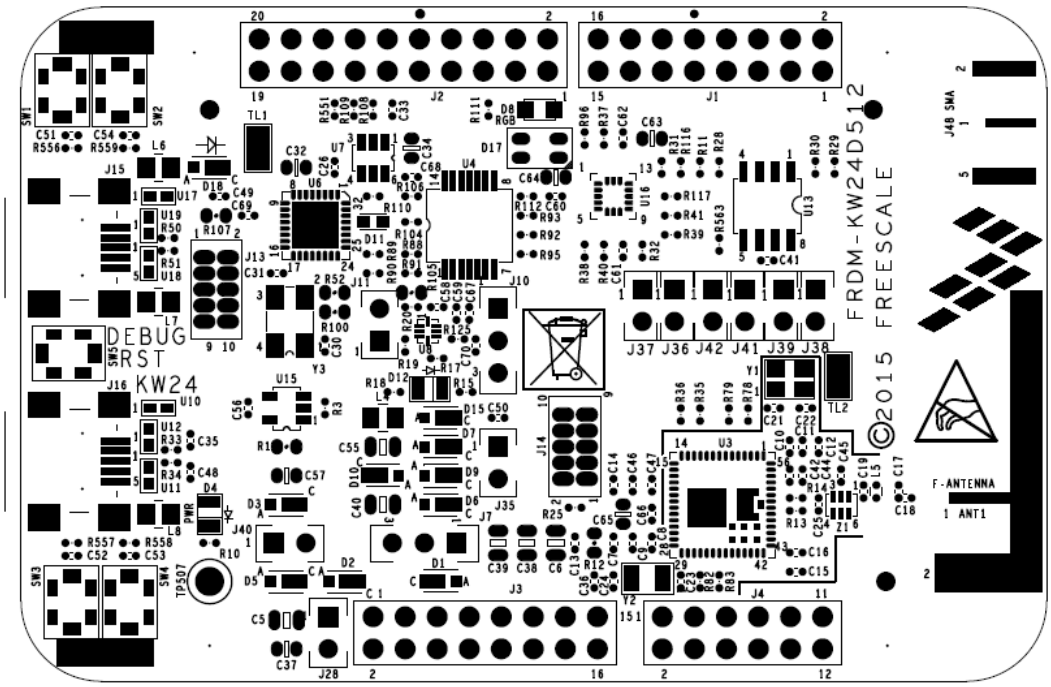

Figure 16. FRDM-KW24D512 platform PCB component location (top view)

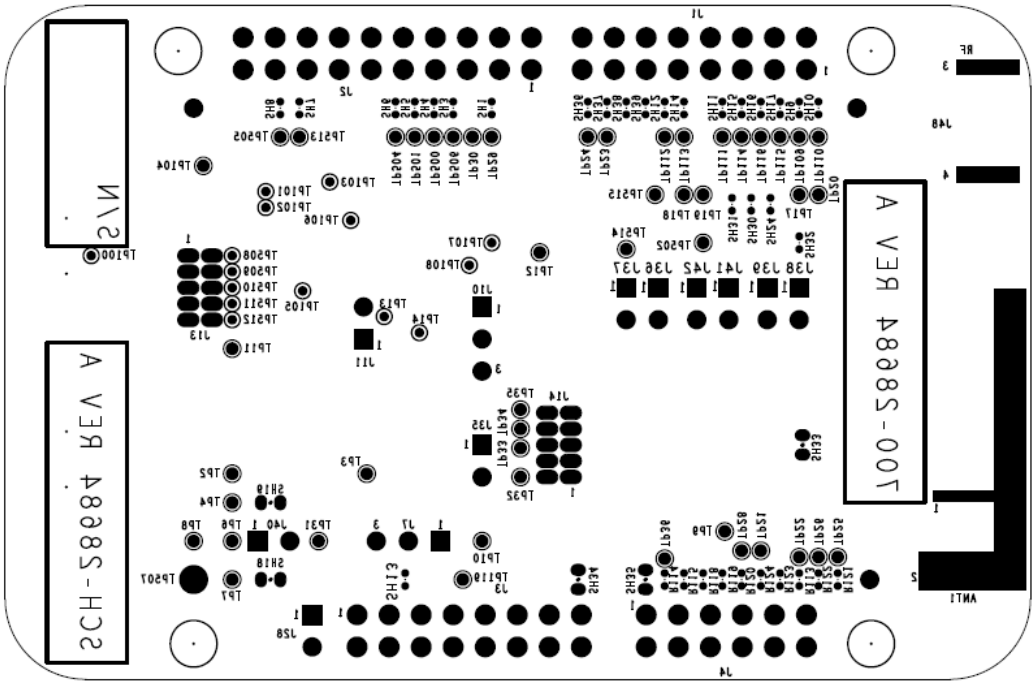

Figure 17. FRDM-KW24D512 platform PCB test points

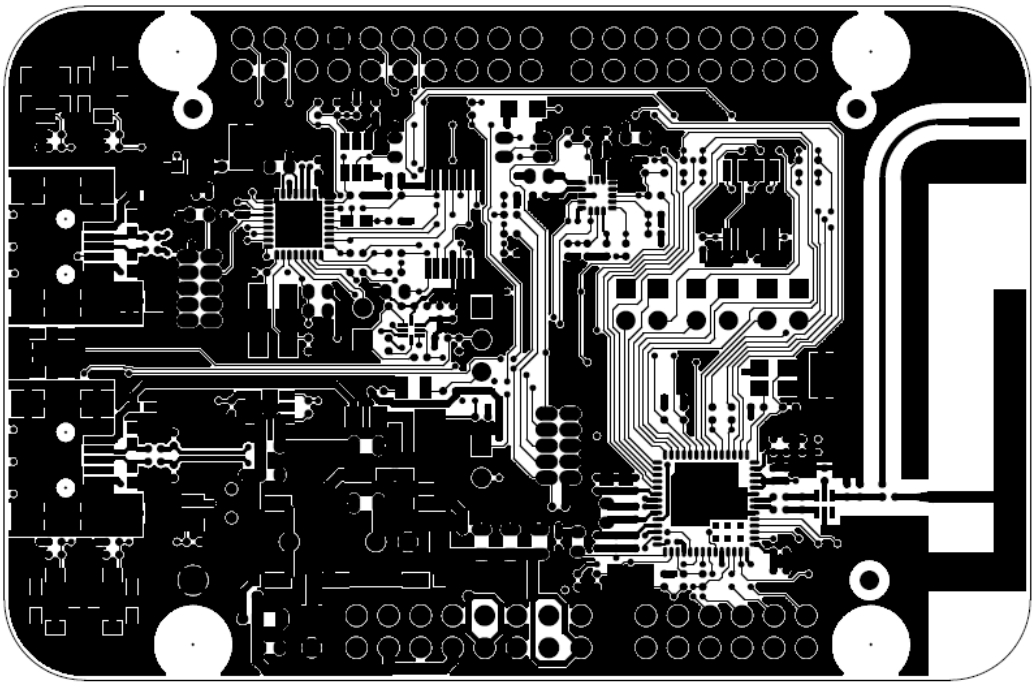

Figure 18. FRDM-KW24D512 platform PCB layout (top view)

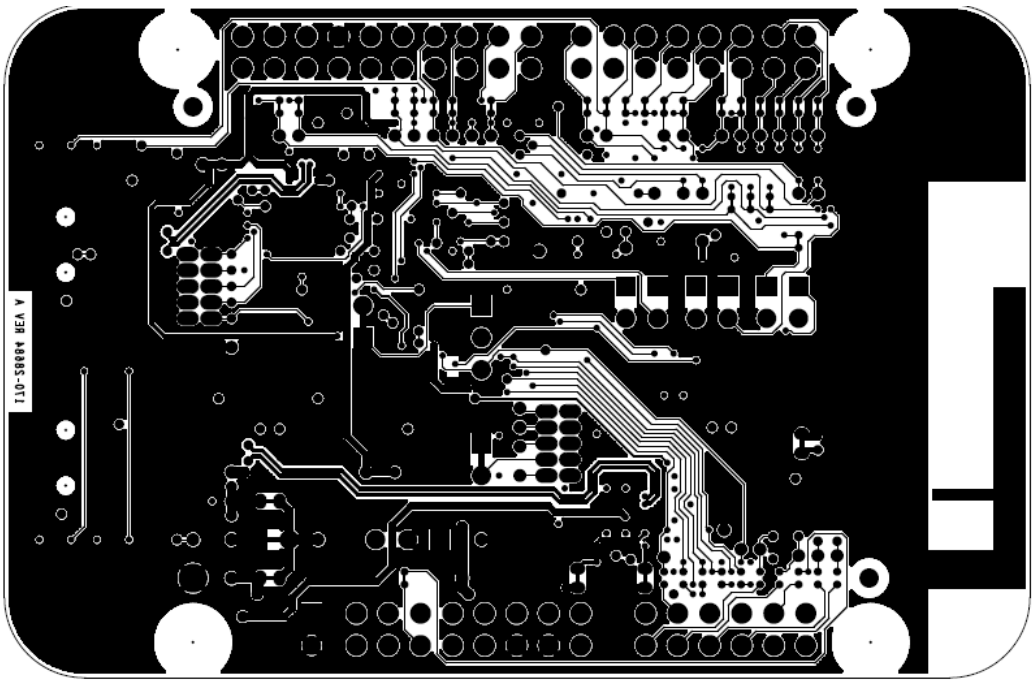

Figure 19. FRDM-KW24D512 platform PCB layout (bottom view)

4.3.1 Bill of materials

Table 5. Bill of materials (common parts for all frequency bands) (Sheet 1 of 4)

Item	Qty	Reference	Value	Description	Mfg. name	Mfg. part number
1	1	ANT1	F_ANTENNA	PCB F ANTENNA, NO PART ORDER	NOT A PART	NOT A PART
2	1	C25	1PF	CAP CER 1PF 50V ±0.05PF C0G 0402	MURATA	GRM1555C1H1R0WA01D
3	1	C19	1.2PF	CAP CER 1.2PF 50V ±0.PF NP0 0402	MURATA	GRM1555C1H1R2WA01D
4	3	C8,C10,C47	5PF	CAP CER 5PF 50V 5% C0G 0402	MURATA	GJM1555C1H5R0CB01D
5	2	C18,C45	10PF	CAP CER 10PF 50V 5% C0G 0402	AVX	04025A100JAT2A
6	1	C17 **DNP**	10PF	CAP CER 10PF 50V 5% C0G 0402	AVX	04025A100JAT2A
7	2	C21,C22	11PF	CAP CER 11PF 50V 5% C0G 0402	KEMET	CBR04C110F5GAC
8	2	C23,C24	12PF	CAP CER 12PF 50V 5% C0G 0402	MURATA	GRM1555C1H120JZ01D
9	1	C34 **DNP**	18PF	CAP CER 18PF 50V 5% C0G 0603	YAGEO AMERICA	CC0603JRNPO9BN180
10	2	C30,C31 **DNP**	22PF	CAP CER 22PF 50V 5% C0G 0402	AVX	04025A220JAT2A
11	2	C15,C44	33PF	CAP CER 33PF 50V 5% C0G 0402	KEMET	C0402C330J5GACTU
12	2	C35,C48 **DNP**	47PF	CAP CER 47PF 16V 5% C0G 0402	AVX	0402YA470JAT2A
13	1	C56	470PF	CAP CER 470PF 16V 10% X7R 0402	KEMET	C0402C471K4RACTU
14	4	C9,C11,C46,C70	1000PF	CAP CER 1000PF 50V 5% C0G 0402	MURATA	GRM1555C1H102JA01D
15	4	C51,C52,C53,C54 **DNP**	1000PF	CAP CER 1000PF 50V 5% C0G 0402	MURATA	GRM1555C1H102JA01D
16	11	C12,C13,C14,C33, C41,C59,C60,C61, C62,C66,C68	0.1UF	CAP CER 0.1UF 16V 10% X7R 0402	KEMET	C0402C104K4RAC
17	2	C36,C69 **DNP**	0.1UF	CAP CER 0.1UF 16V 10% X7R 0402	KEMET	C0402C104K4RAC
18	2	C7,C16	0.33UF	CAP CER 0.33UF 6.3V 10% X5R 0402	MURATA	GRM155R60J334KE01D
19	1	C42	0.47UF	CAP CER 0.47UF 6.3V 10% X5R 0402	KEMET	C0402C474K9PACTU
20	3	C26,C49,C50	1.0UF	CAP CER 1.0UF 10V 10% X5R 0402	YAGEO AMERICA	CC0402KRX5R6BB105
21	1	C55	1UF	CAP CER 1UF 10V 10% X7R 0805	MURATA	GRM21BR71A105KA01L
22	5	C32,C37,C57,C64, C65	2.2UF	CAP CER 2.2UF 10V 10% X7R 0603	TAIYO YUDEN	LMK107B7225KA-T
23	2	C58,C67	4.7UF	CAP CER 4.7UF 6.3V 20% X5R 0402	MURATA	GRM155R60J475ME47D
24	1	C63	4.7UF	CAP CER 4.7UF 10V 10% X7R 0603	KEMET	C0603C475K8PACTU
25	1	C5	10UF	CAP CER 10UF 10V 10% X7R 0805	MURATA	GRM21BR71A106KE51L
26	4	C6,C38,C39,C40 **DNP**	10UF	CAP CER 10UF 10V 10% X7R 0805	MURATA	GRM21BR71A106KE51L
27	10	D1,D2,D3,D5,D6,D7, D9,D10,D15,D18	MSS1P3L	DIODE SCH 1A 20V MICROSMP SMT	VISHAY INTERTECHNOLOGY	MSS1P3L-M3/89A
28	2	D4,D12	RED	LED RED SGL 20MA SMT 0805	LITE ON	LTST-C171KRKT
29	1	D8	BLUE	LED BLUE SGL 20MA SMT 0805	LITE ON	LTST-C171TBKT
30	1	D11	LED GREEN	LED GRN SGL 20MA 0603	OSRAM	LG L29K-G2J1-24-Z
31	1	D17	CLV1A-FKB-CJ1 M1F1BB7R4S3	LED - RGB, CLV1A-FKB-CJ1M1F1BB7R4S3, 675/527/470MCD(TYP.), SMD	CREE	CLV1A-FKB-CJ1M1F1BB 7R4S3

Table 5. Bill of materials (common parts for all frequency bands) (Sheet 2 of 4)

Item	Qty	Reference	Value	Description	Mfg. name	Mfg. part number
32	2	J1,J3	CON_2X8_0.1"	CON 2X8 FEMALE 100MIL SP 394H AU	SAMTEC	SSW-108-03-G-D
33	1	J2	CON_2X10_0.1"	CON 2X10 FEMALE 100MIL SP 394H AU	SAMTEC	SSW-110-03-G-D
34	1	J4	CON_2X6_0.1"	CON 2X6 FEMALE 100MIL SP 394H AU	SAMTEC	SSW-106-03-G-D
35	1	J7 **DNP**	HDR TH 1X3	HDR 1X3 TH 100MIL SP 339H AU 100L	SAMTEC	TSW-103-07-G-S
36	1	J10	HDR TH 1X3	HDR 1X3 TH 100MIL SP 339H AU 100L	SAMTEC	TSW-103-07-G-S
37	3	J11,J35,J40 **DNP**	SH HDR 1X2	HDR 1X2 TH 100MIL SP 330H SN 115L (BOTTOM SIDE SHORT)	SAMTEC	TSW-102-23-T-S
38	2	J13,J14	HDR 2X5	CONN,HEAD,2X5,STR,50/50 CON-2RH-10-50	SAMTEC	FTS-105-01-F-D
39	2	J15,J16	CONN USB MINI-B	CON 5 USB_MINI_B_RECEPTACLE RA SMT 0.8MM 168H AU	TE CONNECTIVITY LTD	1734035-2
40	7	J28,J36,J37,J38,J39, J41,J42	HDR 1X2	HDR 1X2 TH 100MIL SP 330H SN 115L	SAMTEC	TSW-102-23-T-S
41	1	J48 **DNP**	SMA	CON, SMA, EDGE 0.062IN, 50 OHM FEMALE 18GHZ	JOHNSON COMPONENTS INC	142-0701-851
42	4	L4,L6,L7,L8	330 OHM	IND FER BEAD 330OHM@100MHZ 2.5A -- SMT	TDK	MPZ2012S331A
43	1	L5	2.2NH	IND -- 0.0022UH@100MHZ 300MA 0.0003UH 0402	MURATA	LQG15HS2N2S02D
44	9	R3,R13,R14,R78, R79,R82,R95,R111, R117	0	RES MF ZERO OHM 1/16W 5% 0402	VISHAY	CRCW04020000Z0ED
45	14	R17,R83,R96,R113, R114,R115,R116, R118,R119,R120, R121,R122,R123, R124 **DNP**	0	RES MF ZERO OHM 1/16W 5% 0402	VISHAY	CRCW04020000Z0ED
46	1	R1 **DNP**	0	RES MF ZERO OHM 1/10W -- 0603	VISHAY INTERTECHNOLOGY	CRCW06030000Z0EA
47	4	R33,R34,R50,R51	33	RES MF 33.0 OHM 1/16W 1% 0402	VISHAY	CRCW040233R0FKED
48	7	R10,R11,R18,R28, R29,R30,R104	220	RES MF 220 OHM 1/16W 5% 0402	VISHAY INTERTECHNOLOGY	CRCW0402220RJNED
49	5	R88,R89,R92,R93, R551	1.0K	RES MF 1.0K 1/16W 1% 0402	YAGEO AMERICA	RC0402FR-071KL
50	2	R90,R91 **DNP**	1.0K	RES MF 1.0K 1/16W 1% 0402	YAGEO AMERICA	RC0402FR-071KL
51	1	R52	4.7K	RES MF 4.7K 1/10W 5% 0603	VISHAY INTERTECHNOLOGY	CRCW06034K70JNEA
52	10	R19,R20,R25,R35, R36,R37,R38,R39, R110,R563	10.0K	RES MF 10.0K 1/16W 1% AEC-Q200 0402	VISHAY INTERTECHNOLOGY	CRCW040210K0FKED
53	9	R31,R32,R40,R41, R108,R556,R557, R558,R559 **DNP**	10.0K	RES MF 10.0K 1/16W 1% AEC-Q200 0402	VISHAY INTERTECHNOLOGY	CRCW040210K0FKED
54	3	R100,R105,R107	10K	RES MF 10K 1/10W 5% 0603	KOA SPEER	RK73B1JTTD103J
55	1	R109	15K	RES MF 15.0K 1/16W 1% 0402	BOURNS	CR0402-FX-1502GLF
56	1	R125 **DNP**	15K	RES MF 15.0K 1/16W 1% 0402	BOURNS	CR0402-FX-1502GLF
57	1	R106	27K	RES MF 27K 1/16W 5% 0402	VISHAY INTERTECHNOLOGY	CRCW040227K0JNED

Table 5. Bill of materials (common parts for all frequency bands) (Sheet 3 of 4)

Item	Qty	Reference	Value	Description	Mfg. name	Mfg. part number
58	1	R112 **DNP**	27K	RES MF 27K 1/16W 5% 0402	VISHAY INTERTECHNOLOGY	CRCW040227K0JNED
59	1	R15	180K	RES MF 180K 1/16W 1% 0402	VISHAY	CRCW0402180KFKED
60	1	R12	1.0M	RES MF 1.0M 1/10W 5% 0603	BOURNS	CR0603-JW-105ELF
61	1	SHUNT3	SHUNT	SHUNT 2.54MM 2POS	3M	969102-0000-DA
62	1	SHUNT4	SHUNT	SHUNT 2.54MM 2POS	3M	969102-0000-DA
63	1	SHUNT5	SHUNT	SHUNT 2.54MM 2POS	3M	969102-0000-DA
64	1	SHUNT6	SHUNT	SHUNT 2.54MM 2POS	3M	969102-0000-DA
65	1	SHUNT7	SHUNT	SHUNT 2.54MM 2POS	3M	969102-0000-DA
66	1	SHUNT8	SHUNT	SHUNT 2.54MM 2POS	3M	969102-0000-DA
67	1	SHUNT9	SHUNT	SHUNT 2.54MM 2POS	3M	969102-0000-DA
68	24	SH1,SH3,SH4,SH5, SH6,SH7,SH8,SH9, SH10,SH11,SH12, SH13,SH14,SH15, SH16,SH17,SH24, SH30,SH31,SH32, SH36,SH37,SH38, SH39	0	CUT TRACE RESISTOR	NOT A COMPONENT	NOT A COMPONENT
69	5	SH18,SH19,SH33, SH34,SH35	0	CUT TRACE RESISTOR	NOT A COMPONENT	NOT A COMPONENT
70	5	SW1,SW2,SW3, SW4,SW5	TL1015AF160Q G	SW SPST-NO 0.05A, 12V, SMT	E-SWITCH	TL1015AF160QG
71	2	TL1,TL2	TESTLOOP	TEST POINT PAD SIZE 3.4MM X 1.8MM SMT	KEYSTONE ELECTRONICS	5015
72	48	TP2,TP3,TP4,TP6, TP7,TP8,TP9,TP10, TP11,TP12,TP17, TP18,TP19,TP20, TP21,TP22,TP23, TP24,TP25,TP26, TP28,TP29,TP30, TP31,TP32,TP33, TP34,TP35,TP36, TP104,TP109, TP110,TP111,TP112, TP113,TP114,TP115, TP116,TP119,TP500, TP501,TP502, TP504,TP505, TP506,TP513, TP514,TP515	TPAD_040	TEST POINT PAD 40MIL DIA SMT, NO PART TO ORDER	NOT A COMPONENT	NOT A COMPONENT
73	15	TP13,TP14,TP100, TP101,TP102, TP103,TP105, TP106,TP107, TP108,TP508, TP509,TP510, TP511,TP512	TPAD_030	TEST POINT PAD 30MIL DIA SMT, NO PART TO ORDER	NOT A COMPONENT	NOT A COMPONENT
74	1	TP507	TESTLOOP_BL ACK	TEST POINT PC MULTI PURPOSE BLK TH	KEYSTONE ELECTRONICS	5011
75	1	U3	MKW24D512V	IC MCU XCVR 2.4GHZ 64KB RAM 512KB FLASH - USB 1.8-3.6V LGA63	FREESCALE SEMICONDUCTOR	MKW24D512VHA5
76	1	U4	74LVC125ADB	IC BUF QUAD TS 1.2-3.6V SSOP14	NXP SEMICONDUCTORS	74LVC125ADB

Table 5. Bill of materials (common parts for all frequency bands) (Sheet 4 of 4)

Item	Qty	Reference	Value	Description	Mfg. name	Mfg. part number
77	1	U6	MK20DX128VFM5	IC MCU FLASH 128KB 50MHZ 1.71-3.6V QFN32	FREESCALE SEMICONDUCTOR	MK20DX128VFM5
78	1	U7	MIC2005-0.8YM6	IC LIN SW PWR 0.8A 2.5-5.5V SOT23-6	MICREL	MIC2005-0.8YM6
79	1	U8	NTSX2102GU8H	IC DUAL SUPPLY XCVR 50 MBPS 5.5V XQFN8	NXP SEMICONDUCTORS	NTSX2102GU8H
80	6	U10,U11,U12,U17, U18,U19	0402ESDA-MLP	DIODE TVS BIDIR -- 30V 0402	COOPER BUSSMANN	0402ESDA-MLP1
81	1	U13	AT45DB161E-SSHD	IC FLASH 16MBIT 85MHZ 2.5-3.6V SOIC8	ATMEL	AT45DB161E-SSHD-T
82	1	U15	MIC5205-3.3	LDO 150MA 16V SOT23-5	MICREL	MIC5205-3.3YM5
83	1	U16	FXOS8700CQ	IC FXOS8700CQ 6-AXIS SENSOR 1.95V-3.6V, QFN-16	FREESCALE SEMICONDUCTOR	FXOS8700CQR1
84	1	Y1	32MHZ	XTAL 32MHZ 9PF -- SMT 3.2X2.5MM	NDK	EXS00A-CS02368
85	1	Y2	32.768KHZ	XTAL 32.768KHZ SMT ROHS COMPLIANT	EPSON ELECTRONICS	FC-135 32.7680KA-A3
86	1	Y3	8MHZ	XTAL 8MHZ 20PPM PAR 18PF ESR 200OHM SMT	ABRACON CORPORATION	ABM3B-8.000MHZ-B2-T
87	1	Z1	2400MHZ 50OHM	XFMR BALUN 2400 ±100MHZ SMT	MURATA	LDB212G4005C-001

5 PCB Manufacturing Specifications

This section provides the specifications used to manufacture the FRDM-KW24D512 development printed circuit board (PCB) described in this document.

The FRDM-KW24D512 PCBs must comply with the following:

- The PCB must comply with Perfag1D/3C (www.perfag.dk/en/).
- The PCB manufacturer's logo is required.
- The PCB production week and year code is required.
  - — The manufacturer's logo and week/year code must be stamped on the back of the PCB solder mask.
  - — The PCB manufacturer cannot insert text on the PCB either in copper or in silkscreen without written permission from Freescale Semiconductor, Inc.
- The required Underwriter's Laboratory (UL) Flammability Rating:
  - — The level is 94V-0 (Standard for Tests for Flammability of Plastic Materials for Parts in Devices and Appliancesl).
  - — The UL information must be stamped on the back of the PCB solder mask

NOTE

- A complete set of design files is available for the FRDM-KW24D512 transceiver at the NXP website under "Software and Tools." These reference designs should be used as a starting point for a custom application. (TWR-KW2x: Kinetis KW2x Tower System Modules)
- The *Freescale IEEE 802.15.4 / ZigBee Package and Hardware Layout Considerations Reference Manual* (ZHDCRM) is also available at the same website to provide additional design guidance.

5.1 Single PCB construction

This section describes individual PCB construction details.

- The FRDM-KW24D512 PCBs are four-layer, multilayer designs.
- The PCBs contain no blind, buried, or micro vias.
- PCB data:
  - FRDM-KW24D512 platform's size: Approximately 81 mm x 53 mm (3.20 inches x 2.10 inches).
  - FRDM-KW24D512 platform's final thickness (Cu/Cu): 1.57 mm (0.62 inches) ±10% (excluding solder mask).

Table 6 defines some of the layers of the completed PCB. The artwork identification refers to the name of the layer in commonly used terms.

Table 6. FRDM-KW24D512 layer by layer overview

Layer	Artwork Identification	File Name
1	Silkscreen Top	PSS.art
2	Top Layer Metal	L1_PS.art
3	Ground Layer	L2_GND.art
4	Signal Layer	L3_INT_1.art
5	Bottom Layer Metal	L4_SS.art
6	Silkscreen Bottom	SSS.art

CAUTION:

The FRDM-KW24D512 development platform contains high-frequency 2.4 GHz RF circuitry. As a result, RF component placement, line geometries and layout, and spacing to the ground plane are critical parameters. As a result, BOARD STACKUP GEOMETRY IS CRITICAL. Dielectric and copper thicknesses and spacing must not be changed. Follow the stackup (see Figure 20) information provided with the reference design.

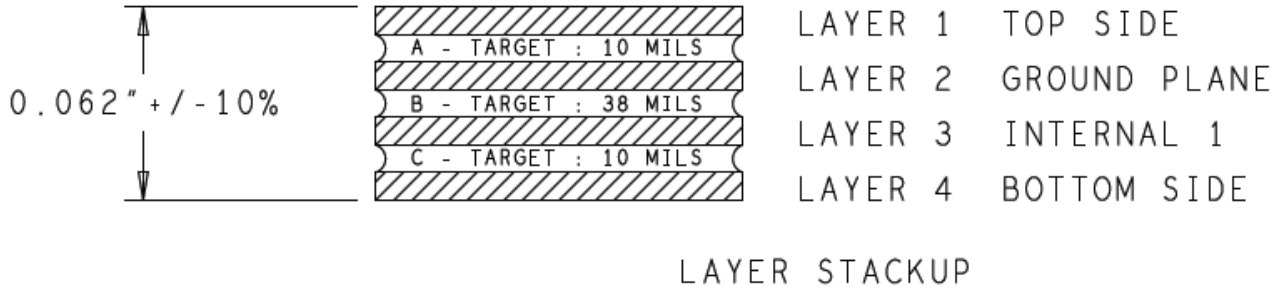

Figure 20. FRDM-KW24D512 PCB stackup cross-section (four layer)

- A solder mask is required.
- A silk screen is required.

5.2 Panelization

The panel size can be negotiated depending on production volume.

5.3 Materials

The PCB composite materials must meet the following requirements:

- Laminate: The base material (laminate) must be FR4. If the laminate material is changed, the RF electrical characteristics may change and degrade the RF performance.
- Copper foil:
  - Top and Bottom copper layers must be 1 oz. copper.
  - Interior layers must be 1 oz. copper.
- Plating: All pad plating must be Hot Air Levelling (HAL).

5.4 Solder mask

The solder mask must meet the following requirements:

- Solder mask type: Liquid Film Electra EMP110 or equivalent.
- Solder mask thickness: 10–30 µm.

5.5 Silk screen

The silk screen must meet the following requirements:

- Silk screen color: White.
- Silk screen must be applied after application of solder mask if solder mask is required.
- The silk screen ink must not extend into any plated-through-holes.
- The silk screen must be clipped back to the line of resistance.

5.6 Electrical PCB testing

- All PCBs must be 100% tested for opens and shorts.
- Impedance measurement: An impedance measurement report is not mandatory.

5.7 Packaging

Packaging for the PCBs must meet the following requirements:

- Finished PCBs must remain in panel.
- Finished PCBs must be packed in plastic bags that do not contain silicones or sulphur materials. These materials can degrade solderability.

5.8 Hole specification/tool table

See the *ncdrill-1-4.tap* file included with the Gerber files and the *FAB-28684.pdf* file.

5.9 File description

Files included with the download include Design, Gerber, and PDF files. Gerber files are RS-274x format. Not all files included with the Gerber files are for PCB manufacturing.

PDF files included are:

- *FAB-28684.pdf*—FRDM-KW24D512 platform fabrication drawing
- *GRB-28684.zip*—FRDM-KW24D512 Metal layers, solder mask, solder paste and silk screen
- *SPF-28684.pdf*—FRDM-KW24D512 Schematic

You can download those files from the Design Files package on the web page: FRDM-KW24D512: NXP Freedom Development Platform for Kinetis KW2x MCUs.

Design files are in Allegro format with OrCAD® schematic capture.

6 Revision History

Revision number	Date	Substantive changes
0	05/2016	Initial release

How to Reach Us:

Home Page:
nxp.com

Web Support:
nxp.com/support

Information in this document is provided solely to enable system and software implementers to use Freescale products. There are no express or implied copyright licenses granted hereunder to design or fabricate any integrated circuits based on the information in this document.

Freescale reserves the right to make changes without further notice to any products herein. Freescale makes no warranty, representation, or guarantee regarding the suitability of its products for any particular purpose, nor does Freescale assume any liability arising out of the application or use of any product or circuit, and specifically disclaims any and all liability, including without limitation consequential or incidental damages. “Typical” parameters that may be provided in Freescale data sheets and/or specifications can and do vary in different applications, and actual performance may vary over time. All operating parameters, including “typicals,” must be validated for each customer application by customer’s technical experts. Freescale does not convey any license under its patent rights nor the rights of others. Freescale sells products pursuant to standard terms and conditions of sale, which can be found at the following address: freescale.com/SalesTermsandConditions.

Freescale, the Freescale logo, and Kinetis are trademarks of Freescale Semiconductor, Inc., Reg. U.S. Pat. & Tm. Off. All other product or service names are the property of their respective owners.

ARM, the ARM logo, and Cortex are registered trademarks of ARM Limited (or its subsidiaries) in the EU and/or elsewhere. All rights reserved.

IEEE 802.15.4 is a registered trademark of the Institute of Electrical and Electronics Engineers, Inc. (IEEE). This product is not endorsed or approved by the IEEE. ZigBee Stack is a trademark of Integration Asssociates.

© 2016 Freescale Semiconductor, Inc.

Document Number: FRDMKW24DUG
Rev. 1
05/2016