Bothhand USA. **e-mail: sales@bothhandusa.com http://www.bothhandusa.com**

40 PIN SMD ETHERNET 10/100 BASE QUAD PORT TRANSFORMER

P/N: 40ST1041P DATA SHEET

Feature

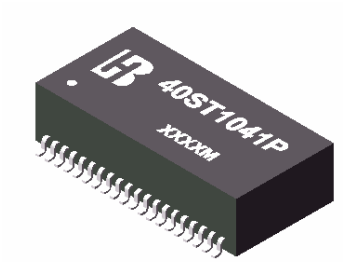

- IEEE 802.3 Ethernet compatible 100 BASE-TX.
- Surface mountable .
- Design for multiport repeater and Ethernet switching hub application .
- Customer designs available for specific application .
- Operating temperature range : -0℃ to +70℃.
- Storage temperature range: -25℃to +125℃.

Electrical Specifications @ 25°C

Part Number	Turns Ratio (±5%)		OCL(μH Min) @100KHz/0.1Vrms 8mA DC/Bias	L.L (μH Max)	$C_{W/W}$ (pF Max)	RiseTime (nS Typ)	HI-POT (Vrms)
	TX	RX					
40ST1041P	1CT:1CT	1:1	350	0.42	30	2.5	2000

Continue

Part Number	Insertion Loss (dB Max)	Return Loss (dB Min)			Cross talk (dB Min)		DCMR (dB Min)		
	0.3–100MHz	0.3-30MHz	30-60MHz	60-80MHz	0.3-60MHz	60-100MHz	60MHz	100MHz	200MHz
40ST1041P	-1.15	-16	-12	-10	-45	-35	-37	-28	-25

Schematic

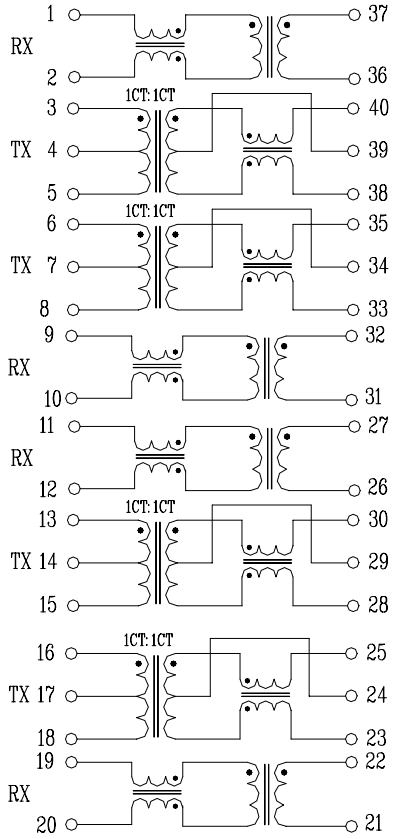

Mechanical

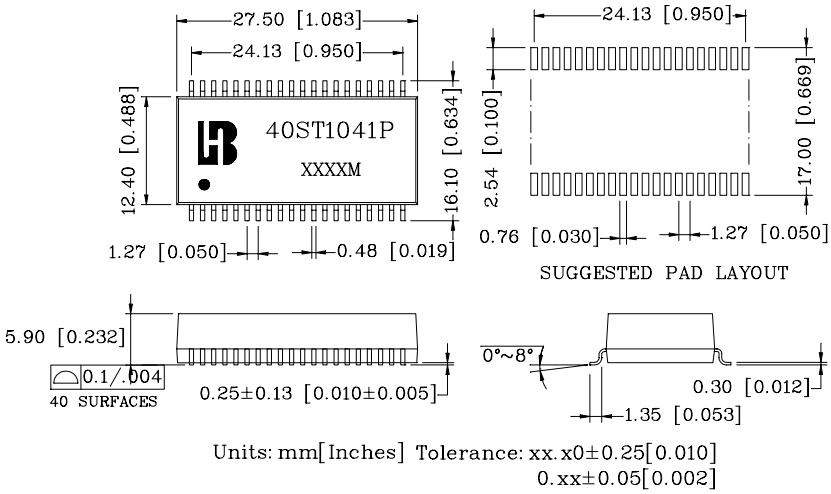

462 Boston St - Topsfield, MA 01983 - Phone: 978-887-8050 - Fax: 978-887-5434