LUMILEDS

AUTOMOTIVE

SnapLED

Functional solutions for robust rear combination lamp designs

SnapLED LEDs are a robust solution for customizable 2D and 3D clinch assemblies that allow efficient design solutions for rear lighting applications. The package utilizes Lumileds pioneering solderless clinch technology, designed specifically to meet the automotive industry's need for extreme reliability. SnapLED's proven design simplifies engineering complexity, increases styling flexibility and helps to minimize design cost.

FEATURES AND BENEFITS
Low stress and low gas permeability silicone encapsulant reduces delamination during solder reflow
Gold plated leadframe reduces risk of frame sulphur corrosion
Robust and reliable package with reduced risk of de-lamination at high temperatures
Fewer LEDs to meet functional requirements
AEC-Q101C qualified and PPAP documentation available

PRIMARY APPLICATIONS
Mirror/Side Repeater
Side Marker
Stop/Tail
- CHMSL
Turn

SnapLED Absolute Ratings.

PARAMETER	PERFORMANCE
Minimum DC Forward Current [1] [2]	5mA
Maximum DC Forward Current [1] [2]	75mA for SnapLED 75 150mA for SnapLED 150
Peak Pulsed Forward Current [1] [3]	300mA
Maximum Junction Temperature [1]	135°C
Operating Case Temperature [1]	-40 to 110°C
Storage Temperature	-40 to 115°C
Soldering Temperature	NA
Allowable Reflow Cycles	NA
ESD Sensitivity [2]	8kV Human Body Model (HBM) Class 3A per JEDEC JS-001-2012
Reverse Voltage (V_r)	(I_R = 100µA) 10V
High Temperature Chamber	125°C

Notes:
1. Proper current derating must be observed to maintain junction temperature below the maximum.
2. Residual periodic variations due to power conversion from alternating current (AC) to direct current (DC), also called "ripple", with frequencies ≥100Hz and amplitude ≤150mA are acceptable, assuming the average current throughout each cycle does not exceed the maximum allowable DC Forward Current at the corresponding maximum junction temperature.
3. Pulsed operation with a peak drive current equal to the stated Peak Pulsed Forward Current is acceptable if the pulse on-time is ≤5ms per cycle and the duty cycle is ≤50%.

Mechanical Dimensions.

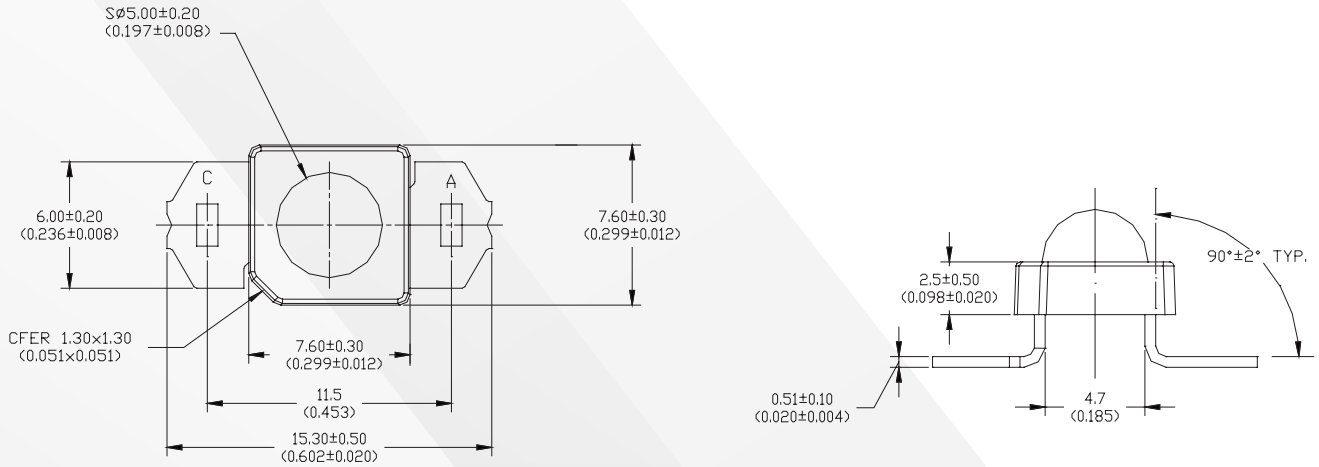

Notes:
1. Drawings are not scale.
2. All dimensions are in millimeters.

©2015 Lumileds Holding B.V. All rights reserved.
LUXEON is a registered trademark of the Lumileds Holding B.V. in the United States and other countries.

www.lumileds.com

Neither Lumileds Holding B.V. nor its affiliates shall be liable for any kind of loss of data or any other damages, direct, indirect or consequential, resulting from the use of the provided information and data. Although Lumileds Holding B.V. and/or its affiliates have attempted to provide the most accurate information and data, the materials and services information and data are provided "as is," and neither Lumileds Holding B.V. nor its affiliates warrants or guarantees the contents and correctness of the provided information and data. Lumileds Holding B.V. and its affiliates reserve the right to make changes without notice. You as user agree to this disclaimer and user agreement with the download or use of the provided materials, information and data.