HT7938A
High Current and Performance White LED Driver

Feature

- Efficiency up to 90% at V_{IN}=4.0V, 5S2P, I_{LED}=20mA
- 1.2MHz fixed switching frequency
- Low standby current: 0.1μA (typ.) at V_{EN}=0V
- Matches LED current
- Tiny inductor and capacitors
- EN pin dimming frequency up to 200kHz
- Up to 10 strings White-LED (LED $V_{F(Max.)}$=3.5V)
- Tiny 6-lead SOT23-6 package
- Built in OVP, OCP, OTP, UVLO protection

Applications

- Cellular phones
- PDAs
- DSCs
- Handheld devices
- White LED display backlighting

General Description

The HT7938A is high efficiency boost converter with constant current output for backlight applications in handheld devices. Using a series connection of LEDs provides constant identical LED currents resulting in uniform brightness. The continuous LED current is set using the device FB pin regulated voltage across an external sense resistor, R_{FB}, connected between this pin and ground. The integrated open load protection feature prevents device damage resulting from open circuit load conditions. A low 300mV feedback voltage minimises power losses in the current setting resistor which provides enhanced efficiency. The HT7938A has a dimming frequency of up to 200kHz, which has excellent linear performance over this dimming frequency range. The device switches at rates of up to 1.2MHz to allow the use of extremely small inductors and filter capacitors.

Selection Guide

Part No.	Package	Marking
HT7938A	SOT23-6	38A-3 (V_{FB}=300mV)

Note: Both lead free and green compound devices are available.

Block Diagram

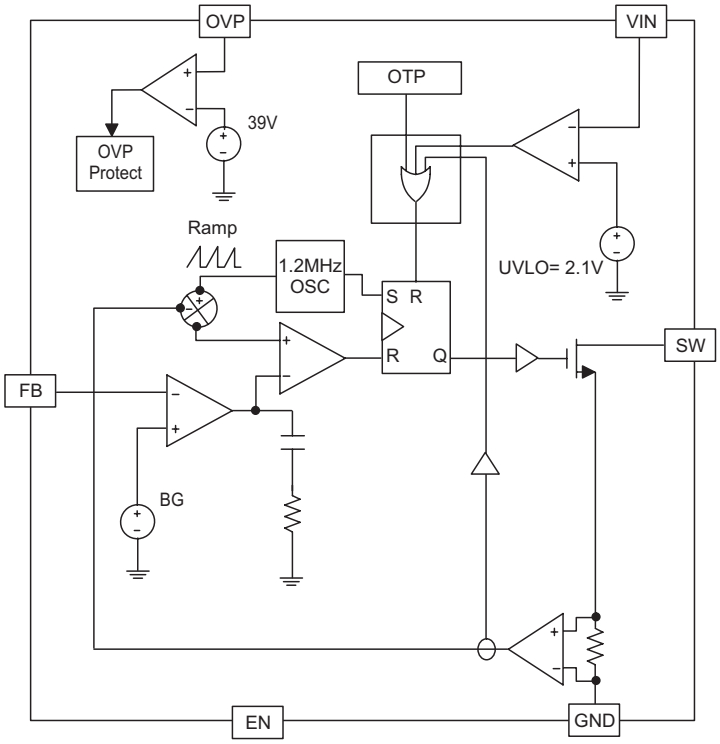

Pin Assignment

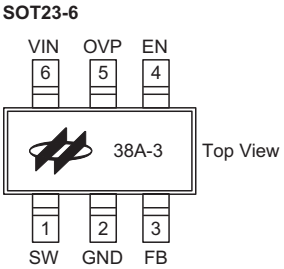

Pin Description

Pin Name	I/O	Desciption
SW	I	Switching pin. Internal power MOSFET drain. Connected to inductor and diode.
GND	—	Signal Ground.
FB	I	Feedback pin. Reference voltage. The HT7938A feedback voltage is 300mV. Connect the sense resistor from FB to GND to set the LED current. Calculate resistor value according to R_{FB}=300mV/I_{LED}.
EN	I	Shutdown & Dimming control input. Don't allow this pin to float. When dimming control input high to low level period more than 20ms and have no other dimming signal, the device is entered shutdown mode.
VOP	O	Over voltage protection pin which is connected to the output.
VIN	I	Input supply pin. The input supply pin for the IC. Connect VIN to a supply voltage between 2.6V~5.5V.

Absolute Maximum Ratings

Input Voltage 6.0V
SW Voltage 46V
FB Voltage 6.0V
EN 6.0V
OVP Voltage 46V
Operating Temperature Range ..... -40°C to +85°C
Storage Temperature Range ..... -55°C to +150°C
Maximum Junction Temperature ..... 150°C

Note: These are stress ratings only. Stresses exceeding the range specified under Absolute Maximum Ratings may cause substantial damage to the device. Functional operation of this device at other conditions beyond those listed in the specification is not implied and prolonged exposure to extreme conditions may affect device reliability.

Electrical Characteristics

V_{IN}= 3.6V, L=22μH, C_{IN}=1μF, C_{OUT}=4.7μF, I_{LED}=20mA, Ta=25°C, unless otherwise specified (Note 1)

Symbol	Parameter	Test Conditions	Min.	Typ.	Max.	Unit
Input Supply Voltage and Current						
V_{IN}	Input Voltage	—	2.6	—	5.5	V
UVLO	Under Voltage Lockout	—	1.8	2.1	2.4	V
I_{IN}	Supply Current	Switching	—	1.0	5.0	mA
		V_{EN}=0	—	0.1	1.0	μA
Error Amplifier						
V_{FB}	Feedback Voltage	For 38A-3 Marking	285	300	315	mV
V_{Line}	Line Regulation	V_{IN}=3.0~4.3V, I_{LED}=20mA	—	1.0	—	%
Power Switch						
f_{OSC}	Switching Frequency	Measured at SW Pin	0.8	1.2	1.6	MHz
DC	Maximum Duty Cycle		92	95	—	%
$R_{DS(ON)}$	SW ON Resistance	—	—	0.7	—	Ω
$I_{SW(OFF)}$	Switch Leakage Current	—	—	0.1	1.0	μA
Enable						
V_{IH}	EN Voltage High	—	2.0	—	—	V
V_{IL}	EN Voltage Low	—	—	—	0.8	V
f_{EN}	Dimming Clock Rate	Duty= 5%~100%	0.1	—	200	kHz
OVP and OCP						
V_{OVP}	OVP Threshold	No Load	36	39	42	V
I_{OCP}	N-channel MOSFET Current limit	—	—	1000	—	mA
Thermal Shutdown						
t_{SHUT}	Thermal Shutdown Threshold	—	—	150	—	°C
	Thermal Shutdown Hysteresis	—	—	25	—	°C

Note 1. Specifications are production tested at Ta=25 degree. Specifications over -40°C to 85°C degree operating temperature range are assured by design, characterization.

Function Description

VIN Under-Voltage Lockout -- UVLO

The device contains an Input Under Voltage Lockout (UVLO) circuit. The purpose of the UVLO circuit is to ensure that the input voltage is high enough for reliable operation. When the input voltage falls below the under voltage threshold, the internal FET switch is turned off. If the input voltage rises by the under voltage lockout hysteresis, the device will restart. The UVLO threshold is set below the minimum input voltage of 2.6V to avoid any transient VIN drops under the UVLO threshold and causing the converter to turn off.

Current Limit Protection

The device has a cycle-by-cycle current limit to protect the internal power MOSFET. If the inductor current reaches the current limit threshold, the MOSFET will be turned off. It is important to note that this current limit will not protect the output from excessive current during an output short circuit. If an output short circuit has occurred, excessive current can damage both the inductor and diode.

Over-Voltage Protection -- OVP

The device provides an over-voltage protection function. If the FB pin is shorted to ground or an LED is disconnected from the circuit, the FB pin voltage will fall to zero and the internal power MOSFET will switch with its full duty cycle. This may cause the output voltage to exceed its maximum voltage rating, possibly damaging the IC and external components. Internal over-voltage protection circuitry turns off the power MOSFET and shuts down the IC as soon as the output voltage exceeds the OVP threshold. As a result, the output voltage falls to the level of the input supply voltage. The device remains in shutdown mode until the power is restarted.

Over-Temperature Protection -- OTP

A thermal shutdown is implemented to prevent damages due to excessive heat and power dissipation. Typically the thermal shutdown threshold is 150°C. When the thermal shutdown is triggered the device stops switching until the temperature falls below typically 125°C. Then the device starts switching again.

Application Information

Inductor Selection

The selection of the inductor affects steady state operation as well as transient behavior and loop stability. There are three important electrical parameters which need to be considered when choosing an inductor: the value of inductor, DCR (copper wire resistance) and the saturation current.

Choose an inductor that can handle the necessary peak current without saturating, and ensure that the inductor has a low DCR to minimise power losses. A 10μH/22μH inductor should be a good choice for most HT7938A applications. However, a more exact inductance value can be calculated. A good rule for choosing an inductor value is to allow the peak-to-peak ripple current to be approximately 30~50% of the maximum input current. Calculate the required inductance value using the following equation:

$$L = \frac{V_{IN} \times (V_{OUT} - V_{IN})}{V_{OUT} \times F_{SW} \times \Delta I_L}$$

$$I_{IN(MAX)} = \frac{V_{OUT} \times I_{OUT(MAX)}}{V_{IN} \times \eta}$$

$$\Delta I_L = (30\% \sim 50\%) \times I_{IN(MAX)}$$

$$I_{L(PEAK)} = I_{IN(MAX)} + \frac{1}{2}\Delta I_L$$

In the equation above, $I_{OUT(MAX)}$ is the maximum load current, ΔI_L is the peak-to-peak inductor ripple current, η is the converter efficiency, F_{SW} is the converter frequency and $I_{L(PEAK)}$ is the peak inductor current.

Output Capacitor Selection

The output capacitor determines the steady state output voltage ripple. The voltage ripple is related to the capacitor's capacitance and its ESR (Equivalent Series Resistance). A ceramic capacitor with a low ESR value will provide the lowest voltage ripple and are therefore recommended. Due to its low ESR, the capacitance value can be calculated by the equation:

$$C_{out} = \frac{(V_O - V_{IN}) \times I_{OUT}}{V_{OUT} \times F_{SW} \times V_{ripple}}$$

In the equation above, V_{ripple} =peak to peak output ripple, F_{SW} is the switching frequency.

A 2.2μF~10μF ceramic capacitor is suitable for most application.

Input Capacitor Selection

An input capacitor is required to supply the ripple current to the inductor, while limiting noise at the input source. A low ESR ceramic capacitors is required to keep the noise at the IC to a minimum.

A 1μF~10μF ceramic capacitor is suitable for most application. This capacitor must be connected very close to the VIN pin and inductor, with short traces for good noise performance.

Schottky Diode Selection

The output rectifier diode conducts during the internal MOSFET is turn off. The average and peak current rating must be greater than the maximum output current and peak inductor current. The reverse breakdown voltage must be greater than the maximum output voltage. It is recommended to use a schottky diode with low forward voltage to minimize the power dissipation and therefore to maximize the efficiency of the converter. A 1N5819 type diode is recommended for HT7938A applications.

LED Current Selection

The LED current is controlled by the current sense feedback resistor R_{fb}, The current sense feedback reference voltage is 300mV. In order to have accurate LED currents, precision resistors are the preferred type with a 1% tolerance. The LED current can be calculated from the following formula.

$$I_{LED} = \frac{V_{FB}}{R_{FB}} = \frac{300mV}{R_{FB}}$$

Where I_{LED} is the total output LED current, V_{FB}=feedback voltage, R_{FB}=current sense resistor.

Digital and Analog Dimming Control

The LED illumination level can be controlled using both digital and analog methods.

The digital dimming method uses a PWM signal applied to the EN pin. This is shown in figure 14. When the PWM dimming frequency is lower than 200Hz, LED current is following by this PWM signal. And now the device output current is under digital mode dimming. It is under analog mode dimming, when the PWM dimming frequency is higher than 200Hz, the PWM signal is converted to a DC voltage by internal filter. And the LED current is a DC current proportional to PWM signal. A 0% duty cycle corresponds to zero LED current. A 100% duty cycle corresponds to a full LED current. It provides high dimming accuracy from duty 5% to 100%. To make sure this switching process between on and off state is invisible by human eyes; the switching frequency must be greater than 100Hz. HT7938A can be applied to the EN pin PWM dimming frequency up to 200kHz. As shown below, to adjust the analog mode average output current value following the equation:

$$I_{LED} = \frac{V_{FB}}{R_{FB}} \times \text{Duty cycle}$$

$$0 \le \text{Duty cycle} \le 1$$

There are two methods of analog LED brightness control. The first method uses a DC voltage to control the feedback voltage. If the DC voltage range is from 0V to 3.3V, the selection of resistors control the LED current from 20mA to 0mA. The other way is to use a filtered PWM signal, as shown in figure 16. The filtered PWM signal application acts in the same way as the DC voltage dimming control.

Layout Considerations

Circuit board layout is a very important consideration for switching regulators if they are to function properly. Poor circuit layout may result in related noise problems.

In order to minimize EMI and switching noise, please follow the guidelines below:

- All tracks should be as wide as possible.
- The input and output capacitors, C1 and C2, should be placed close to the VIN, VO and GND pins.
- The Schottky diode, D1, and inductor, L, must be placed close to the SW pin.
- Feedback resistor, R_{fb}, must be placed close to the FB and GND pins.
- A full ground plane is always helpful for better EMI performance.

A recommended PCB layout with component locations is shown below.

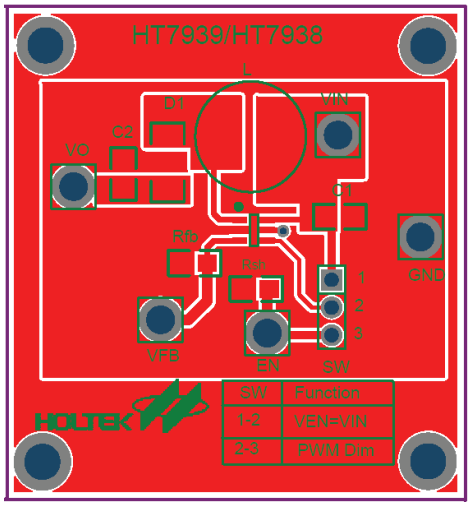

Top Layer

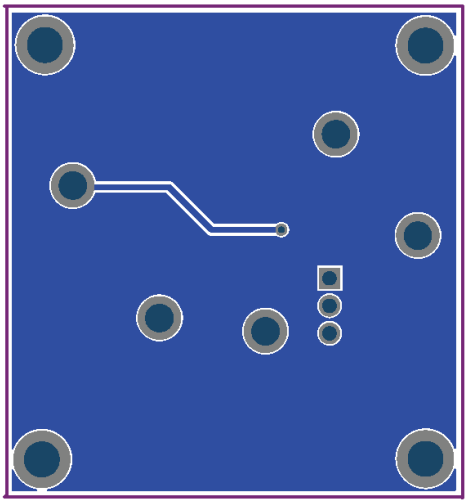

Bottom Layer

Typical Performance Characteristics

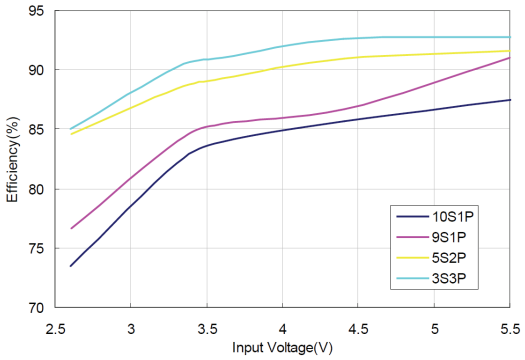

Fig.1 Efficiency VS Input Voltage (L=10μH)

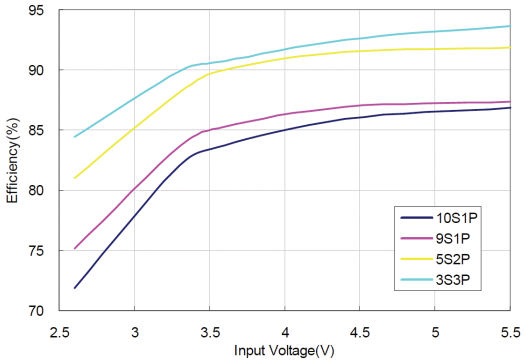

Fig.2 Efficiency VS Input Voltage (L=22μH)

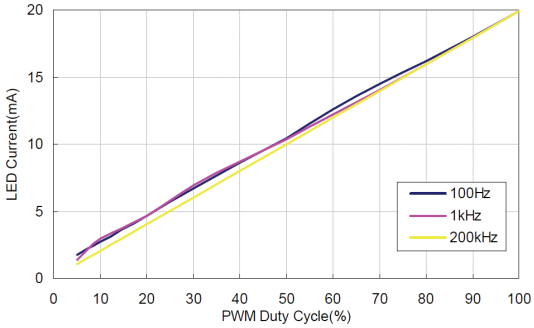

Fig.3 LED Current VS PWM Dimming(10S1P LEDs)

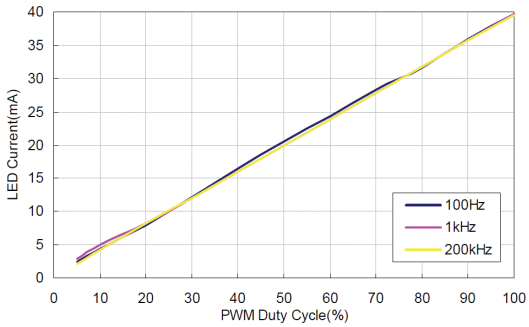

Fig.4 LED Current VS PWM Di

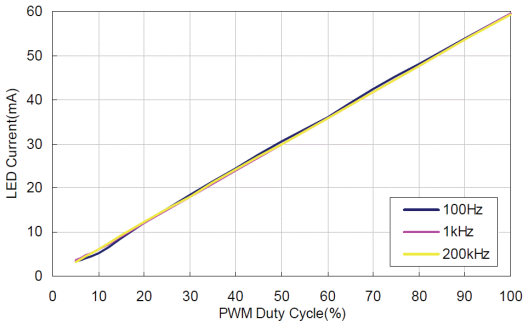

Fig.5 LED Current VS PWM Dimming (3S3P LEDs)

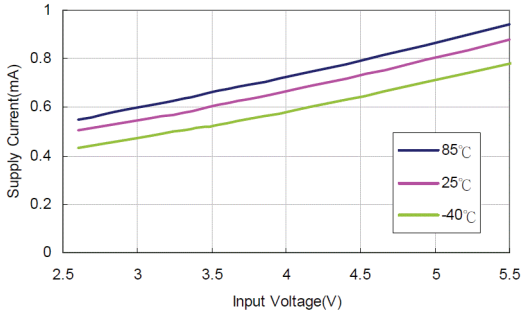

Fig.6 Supply Current VS Input Voltage

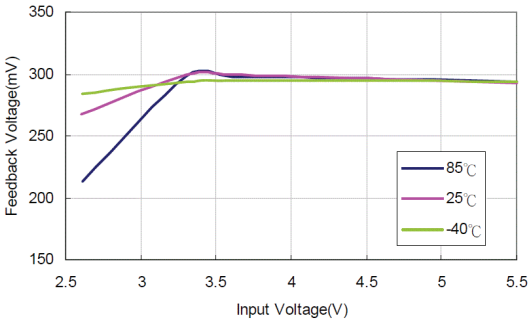

Fig.7 Feedback Voltage VS Input Voltage

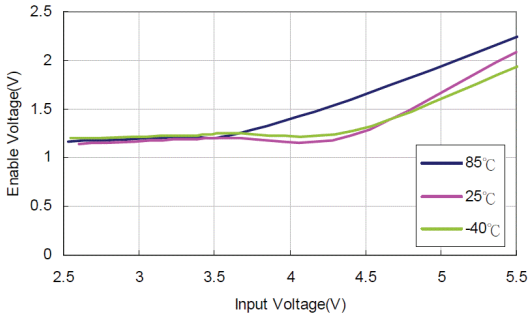

Fig.8 Enable Voltage VS Input Voltage

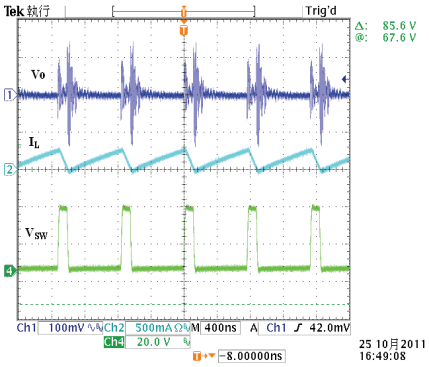

Fig.9 Switching Waveform(10S1P)

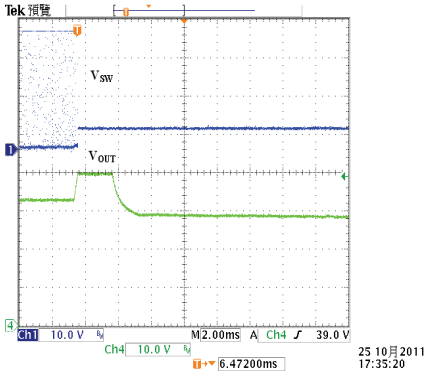

Fig.10 Open LED Protection

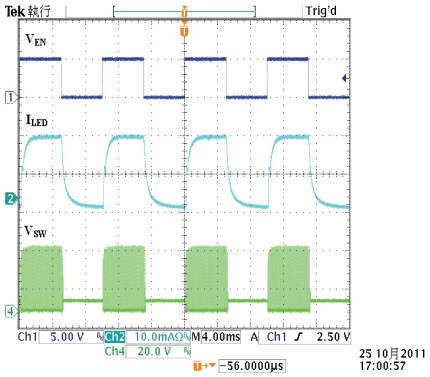

Fig.11 200Hz PWM Dimming Waveform

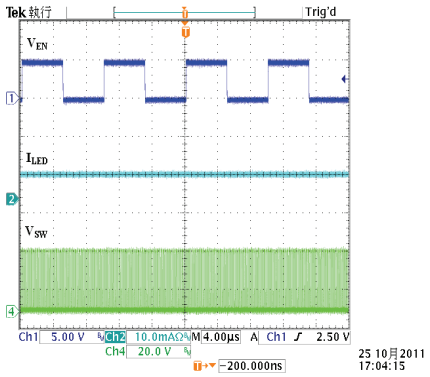

Fig.12 1kHz PWM Dimming Waveform

Application Circuits

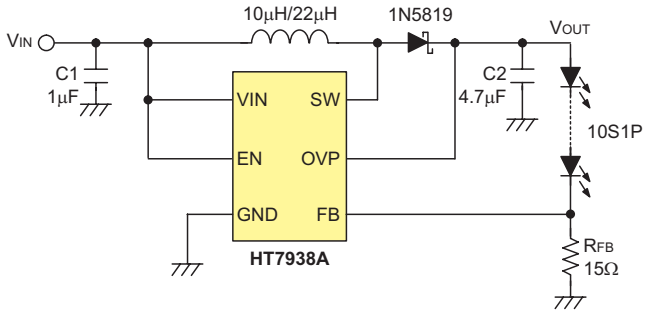

Fig.13 Application for Driving 10S1P WLEDs

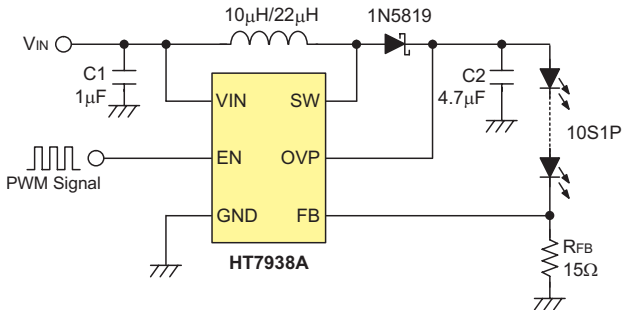

Fig.14 Application for Dimming Control Using A PWM Signal

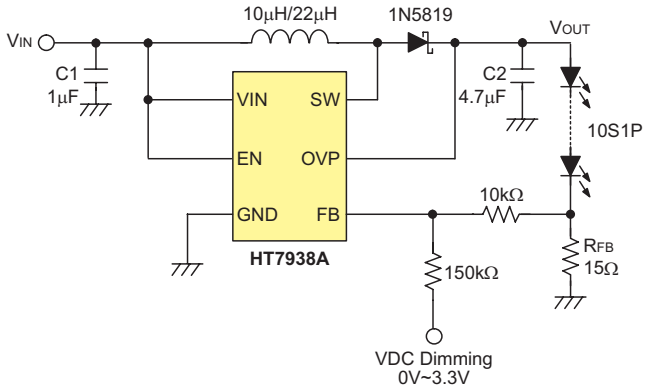

Fig.15 Application for Dimming Control Using a DC Voltage

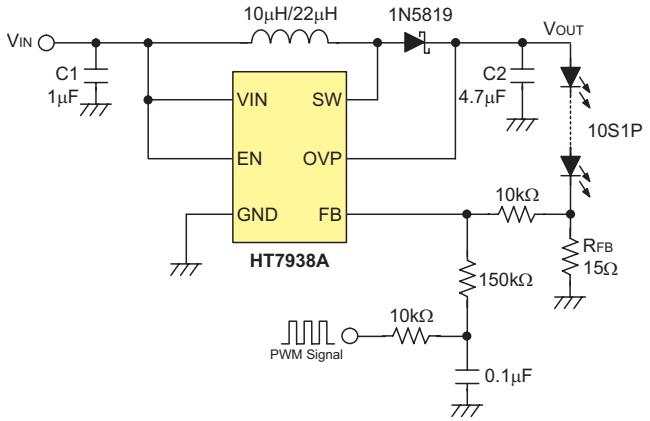

Fig.16 Application for Dimming Control Using a Filtered PWM Signal

Note: As the above application circuits are unable to show the full drive capabilities and series/parallel drive combinations of this device the following supplemental information is provided.

For the general full voltage range situation:

1. Vin Variable Voltage of 2.6V~5.5V
2. LED forward voltage of 3.5V max.

Maximum LED Drive Capability		
Series	**Parallel**	**Total**
3	3	9
4	2	8
5	2	10
6	1	6
7	1	7
8	1	8
9	1	9
10	1	10

It is also important to note that for an input voltage supply which can be maintained at 5.0V or higher, the device possesses even higher drive capabilities which can drive a higher number of parallel connected LEDs. The following table depicts the maximum LED numbers possible for this higher input voltage range.

1. Vin Variable Voltage of 5.0V~5.5V
2. LED forward voltage of 3.5V max.

Maximum LED Drive Capability		
Series	**Parallel**	**Total**
3	13	39
3	10	40
3	9	27
4	8	32
5	4	20
6	4	24
7	3	21
8	2	16
9	2	18
10	2	20

Package Information

Note that the package information provided here is for consultation purposes only. As this information may be updated at regular intervals users are reminded to consult the Holtek website for the latest version of the Package/Carton Information.

Additional supplementary information with regard to packaging is listed below. Click on the relevant section to be transferred to the relevant website page.

- Package Information (include Outline Dimensions, Product Tape and Reel Specifications)
- The Operation Instruction of Packing Materials
- Carton information

6-pin SOT23–6 Outline Dimensions

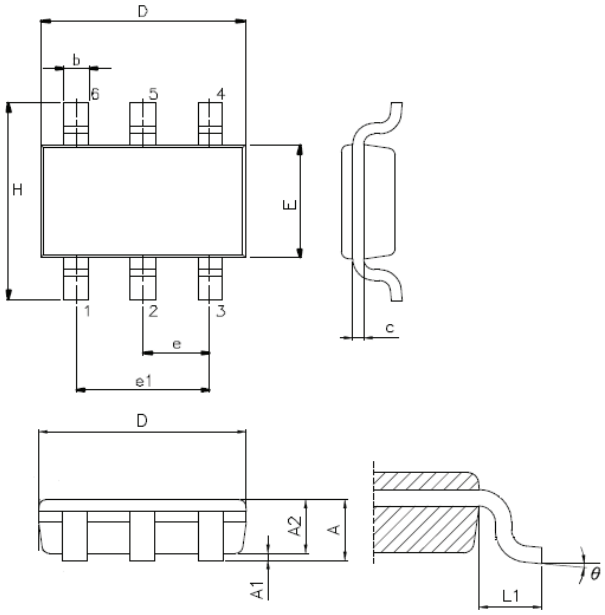

Symbol	Dimensions in inch		
	Min.	Nom.	Max.
A	—	—	0.057
A1	—	—	0.006
A2	0.035	0.045	0.051
b	0.012	—	0.020
C	0.003	—	0.009
D	—	0.114 BSC	—
E	—	0.063 BSC	—
e	—	0.037 BSC	—
e1	—	0.075 BSC	—
H	—	0.110 BSC	—
L1	—	0.024 BSC	—
θ	0°	—	8°

Symbol	Dimensions in mm		
	Min.	Nom.	Max.
A	—	—	1.45
A1	—	—	0.15
A2	0.90	1.15	1.30
b	0.30	—	0.50
C	0.08	—	0.22
D	—	2.90 BSC	—
E	—	1.60 BSC	—
e	—	0.95 BSC	—
e1	—	1.90 BSC	—
H	—	2.80 BSC	—
L1	—	0.60 BSC	—
θ	0°	—	8°

Copyright© 2016 by HOLTEK SEMICONDUCTOR INC.

The information appearing in this Data Sheet is believed to be accurate at the time of publication. However, Holtek assumes no responsibility arising from the use of the specifications described. The applications mentioned herein are used solely for the purpose of illustration and Holtek makes no warranty or representation that such applications will be suitable without further modification, nor recommends the use of its products for application that may present a risk to human life due to malfunction or otherwise. Holtek's products are not authorized for use as critical components in life support devices or systems. Holtek reserves the right to alter its products without prior notification. For the most up-to-date information, please visit our web site at http://www.holtek.com.