To our customers,

Old Company Name in Catalogs and Other Documents

On April 1st, 2010, NEC Electronics Corporation merged with Renesas Technology Corporation, and Renesas Electronics Corporation took over all the business of both companies. Therefore, although the old company name remains in this document, it is a valid Renesas Electronics document. We appreciate your understanding.

Renesas Electronics website: http://www.renesas.com

April 1st, 2010
Renesas Electronics Corporation

Issued by: Renesas Electronics Corporation (http://www.renesas.com)

Send any inquiries to http://www.renesas.com/inquiry.

RENESAS

Notice

1. All information included in this document is current as of the date this document is issued. Such information, however, is subject to change without any prior notice. Before purchasing or using any Renesas Electronics products listed herein, please confirm the latest product information with a Renesas Electronics sales office. Also, please pay regular and careful attention to additional and different information to be disclosed by Renesas Electronics such as that disclosed through our website.
2. Renesas Electronics does not assume any liability for infringement of patents, copyrights, or other intellectual property rights of third parties by or arising from the use of Renesas Electronics products or technical information described in this document. No license, express, implied or otherwise, is granted hereby under any patents, copyrights or other intellectual property rights of Renesas Electronics or others.
3. You should not alter, modify, copy, or otherwise misappropriate any Renesas Electronics product, whether in whole or in part.
4. Descriptions of circuits, software and other related information in this document are provided only to illustrate the operation of semiconductor products and application examples. You are fully responsible for the incorporation of these circuits, software, and information in the design of your equipment. Renesas Electronics assumes no responsibility for any losses incurred by you or third parties arising from the use of these circuits, software, or information.
5. When exporting the products or technology described in this document, you should comply with the applicable export control laws and regulations and follow the procedures required by such laws and regulations. You should not use Renesas Electronics products or the technology described in this document for any purpose relating to military applications or use by the military, including but not limited to the development of weapons of mass destruction. Renesas Electronics products and technology may not be used for or incorporated into any products or systems whose manufacture, use, or sale is prohibited under any applicable domestic or foreign laws or regulations.
6. Renesas Electronics has used reasonable care in preparing the information included in this document, but Renesas Electronics does not warrant that such information is error free. Renesas Electronics assumes no liability whatsoever for any damages incurred by you resulting from errors in or omissions from the information included herein.
7. Renesas Electronics products are classified according to the following three quality grades: "Standard", "High Quality", and "Specific". The recommended applications for each Renesas Electronics product depends on the product's quality grade, as indicated below. You must check the quality grade of each Renesas Electronics product before using it in a particular application. You may not use any Renesas Electronics product for any application categorized as "Specific" without the prior written consent of Renesas Electronics. Further, you may not use any Renesas Electronics product for any application for which it is not intended without the prior written consent of Renesas Electronics. Renesas Electronics shall not be in any way liable for any damages or losses incurred by you or third parties arising from the use of any Renesas Electronics product for an application categorized as "Specific" or for which the product is not intended where you have failed to obtain the prior written consent of Renesas Electronics. The quality grade of each Renesas Electronics product is "Standard" unless otherwise expressly specified in a Renesas Electronics data sheets or data books, etc.

   "Standard": Computers; office equipment; communications equipment; test and measurement equipment; audio and visual equipment; home electronic appliances; machine tools; personal electronic equipment; and industrial robots.

   "High Quality": Transportation equipment (automobiles, trains, ships, etc.); traffic control systems; anti-disaster systems; anti-crime systems; safety equipment; and medical equipment not specifically designed for life support.

   "Specific": Aircraft; aerospace equipment; submersible repeaters; nuclear reactor control systems; medical equipment or systems for life support (e.g. artificial life support devices or systems), surgical implantations, or healthcare intervention (e.g. excision, etc.), and any other applications or purposes that pose a direct threat to human life.
8. You should use the Renesas Electronics products described in this document within the range specified by Renesas Electronics, especially with respect to the maximum rating, operating supply voltage range, movement power voltage range, heat radiation characteristics, installation and other product characteristics. Renesas Electronics shall have no liability for malfunctions or damages arising out of the use of Renesas Electronics products beyond such specified ranges.
9. Although Renesas Electronics endeavors to improve the quality and reliability of its products, semiconductor products have specific characteristics such as the occurrence of failure at a certain rate and malfunctions under certain use conditions. Further, Renesas Electronics products are not subject to radiation resistance design. Please be sure to implement safety measures to guard them against the possibility of physical injury, and injury or damage caused by fire in the event of the failure of a Renesas Electronics product, such as safety design for hardware and software including but not limited to redundancy, fire control and malfunction prevention, appropriate treatment for aging degradation or any other appropriate measures. Because the evaluation of microcomputer software alone is very difficult, please evaluate the safety of the final products or system manufactured by you.
10. Please contact a Renesas Electronics sales office for details as to environmental matters such as the environmental compatibility of each Renesas Electronics product. Please use Renesas Electronics products in compliance with all applicable laws and regulations that regulate the inclusion or use of controlled substances, including without limitation, the EU RoHS Directive. Renesas Electronics assumes no liability for damages or losses occurring as a result of your noncompliance with applicable laws and regulations.
11. This document may not be reproduced or duplicated, in any form, in whole or in part, without prior written consent of Renesas Electronics.
12. Please contact a Renesas Electronics sales office if you have any questions regarding the information contained in this document or Renesas Electronics products, or if you have any other inquiries.

(Note 1) "Renesas Electronics" as used in this document means Renesas Electronics Corporation and also includes its majority-owned subsidiaries.

(Note 2) "Renesas Electronics product(s)" means any product developed or manufactured by or for Renesas Electronics.

User's Manual

8

The revision list can be viewed directly by clicking the title page.
The revision list summarizes the locations of revisions and additions.
Details should always be checked by referring to the relevant text.

H8/38024, H8/38024S, H8/38024R, H8/38124 Group

Hardware Manual
Renesas 8-Bit Single-Chip Microcomputer
H8 Family/H8/300L Super Low Power Series

H8/38024 Group	H8/38024	H8/38024R Group	H8/38024R
	H8/38023		
	H8/38022	H8/38124 Group	H8/38124
	H8/38021		H8/38123
	H8/38020		H8/38122
H8/38024S Group	H8/38024S		H8/38121
	H8/38022S		H8/38120
	H8/38021S		
	H8/38020S		
	H8/38000S		

Renesas Electronics
www.renesas.com

Rev.8.00 2010.03

Notes regarding these materials

1. This document is provided for reference purposes only so that Renesas customers may select the appropriate Renesas products for their use. Renesas neither makes warranties or representations with respect to the accuracy or completeness of the information contained in this document nor grants any license to any intellectual property rights or any other rights of Renesas or any third party with respect to the information in this document.
2. Renesas shall have no liability for damages or infringement of any intellectual property or other rights arising out of the use of any information in this document, including, but not limited to, product data, diagrams, charts, programs, algorithms, and application circuit examples.
3. You should not use the products or the technology described in this document for the purpose of military applications such as the development of weapons of mass destruction or for the purpose of any other military use. When exporting the products or technology described herein, you should follow the applicable export control laws and regulations, and procedures required by such laws and regulations.
4. All information included in this document such as product data, diagrams, charts, programs, algorithms, and application circuit examples, is current as of the date this document is issued. Such information, however, is subject to change without any prior notice. Before purchasing or using any Renesas products listed in this document, please confirm the latest product information with a Renesas sales office. Also, please pay regular and careful attention to additional and different information to be disclosed by Renesas such as that disclosed through our website. (http://www.renesas.com)
5. Renesas has used reasonable care in compiling the information included in this document, but Renesas assumes no liability whatsoever for any damages incurred as a result of errors or omissions in the information included in this document.
6. When using or otherwise relying on the information in this document, you should evaluate the information in light of the total system before deciding about the applicability of such information to the intended application. Renesas makes no representations, warranties or guaranties regarding the suitability of its products for any particular application and specifically disclaims any liability arising out of the application and use of the information in this document or Renesas products.
7. With the exception of products specified by Renesas as suitable for automobile applications, Renesas products are not designed, manufactured or tested for applications or otherwise in systems the failure or malfunction of which may cause a direct threat to human life or create a risk of human injury or which require especially high quality and reliability such as safety systems, or equipment or systems for transportation and traffic, healthcare, combustion control, aerospace and aeronautics, nuclear power, or undersea communication transmission. If you are considering the use of our products for such purposes, please contact a Renesas sales office beforehand. Renesas shall have no liability for damages arising out of the uses set forth above.
8. Notwithstanding the preceding paragraph, you should not use Renesas products for the purposes listed below:
   (1) artificial life support devices or systems
   (2) surgical implantations
   (3) healthcare intervention (e.g., excision, administration of medication, etc.)
   (4) any other purposes that pose a direct threat to human life
   Renesas shall have no liability for damages arising out of the uses set forth in the above and purchasers who elect to use Renesas products in any of the foregoing applications shall indemnify and hold harmless Renesas Technology Corp., its affiliated companies and their officers, directors, and employees against any and all damages arising out of such applications.
9. You should use the products described herein within the range specified by Renesas, especially with respect to the maximum rating, operating supply voltage range, movement power voltage range, heat radiation characteristics, installation and other product characteristics. Renesas shall have no liability for malfunctions or damages arising out of the use of Renesas products beyond such specified ranges.
10. Although Renesas endeavors to improve the quality and reliability of its products, IC products have specific characteristics such as the occurrence of failure at a certain rate and malfunctions under certain use conditions. Please be sure to implement safety measures to guard against the possibility of physical injury, and injury or damage caused by fire in the event of the failure of a Renesas product, such as safety design for hardware and software including but not limited to redundancy, fire control and malfunction prevention, appropriate treatment for aging degradation or any other applicable measures. Among others, since the evaluation of microcomputer software alone is very difficult, please evaluate the safety of the final products or system manufactured by you.
11. In case Renesas products listed in this document are detached from the products to which the Renesas products are attached or affixed, the risk of accident such as swallowing by infants and small children is very high. You should implement safety measures so that Renesas products may not be easily detached from your products. Renesas shall have no liability for damages arising out of such detachment.
12. This document may not be reproduced or duplicated, in any form, in whole or in part, without prior written approval from Renesas.
13. Please contact a Renesas sales office if you have any questions regarding the information contained in this document, Renesas semiconductor products, or if you have any other inquiries.

General Precautions in the Handling of MPU/MCU Products

The following usage notes are applicable to all MPU/MCU products from Renesas. For detailed usage notes on the products covered by this manual, refer to the relevant sections of the manual. If the descriptions under General Precautions in the Handling of MPU/MCU Products and in the body of the manual differ from each other, the description in the body of the manual takes precedence.

1. Handling of Unused Pins

   Handle unused pins in accord with the directions given under Handling of Unused Pins in the manual.

   — The input pins of CMOS products are generally in the high-impedance state. In operation with an unused pin in the open-circuit state, extra electromagnetic noise is induced in the vicinity of LSI, an associated shoot-through current flows internally, and malfunctions may occur due to the false recognition of the pin state as an input signal. Unused pins should be handled as described under Handling of Unused Pins in the manual.

2. Processing at Power-on

   The state of the product is undefined at the moment when power is supplied.

   — The states of internal circuits in the LSI are indeterminate and the states of register settings and pins are undefined at the moment when power is supplied.

     In a finished product where the reset signal is applied to the external reset pin, the states of pins are not guaranteed from the moment when power is supplied until the reset process is completed.

     In a similar way, the states of pins in a product that is reset by an on-chip power-on reset function are not guaranteed from the moment when power is supplied until the power reaches the level at which resetting has been specified.

3. Prohibition of Access to Reserved Addresses

   Access to reserved addresses is prohibited.

   — The reserved addresses are provided for the possible future expansion of functions. Do not access these addresses; the correct operation of LSI is not guaranteed if they are accessed.

4. Clock Signals

   After applying a reset, only release the reset line after the operating clock signal has become stable. When switching the clock signal during program execution, wait until the target clock signal has stabilized.

   — When the clock signal is generated with an external resonator (or from an external oscillator) during a reset, ensure that the reset line is only released after full stabilization of the clock signal. Moreover, when switching to a clock signal produced with an external resonator (or by an external oscillator) while program execution is in progress, wait until the target clock signal is stable.

5. Differences between Products

   Before changing from one product to another, i.e. to one with a different type number, confirm that the change will not lead to problems.

   — The characteristics of MPU/MCU in the same group but having different type numbers may differ because of the differences in internal memory capacity and layout pattern. When changing to products of different type numbers, implement a system-evaluation test for each of the products.

Configuration of This Manual

This manual comprises the following items:

1. General Precautions in the Handling of MPU/MCU Products
2. Configuration of This Manual
3. Preface
4. Contents
5. Overview
6. Description of Functional Modules
   - CPU and System-Control Modules
   - On-Chip Peripheral Modules

   The configuration of the functional description of each module differs according to the module. However, the generic style includes the following items:

   i) Feature
   ii) Input/Output Pin
   iii) Register Description
   iv) Operation
   v) Usage Note

When designing an application system that includes this LSI, take notes into account. Each section includes notes in relation to the descriptions given, and usage notes are given, as required, as the final part of each section.

7. List of Registers
8. Electrical Characteristics
9. Appendix
   - Product Codes, Package Dimensions, etc.
10. Main Revisions for This Edition (only for revised versions)

The list of revisions is a summary of points that have been revised or added to earlier versions. This does not include all of the revised contents. For details, see the actual locations in this manual.

Preface

The H8/38024 Group is a single-chip microcomputer built around the high-speed H8/300L CPU and equipped with peripheral system functions on-chip. The H8/38024 Group incorporates peripheral functions including ROM, RAM, timer, serial communications interface (SCI), 10-bit PWM, A/D converter, LCD controller/driver, and I/O ports. It is a microcomputer allowing the implementation of a sophisticated control system. Versions are available with types of internal ROM: flash memory (F-ZTAT™*1) and PROM (ZTAT™*2). This makes it possible to design application products with a great deal of specification fluidity, and allows for rapid and flexible response to contingencies arising between the initial stages of production and full-scale production.

Below is a table listing the product specifications for each group.

Notes: 1. F-ZTAT is a trademark of Renesas Technology Corp.
2. ZTAT is a trademark of Renesas Technology Corp.

Specifications

Item		H8/38024 Group			H8/38024R Group	H8/38024S Group	H8/38124 Group	
		ZTAT	Mask	Flash	Flash	Mask	Flash	Mask
Memory	ROM	32 Kbytes	8 Kbytes to 32 Kbytes	32 Kbytes	32 Kbytes	8 Kbytes to 32 Kbytes	16 Kbytes/ 32 Kbytes	8 Kbytes to 32 Kbytes
	RAM	1 Kbyte	512 bytes or 1 Kbyte	1 Kbyte	1 Kbyte	512 bytes or 1 Kbyte	1 Kbyte	512 bytes or 1 Kbyte
Operating voltage and operating frequency	4.5 to 5.5 V	16 MHz	16 MHz	—	—	—	20 MHz	20 MHz
	2.7 to 5.5 V	10 MHz	10 MHz	—	—	—	20 MHz	20 MHz
	1.8 to 5.5 V	4 MHz	4 MHz	—	—	—	—	—
	2.7 to 3.6 V	—	—	10 MHz	10 MHz	10 MHz	—	—
	1.8 to 3.6 V	—	—	—	—	4 MHz	—	—
I/O ports	Input only	9	9	9	9	9	9	9
	Output only	6	6	6	6	6	6	6
	I/O	51	51	51	51	51	50	50
Timers	Clock (timer A)	1	1	1	1	1	1	1
	Reload (timer C)	1	1	1	1	1	1	1
	Compare (timer F)	1	1	1	1	1	1	1
	Capture (timer G)	1	1	1	1	1	1	1
	AEC	1	1	1	1	1	1	1
	WDT	1	1	1	1	1		
	WDT (discrete)						1	1
SCI	UART/Synchronous	1	1	1	1	1	1	1
A-D (resolution × input channels)		10 × 8	10 × 8	10 × 8	10 × 8	10 × 8	10 × 8	10 × 8
LCD	seg	32	32	32	32	32	32	32
	com	4	4	4	4	4	4	4
External interrupt (internal wakeup)		13(8)	13(8)	13(8)	13(8)	13(8)	13(8)	13(8)
POR (power-on reset)		—	—	—	—	—	1	1
LVD (low-voltage detection circuit)		—	—	—	—	—	1	1
Package		FP-80A	FP-80A	FP-80A	FP-80A	FP-80A	FP-80A	FP-80A
		FP-80B	FP-80B	FP-80B	FP-80B			
		TFP-80C	TFP-80C	TFP-80C	TFP-80C	TFP-80C	TFP-80C	TFP-80C
				TLP85V	TLP85V	TLP85V		
			Chip	Chip	Chip	Chip		
Operating temperature		Standard specifications: –20 to 75°C, WTR: –40 to 85°C						

Please use R version.

Target Readers: This manual is designed for use by people who design application systems using the H8/38024 Group, H8/38024S Group, H8/38024R Group, and H8/38124 Group.
To use this manual, basic knowledge of electric circuits, logic circuits and microcomputers is required.

Purpose: This manual provides the information of the hardware functions and electrical characteristics of the H8/38024 Group, H8/38024S Group, H8/38024R Group, and H8/38124 Group. The H8/300L Series Software Manual contains detailed information of executable instructions. Please read the Software Manual together with this manual.

How to Use the Book:

- To understand general functions
  → Read the manual from the beginning.
  The manual explains the CPU, system control functions, peripheral functions and electrical characteristics in that order.
- To understanding CPU functions
  → Refer to the separate H8/300L Series Software Manual.

Explanatory Note: Bit sequence: upper bit at left, and lower bit at right

List of Related Documents: The latest documents are available on our Web site. Please make sure that you have the latest version.
(http://www.renesas.com/)

- User Manual for H8/38024 Group, H8/38024S Group, H8/38024R Group, and H8/38124 Group

Name of Document	Document No.
H8/38024 Group, H8/38024S Group, H8/38024R Group, H8/38124 Group Hardware Manual	This manual
H8/300L Series Software Manual	REJ09B0214

- User's Manual for Development Tools

Name of Document	Document No.
H8S, H8/300 Series, C/C++ Compiler, Assembler, Optimizing Linkage Editor User's Manual	REJ10B2039
H8S, H8/300 Series Simulator/Debugger User's Manual	REJ10B0211
High-Performance Embedded Workshop User's Manual	REJ10J2037

- Application Note

Name of Document	Document No.
H8S, H8/300 Series C/C++ Compiler Package Application Note	REJ05B0464

Notes: The following limitations apply to H8/38024, H8/38024R, and H8/38124 programming and debugging when the on-chip emulator is used.

1. Pin 95 is not available because it is used exclusively by the on-chip emulator.
2. Pins 33, 34, and 35 are unavailable for use. In order to use these pins additional hardware must be mounted on the user board.
3. The address range H'7000 to H'7FFF is used by the on-chip emulator and is unavailable to the user.
4. The address range H'F780 to H'FB7F must not be accessed under any circumstances.
5. When the on-chip emulator is being used, pin 95 is I/O, pins 33 and 34 are input, and pin 35 is output.
6. When using the on-chip emulator, pins OSC1 and OSC2 should be connected to an oscillator, or an external clock should be supplied to pin OSC1, even if the on-chip oscillator of the H8/38124 Group is selected.

All trademarks and registered trademarks are the property of their respective owners.

Contents

Section 1 Overview 1
1.1 Overview 1
1.2 Internal Block Diagram 7
1.3 Pin Arrangement and Functions 9
1.3.1 Pin Arrangement 9
1.3.2 Pin Functions 19

Section 2 CPU 25
2.1 Overview 25
2.1.1 Features 25
2.1.2 Address Space 26
2.1.3 Register Configuration 26
2.2 Register Descriptions 27
2.2.1 General Registers 27
2.2.2 Control Registers 27
2.2.3 Initial Register Values 29
2.3 Data Formats 29
2.3.1 Data Formats in General Registers 30
2.3.2 Memory Data Formats 31
2.4 Addressing Modes 32
2.4.1 Addressing Modes 32
2.4.2 Effective Address Calculation 34
2.5 Instruction Set 38
2.5.1 Data Transfer Instructions 40
2.5.2 Arithmetic Operations 42
2.5.3 Logic Operations 43
2.5.4 Shift Operations 44
2.5.5 Bit Manipulations 46
2.5.6 Branching Instructions 50
2.5.7 System Control Instructions 52
2.5.8 Block Data Transfer Instruction 53
2.6 Basic Operational Timing 55
2.6.1 Access to On-Chip Memory (RAM, ROM) 55
2.6.2 Access to On-Chip Peripheral Modules 56
2.7 CPU States 57
2.7.1 Overview 57
2.7.2 Program Execution State 59

2.7.3 Program Halt State 59
2.7.4 Exception-Handling State 59
2.8 Memory Map 60
2.8.1 Memory Map 60
2.9 Application Notes 66
2.9.1 Notes on Data Access 66
2.9.2 Notes on Bit Manipulation 68
2.9.3 Notes on Use of the EEPMOV Instruction 74

Section 3 Exception Handling 75
3.1 Overview 75
3.2 Reset 75
3.2.1 Overview 75
3.2.2 Reset Sequence 75
3.2.3 Interrupt Immediately after Reset 76
3.3 Interrupts 77
3.3.1 Overview 77
3.3.2 Interrupt Control Registers 79
3.3.3 External Interrupts 90
3.3.4 Internal Interrupts 91
3.3.5 Interrupt Operations 92
3.3.6 Interrupt Response Time 97
3.4 Application Notes 98
3.4.1 Notes on Stack Area Use 98
3.4.2 Notes on Rewriting Port Mode Registers 99
3.4.3 Method for Clearing Interrupt Request Flags 101

Section 4 Clock Pulse Generators 103
4.1 Overview 103
4.1.1 Block Diagram 103
4.1.2 System Clock and Subclock 104
4.1.3 Register Descriptions 105
4.2 System Clock Generator 106
4.3 Subclock Generator 111
4.4 Prescalers 113
4.5 Note on Oscillators 115
4.5.1 Definition of Oscillation Stabilization Wait Time 116
4.5.2 Notes on Use of Crystal Oscillator Element (Excluding Ceramic Oscillator Element) 118
4.5.3 Note on Use of HD64F38024 119

4.6 Notes on H8/38124 Group 119

Section 5 Power-Down Modes 121
5.1 Overview 121
5.1.1 System Control Registers 124
5.2 Sleep Mode 128
5.2.1 Transition to Sleep Mode 128
5.2.2 Clearing Sleep Mode 129
5.2.3 Clock Frequency in Sleep (Medium-Speed) Mode 129
5.3 Standby Mode 130
5.3.1 Transition to Standby Mode 130
5.3.2 Clearing Standby Mode 130
5.3.3 Oscillator Stabilization Time after Standby Mode Is Cleared 130
5.3.4 Standby Mode Transition and Pin States 132
5.3.5 Notes on External Input Signal Changes before/after Standby Mode 133
5.4 Watch Mode 134
5.4.1 Transition to Watch Mode 134
5.4.2 Clearing Watch Mode 135
5.4.3 Oscillator StabilizationTime after Watch Mode Is Cleared 135
5.4.4 Notes on External Input Signal Changes before/after Watch Mode 135
5.5 Subsleep Mode 136
5.5.1 Transition to Subsleep Mode 136
5.5.2 Clearing Subsleep Mode 136
5.6 Subactive Mode 137
5.6.1 Transition to Subactive Mode 137
5.6.2 Clearing Subactive Mode 137
5.6.3 Operating Frequency in Subactive Mode 137
5.7 Active (Medium-Speed) Mode 138
5.7.1 Transition to Active (Medium-Speed) Mode 138
5.7.2 Clearing Active (Medium-Speed) Mode 138
5.7.3 Operating Frequency in Active (Medium-Speed) Mode 138
5.8 Direct Transfer 139
5.8.1 Overview of Direct Transfer 139
5.8.2 Direct Transition Times 140
5.8.3 Notes on External Input Signal Changes before/after Direct Transition 142
5.9 Module Standby Mode 143
5.9.1 Setting Module Standby Mode 143
5.9.2 Clearing Module Standby Mode 143
5.10 Usage Note 144
5.10.1 Contention Between Module Standby and Interrupts 144

Section 6 ROM 145
6.1 Overview 145
6.1.1 Block Diagram 145
6.2 H8/38024 PROM Mode 146
6.2.1 Setting to PROM Mode 146
6.2.2 Socket Adapter Pin Arrangement and Memory Map 146
6.3 H8/38024 Programming 149
6.3.1 Writing and Verifying 149
6.3.2 Programming Precautions 154
6.4 Reliability of Programmed Data 155
6.5 Flash Memory Overview 156
6.5.1 Features 156
6.5.2 Block Diagram 157
6.5.3 Block Configuration 158
6.5.4 Register Configuration 160
6.6 Descriptions of Registers of the Flash Memory 160
6.6.1 Flash Memory Control Register 1 (FLMCR1) 160
6.6.2 Flash Memory Control Register 2 (FLMCR2) 163
6.6.3 Erase Block Register (EBR) 164
6.6.4 Flash Memory Power Control Register (FLPWCR) 164
6.6.5 Flash Memory Enable Register (FENR) 165
6.7 On-Board Programming Modes 166
6.7.1 Boot Mode 166
6.7.2 Programming/Erasing in User Program Mode 169
6.7.3 Notes on On-Board Programming 170
6.8 Flash Memory Programming/Erasing 170
6.8.1 Program/Program-Verify 170
6.8.2 Erase/Erase-Verify 174
6.8.3 Interrupt Handling when Programming/Erasing Flash Memory 174
6.9 Program/Erase Protection 176
6.9.1 Hardware Protection 176
6.9.2 Software Protection 176
6.9.3 Error Protection 177
6.10 Programmer Mode 177
6.10.1 Socket Adapter 177
6.10.2 Programmer Mode Commands 178
6.10.3 Memory Read Mode 181
6.10.4 Auto-Program Mode 184
6.10.5 Auto-Erase Mode 186
6.10.6 Status Read Mode 187

6.10.7 Status Polling 189
6.10.8 Programmer Mode Transition Time 190
6.10.9 Notes on Memory Programming 190
6.11 Power-Down States for Flash Memory 191

Section 7 RAM 193
7.1 Overview 193
7.1.1 Block Diagram 193

Section 8 I/O Ports 195
8.1 Overview 195
8.2 Port 1 197
8.2.1 Overview 197
8.2.2 Register Configuration and Description 197
8.2.3 Pin Functions 202
8.2.4 Pin States 203
8.2.5 MOS Input Pull-Up 203
8.3 Port 3 204
8.3.1 Overview 204
8.3.2 Register Configuration and Description 204
8.3.3 Pin Functions 209
8.3.4 Pin States 210
8.3.5 MOS Input Pull-Up 210
8.4 Port 4 211
8.4.1 Overview 211
8.4.2 Register Configuration and Description 211
8.4.3 Pin Functions 213
8.4.4 Pin States 214
8.5 Port 5 215
8.5.1 Overview 215
8.5.2 Register Configuration and Description 215
8.5.3 Pin Functions 218
8.5.4 Pin States 219
8.5.5 MOS Input Pull-Up 219
8.6 Port 6 220
8.6.1 Overview 220
8.6.2 Register Configuration and Description 220
8.6.3 Pin Functions 222
8.6.4 Pin States 223
8.6.5 MOS Input Pull-Up 223

8.7 Port 7 224
8.7.1 Overview 224
8.7.2 Register Configuration and Description 224
8.7.3 Pin Functions 226
8.7.4 Pin States 226
8.8 Port 8 227
8.8.1 Overview 227
8.8.2 Register Configuration and Description 227
8.8.3 Pin Functions 229
8.8.4 Pin States 229
8.9 Port 9 230
8.9.1 Overview 230
8.9.2 Register Configuration and Description 231
8.9.3 Pin Functions 234
8.9.4 Pin States 234
8.10 Port A 235
8.10.1 Overview 235
8.10.2 Register Configuration and Description 235
8.10.3 Pin Functions 237
8.10.4 Pin States 238
8.11 Port B 239
8.11.1 Overview 239
8.11.2 Register Configuration and Description 239
8.11.3 Pin Functions 241
8.12 Input/Output Data Inversion Function 242
8.12.1 Overview 242
8.12.2 Register Configuration and Descriptions 243
8.12.3 Note on Modification of Serial Port Control Register 244
8.13 Application Note 245
8.13.1 The Management of the Un-Use Terminal 245

Section 9 Timers 247
9.1 Overview 247
9.2 Timer A 248
9.2.1 Overview 248
9.2.2 Register Descriptions 250
9.2.3 Timer Operation 253
9.2.4 Timer A Operation States 254
9.2.5 Application Note 254
9.3 Timer C 255

9.3.1 Overview 255
9.3.2 Register Descriptions 257
9.3.3 Timer Operation 260
9.3.4 Timer C Operation States 262
9.4 Timer F 263
9.4.1 Overview 263
9.4.2 Register Descriptions 266
9.4.3 CPU Interface 273
9.4.4 Operation 276
9.4.5 Application Notes 279
9.5 Timer G 283
9.5.1 Overview 283
9.5.2 Register Descriptions 285
9.5.3 Noise Canceler 290
9.5.4 Operation 292
9.5.5 Application Notes 297
9.5.6 Timer G Application Example 301
9.6 Watchdog Timer 302
9.6.1 Overview 302
9.6.2 Register Descriptions 305
9.6.3 Timer Operation 311
9.6.4 Watchdog Timer Operation States 312
9.7 Asynchronous Event Counter (AEC) 313
9.7.1 Overview 313
9.7.2 Register Configurations 316
9.7.3 Operation 325
9.7.4 Asynchronous Event Counter Operation Modes 330
9.7.5 Application Notes 330

Section 10 Serial Communication Interface 333
10.1 Overview 333
10.1.1 Features 333
10.1.2 Block Diagram 335
10.1.3 Pin Configuration 336
10.1.4 Register Configuration 336
10.2 Register Descriptions 337
10.2.1 Receive Shift Register (RSR) 337
10.2.2 Receive Data Register (RDR) 337
10.2.3 Transmit Shift Register (TSR) 338
10.2.4 Transmit Data Register (TDR) 338

10.2.5 Serial Mode Register (SMR) 339
10.2.6 Serial Control Register 3 (SCR3) 342
10.2.7 Serial Status Register (SSR) 346
10.2.8 Bit Rate Register (BRR) 350
10.2.9 Clock stop register 1 (CKSTPR1) 356
10.2.10 Serial Port Control Register (SPCR) 356
10.3 Operation 358
10.3.1 Overview 358
10.3.2 Operation in Asynchronous Mode 362
10.3.3 Operation in Synchronous Mode 371
10.4 Interrupts 379
10.5 Application Notes 380

Section 11 10-Bit PWM 385
11.1 Overview 385
11.1.1 Features 385
11.1.2 Block Diagram 386
11.1.3 Pin Configuration 387
11.1.4 Register Configuration 388
11.2 Register Descriptions 388
11.2.1 PWM Control Register (PWCRm) 388
11.2.2 PWM Data Registers U and L (PWDRUm, PWDRLm) 390
11.2.3 Clock Stop Register 2 (CKSTPR2) 391
11.3 Operation 392
11.3.1 Operation 392
11.3.2 PWM Operation Modes 393

Section 12 A/D Converter 395
12.1 Overview 395
12.1.1 Features 395
12.1.2 Block Diagram 396
12.1.3 Pin Configuration 397
12.1.4 Register Configuration 397
12.2 Register Descriptions 398
12.2.1 A/D Result Registers (ADRRH, ADRRL) 398
12.2.2 A/D Mode Register (AMR) 398
12.2.3 A/D Start Register (ADSR) 400
12.2.4 Clock Stop Register 1 (CKSTPR1) 401
12.3 Operation 402
12.3.1 A/D Conversion Operation 402

12.3.2 Start of A/D Conversion by External Trigger Input 402
12.3.3 A/D Converter Operation Modes 403
12.4 Interrupts 403
12.5 Typical Use 403
12.6 A/D Conversion Accuracy Definitions 407
12.7 Application Notes 409
12.7.1 Permissible Signal Source Impedance 409
12.7.2 Influences on Absolute Precision 409
12.7.3 Additional Usage Notes 410

Section 13 LCD Controller/Driver 411
13.1 Overview 411
13.1.1 Features 411
13.1.2 Block Diagram 412
13.1.3 Pin Configuration 414
13.1.4 Register Configuration 414
13.2 Register Descriptions 415
13.2.1 LCD Port Control Register (LPCR) 415
13.2.2 LCD Control Register (LCR) 417
13.2.3 LCD Control Register 2 (LCR2) 419
13.2.4 Clock Stop Register 2 (CKSTPR2) 421
13.3 Operation 422
13.3.1 Settings up to LCD Display 422
13.3.2 Relationship between LCD RAM and Display 424
13.3.3 Operation in Power-Down Modes 429
13.3.4 Boosting the LCD Drive Power Supply 430

Section 14 Power-On Reset and Low-Voltage Detection Circuits (H8/38124 Group Only) 431
14.1 Overview 431
14.1.1 Features 431
14.1.2 Block Diagram 432
14.1.3 Pin Description 433
14.1.4 Register Descriptions 433
14.2 Individual Register Descriptions 433
14.2.1 Low-Voltage Detection Control Register (LVDCR) 433
14.2.2 Low-Voltage Detection Status Register (LVDSR) 436
14.2.3 Low-Voltage Detection Counter (LVDCNT) 438
14.2.4 Clock Stop Register 2 (CKSTPR2) 438
14.3 Operation 439

14.3.1 Power-On Reset Circuit 439
14.3.2 Low-Voltage Detection Circuit 440

Section 15 Power Supply Circuit (H8/38124 Group Only) 447
15.1 When Using Internal Power Supply Step-Down Circuit 447
15.2 When Not Using Internal Power Supply Step-Down Circuit 448

Section 16 Electrical Characteristics 449
16.1 H8/38024 Group ZTAT Version and Mask ROM Version Absolute Maximum Ratings 449
16.2 H8/38024 Group ZTAT Version and Mask ROM Version Electrical Characteristics 450
16.2.1 Power Supply Voltage and Operating Range 450
16.2.2 DC Characteristics 453
16.2.3 AC Characteristics 459
16.2.4 A/D Converter Characteristics 462
16.2.5 LCD Characteristics 464
16.3 H8/38024 Group F-ZTAT Version and H8/38024R Group F-ZTAT Version Absolute Maximum Ratings 465
16.4 H8/38024 Group F-ZTAT Version and H8/38024R Group F-ZTAT Version Electrical Characteristics 466
16.4.1 Power Supply Voltage and Operating Range 466
16.4.2 DC Characteristics 469
16.4.3 AC Characteristics 476
16.4.4 A/D Converter Characteristics 479
16.4.5 LCD Characteristics 480
16.4.6 Flash Memory Characteristics 481
16.4.7 Power Supply Characteristics 482
16.5 H8/38024S Group Mask ROM Version Absolute Maximum Ratings 483
16.6 H8/38024S Group Mask ROM Version Electrical Characteristics 484
16.6.1 Power Supply Voltage and Operating Range 484
16.6.2 DC Characteristics 487
16.6.3 AC Characteristics 495
16.6.4 A/D Converter Characteristics 499
16.6.5 LCD Characteristics 500
16.7 Absolute Maximum Ratings of H8/38124 Group F-ZTAT Version and Mask ROM Version 501
16.8 Electrical Characteristics of H8/38124 Group F-ZTAT Version and Mask ROM Version 502
16.8.1 Power Supply Voltage and Operating Ranges 502
16.8.2 DC Characteristics 506

16.8.3 AC Characteristics 515
16.8.4 A/D Converter Characteristics 517
16.8.5 LCD Characteristics 518
16.8.6 Flash Memory Characteristics 519
16.8.7 Power Supply Voltage Detection Circuit Characteristics 521
16.8.8 Power-On Reset Circuit Characteristics 524
16.8.9 Watchdog Timer Characteristics 525
16.8.10 Power Supply Characteristics 525
16.9 Operation Timing 526
16.10 Output Load Circuit 528
16.11 Resonator Equivalent Circuit 529
16.12 Usage Note 530

Appendix A CPU Instruction Set 531
A.1 Instructions 531
A.2 Operation Code Map 539
A.3 Number of Execution States 541

Appendix B Internal I/O Registers 546
B.1 Addresses 546
B.2 Functions 551

Appendix C I/O Port Block Diagrams 612
C.1 Block Diagrams of Port 1 612
C.2 Block Diagrams of Port 3 615
C.3 Block Diagrams of Port 4 620
C.4 Block Diagram of Port 5 624
C.5 Block Diagram of Port 6 625
C.6 Block Diagram of Port 7 626
C.7 Block Diagram of Port 8 627
C.8 Block Diagrams of Port 9 628
C.9 Block Diagram of Port A 630
C.10 Block Diagrams of Port B 631

Appendix D Port States in the Different Processing States 634

Appendix E List of Product Codes 635

Appendix F Package Dimensions 639

Appendix G Specifications of Chip Form 643

Appendix H Form of Bonding Pads 645

Appendix I Specifications of Chip Tray 646

Main Revisions for This Edition 649

Section 1 Overview

1.1 Overview

The H8/300L Series is a series of single-chip microcomputers (MCU: microcomputer unit), built around the high-speed H8/300L CPU and equipped with peripheral system functions on-chip.

Within the H8/300L Series, the H8/38024 Group, H8/38024S Group, and H8/38124 Group comprise single-chip microcomputers equipped with a LCD (Liquid Crystal Display) controller/driver. Other on-chip peripheral functions include six timers, a two-channel 10-bit pulse width modulator (PWM), a serial communication interface, and an A/D converter. Together, these functions make the H8/38024 Group, H8/38024S Group, and H8/38124 Group ideally suited for embedded applications in systems requiring low power consumption and LCD display. Models in the H8/38024 Group, H8/38024S Group, and H8/38124 Group are the H8/38024, H8/38024S, and H8/38124 with on-chip 32-Kbyte ROM and 1-Kbyte RAM, the H8/38023, H8/38023S, and H8/38123 with on-chip 24-Kbyte ROM and 1-Kbyte RAM, the H8/38022, H8/38022S, and H8/38122 with on-chip 16-Kbyte ROM and 1-Kbyte RAM, the H8/38021, H8/38021S, and H8/38121 with 12-Kbyte ROM and 512 byte RAM, and the H8/38020, H8/38020S, and H8/38120 with 8-Kbyte ROM and 512 byte RAM.

The H8/38024 is also available in a ZTAT™*1 version with on-chip PROM which can be programmed as required by the user. The H8/38024 is also available in F-ZTAT™*2 versions with on-chip flash memory which can be reprogrammed on board.

The H8/38124 is also available in an F-ZTAT™ version with on-chip flash memory that can be programmed on board.

Table 1.1 summarizes the features of the H8/38024 Group, H8/38024S Group, and H8/38124 Group.

Notes: 1. ZTAT (Zero Turn Around Time) is a trademark of Renesas Technology Corp.
2. F-ZTAT is a trademark of Renesas Technology Corp.

Table 1.1 Features

Item	Specification
CPU	High-speed H8/300L CPU • General-register architecture General registers: Sixteen 8-bit registers (can be used as eight 16-bit registers) • Operating speed — Max. operating speed: 8 MHz (5 MHz for HD64F38024 and H8/38024S Group) — Add/subtract: 0.25 µs (operating at 8 MHz), 0.4 µs (operating at ϕ = 5 MHz) — Multiply/divide: 1.75 µs (operating at 8 MHz), 2.8 µs (operating at ϕ = 5 MHz) — Can run on 32.768 kHz or 38.4 kHz subclock (32.768 kHz only for H8/38124 Group) • Instruction set compatible with H8/300 CPU — Instruction length of 2 bytes or 4 bytes — Basic arithmetic operations between registers — MOV instruction for data transfer between memory and registers • Typical instructions — Multiply (8 bits × 8 bits) — Divide (16 bits ÷ 8 bits) — Bit accumulator — Register-indirect designation of bit position
Interrupts	22 interrupt sources • 13 external interrupt sources (IRQ_4, IRQ_3, IRQ_1, IRQ_0, WKP_7 to WKP_0, IRQAEC) • 9 internal interrupt sources

Item	Specification
Clock pulse generators	Two on-chip clock pulse generators • System clock pulse generator: 1.0 to 16 MHz: H8/38024 Group 1.0 to 10 MHz: HD64F38024, HD64F38024R, and H8/38024S Group 2.0 to 20 MHz: H8/38124 Group • Subclock pulse generator: 32.768 kHz, 38.4 kHz* (* does not apply to H8/38124 Group) H8/38124 Group equipped with on-chip oscillator
Power-down modes	Seven power-down modes • Sleep (high-speed) mode • Sleep (medium-speed) mode • Standby mode • Watch mode • Subsleep mode • Subactive mode • Active (medium-speed) mode
Memory	Large on-chip memory • H8/38024, H8/38024S, and H8/38124: 32-Kbyte ROM, 1-Kbyte RAM • H8/38023, H8/38023S, and H8/38123: 24-Kbyte ROM, 1-Kbyte RAM • H8/38022, H8/38022S, and H8/38122: 16-Kbyte ROM, 1-Kbyte RAM • H8/38021, H8/38021S, and H8/38121: 12-Kbyte ROM, 512 byte RAM • H8/38020, H8/38020S, and H8/38120: 8-Kbyte ROM, 512 byte RAM
I/O ports	66 pins • 51 I/O pins (50 pins on H8/38124 Group) • 9 input pins • 6 output pins

Item	Specification
Timers	Six on-chip timers • Timer A: 8-bit timer Count-up timer with selection of eight internal clock signals divided from the system clock (ϕ)* and four clock signals divided from the watch clock (ϕ_W)* • Asynchronous event counter: 16-bit timer — Count-up timer able to count asynchronous external events independently of the MCU's internal clocks Asynchronous external events can be counted (both rising and falling edge detection possible) • Timer C: 8-bit timer — Count-up/down timer with selection of seven internal clock signals or event input from external pin — Auto-reloading • Timer F: 16-bit timer — Can be used as two independent 8-bit timers — Count-up timer with selection of four internal clock signals or event input from external pin — Provision for toggle output by means of compare-match function • Timer G: 8-bit timer — Count-up timer with selection of four internal clock signals — Incorporates input capture function (built-in noise canceler) • Watchdog timer — Reset signal generated by overflow of 8-bit counter

Item	Specification
Serial communication interface	• SCI3: 8-bit synchronous/asynchronous serial interface
10-bit PWM	Pulse-division PWM output for reduced ripple • Can be used as a 10-bit D/A converter by connecting to an external low-pass filter.
A/D converter	Successive approximations using a resistance ladder • 8-channel analog input pins • Conversion time: 31/ϕ or 62/ϕ per channel
LCD controller/ driver	LCD controller/driver equipped with a maximum of 32 segment pins and four common pins • Choice of four duty cycles (static, 1/2, 1/3, or 1/4) • Segment pins can be switched to general-purpose port function in 4-bit units
Power-on reset and low-voltage detect circuits (H8/38124 Group only)	Power-on reset circuit • An internal reset signal can be issued at power-on by connecting an external capacitor. Low-voltage detect circuit • Monitors the power supply voltage and issues an internal reset signal or interrupt if the voltage goes below or above a specified range.

Item	Specification				
Product lineup	Product Code				
	Mask ROM Version	ZTAT Version	F-ZTAT Version	Package	ROM/RAM Size (Byte)
	HD64338024	HD64738024	HD64F38024R HD64F38024	FP-80A FP-80B TFP-80C TLP-85V (HD64F38024R only) Die (mask ROM/F-ZTAT version only)	32K/1K
	HD64338023	—	—	FP-80A FP-80B TFP-80C Die	24K/1K
	HD64338022	—	—	FP-80A FP-80B TFP-80C Die	16K/1K
	HD64338021	—	—	FP-80A FP-80B TFP-80C Die	12K/512
	HD64338020	—	—	FP-80A FP-80B TFP-80C Die	8K/512
	HD64338024S	—	—	FP-80A TFP-80C TLP-85V Die	32K/1K
	HD64338023S	—	—	FP-80A TFP-80C TLP-85V Die	24K/1K
	HD64338022S	—	—	FP-80A TFP-80C TLP-85V Die	16K/1K
	HD64338021S	—	—	FP-80A TFP-80C TLP-85V Die	12K/512
	HD64338020S	—	—	FP-80A TFP-80C TLP-85V Die	8K/512
	HD64338124	—	HD64F38124	FP-80A TFP-80C	32K/1K
	HD64338123	—	—	FP-80A TFP-80C	24K/1K
	HD64338122	—	HD64F38122	FP-80A TFP-80C	16K/1K
	HD64338121	—	—	FP-80A TFP-80C	12K/512
	HD64338120	—	—	FP-80A TFP-80C	8K/512
	Refer to appendix E for information on product model numbers.				

Note: * See section 4, Clock Pulse Generators, for the definition of ϕ and ϕ_W.

1.2 Internal Block Diagram

Figure 1.1(1) shows a block diagram of the H8/38024 Group and H8/38024S Group.

Figure 1.1(2) shows a block diagram of the H8/38124 Group.

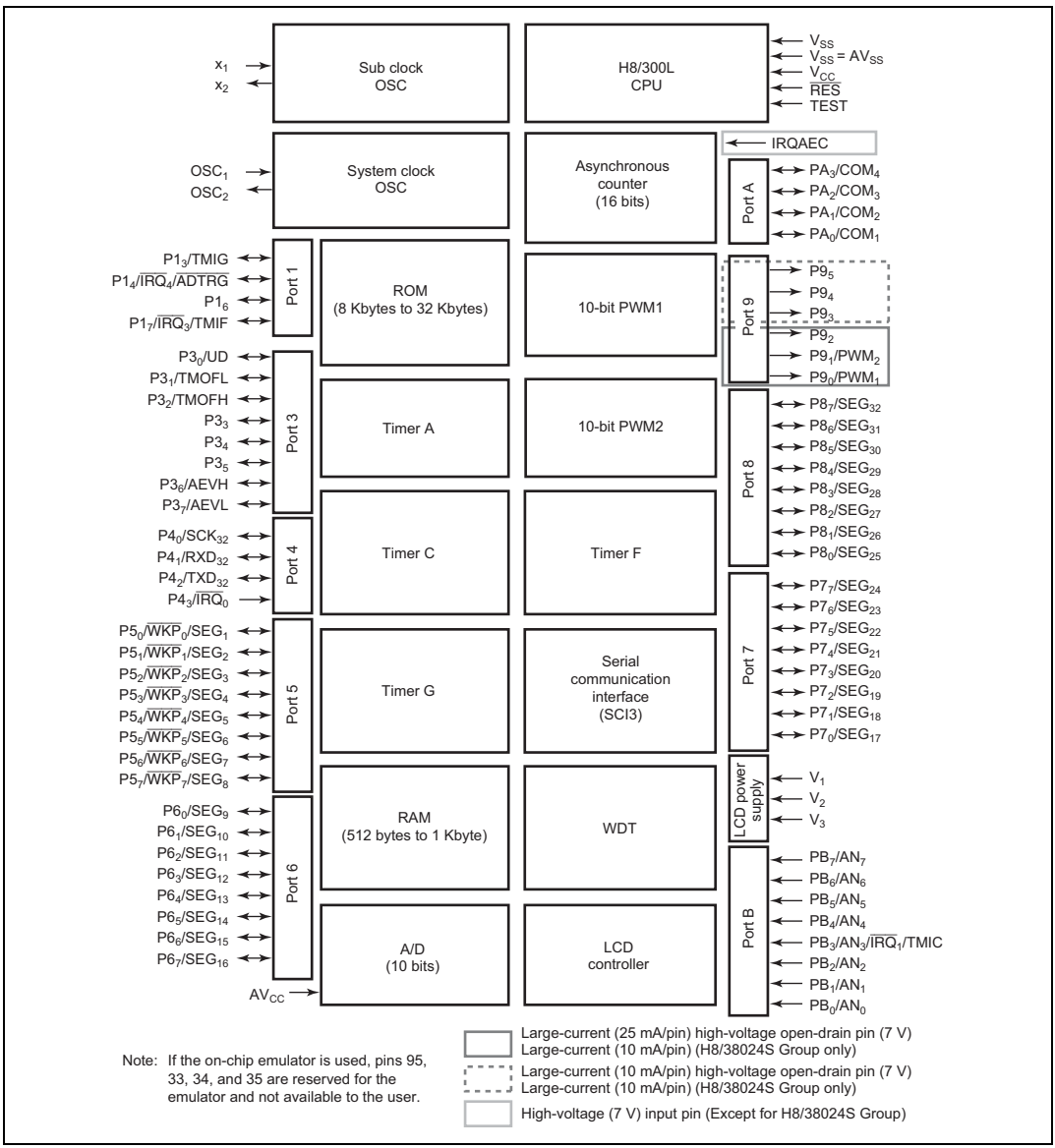

Figure 1.1(1) Block Diagram (H8/38024 Group, H8/38024R Group, and H8/38024S Group)

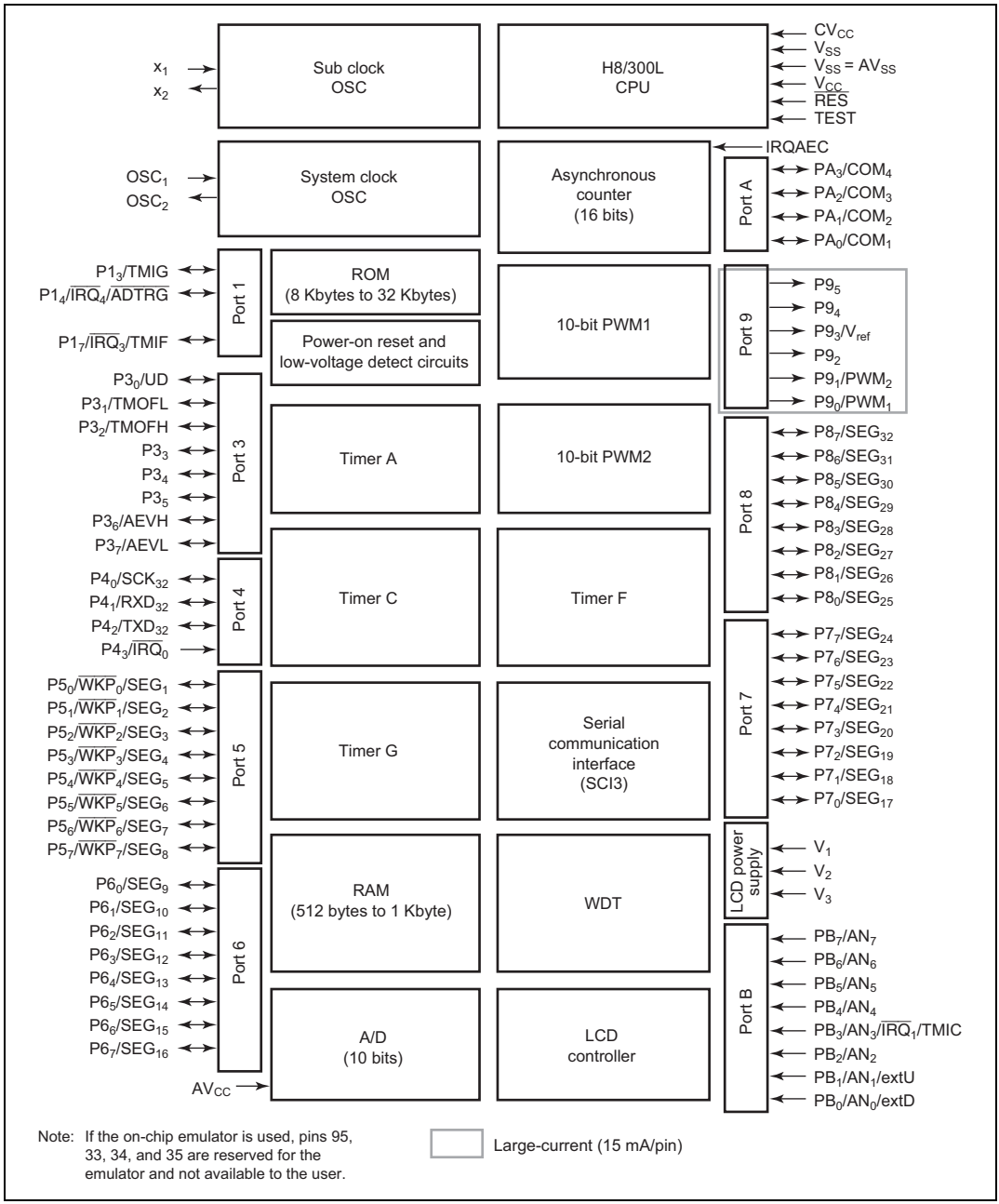

Figure 1.1(2) Block Diagram (H8/38124 Group)

1.3 Pin Arrangement and Functions

1.3.1 Pin Arrangement

The H8/38024 Group, H8/38024R Group, H8/38024S Group, and H8/38124 Group pin arrangements are shown in figures 1.2, 1.3, and 1.4. The bonding pad location diagram of the HCD64338024, HCD64338023, HCD64338022, HCD64338021, and HCD64338020 is shown in figure 1.5. The bonding pad coordinates of the HCD64338024, HCD64338023, HCD64338022, HCD64338021, and HCD64338020 are given in table 1.2. The bonding pad location diagram of the HCD64F38024, HCD64F38024R is shown in figure 1.6. The bonding pad coordinates of the HCD64F38024 are given in table 1.3. The bonding pad location diagram of the HCD64338024S, HCD64338023S, HCD64338022S, HCD64338021S, and HCD64338020S is shown in figure 1.7. The bonding pad coordinates of the HCD64338024S, HCD64338023S, HCD64338022S, HCD64338021S, and HCD64338020S are given in table 1.4.

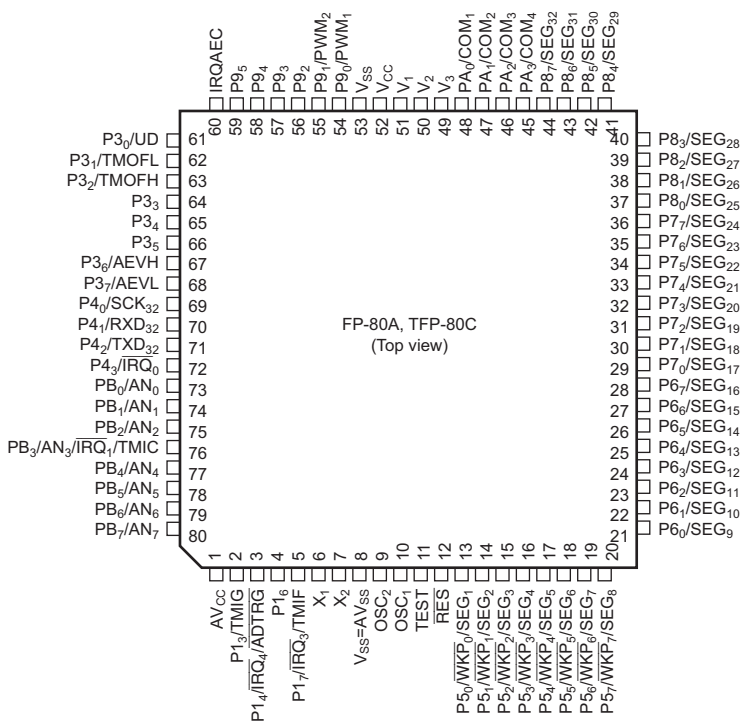

Note: If the on-chip emulator is used, pins 95, 33, 34, and 35 are reserved for the emulator and not available to the user.

Figure 1.2(1) Pin Arrangement (FP-80A, TFP-80C: Top View, H8/38024 Group, H8/38024R Group, H8/38024S Group)

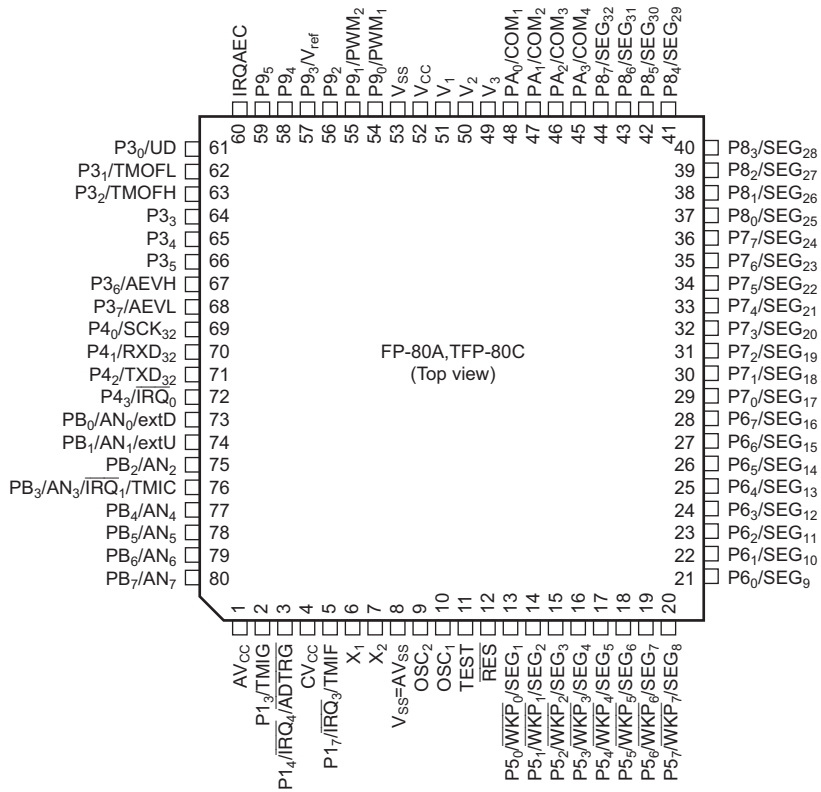

Note: If the on-chip emulator is used, pins 95, 33, 34, and 35 are reserved for the emulator and not available to the user.

Figure 1.2(2) Pin Arrangement (FP-80A, TFP-80C: Top View, H8/38124 Group)

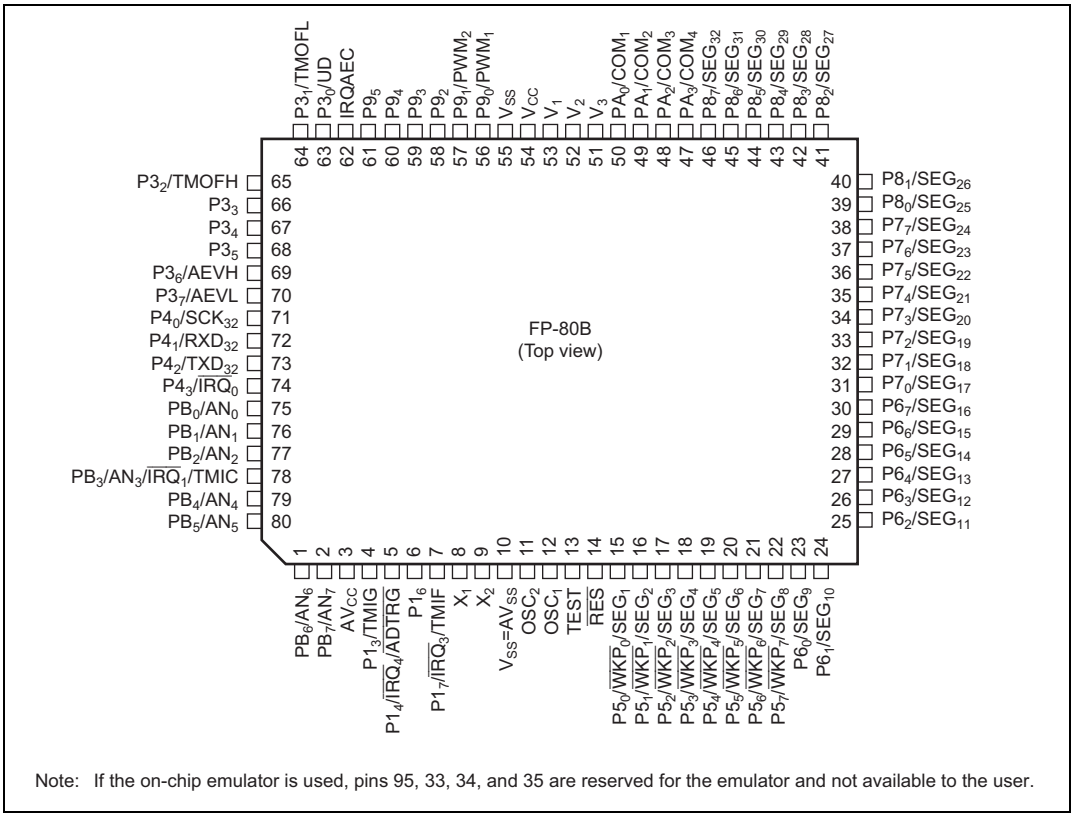

Note: If the on-chip emulator is used, pins 95, 33, 34, and 35 are reserved for the emulator and not available to the user.

Figure 1.3 Pin Arrangement (FP-80B: Top View, H8/38024 Group, H8/38024R Group)

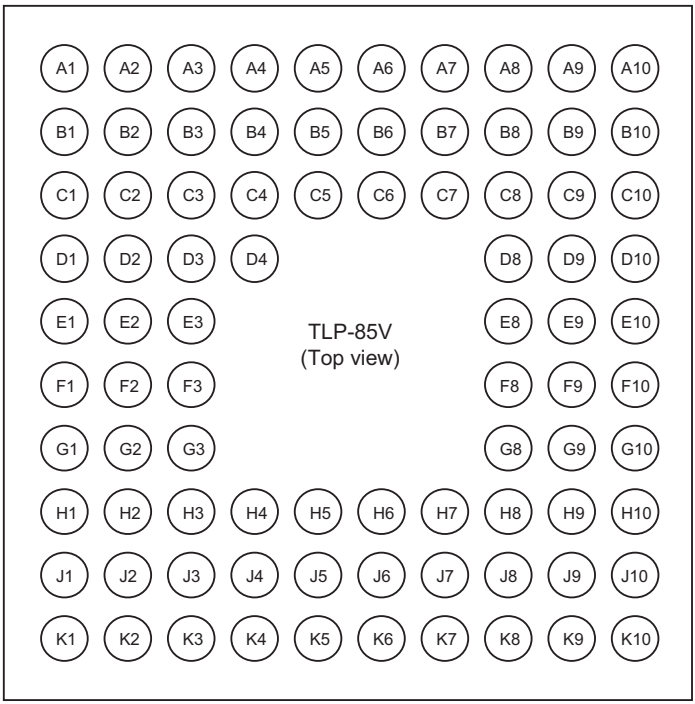

Note: Pins are shown in transparent view.

Figure 1.4 Pin Arrangement (TLP-85V, H8/38024R Group, H8/38024S Group)

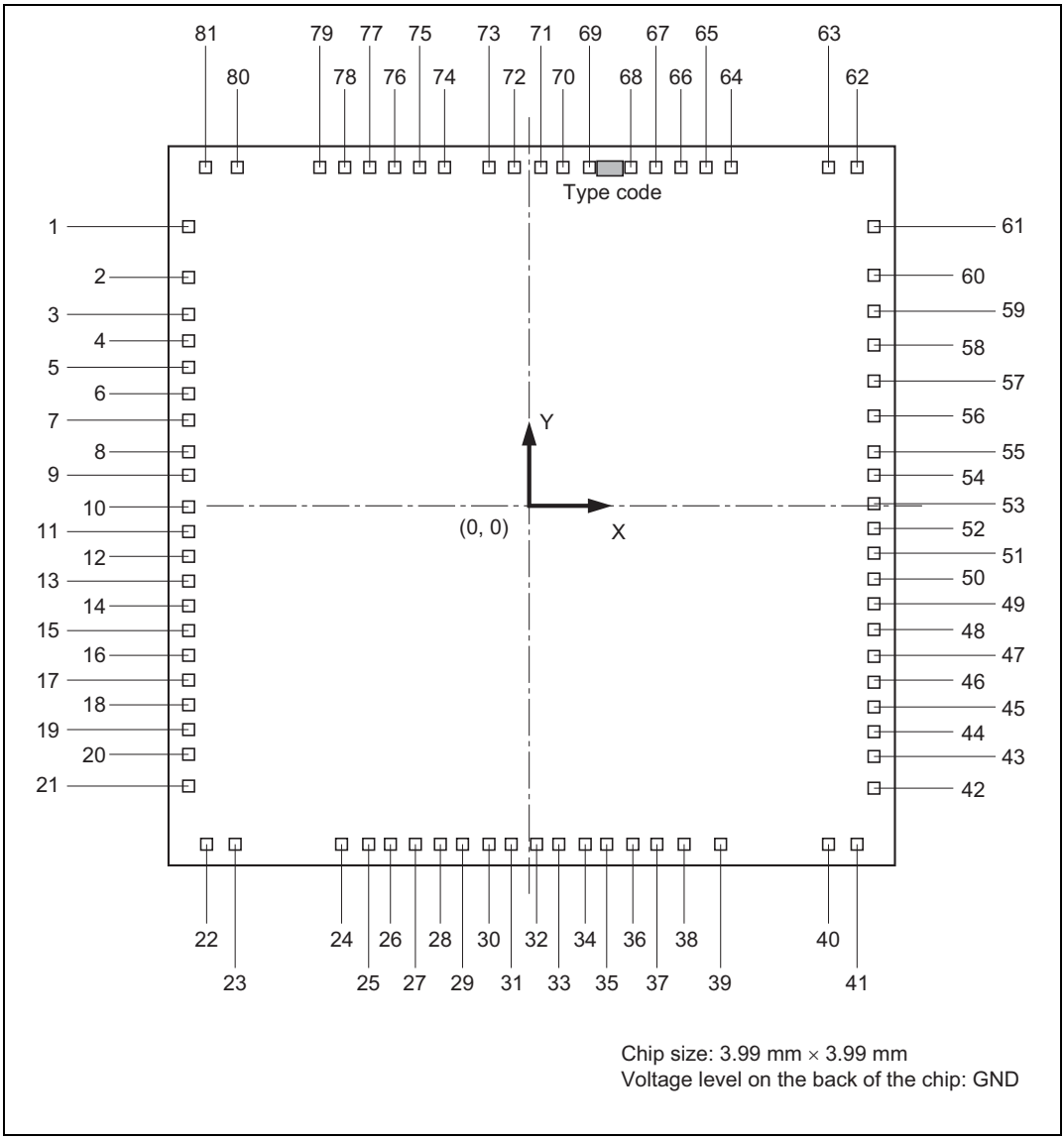

Figure 1.5 Bonding Pad Location Diagram of HCD64338024, HCD64338023, HCD64338022, HCD64338021, and HCD64338020 (Top View)

Table 1.2 Bonding Pad Coordinates of HCD64338024, HCD64338023, HCD64338022, HCD64338021, and HCD64338020

Pad No.	Pad Name	Coordinates X (μm)	Coordinates Y (μm)
1	AV_{CC}	–1870	1546
2	P13/TMIG	–1870	1274
3	P14/$\overline{IRQ4}$/$\overline{ADTRG}$	–1870	1058
4	P16	–1870	909
5	P17/$\overline{IRQ3}$/TMIF	–1870	759
6	X1	–1870	608
7	X2	–1870	475
8	AV_{SS}	–1870	304
9	V_{SS}	–1870	173
10	OSC2	–1870	–10
11	OSC1	–1870	–150
12	TEST	–1870	–290
13	$\overline{RES}$	–1870	–425
14	P50/$\overline{WKP0}$/SEG1	–1870	–560
15	P51/$\overline{WKP1}$/SEG2	–1870	–695
16	P52/$\overline{WKP2}$/SEG3	–1870	–831
17	P53/$\overline{WKP3}$/SEG4	–1870	–966
18	P54/$\overline{WKP4}$/SEG5	–1870	–1101
19	P55/$\overline{WKP5}$/SEG6	–1870	–1236
20	P56/$\overline{WKP6}$/SEG7	–1870	–1379
21	P57/$\overline{WKP7}$/SEG8	–1870	–1561
22	P60/SEG9	–1780	–1872
23	P61/SEG10	–1621	–1872
24	P62/SEG11	–1037	–1872
25	P63/SEG12	–896	–1872
26	P64/SEG13	–765	–1872
27	P65/SEG14	–635	–1872
28	P66/SEG15	–502	–1872
29	P67/SEG16	–371	–1872
30	P70/SEG17	–239	–1872
31	P71/SEG18	–108	–1872
32	P72/SEG19	23	–1872
33	P73/SEG20	156	–1872
34	P74/SEG21	287	–1872
35	P75/SEG22	419	–1872
36	P76/SEG23	550	–1872
37	P77/SEG24	682	–1872
38	P80/SEG25	833	–1872
39	P81/SEG26	1040	–1872
40	P82/SEG27	1621	–1872
41	P83/SEG28	1782	–1872
42	P84/SEG29	1870	–1571
43	P85/SEG30	1870	–1395
44	P86/SEG31	1870	–1251
45	P87/SEG32	1870	–1111
46	PA3/COM4	1870	–970
47	PA2/COM3	1870	–831
48	PA1/COM2	1870	–691
49	PA0/COM1	1870	–550
50	V3	1870	–410
51	V2	1870	–270
52	V1	1870	–131
53	V_{CC}	1870	10
54	V_{SS}	1870	150
55	P90/PWM1	1870	293
56	P91/PWM2	1870	489
57	P92	1870	685
58	P93	1870	880
59	P94	1870	1076
60	P95	1870	1274
61	IRQAEC	1870	1546
62	P30/UD	1782	1872
63	P31/TMOFL	1621	1872
64	P32/TMOFH	1084	1872
65	P33	948	1872
66	P34	810	1872
67	P35	673	1872
68	P36/AEVH	536	1872
69	P37/AEVL	311	1872
70	P40/SCK32	176	1872
71	P41/RXD32	38	1872
72	P42/TXD32	–99	1872
73	P43/$\overline{IRQ0}$	–234	1872
74	PB0/AN0	–482	1872
75	PB1/AN1	–614	1872
76	PB2/AN2	–745	1872
77	PB3/AN3/$\overline{IRQ1}$/TMIC	–878	1872
78	PB4/AN4	–1008	1872
79	PB5/AN5	–1148	1872
80	PB6/AN6	–1621	1872
81	PB7/AN7	–1782	1872

Note: V_{SS} Pads (No. 8 and 9) should be connected to power supply lines.
TEST Pad (No. 12) should be connected to V_{SS}.
If the pad of these aren't connected to the power supply line, the LSI will not operate correctly. These values show the coordinates of the centers of pads. The accuracy is ±5 μm. The home-point position is the chip's center and the center is located at half the distance between the upper and lower pads and left and right pads.

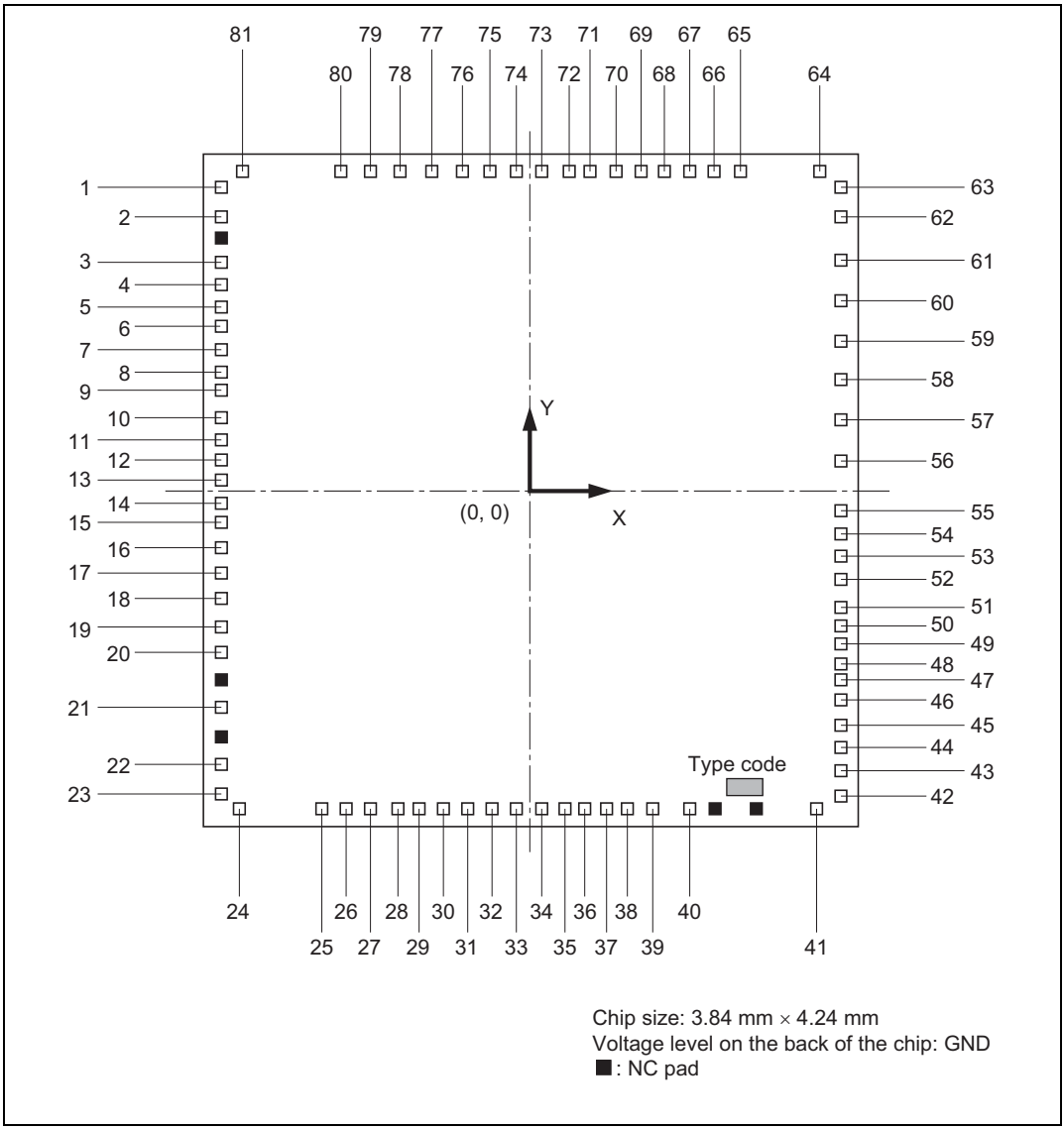

Figure 1.6 Bonding Pad Location Diagram of HCD64F38024, HCD64F38024R (Top View)

Table 1.3 Bonding Pad Coordinates of HCD64F38024, HCD64F38024R

Pad No.	Pad Name	Coordinates X (μm)	Coordinates Y (μm)
1	PB7/AN7	–1802	1904
2	AV_{CC}	–1802	1717
3	P13/TMIG	–1802	1443
4	P14/$\overline{IRQ4}$/$\overline{ADTRG}$	–1802	1292
5	P16	–1802	1157
6	P17/$\overline{IRQ3}$/TMIF	–1802	1022
7	X1	–1802	887
8	X2	–1802	753
9	AV_{SS}	–1802	638
10	V_{SS}	–1802	473
11	OSC2	–1802	318
12	OSC1	–1802	202
13	TEST	–1802	69
14	$\overline{RES}$	–1802	–63
15	P50/$\overline{WKP0}$/SEG1	–1802	–195
16	P51/$\overline{WKP1}$/SEG2	–1802	–355
17	P52/$\overline{WKP2}$/SEG3	–1802	–514
18	P53/$\overline{WKP3}$/SEG4	–1802	–674
19	P54/$\overline{WKP4}$/SEG5	–1802	–844
20	P55/$\overline{WKP5}$/SEG6	–1802	–1008
21	P56/$\overline{WKP6}$/SEG7	–1802	–1348
22	P57/$\overline{WKP7}$/SEG8	–1802	–1709
23	P60/SEG9	–1802	–1904
24	P61/SEG10	–1686	–1999
25	P62/SEG11	–1198	–1999
26	P63/SEG12	–1057	–1999
27	P64/SEG13	–916	–1999
28	P65/SEG14	–755	–1999
29	P66/SEG15	–625	–1999
30	P67/SEG16	–493	–1999
31	P70/SEG17	–352	–1999
32	P71/SEG18	–202	–1999
33	P72/SEG19	–69	–1999
34	P73/SEG20	72	–1999
35	P74/SEG21	213	–1999
36	P75/SEG22	330	–1999
37	P76/SEG23	459	–1999
38	P77/SEG24	583	–1999
39	P80/SEG25	730	–1999
40	P81/SEG26	937	–1999
41	P82/SEG27	1686	–1999
42	P83/SEG28	1802	–1898
43	P84/SEG29	1802	–1750
44	P85/SEG30	1802	–1594
45	P86/SEG31	1802	–1454
46	P87/SEG32	1802	–1296
47	PA3/COM4	1802	–1182
48	PA2/COM3	1802	–1068
49	PA1/COM2	1802	–954
50	PA0/COM1	1802	–840
51	V3	1802	–726
52	V2	1802	–534
53	V1	1802	–402
54	V_{CC}	1802	–267
55	V_{SS}	1802	–126
56	P90/PWM1	1802	206
57	P91/PWM2	1802	457
58	P92	1802	707
59	P93	1802	958
60	P94	1802	1209
61	P95	1802	1460
62	IRQAEC	1802	1710
63	P30/UD	1802	1904
64	P31/TMOFL	1686	1999
65	P32/TMOFH	1222	1999
66	P33	1077	1999
67	P34	932	1999
68	P35	788	1999
69	P36/AEVH	643	1999
70	P37/AEVL	498	1999
71	P40/SCK32	353	1999
72	P41/RXD32	226	1999
73	P42/TXD32	63	1999
74	P43/$\overline{IRQ0}$	–82	1999
75	PB0/AN0	–229	1999
76	PB1/AN1	–404	1999
77	PB2/AN2	–577	1999
78	PB3/AN3/$\overline{IRQ1}$/TMIC	–751	1999
79	PB4/AN4	–925	1999
80	PB5/AN5	–1099	1999
81	PB6/AN6	–1686	1999

Note: V_{SS} Pads (No. 9 and 10) should be connected to power supply lines.
TEST Pad (No. 13) should be connected to V_{SS}.
If the pad of these aren't connected to the power supply line, the LSI will not operate correctly. These values show the coordinates of the centers of pads. The accuracy is ±5 μm. The home-point position is the chip's center and the center is located at half the distance between the upper and lower pads and left and right pads.

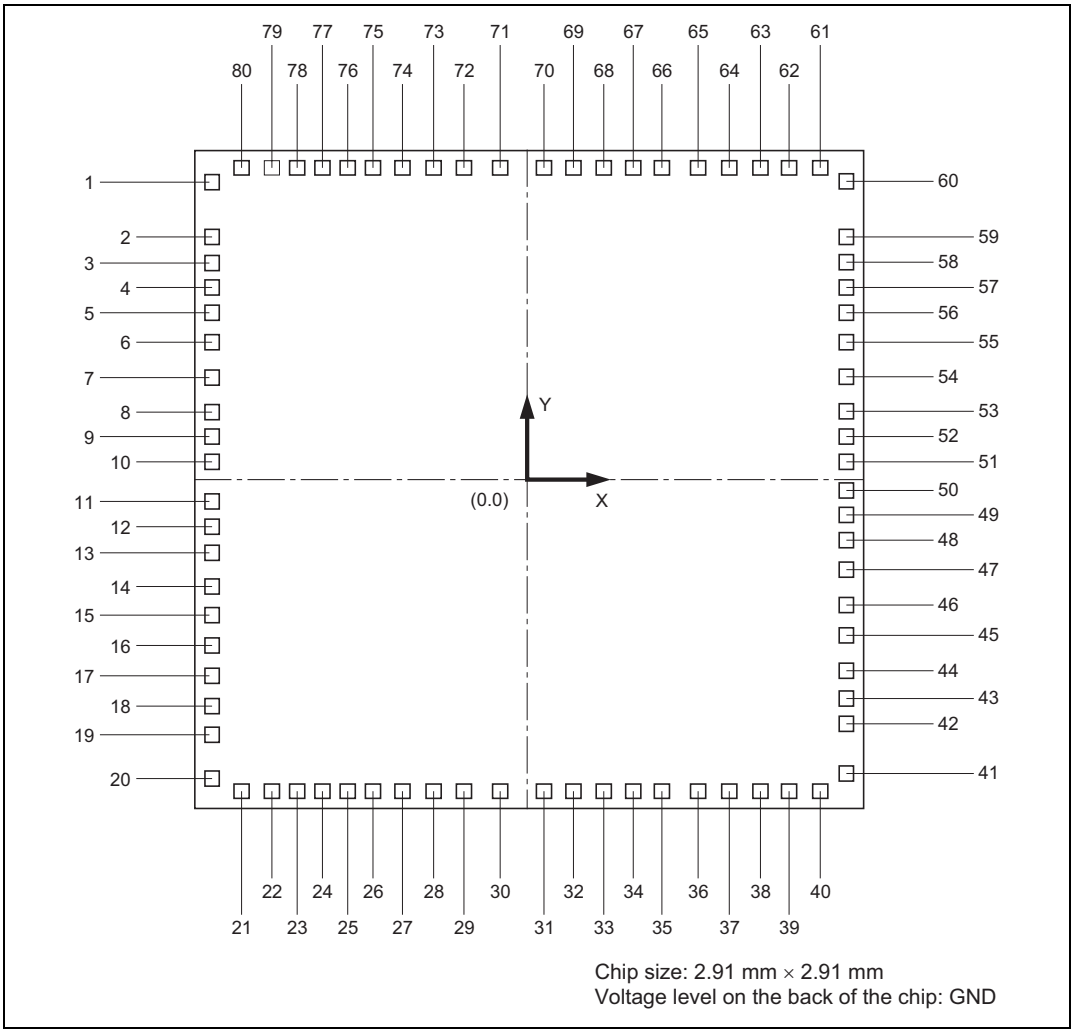

Figure 1.7 Bonding Pad Location Diagram of HCD64338024S, HCD64338023S, HCD64338022S, HCD64338021S, and HCD64338020S (Top View)

Table 1.4 Bonding Pad Coordinates of HCD64338024S, HCD64338023S, HCD64338022S, HCD64338021S, and HCD64338020S

Pad No.	Pad Name	Coordinates X (μm)	Coordinates Y (μm)
1	AV_{CC}	–1338	1053
2	P13/TMIG	–1338	823
3	P14/$\overline{IRQ4}$/$\overline{ADTRG}$	–1338	737
4	P16	–1338	649
5	P17/$\overline{IRQ3}$/TMIF	–1338	556
6	X1	–1338	460
7	X2	–1338	363
8	V_{SS} = AV_{SS}	–1338	229
9	OSC2	–1338	100
10	OSC1	–1338	13
11	TEST	–1338	–74
12	$\overline{RES}$	–1338	–168
13	P50/$\overline{WKP0}$/SEG1	–1338	–265
14	P51/$\overline{WKP1}$/SEG2	–1338	–373
15	P52/$\overline{WKP2}$/SEG3	–1338	–481
16	P53/$\overline{WKP3}$/SEG4	–1338	–590
17	P54/$\overline{WKP4}$/SEG5	–1338	–698
18	P55/$\overline{WKP5}$/SEG6	–1338	–806
19	P56/$\overline{WKP6}$/SEG7	–1338	–892
20	P57/$\overline{WKP7}$/SEG8	–1338	–1091
21	P60/SEG9	–1121	–1338
22	P61/SEG10	–927	–1338
23	P62/SEG11	–805	–1338
24	P63/SEG12	–703	–1338
25	P64/SEG13	–593	–1338
26	P65/SEG14	–483	–1338
27	P66/SEG15	–372	–1338
28	P67/SEG16	–263	–1338
29	P70/SEG17	–166	–1338
30	P71/SEG18	–47	–1338
31	P72/SEG19	55	–1338
32	P73/SEG20	166	–1338
33	P74/SEG21	277	–1338
34	P75/SEG22	388	–1338
35	P76/SEG23	499	–1338
36	P77/SEG24	610	–1338
37	P80/SEG25	701	–1338
38	P81/SEG26	790	–1338
39	P82/SEG27	885	–1338
40	P83/SEG28	1076	–1338
41	P84/SEG29	1338	–1121
42	P85/SEG30	1338	–929
43	P86/SEG31	1338	–820
44	P87/SEG32	1338	–721
45	PA3/COM4	1338	–610
46	PA2/COM3	1338	–499
47	PA1/COM2	1338	–388
48	PA0/COM1	1338	–277
49	V3	1338	–189
50	V2	1338	–91
51	V1	1338	6
52	V_{CC}	1338	156
53	V_{SS}	1338	362
54	P90/PWM1	1338	528
55	P91/PWM2	1338	614
56	P92	1338	699
57	P93	1338	785
58	P94	1338	871
59	P95	1338	957
60	IRQAEC	1338	1147
61	P30/UD	1131	1338
62	P31/TMOFL	936	1338
63	P32/TMOFH	831	1338
64	P33	735	1338
65	P34	631	1338
66	P35	526	1338
67	P36/AEVH	421	1338
68	P37/AEVL	317	1338
69	P40/SCK32	212	1338
70	P41/RXD32	108	1338
71	P42/TXD32	3	1338
72	P43/$\overline{IRQ0}$	–101	1338
73	PB0/AN0	–249	1338
74	PB1/AN1	–362	1338
75	PB2/AN2	–476	1338
76	PB3/AN3/$\overline{IRQ1}$/TMIC	–589	1338
77	PB4/AN4	–702	1338
78	PB5/AN5	–791	1338
79	PB6/AN6	–880	1338
80	PB7/AN7	–1081	1338

Note: Pad No. 11 (TEST) should be connected to V_{SS}.
If it is not connected, the LSI will not operate correctly.
These values show the coordinates of the centers of pads. The accuracy is ±5 μm.
The home-point position is the chip's center and the center is located at halfway between the upper and lower pads and the left and right pads.

1.3.2 Pin Functions

Table 1.5 outlines the pin functions of the H8/38024 Group.

Table 1.5 Pin Functions

		Pin No.							
Type	**Symbol**	**FP-80A TFP-80C**	**FP-80B**	**TLP-85V**	**Pad No.*1**	**Pad No.*2**	**Pad No.*3**	**I/O**	**Name and Functions**
Power source pins	V_{CC}	52	54	E8	53	54	52	Input	**Power supply:** All V_{CC} pins should be connected to the system power supply.
	V_{SS}	8 (= AV_{SS}) 53	10 (= AV_{SS}) 55	D8 E1 (= AV_{SS})	9 54	10 55	8 53	Input	**Ground:** All V_{SS} pins should be connected to the system power supply (0 V).
	AV_{CC}	1	3	B1	1	2	1	Input	**Analog power supply:** This is the power supply pin for the A/D converter. When the A/D converter is not used, connect this pin to the system power supply.
	AV_{SS}	8 (= V_{SS})	10 (= V_{SS})	E1 (= V_{SS})	8	9	8	Input	**Analog ground:** This is the A/D converter ground pin. It should be connected to the system power supply (0V).
	V_1 V_2 V_3	51 50 49	53 52 51	F9 E9 F8	52 51 50	53 52 51	51 50 49	Input	**LCD power supply:** These are the power supply pins for the LCD controller/driver.
	CV_{CC}*4	4	—	—	—	—	—	Input	**Power supply:** This is the internal step-down power supply pin. To ensure stability, a capacitor with a rating of about 0.1 µF should be connected between this pin and the V_{SS} pin.

Type	Symbol	Pin No. FP-80A TFP-80C	Pin No. FP-80B	Pin No. TLP-85V	Pad No.*1	Pad No.*2	Pad No.*3	I/O	Name and Functions
Clock pins	OSC_1	10	12	F2	11	12	10	Input	These pins connect to a crystal or ceramic oscillator, or can be used to input an external clock. See section 4, Clock Pulse Generators, for a typical connection diagram.
	OSC_2	9	11	E3	10	11	9	Output	
	X_1	6	8	D3	6	7	6	Input	These pins connect to a 32.768-kHz or 38.4-kHz*5 crystal oscillator. See section 4, Clock Pulse Generators, for a typical connection diagram.
	X_2	7	9	D2	7	8	7	Output	
System control	$\overline{RES}$	12	14	F3	13	14	12	Input	**Reset:** When this pin is driven low, the chip is reset
	TEST	11	13	E2	12	13	11	Input	**Test pin:** This pin is reserved and cannot be used. It should be connected to V_{SS}.
Interrupt pins	$\overline{IRQ_0}$ $\overline{IRQ_1}$ $\overline{IRQ_3}$ $\overline{IRQ_4}$	72 76 5 3	74 78 7 5	C5 B3 D1 B2	73 77 5 3	74 78 6 4	72 76 5 3	Input	**IRQ interrupt request 0, 1, 3, and 4:** These are input pins for edge-sensitive external interrupts, with a selection of rising or falling edge
	IRQAEC	60	62	C10	61	62	60	Input	**Asynchronous event counter event signal:** This is an interrupt input pin for enabling asynchronous event input. On the H8/38124 Group, this must be fixed at V_{CC} or GND because the oscillator is selected by the input level during resets. Refer to section 4, Clock Pulse Generators, for information on the selection method.

Type	Symbol	Pin No. FP-80A TFP-80C	Pin No. FP-80B	Pin No. TLP-85V	Pad No.*1	Pad No.*2	Pad No.*3	I/O	Name and Functions
Interrupt pins	$\overline{WKP}_7$ to $\overline{WKP}_0$	20 to 13	22 to 15	H1, J1, H3, G1, H2, G2, F2, G3	21 to 14	22 to 15	20 to 13	Input	**Wakeup interrupt request 7 to 0:** These are input pins for rising or falling-edge-sensitive external interrupts.
Timer pins	AEVL AEVH	68 67	70 69	A6 B7	69 68	70 69	68 67	Input	**Asynchronous event counter event input:** This is an event input pin for input to the asynchronous event counter.
	TMIC	76	78	B3	77	78	76	Input	**Timer C event input:** This is an event input pin for input to the timer C counter.
	UD	61	63	A9	62	63	61	Input	**Timer C up/down select:** This pin selects up- or down-counting for the timer C counter. The counter operates as a down-counter when this pin is high, and as an up-counter when low.
	TMIF	5	7	D1	5	6	5	Input	**Timer F event input:** This is an event input pin for input to the timer F counter.
	TMOFL	62	64	A8	63	64	62	Output	**Timer FL output:** This is an output pin for waveforms generated by the timer FL output compare function.
	TMOFH	63	65	B9	64	65	63	Output	**Timer FH output:** This is an output pin for waveforms generated by the timer FH output compare function.
	TMIG	2	4	C1	2	3	2	Input	**Timer G capture input:** This is an input pin for timer G input capture.

Type	Symbol	Pin No. FP-80A TFP-80C	Pin No. FP-80B	Pin No. TLP-85V	Pad No.*1	Pad No.*2	Pad No.*3	I/O	Name and Functions
10-bit PWM pin	PWM1 PWM2	54 55	56 57	E10 D9	55 56	56 57	54 55	Output	**10-bit PWM output:** These are output pins for waveforms generated by the channel 1 and 2 10-bit PWMs.
I/O ports	$P1_7$ $P1_6$ $P1_4$ $P1_3$	5 4 3 2	7 6 5 4	D1 C2 B2 C1	5 4 3 2	6 5 4 3	5 4 3 2	I/O	**Port 1:** This is a 4-bit I/O port. Input or output can be designated for each bit by means of port control register 1 (PCR1). Note that the H8/38124 Group is not equipped with a pin 16.
	$P3_7$ to $P3_0$	68 to 61	70 to 63	A6, B7 C7, A7 B8, B9 A8, A9	69 to 62	70 to 63	68 to 61	I/O	**Port 3:** This is an 8-bit I/O port. Input or output can be designated for each bit by means of port control register 3 (PCR3). If the on-chip emulator is used, pins 33, 34, and 35 are reserved for the emulator and not available to the user.
	$P4_3$	72	74	C5	73	74	72	Input	**Port 4 (bit 3):** This is a 1-bit input port.
	$P4_2$ to $P4_0$	71 to 69	73 to 71	B6 B5 C6	72 to 70	73 to 71	71 to 69	I/O	**Port 4 (bits 2 to 0):** This is a 3-bit I/O port. Input or output can be designated for each bit by means of port control register 4 (PCR4).
	$P5_7$ to $P5_0$	20 to 13	22 to 15	H1, J1 H3, G1 H2, G2 F1, G3	21 to 14	22 to 15	20 to 13	I/O	**Port 5:** This is an 8-bit I/O port. Input or output can be designated for each bit by means of port control register 5 (PCR5).
	$P6_7$ to $P6_0$	28 to 21	30 to 23	K5, J4 H4, K4 J3, J2 K3, K2	29 to 22	30 to 23	28 to 21	I/O	**Port 6:** This is an 8-bit I/O port. Input or output can be designated for each bit by means of port control register 6 (PCR6).

Type	Symbol	Pin No. FP-80A TFP-80C	Pin No. FP-80B	Pin No. TLP-85V	Pad No.*1	Pad No.*2	Pad No.*3	I/O	Name and Functions
I/O ports	$P7_7$ to $P7_0$	36 to 29	38 to 41	J8, J7 K6, H7 H6, J7 H6, J5 J6, H5	37 to 30	38 to 31	36 to 29	I/O	**Port 7:** This is an 8-bit I/O port. Input or output can be designated for each bit by means of port control register 7 (PCR7).
	$P8_7$ to $P8_0$	44 to 37	46 to 39	H9, J9 H10, J10 K8, K9 H8, K7	45 to 38	46 to 39	44 to 37	I/O	**Port 8:** This is an 8-bit I/O port. Input or output can be designated for each bit by means of port control register 8 (PCR8).
	$P9_5$ to $P9_0$	59 to 54	61 to 56	B10, C8 D10, C9 D9, E10	60 to 55	61 to 56	59 to 54	Output	**Port 9:** This is a 6-bit output port. If the on-chip emulator is used, pin 95 is reserved for the emulator and not available to the user. In the case of the F-ZTAT version, pin 95 should not be left open in the user mode, and should instead be pulled up to high level.
	PA_3 to PA_0	45 to 48	47 to 50	G10 G8 G9 F10	46 to 49	47 to 50	45 to 48	I/O	**Port A:** This is a 4-bit I/O port. Input or output can be designated for each bit by means of port control register A (PCRA).
	PB_7 to PB_0	80 to 73	2, 1, 80 to 75	A3, A2 C3, A4 B3, B4 A5, C4	81 to 74	1, 81 to 75	80 to 73	Input	**Port B:** This is an 8-bit input port.
Serial communi-cation (SCI)	RXD_{32}	70	72	B5	71	72	70	Input	**SCI3 receive data input:** This is the SCI3 data input pin.
	TXD_{32}	71	73	B6	72	73	71	Output	**SCI3 transmit data output:** This is the SCI3 data output pin.
	SCK_{32}	69	71	C6	70	71	69	I/O	**SCI3 clock I/O:** This is the SCI3 clock I/O pin.
A/D converter	AN_7 to AN_0	80 to 73	2, 1, 80 to 75	A3, A2 C3, A4 B3, B4 A5, C4	81 to 74	1, 81 to 75	80 to 73	Input	**Analog input channels 7 to 0:** These are analog data input channels to the A/D converte.

Type	Symbol	Pin No. FP-80A TFP-80C	Pin No. FP-80B	Pin No. TLP-85V	Pad No.*1	Pad No.*2	Pad No.*3	I/O	Name and Functions
A/D converter	$\overline{\text{ADTRG}}$	3	5	B2	3	4	3	Input	**A/D converter trigger input:** This is the external trigger input pin to the A/D converter.
LCD controller/ driver	COM_4 to COM_1	45 to 48	47 to 50	G10, G8 G9, F10	46 to 49	47 to 50	45 to 48	Output	**LCD common output:** These are the LCD common output pins.
	SEG_{32} to SEG_1	44 to 13	46 to 15	H9, J9, H10, J10, K8, K9, H8, K7, J8, J7, K6, H7, H6, J5, J6, H5, K5, J4, H4, K4, J3, J2, K3, K2, H1, J1, H3, G1, H2, G2, F1, G3	45 to 14	46 to 15	44 to 13	Output	**LCD segment output:** These are the LCD segment output pins.
NC	NC	—	—	A1, A10, D4, K2, K10	—	—	—	—	**NC pin**
Low-voltage detect circuit (LVD)*4	V_{ref}	57	—	—	—	—	—	Input	**LVD reference voltage input:** This is the LVD reference voltage input pin.
	extD	73	—	—	—	—	—	Input	**LVD power supply drop detect voltage input:** This is the LVD power supply drop detect voltage input pin.
	extD	74	—	—	—	—	—	Input	**LVD power supply rise detect voltage input:** This is the LVD power supply rise detect voltage input pin.

Notes:
1. Pad number for HCD64338024, HCD64338023, HCD64338022, HCD64338021, and HCD64338020.
2. Pad number for HCD64F38024 and HCD64F38024R.
3. Pad number for HCD64338024S, HCD64338023S, HCD64338022S, HCD64338021S, and HCD64338020S.
4. H8/38124 Group only
5. Does not apply to H8/38124 Group.

Section 2 CPU

2.1 Overview

The H8/300L CPU has sixteen 8-bit general registers, which can also be paired as eight 16-bit registers. Its concise instruction set is designed for high-speed operation.

2.1.1 Features

Features of the H8/300L CPU are listed below.

- General-register architecture
  Sixteen 8-bit general registers, also usable as eight 16-bit general registers
- Instruction set with 55 basic instructions, including:
  — Multiply and divide instructions
  — Powerful bit-manipulation instructions
- Eight addressing modes
  — Register direct
  — Register indirect
  — Register indirect with displacement
  — Register indirect with post-increment or pre-decrement
  — Absolute address
  — Immediate
  — Program-counter relative
  — Memory indirect
- 64-Kbyte address space
- High-speed operation
  — All frequently used instructions are executed in two to four states
  — High-speed arithmetic and logic operations
  — 8- or 16-bit register-register add or subtract: 0.25 μs*
  — 8 × 8-bit multiply: 1.75 μs*
  — 16 ÷ 8-bit divide: 1.75 μs*
  Note: * These values are at ϕ = 8 MHz.
- Low-power operation modes
  SLEEP instruction for transfer to low-power operation

2.1.2 Address Space

The H8/300L CPU supports an address space of up to 64 Kbytes for storing program code and data.

See section 2.8, Memory Map, for details of the memory map.

2.1.3 Register Configuration

Figure 2.1 shows the register structure of the H8/300L CPU. There are two groups of registers: the general registers and control registers.

General registers (Rn)

7 … 0	7 … 0
R0H	R0L
R1H	R1L
R2H	R2L
R3H	R3L
R4H	R4L
R5H	R5L
R6H	R6L
R7H (SP)	R7L

Control registers (CR)

15 … 0
PC

	7	6	5	4	3	2	1	0
CCR	I	U	H	U	N	Z	V	C

[Legend]
SP: Stack pointer
PC: Program counter
CCR: Condition code register
I: Interrupt mask bit
U: User bit
H: Half-carry flag
N: Negative flag
Z: Zero flag
V: Overflow flag
C: Carry flag

Figure 2.1 CPU Registers

2.2 Register Descriptions

2.2.1 General Registers

All the general registers can be used as both data registers and address registers.

When used as data registers, they can be accessed as 16-bit registers (R0 to R7), or the high bytes (R0H to R7H) and low bytes (R0L to R7L) can be accessed separately as 8-bit registers.

When used as address registers, the general registers are accessed as 16-bit registers (R0 to R7).

R7 also functions as the stack pointer (SP), used implicitly by hardware in exception processing and subroutine calls. When it functions as the stack pointer, as indicated in figure 2.2, SP (R7) points to the top of the stack.

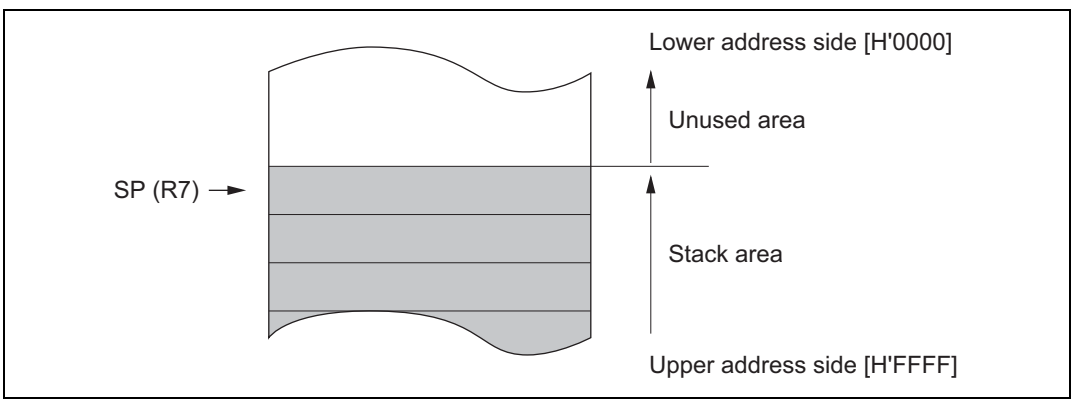

Figure 2.2 Stack Pointer

2.2.2 Control Registers

The CPU control registers include a 16-bit program counter (PC) and an 8-bit condition code register (CCR).

Program Counter (PC)

This 16-bit register indicates the address of the next instruction the CPU will execute. All instructions are fetched 16 bits (1 word) at a time, so the least significant bit of the PC is ignored (always regarded as 0).

Condition Code Register (CCR)

This 8-bit register contains internal status information, including the interrupt mask bit (I) and half-carry (H), negative (N), zero (Z), overflow (V), and carry (C) flags. These bits can be read and written by software (using the LDC, STC, ANDC, ORC, and XORC instructions). The N, Z, V, and C flags are used as branching conditions for conditional branching (Bcc) instructions.

Bit 7—Interrupt Mask Bit (I): When this bit is set to 1, interrupts are masked. This bit is set to 1 automatically at the start of exception handling. The interrupt mask bit may be read and written by software. For further details, see section 3.3, Interrupts.

Bit 6—User Bit (U): Can be used freely by the user.

Bit 5—Half-Carry Flag (H): When the ADD.B, ADDX.B, SUB.B, SUBX.B, CMP.B, or NEG.B instruction is executed, this flag is set to 1 if there is a carry or borrow at bit 3, and is cleared to 0 otherwise.

The H flag is used implicitly by the DAA and DAS instructions.

When the ADD.W, SUB.W, or CMP.W instruction is executed, the H flag is set to 1 if there is a carry or borrow at bit 11, and is cleared to 0 otherwise.

Bit 4—User Bit (U): Can be used freely by the user.

Bit 3—Negative Flag (N): Indicates the most significant bit (sign bit) of the result of an instruction.

Bit 2—Zero Flag (Z): Set to 1 to indicate a zero result, and cleared to 0 to indicate a non-zero result.

Bit 1—Overflow Flag (V): Set to 1 when an arithmetic overflow occurs, and cleared to 0 at other times.

Bit 0—Carry Flag (C): Set to 1 when a carry occurs, and cleared to 0 otherwise. Used by:

- Add instructions, to indicate a carry
- Subtract instructions, to indicate a borrow
- Shift and rotate instructions, to store the value shifted out of the end bit

The carry flag is also used as a bit accumulator by bit manipulation instructions.

Some instructions leave some or all of the flag bits unchanged.

Refer to the H8/300L Series Software Manual for the action of each instruction on the flag bits.

2.2.3 Initial Register Values

When the CPU is reset, the program counter (PC) is initialized to the value stored at address H'0000 in the vector table, and the I bit in the CCR is set to 1. The other CCR bits and the general registers are not initialized. In particular, the stack pointer (R7) is not initialized. The stack pointer should be initialized by software, by the first instruction executed after a reset.

2.3 Data Formats

The H8/300L CPU can process 1-bit data, 4-bit (BCD) data, 8-bit (byte) data, and 16-bit (word) data.

- Bit manipulation instructions operate on 1-bit data specified as bit n in a byte operand (n = 0, 1, 2, ..., 7).
- All arithmetic and logic instructions except ADDS and SUBS can operate on byte data.
- The MOV.W, ADD.W, SUB.W, CMP.W, ADDS, SUBS, MULXU (8 bits × 8 bits), and DIVXU (16 bits ÷ 8 bits) instructions operate on word data.
- The DAA and DAS instructions perform decimal arithmetic adjustments on byte data in packed BCD form. Each nibble of the byte is treated as a decimal digit.

2.3.1 Data Formats in General Registers

Data of all the sizes above can be stored in general registers as shown in figure 2.3.

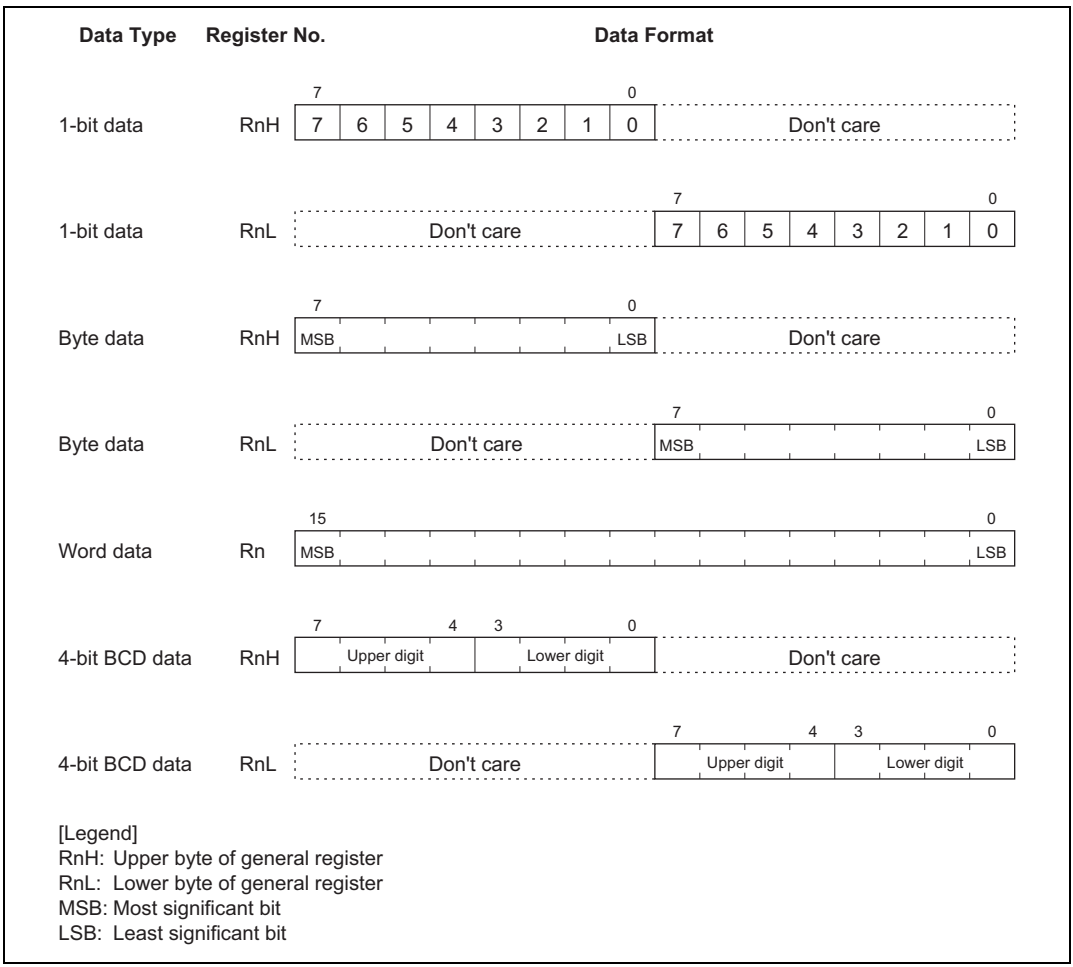

Figure 2.3 Register Data Formats

2.3.2 Memory Data Formats

Figure 2.4 indicates the data formats in memory. The H8/300L CPU can access word data stored in memory (MOV.W instruction), but the word data must always begin at an even address. If word data starting at an odd address is accessed, the least significant bit of the address is regarded as 0, and the word data starting at the preceding address is accessed. The same applies to instruction codes.

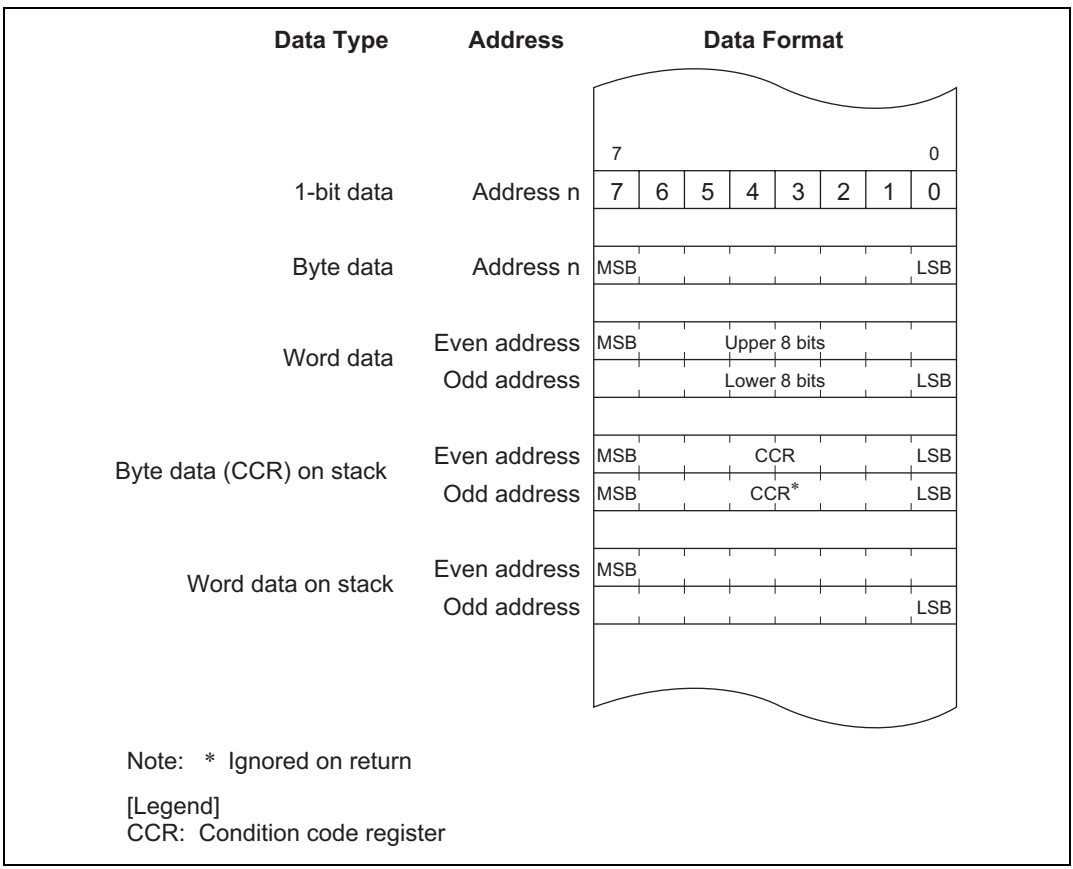

Figure 2.4 Memory Data Formats

When the stack is accessed using R7 as an address register, word access should always be performed. When the CCR is pushed on the stack, two identical copies of the CCR are pushed to make a complete word. When they are restored, the lower byte is ignored.

2.4 Addressing Modes

2.4.1 Addressing Modes

The H8/300L CPU supports the eight addressing modes listed in table 2.1. Each instruction uses a subset of these addressing modes.

Table 2.1 Addressing Modes

No.	Address Modes	Symbol
1	Register direct	Rn
2	Register indirect	@Rn
3	Register indirect with displacement	@(d:16, Rn)
4	Register indirect with post-increment Register indirect with pre-decrement	@Rn+ @–Rn
5	Absolute address	@aa:8 or @aa:16
6	Immediate	#xx:8 or #xx:16
7	Program-counter relative	@(d:8, PC)
8	Memory indirect	@@aa:8

Register Direct—Rn: The register field of the instruction specifies an 8- or 16-bit general register containing the operand.

Only the MOV.W, ADD.W, SUB.W, CMP.W, ADDS, SUBS, MULXU (8 bits × 8 bits), and DIVXU (16 bits ÷ 8 bits) instructions have 16-bit operands.

Register Indirect—@Rn: The register field of the instruction specifies a 16-bit general register containing the address of the operand in memory.

Register Indirect with Displacement—@(d:16, Rn): The instruction has a second word (bytes 3 and 4) containing a displacement which is added to the contents of the specified general register to obtain the operand address in memory.

This mode is used only in MOV instructions. For the MOV.W instruction, the resulting address must be even.

Register Indirect with Post-Increment or Pre-Decrement—@Rn+ or @–Rn:

- Register indirect with post-increment—@Rn+

  The @Rn+ mode is used with MOV instructions that load registers from memory.

  The register field of the instruction specifies a 16-bit general register containing the address of the operand. After the operand is accessed, the register is incremented by 1 for MOV.B or 2 for MOV.W. For MOV.W, the original contents of the 16-bit general register must be even.
- Register indirect with pre-decrement—@–Rn

  The @–Rn mode is used with MOV instructions that store register contents to memory.

  The register field of the instruction specifies a 16-bit general register which is decremented by 1 or 2 to obtain the address of the operand in memory. The register retains the decremented value. The size of the decrement is 1 for MOV.B or 2 for MOV.W. For MOV.W, the original contents of the register must be even.

Absolute Address—@aa:8 or @aa:16: The instruction specifies the absolute address of the operand in memory.

The absolute address may be 8 bits long (@aa:8) or 16 bits long (@aa:16). The MOV.B and bit manipulation instructions can use 8-bit absolute addresses. The MOV.B, MOV.W, JMP, and JSR instructions can use 16-bit absolute addresses.

For an 8-bit absolute address, the upper 8 bits are assumed to be 1 (H'FF). The address range is H'FF00 to H'FFFF (65280 to 65535).

Immediate—#xx:8 or #xx:16: The instruction contains an 8-bit operand (#xx:8) in its second byte, or a 16-bit operand (#xx:16) in its third and fourth bytes. Only MOV.W instructions can contain 16-bit immediate values.

The ADDS and SUBS instructions implicitly contain the value 1 or 2 as immediate data. Some bit manipulation instructions contain 3-bit immediate data in the second or fourth byte of the instruction, specifying a bit number.

Program-Counter Relative—@(d:8, PC): This mode is used in the Bcc and BSR instructions. An 8-bit displacement in byte 2 of the instruction code is sign-extended to 16 bits and added to the program counter contents to generate a branch destination address. The possible branching range is –126 to +128 bytes (–63 to +64 words) from the current address. The displacement should be an even number.

Memory Indirect—@@aa:8: This mode can be used by the JMP and JSR instructions. The second byte of the instruction code specifies an 8-bit absolute address. The word located at this address contains the branch destination address.

The upper 8 bits of the absolute address are assumed to be 0 (H'00), so the address range is from H'0000 to H'00FF (0 to 255). Note that with the H8/300L Series, the lower end of the address area is also used as a vector area. See section 3.3, Interrupts, for details on the vector area.

If an odd address is specified as a branch destination or as the operand address of a MOV.W instruction, the least significant bit is regarded as 0, causing word access to be performed at the address preceding the specified address. See section 2.3.2, Memory Data Formats, for further information.

2.4.2 Effective Address Calculation

Table 2.2 shows how effective addresses are calculated in each of the addressing modes.

Arithmetic and logic instructions use register direct addressing (1). The ADD.B, ADDX, SUBX, CMP.B, AND, OR, and XOR instructions can also use immediate addressing (6).

Data transfer instructions can use all addressing modes except program-counter relative (7) and memory indirect (8).

Bit manipulation instructions can use register direct (1), register indirect (2), or 8-bit absolute addressing (5) to specify the operand. Register indirect (1) (BSET, BCLR, BNOT, and BTST instructions) or 3-bit immediate addressing (6) can be used independently to specify a bit position in the operand.

Table 2.2 Effective Address Calculation

No.	Addressing Mode and Instruction Format	Effective Address Calculation Method	Effective Address (EA)
1	Register direct, Rn	Operand is contents of registers indicated by rm/rn	rm / rn
2	Register indirect, @Rn	Contents (16 bits) of register indicated by rm	
3	Register indirect with displacement, @(d:16, Rn)	Contents (16 bits) of register indicated by rm + disp	
4	Register indirect with post-increment, @Rn+	Contents (16 bits) of register indicated by rm + 1 or 2	
	Register indirect with pre-decrement, @–Rn	Contents (16 bits) of register indicated by rm – 1 or 2 (Incremented or decremented by 1 if operand is byte size, and by 2 if word size)	

No.	Addressing Mode and Instruction Format	Effective Address Calculation Method	Effective Address (EA)
5	Absolute address @aa:8 15 op 8 7 abs 0	H'FF 15 8 7 0	
	@aa:16 15 op 0 abs	15 0	
6	Immediate #xx:8 15 op 8 7 IMM 0	Operand is 1- or 2-byte immediate data	
	#xx:16 15 op 0 IMM		
7	Program-counter relative @(d:8, PC) 15 op 8 7 disp 0	15 PC contents 0 Sign extension disp 15 0	

No.	Addressing Mode and Instruction Format	Effective Address Calculation Method	Effective Address (EA)
8	Memory indirect, @@aa:8		

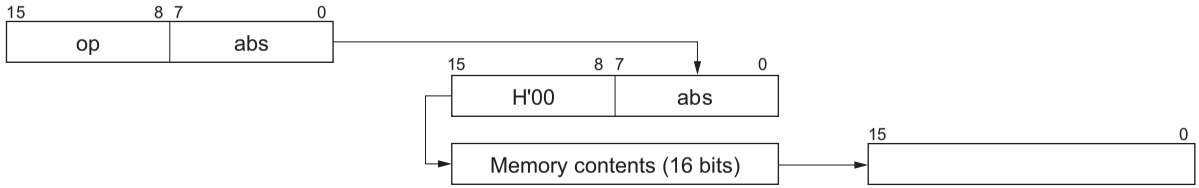

[Legend]
rm, rn: Register field
op: Operation field
disp: Displacement
IMM: Immediate data
abs: Absolute address

2.5 Instruction Set

The H8/300L Series can use a total of 55 instructions, which are grouped by function in table 2.3.

Table 2.3 Instruction Set

Function	Instructions	Number
Data transfer	MOV, PUSH*1, POP*1	1
Arithmetic operations	ADD, SUB, ADDX, SUBX, INC, DEC, ADDS, SUBS, DAA, DAS, MULXU, DIVXU, CMP, NEG	14
Logic operations	AND, OR, XOR, NOT	4
Shift	SHAL, SHAR, SHLL, SHLR, ROTL, ROTR, ROTXL, ROTXR	8
Bit manipulation	BSET, BCLR, BNOT, BTST, BAND, BIAND, BOR, BIOR, BXOR, BIXOR, BLD, BILD, BST, BIST	14
Branch	Bcc*2, JMP, BSR, JSR, RTS	5
System control	RTE, SLEEP, LDC, STC, ANDC, ORC, XORC, NOP	8
Block data transfer	EEPMOV	1
		Total: 55

Notes: 1. PUSH Rn is equivalent to MOV.W Rn, @–SP.
POP Rn is equivalent to MOV.W @SP+, Rn. The same applies to the machine language.
2. Bcc is a conditional branch instruction in which cc represents a condition code.

The following sections give a concise summary of the instructions in each category, and indicate the bit patterns of their object code. The notation used is defined next.

Notation

Rd	General register (destination)
Rs	General register (source)
Rn	General register
(EAd), <EAd>	Destination operand
(EAs), <EAs>	Source operand
CCR	Condition code register
N	N (negative) flag of CCR
Z	Z (zero) flag of CCR
V	V (overflow) flag of CCR
C	C (carry) flag of CCR
PC	Program counter
SP	Stack pointer
#IMM	Immediate data
disp	Displacement
+	Addition
–	Subtraction
×	Multiplication
÷	Division
∧	AND logical
∨	OR logical
⊕	Exclusive OR logical
→	Move
~	Logical negation (logical complement)
:3	3-bit length
:8	8-bit length
:16	16-bit length
( ), < >	Contents of operand indicated by effective address

2.5.1 Data Transfer Instructions

Table 2.4 describes the data transfer instructions. Figure 2.5 shows their object code formats.

Table 2.4 Data Transfer Instructions

Instruction	Size*	Function
MOV	B/W	(EAs) → Rd, Rs → (EAd) Moves data between two general registers or between a general register and memory, or moves immediate data to a general register. The Rn, @Rn, @(d:16, Rn), @aa:16, #xx:16, @–Rn, and @Rn+ addressing modes are available for word data. The @aa:8 addressing mode is available for byte data only. The @–R7 and @R7+ modes require word operands. Do not specify byte size for these two modes.
POP	W	@SP+ → Rn Pops a 16-bit general register from the stack. Equivalent to MOV.W @SP+, Rn.
PUSH	W	Rn → @–SP Pushes a 16-bit general register onto the stack. Equivalent to MOV.W Rn, @–SP.

Note: * Size: Operand size
B: Byte
W: Word

Certain precautions are required in data access. See section 2.9.1, Notes on Data Access, for details.

Figure 2.7 lists the format of the bit manipulation instructions.

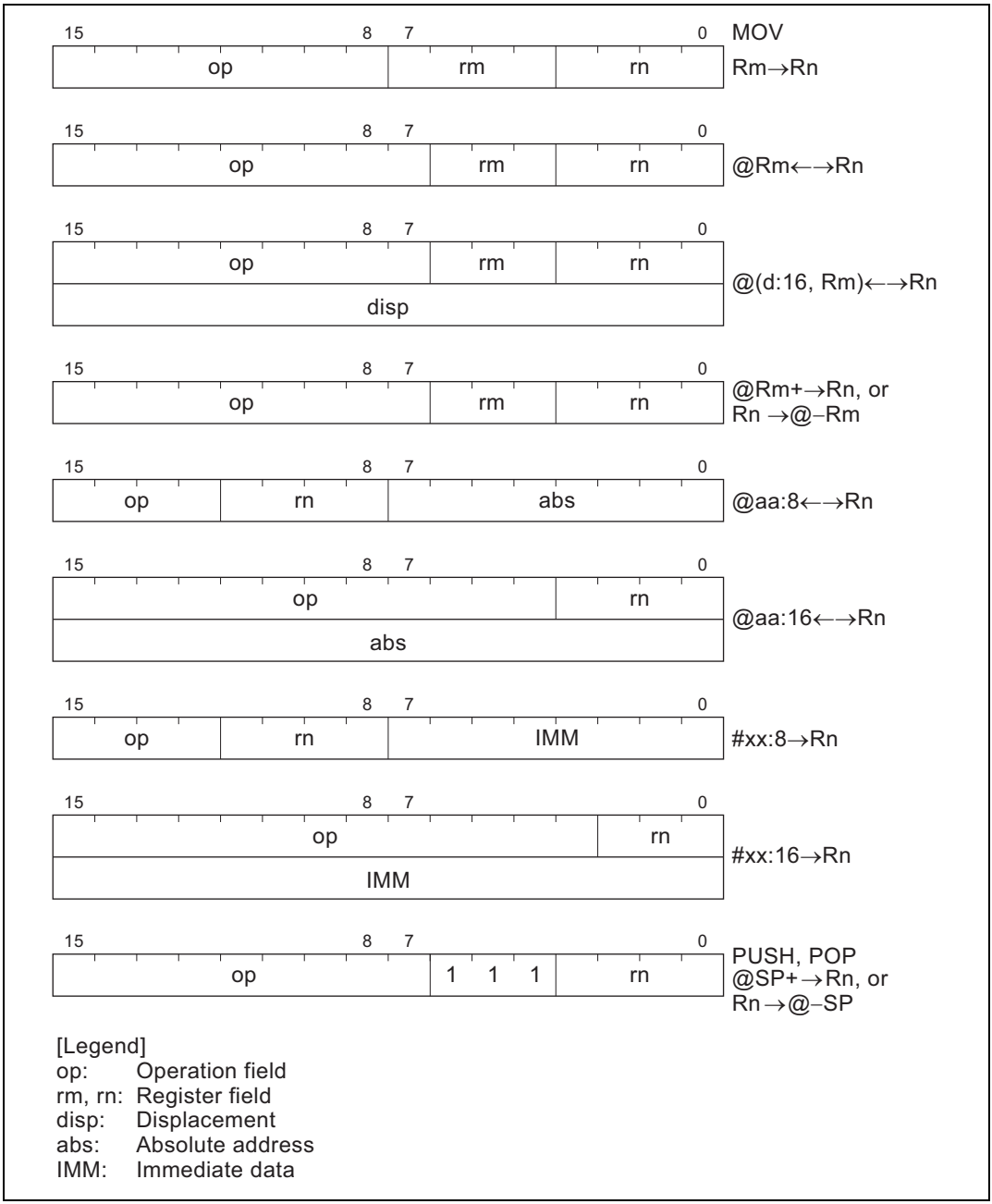

Figure 2.5 Data Transfer Instruction Codes

2.5.2 Arithmetic Operations

Table 2.5 describes the arithmetic instructions.

Table 2.5 Arithmetic Instructions

Instruction	Size*	Function
ADD SUB	B/W	Rd ± Rs → Rd, Rd + #IMM → Rd Performs addition or subtraction on data in two general registers, or addition on immediate data and data in a general register. Immediate data cannot be subtracted from data in a general register. Word data can be added or subtracted only when both words are in general registers.
ADDX SUBX	B	Rd ± Rs ± C → Rd, Rd ± #IMM ± C → Rd Performs addition or subtraction with carry or borrow on byte data in two general registers, or addition or subtraction on immediate data and data in a general register.
INC DEC	B	Rd ± 1 → Rd Increments or decrements a general register by 1.
ADDS SUBS	W	Rd ± 1 → Rd, Rd ± 2 → Rd Adds or subtracts 1 or 2 to or from a general register
DAA DAS	B	Rd decimal adjust → Rd Decimal-adjusts (adjusts to 4-bit BCD) an addition or subtraction result in a general register by referring to the CCR
MULXU	B	Rd × Rs → Rd Performs 8-bit × 8-bit unsigned multiplication on data in two general registers, providing a 16-bit result
DIVXU	B	Rd ÷ Rs → Rd Performs 16-bit ÷ 8-bit unsigned division on data in two general registers, providing an 8-bit quotient and 8-bit remainder
CMP	B/W	Rd – Rs, Rd – #IMM Compares data in a general register with data in another general register or with immediate data, and indicates the result in the CCR. Word data can be compared only between two general registers.
NEG	B	0 – Rd → Rd Obtains the two's complement (arithmetic complement) of data in a general register

Note: * Size: Operand size
B: Byte
W: Word

2.5.3 Logic Operations

Table 2.6 describes the four instructions that perform logic operations.

Table 2.6 Logic Operation Instructions

Instruction	Size*	Function
AND	B	Rd ∧ Rs → Rd, Rd ∧ #IMM → Rd Performs a logical AND operation on a general register and another general register or immediate data
OR	B	Rd ∨ Rs → Rd, Rd ∨ #IMM → Rd Performs a logical OR operation on a general register and another general register or immediate data
XOR	B	Rd ⊕ Rs → Rd, Rd ⊕ #IMM → Rd Performs a logical exclusive OR operation on a general register and another general register or immediate data
NOT	B	~ Rd → Rd Obtains the one's complement (logical complement) of general register contents

Note: * Size: Operand size
B: Byte

2.5.4 Shift Operations

Table 2.7 describes the eight shift instructions.

Table 2.7 Shift Instructions

Instruction	Size*	Function
SHAL SHAR	B	Rd shift → Rd Performs an arithmetic shift operation on general register contents
SHLL SHLR	B	Rd shift → Rd Performs a logical shift operation on general register contents
ROTL ROTR	B	Rd rotate → Rd Rotates general register contents
ROTXL ROTXR	B	Rd rotate through carry → Rd Rotates general register contents through the C (carry) bit

Note: * Size: Operand size
B: Byte

Figure 2.6 shows the instruction code format of arithmetic, logic, and shift instructions.

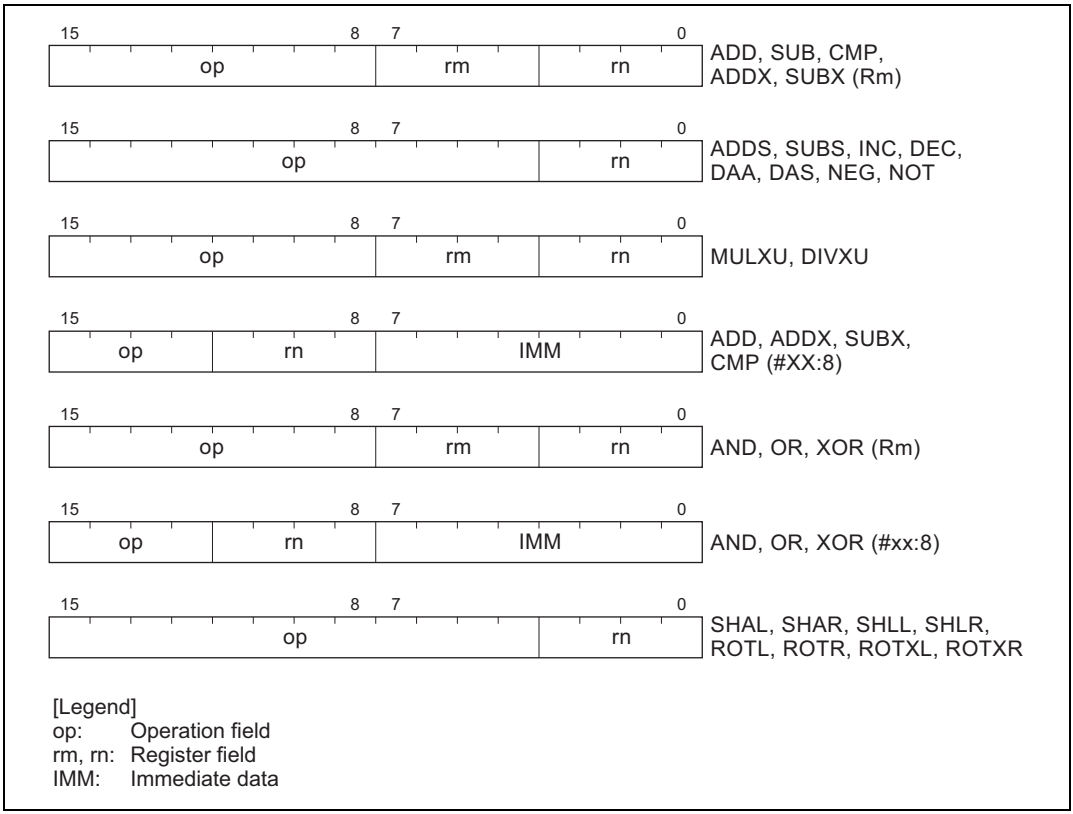

Figure 2.6 Arithmetic, Logic, and Shift Instruction Codes

2.5.5 Bit Manipulations

Table 2.8 describes the bit-manipulation instructions. Figure 2.7 shows their object code formats.

Table 2.8 Bit-Manipulation Instructions

Instruction	Size*	Function
BSET	B	1 → (<bit-No.> of <EAd>) Sets a specified bit in a general register or memory to 1. The bit number is specified by 3-bit immediate data or the lower three bits of a general register.
BCLR	B	0 → (<bit-No.> of <EAd>) Clears a specified bit in a general register or memory to 0. The bit number is specified by 3-bit immediate data or the lower three bits of a general register.
BNOT	B	~ (<bit-No.> of <EAd>) → (<bit-No.> of <EAd>) Inverts a specified bit in a general register or memory. The bit number is specified by 3-bit immediate data or the lower three bits of a general register.
BTST	B	~ (<bit-No.> of <EAd>) → Z Tests a specified bit in a general register or memory and sets or clears the Z flag accordingly. The bit number is specified by 3-bit immediate data or the lower three bits of a general register.
BAND	B	C ∧ (<bit-No.> of <EAd>) → C ANDs the C flag with a specified bit in a general register or memory, and stores the result in the C flag.
BIAND	B	C ∧ [~ (<bit-No.> of <EAd>)] → C ANDs the C flag with the inverse of a specified bit in a general register or memory, and stores the result in the C flag. The bit number is specified by 3-bit immediate data.
BOR	B	C ∨ (<bit-No.> of <EAd>) → C ORs the C flag with a specified bit in a general register or memory, and stores the result in the C flag.
BIOR	B	C ∨ [~ (<bit-No.> of <EAd>)] → C ORs the C flag with the inverse of a specified bit in a general register or memory, and stores the result in the C flag. The bit number is specified by 3-bit immediate data.

Note: * Size: Operand size
B: Byte

Instruction	Size*	Function
BXOR	B	C ⊕ (<bit-No.> of <EAd>) → C XORs the C flag with a specified bit in a general register or memory, and stores the result in the C flag.
BIXOR	B	C ⊕ [~(<bit-No.> of <EAd>)] → C XORs the C flag with the inverse of a specified bit in a general register or memory, and stores the result in the C flag. The bit number is specified by 3-bit immediate data.
BLD	B	(<bit-No.> of <EAd>) → C Copies a specified bit in a general register or memory to the C flag.
BILD	B	~ (<bit-No.> of <EAd>) → C Copies the inverse of a specified bit in a general register or memory to the C flag. The bit number is specified by 3-bit immediate data.
BST	B	C → (<bit-No.> of <EAd>) Copies the C flag to a specified bit in a general register or memory.
BIST	B	~ C → (<bit-No.> of <EAd>) Copies the inverse of the C flag to a specified bit in a general register or memory. The bit number is specified by 3-bit immediate data.

Note: * Size: Operand size
B: Byte

Certain precautions are required in bit manipulation. See section 2.9.2, Notes on Bit Manipulation, for details.

Figure 2.7 lists the format of the bit manipulation instructions.

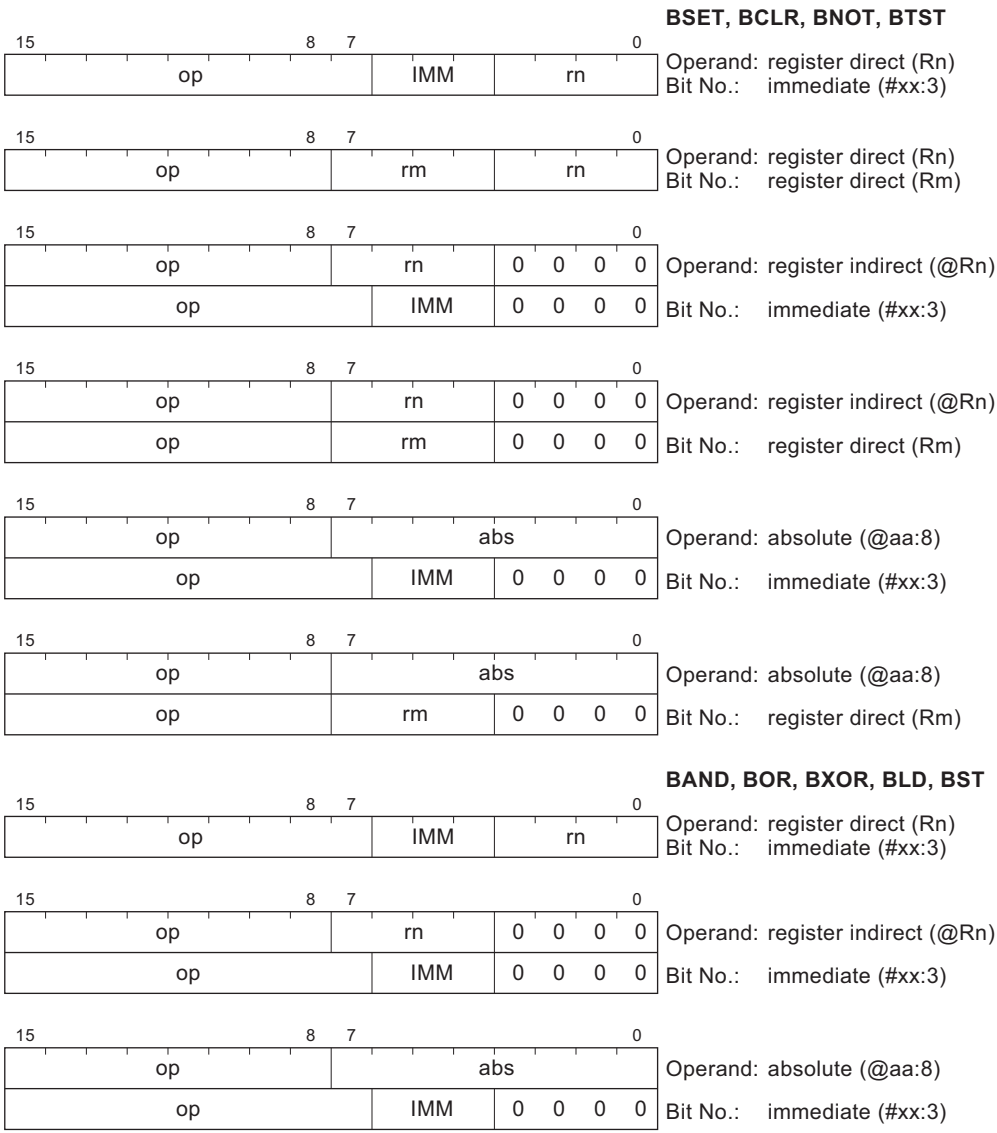

Figure 2.7 Bit Manipulation Instruction Codes

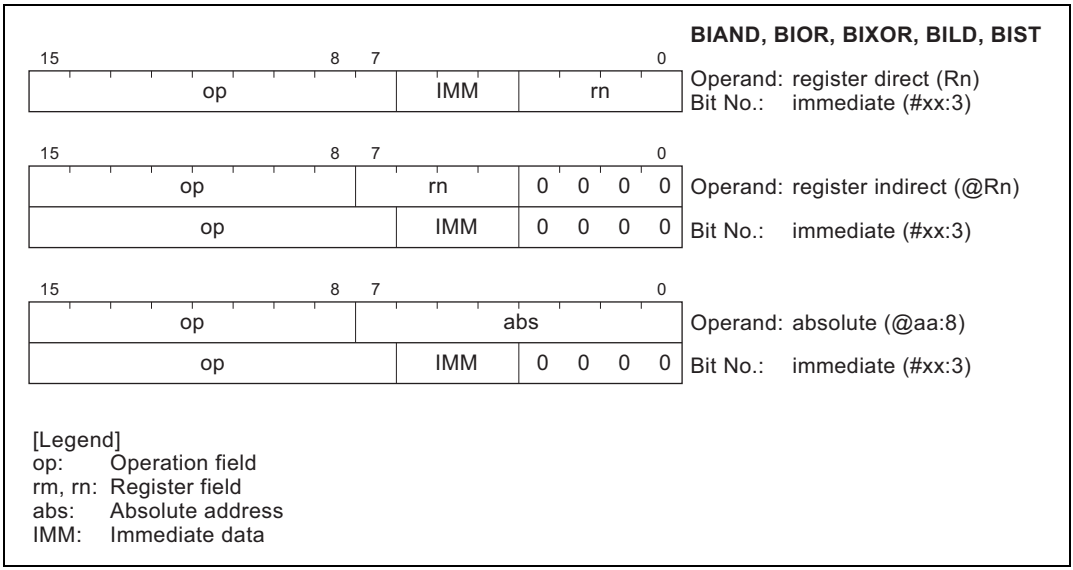

Figure 2.7 Bit Manipulation Instruction Codes (cont)

2.5.6 Branching Instructions

Table 2.9 describes the branching instructions. Figure 2.8 shows their object code formats.

Table 2.9 Branching Instructions

Instruction	Size	Function
Bcc	—	Branches to the designated address if condition cc is true. The branching conditions are given below.

Mnemonic	Description	Condition
BRA (BT)	Always (true)	Always
BRN (BF)	Never (false)	Never
BHI	High	$C \vee Z = 0$
BLS	Low or same	$C \vee Z = 1$
BCC (BHS)	Carry clear (high or same)	$C = 0$
BCS (BLO)	Carry set (low)	$C = 1$
BNE	Not equal	$Z = 0$
BEQ	Equal	$Z = 1$
BVC	Overflow clear	$V = 0$
BVS	Overflow set	$V = 1$
BPL	Plus	$N = 0$
BMI	Minus	$N = 1$
BGE	Greater or equal	$N \oplus V = 0$
BLT	Less than	$N \oplus V = 1$
BGT	Greater than	$Z \vee (N \oplus V) = 0$
BLE	Less or equal	$Z \vee (N \oplus V) = 1$

JMP	—	Branches unconditionally to a specified address
BSR	—	Branches to a subroutine at a specified address
JSR	—	Branches to a subroutine at a specified address
RTS	—	Returns from a subroutine

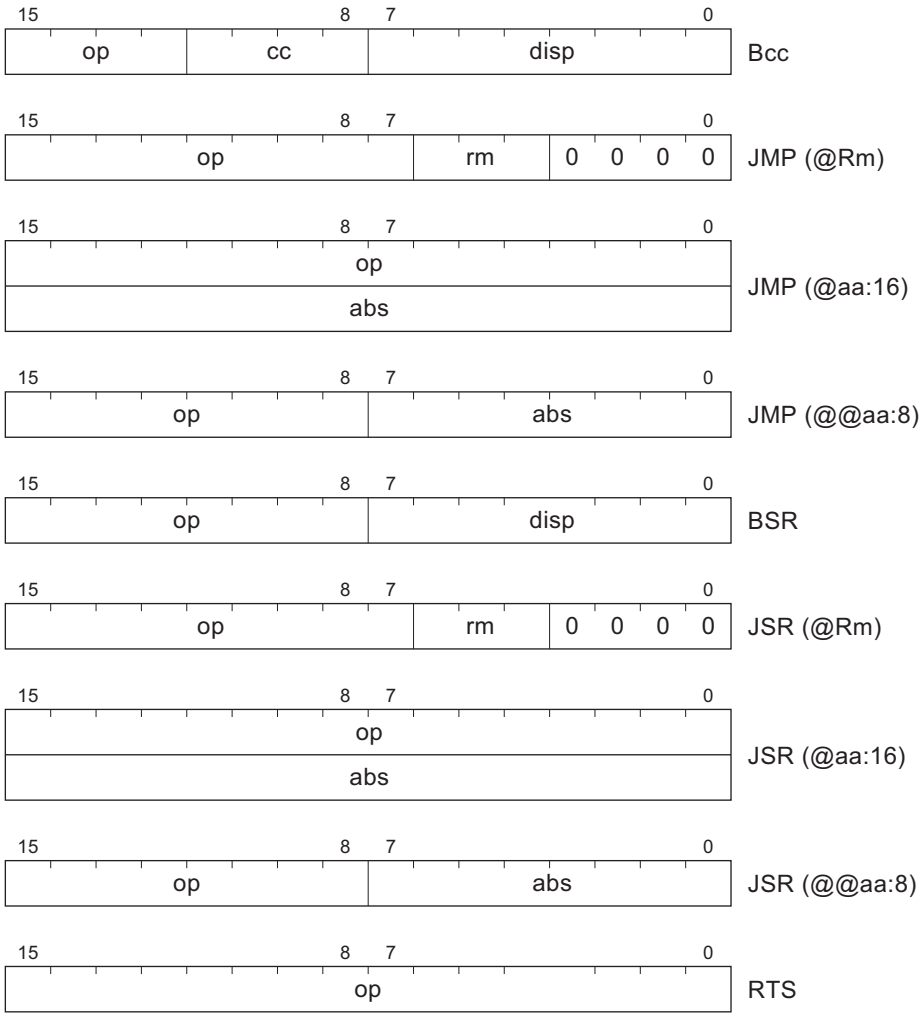

[Legend]
op: Operation field
cc: Condition field
rm: Register field
disp: Displacement
abs: Absolute address

Figure 2.8 Branching Instruction Codes

2.5.7 System Control Instructions

Table 2.10 describes the system control instructions. Figure 2.9 shows their object code formats.

Table 2.10 System Control Instructions

Instruction	Size*	Function
RTE	—	Returns from an exception-handling routine
SLEEP	—	Causes a transition from active mode to a power-down mode. See section 5, Power-Down Modes, for details.
LDC	B	Rs → CCR, #IMM → CCR Moves immediate data or general register contents to the condition code register
STC	B	CCR → Rd Copies the condition code register to a specified general register
ANDC	B	CCR ∧ #IMM → CCR Logically ANDs the condition code register with immediate data
ORC	B	CCR ∨ #IMM → CCR Logically ORs the condition code register with immediate data
XORC	B	CCR ⊕ #IMM → CCR Logically exclusive-ORs the condition code register with immediate data
NOP	—	PC + 2 → PC Only increments the program counter

Note: * Size: Operand size
B: Byte

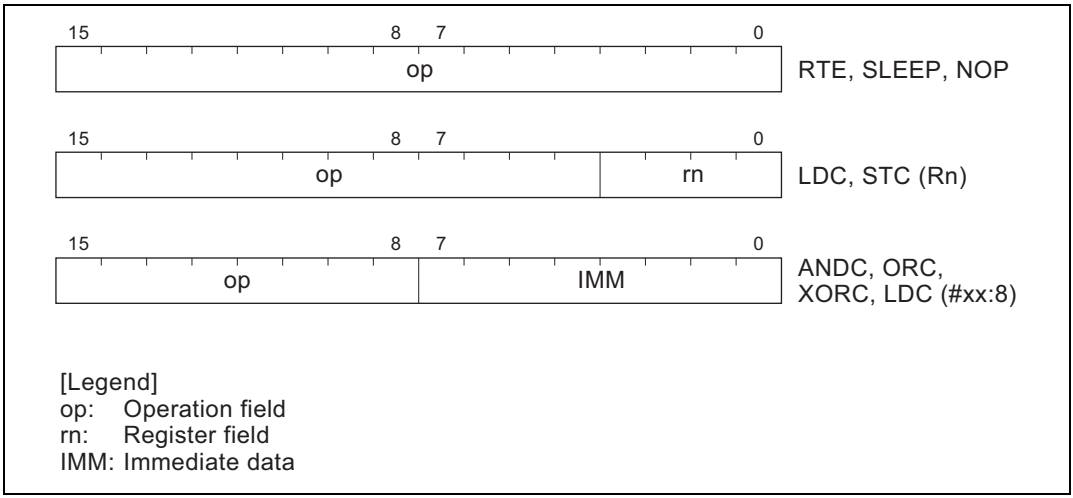

Figure 2.9 System Control Instruction Codes

2.5.8 Block Data Transfer Instruction

Table 2.11 describes the block data transfer instruction. Figure 2.10 shows its object code format.

Table 2.11 Block Data Transfer Instruction

Instruction	Size	Function
EEPMOV	—	If R4L ≠ 0 then repeat @R5+ → @R6+ R4L – 1 → R4L until R4L = 0 else next; Block transfer instruction. Transfers the number of data bytes specified by R4L from locations starting at the address indicated by R5 to locations starting at the address indicated by R6. After the transfer, the next instruction is executed.

Certain precautions are required in using the EEPMOV instruction. See section 2.9.3, Notes on Use of the EEPMOV Instruction, for details.

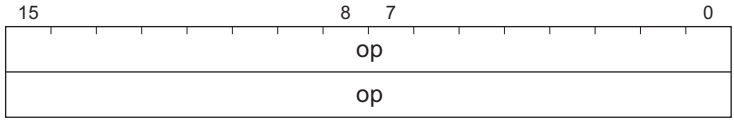

[Legend]
op: Operation field

Figure 2.10 Block Data Transfer Instruction Code

2.6 Basic Operational Timing

CPU operation is synchronized by a system clock (ϕ) or a subclock (ϕ_{SUB}). For details on these clock signals see section 4, Clock Pulse Generators. The period from a rising edge of ϕ or ϕ_{SUB} to the next rising edge is called one state. A bus cycle consists of two states or three states. The cycle differs depending on whether access is to on-chip memory or to on-chip peripheral modules.

2.6.1 Access to On-Chip Memory (RAM, ROM)

Access to on-chip memory takes place in two states. The data bus width is 16 bits, allowing access in byte or word size. Figure 2.11 shows the on-chip memory access cycle.

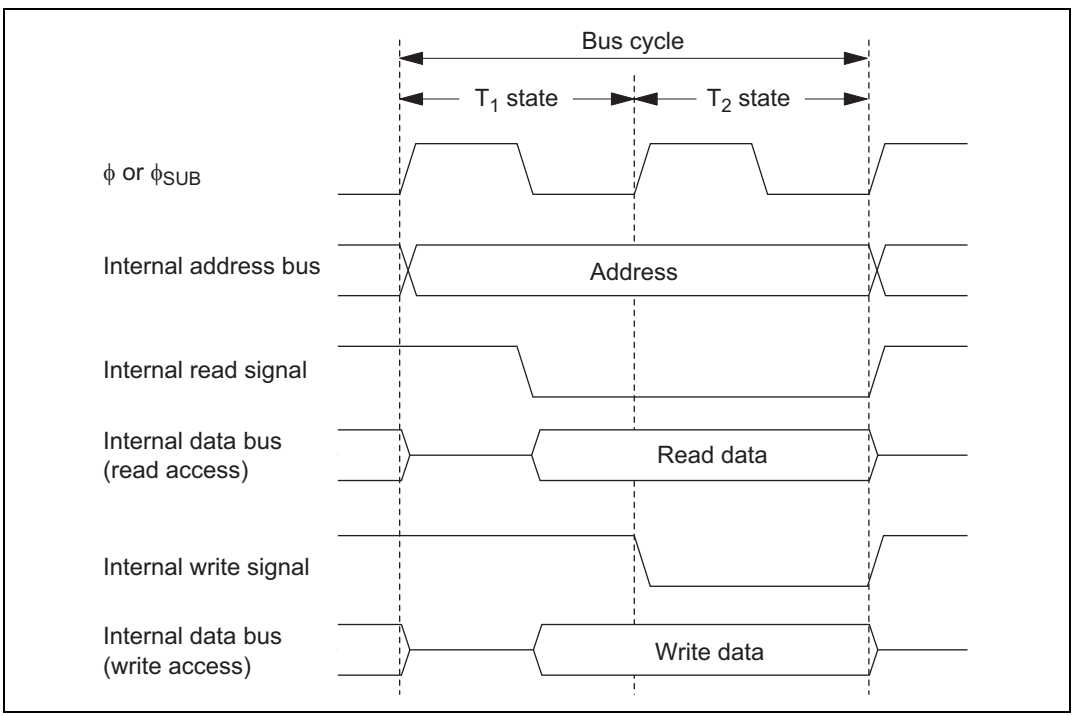

Figure 2.11 On-Chip Memory Access Cycle

2.6.2 Access to On-Chip Peripheral Modules

On-chip peripheral modules are accessed in two states or three states. The data bus width is 8 bits, so access is by byte size only. This means that for accessing word data, two instructions must be used. Figures 2.12 and 2.13 show the on-chip peripheral module access cycle.

Two-state access to on-chip peripheral modules

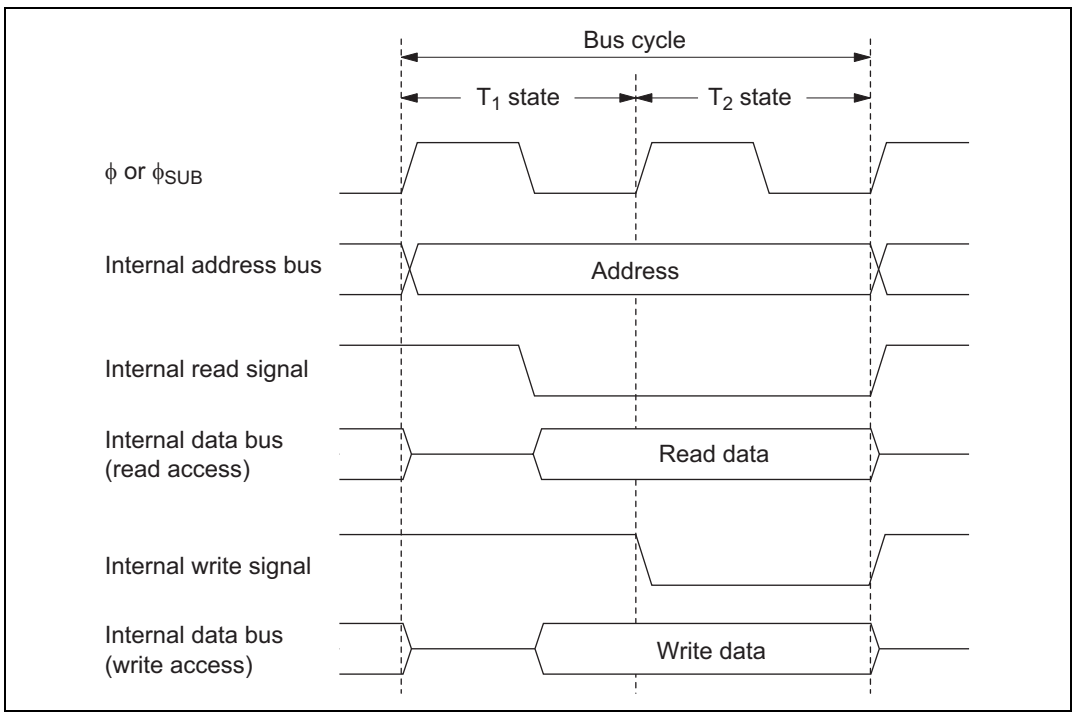

Figure 2.12 On-Chip Peripheral Module Access Cycle (2-State Access)

Three-state access to on-chip peripheral modules

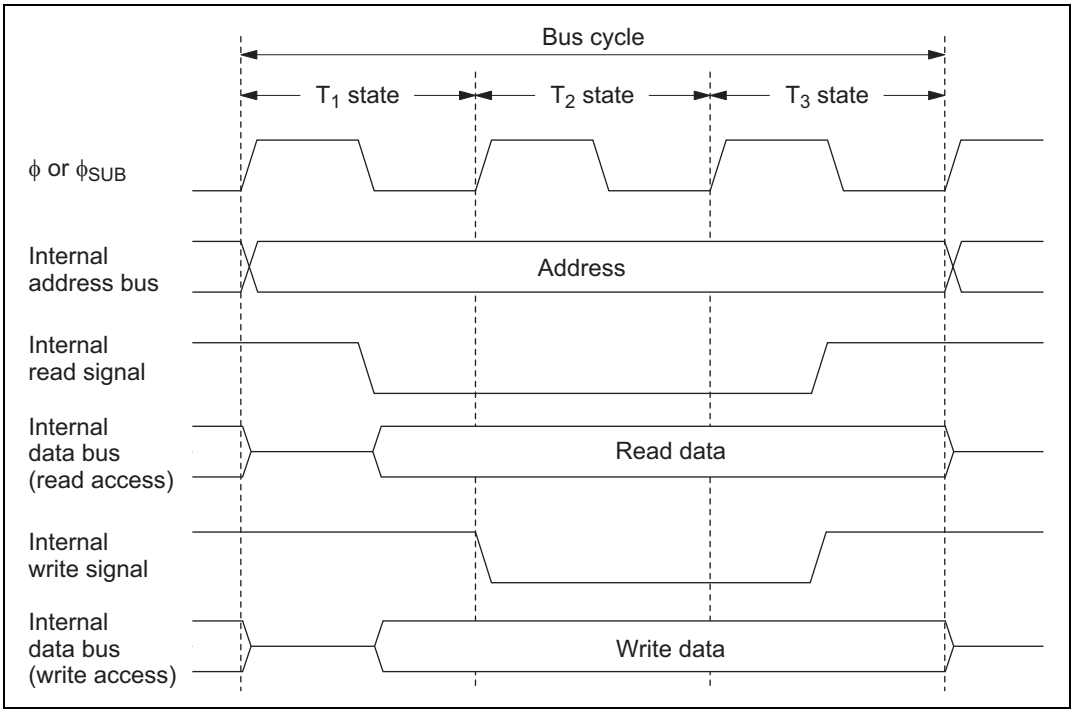

Figure 2.13 On-Chip Peripheral Module Access Cycle (3-State Access)

2.7 CPU States

2.7.1 Overview

There are four CPU states: the reset state, program execution state, program halt state, and exception-handling state. The program execution state includes active (high-speed or medium-speed) mode and subactive mode. In the program halt state there are a sleep (high-speed or medium-speed) mode, standby mode, watch mode, and sub-sleep mode. These states are shown in figure 2.14. Figure 2.15 shows the state transitions.

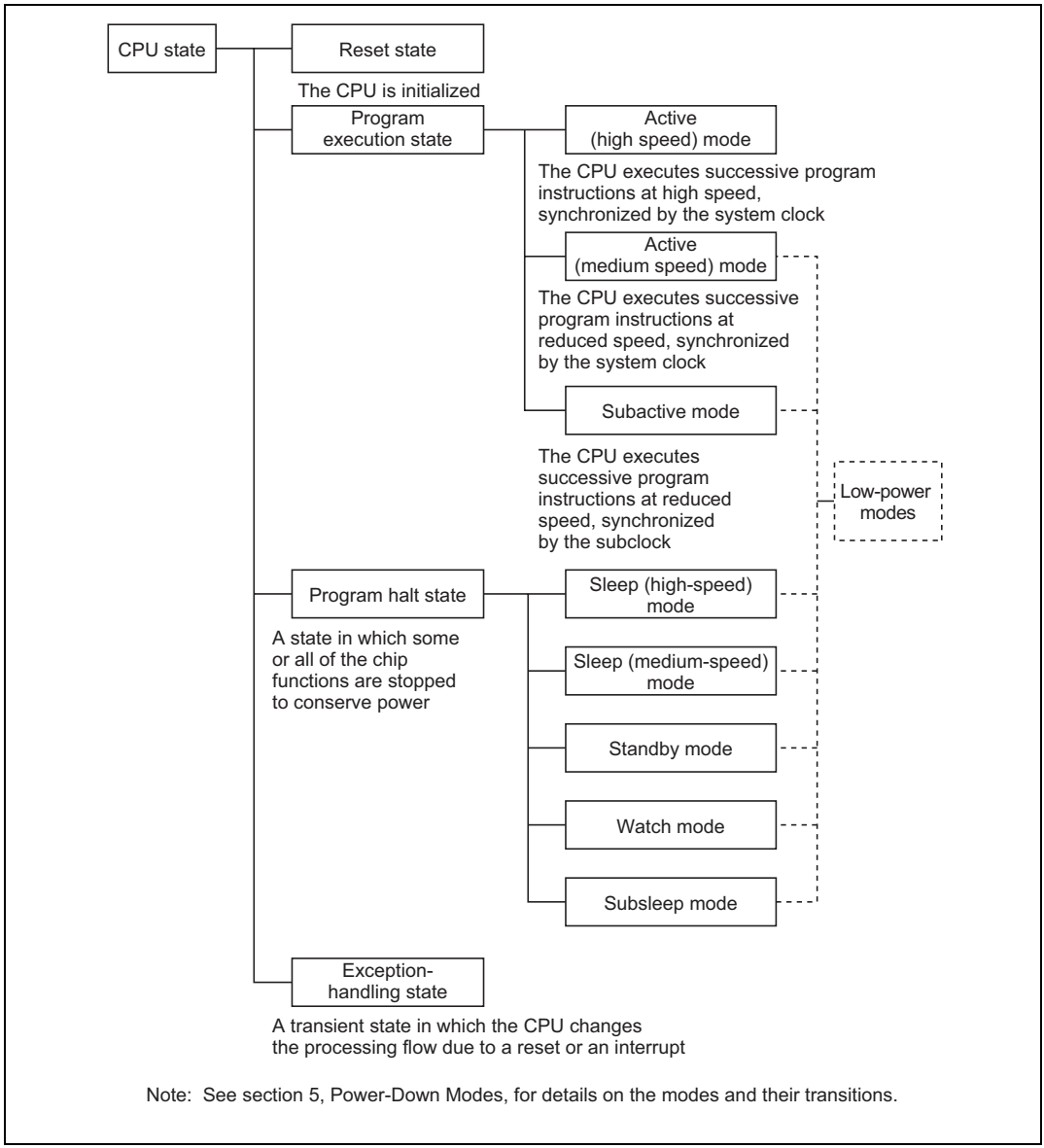

Figure 2.14 CPU Operation States

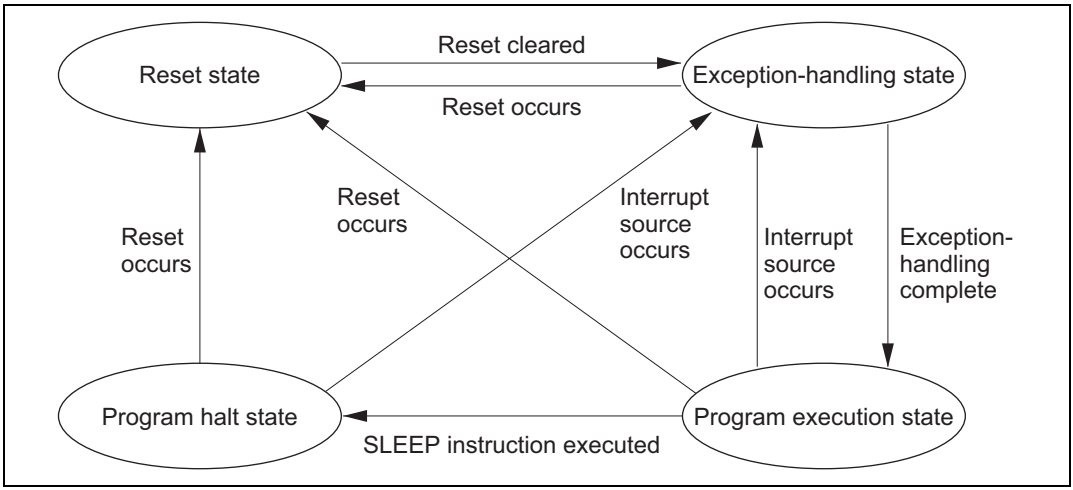

Figure 2.15 State Transitions

2.7.2 Program Execution State

In the program execution state the CPU executes program instructions in sequence.

There are three modes in this state, two active modes (high speed and medium speed) and one subactive mode. Operation is synchronized with the system clock in active mode (high speed and medium speed), and with the subclock in subactive mode. See section 5, Power-Down Modes for details on these modes.

2.7.3 Program Halt State

In the program halt state there are five modes: two sleep modes (high speed and medium speed), standby mode, watch mode, and subsleep mode. See section 5, Power-Down Modes for details on these modes.

2.7.4 Exception-Handling State

The exception-handling state is a transient state occurring when exception handling is started by a reset or interrupt and the CPU changes its normal processing flow. In exception handling caused by an interrupt, SP (R7) is referenced and the PC and CCR values are saved on the stack.

For details on interrupt handling, see section 3.3, Interrupts.

2.8 Memory Map

2.8.1 Memory Map

The memory map of the H8/38024, H8/38024S, and H8/38124 are shown in figure 2.16(1), that of the H8/38023, H8/38023S, and H8/38123 in figure 2.16(2), that of the H8/38022, H8/38022S, and H8/38122 in figure 2.16(3), that of the H8/38021, H8/38021S, and H8/38121 in figure 2.16(4), and that of the H8/38020, H8/38020S, and H8/38120 in figure 2.16(5).

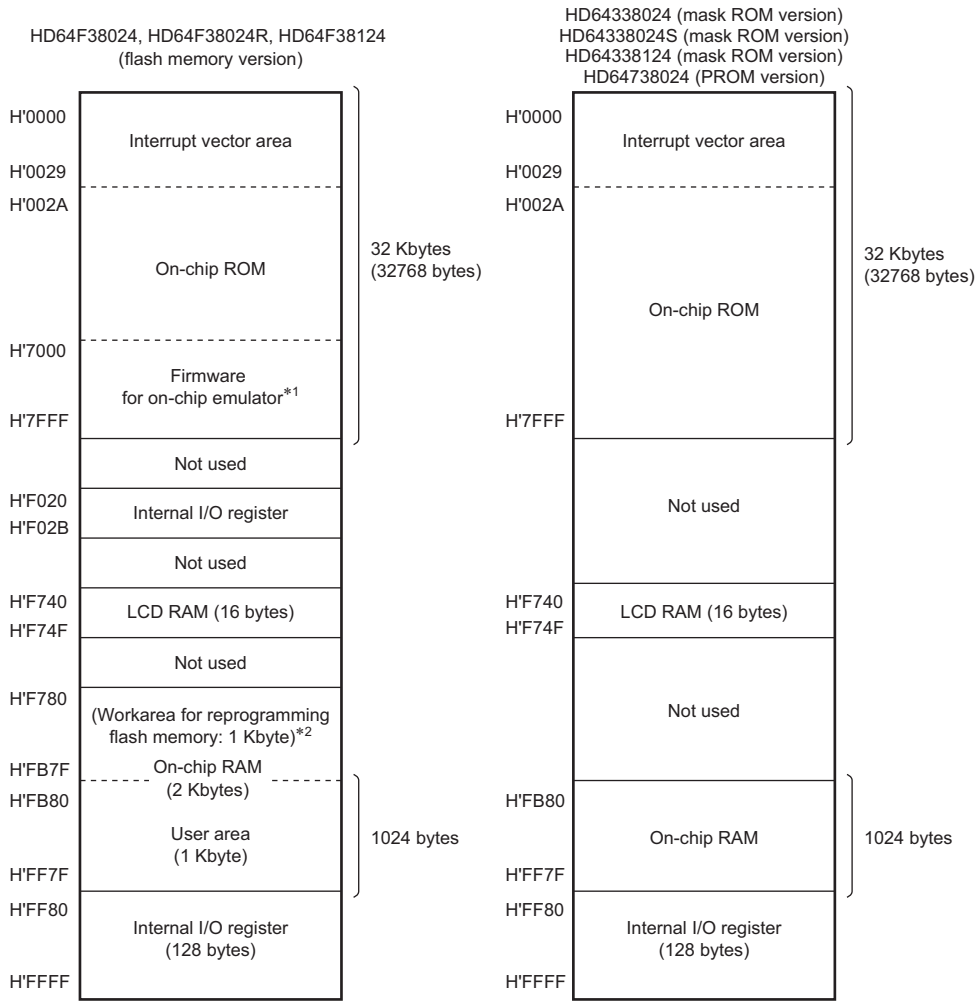

Notes: 1. Not available to the user if the on-chip emulator is used.
2. Used by the programming control program when programming flash memory. Also, not available to the user if the on-chip emulator is used.

Figure 2.16(1) H8/38024, H8/38024S, and H8/38124 Memory Map

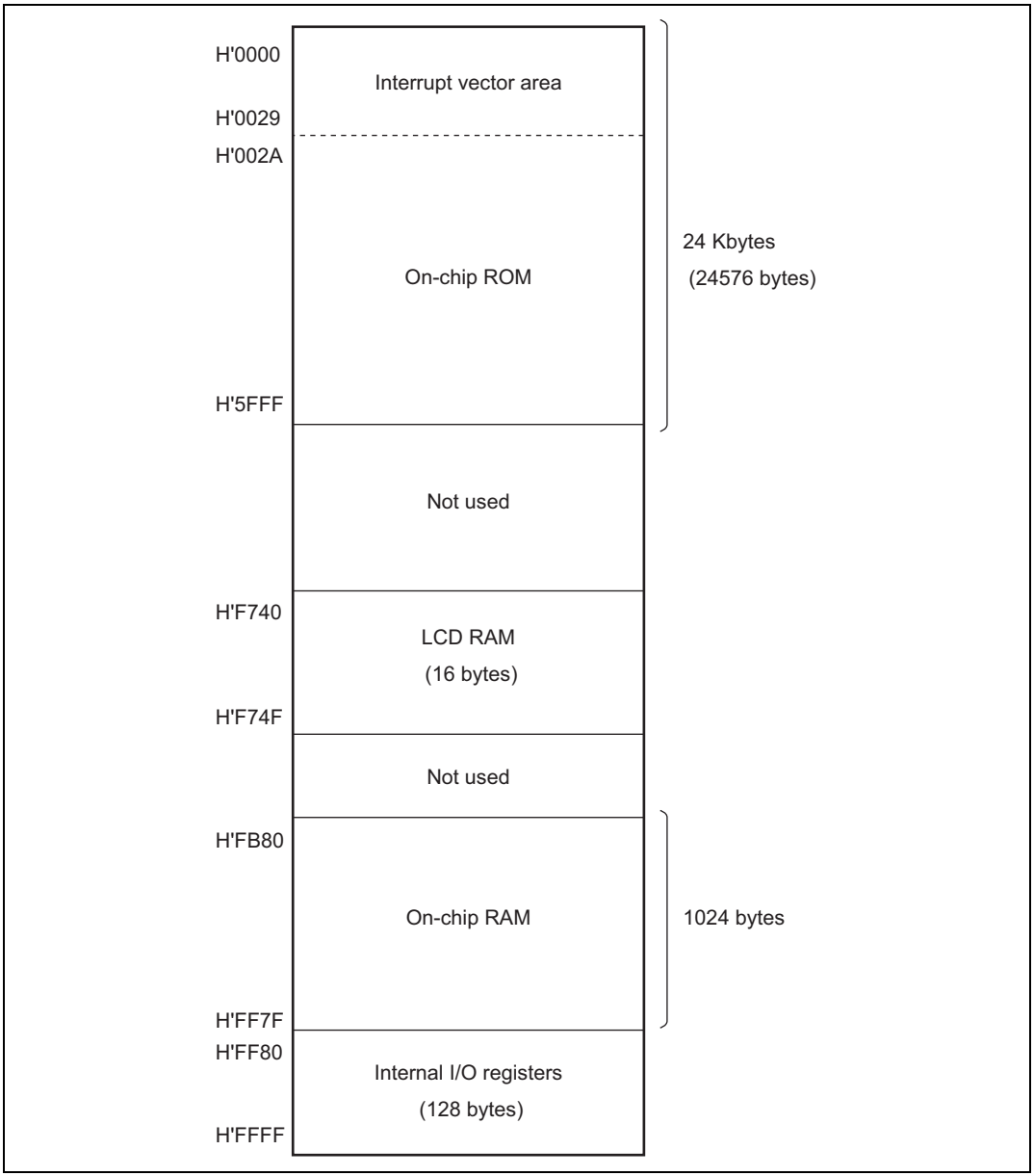

Figure 2.16(2) H8/38023, H8/38023S, and H8/38123 Memory Map

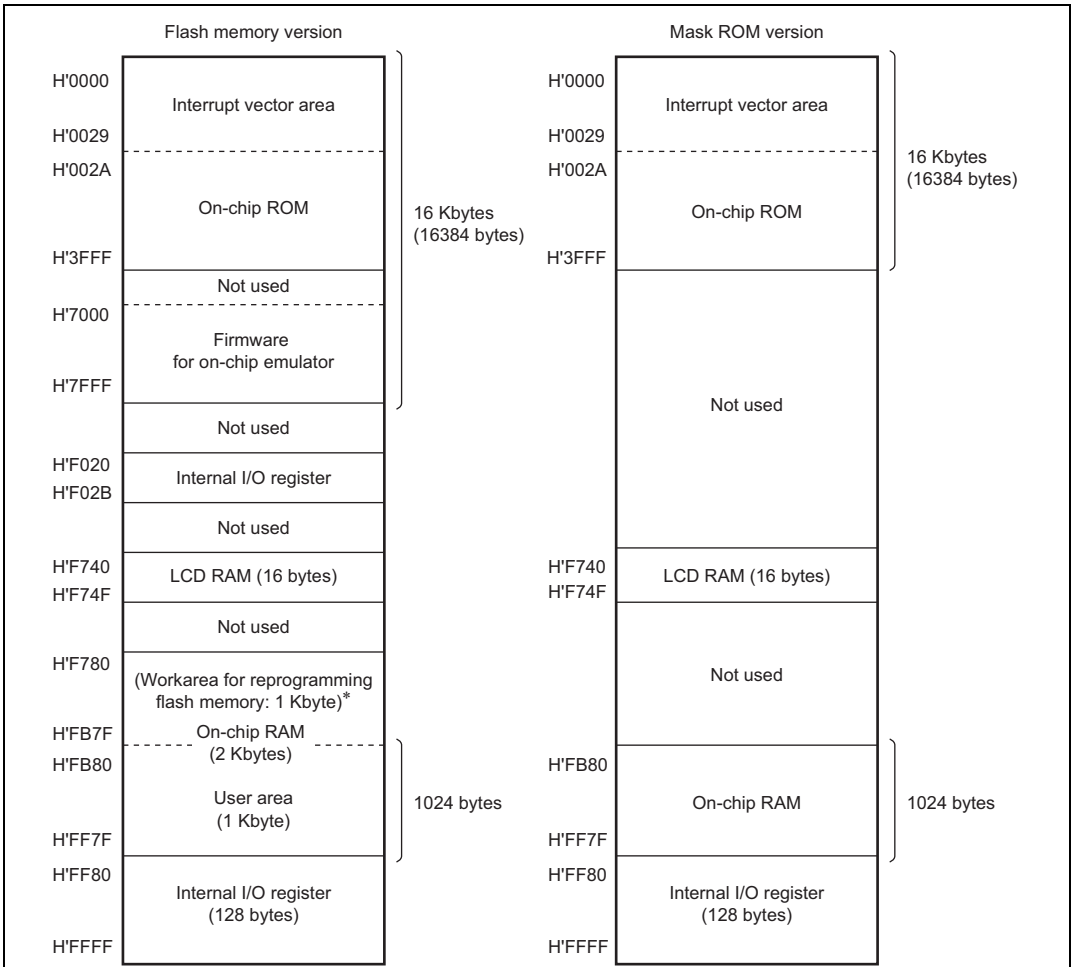

Note: * Used by the programming control program when programming flash memory. Also, not available to the user if the on-chip emulator is used.

Figure 2.16(3) H8/38022, H8/38022S, and H8/38122 Memory Map

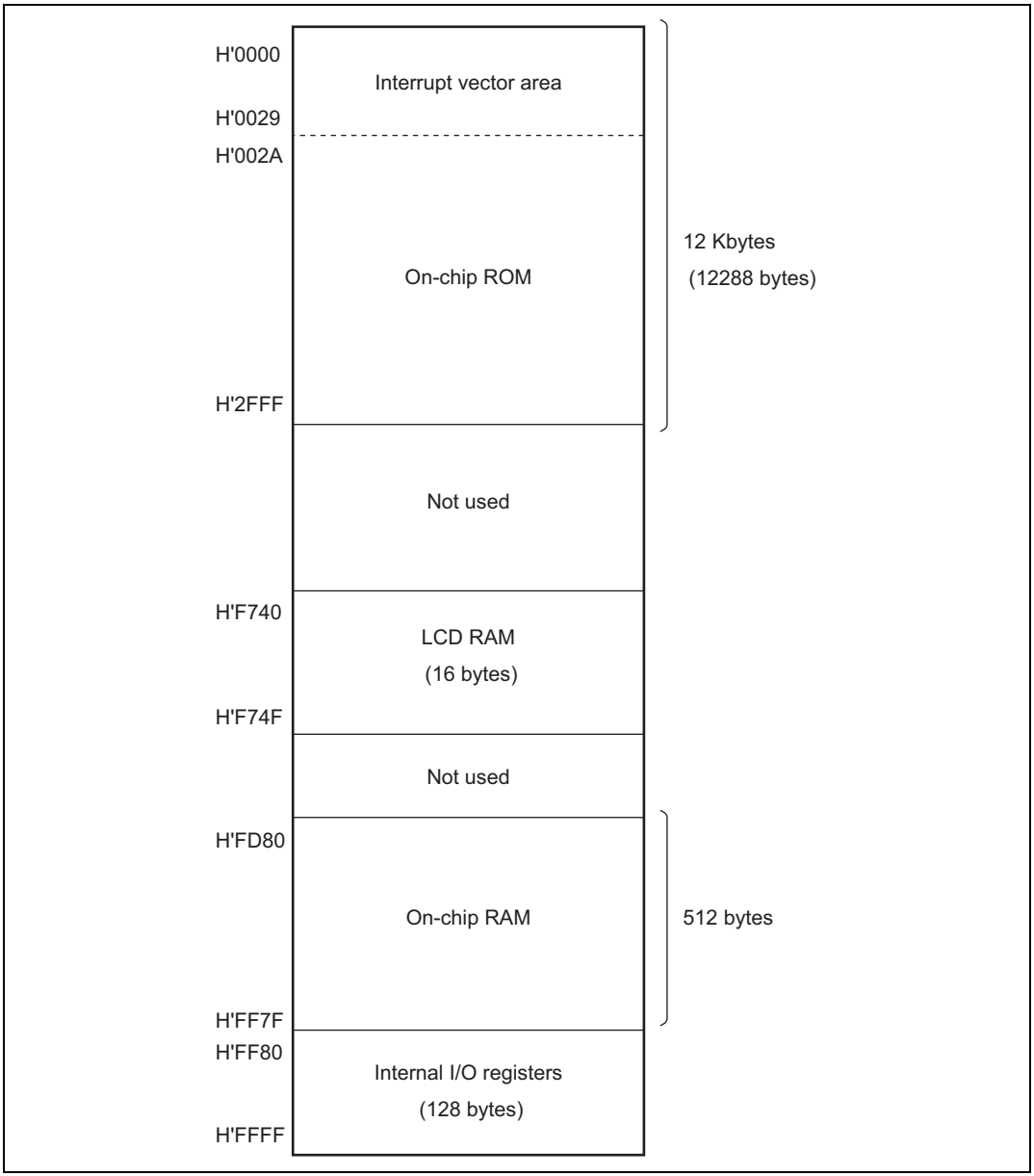

Figure 2.16(4) H8/38021, H8/38021S, and H8/38121 Memory Map

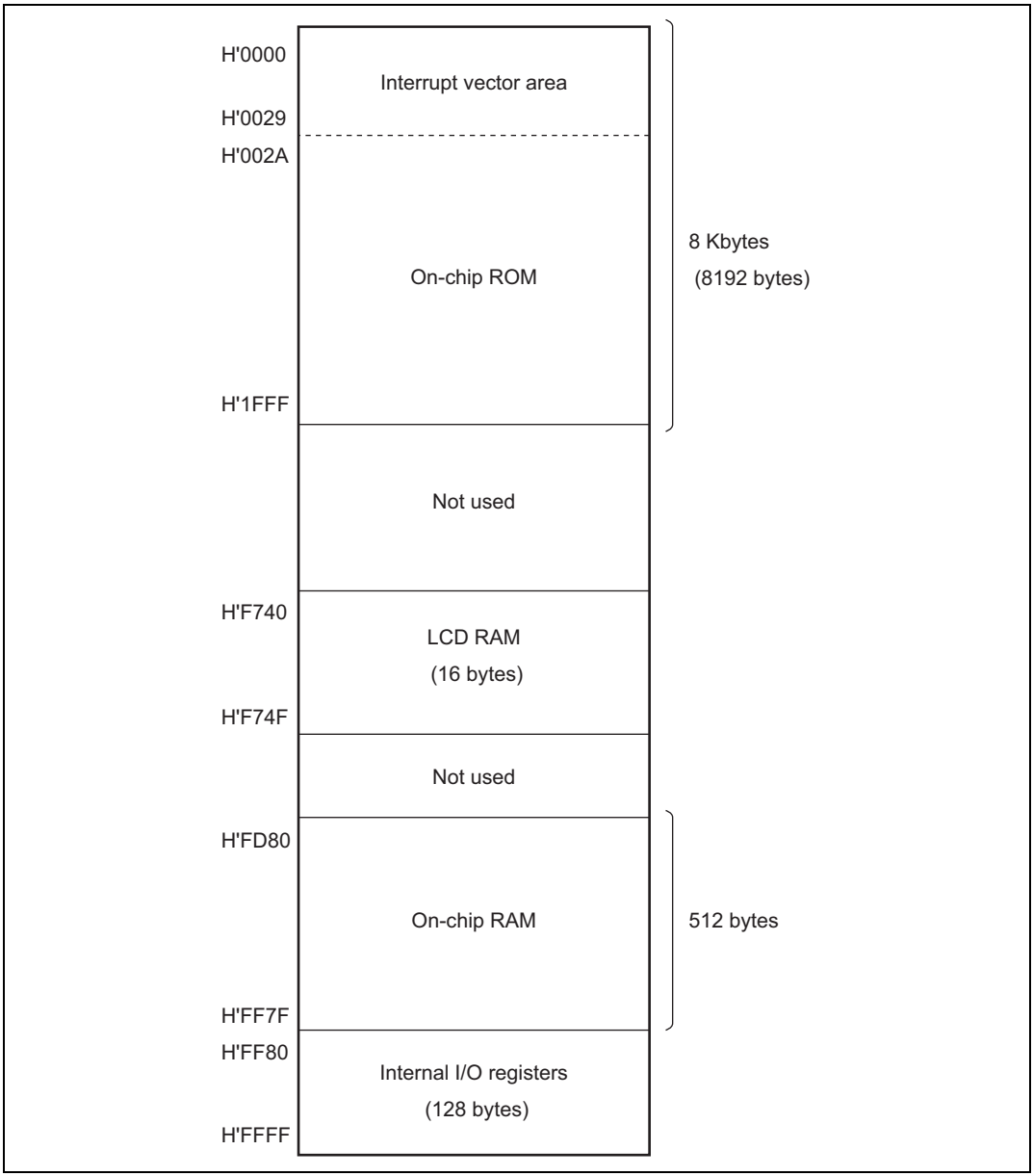

Figure 2.16(5) H8/38020, H8/38020S, and H8/38120 Memory Map

2.9 Application Notes

2.9.1 Notes on Data Access

1. Access to Empty Areas:

   The address space of the H8/300L CPU includes empty areas in addition to the RAM, registers, and ROM areas available to the user. If these empty areas are mistakenly accessed by an application program, the following results will occur.

   Data transfer from CPU to empty area:

   The transferred data will be lost. This action may also cause the CPU to misoperate.

   Data transfer from empty area to CPU:

   Unpredictable data is transferred.

2. Access to Internal I/O Registers:

   Internal data transfer to or from on-chip modules other than the ROM and RAM areas makes use of an 8-bit data width. If word access is attempted to these areas, the following results will occur.

   Word access from CPU to I/O register area:

   Upper byte: Will be written to I/O register.

   Lower byte: Transferred data will be lost.

   Word access from I/O register to CPU:

   Upper byte: Will be written to upper part of CPU register.

   Lower byte: Unpredictable data will be written to lower part of CPU register.

Byte size instructions should therefore be used when transferring data to or from I/O registers other than the on-chip ROM and RAM areas. Figure 2.17 shows the data size and number of states in which on-chip peripheral modules can be accessed.

			Access		States
			Word	Byte	
H'0000 H'0029	Interrupt vector area (42 bytes)	32 Kbytes	○	○	2
H'002A H'7FFF*1	On-chip ROM				
	Not used		—	—	—
H'F020 H'F02B	Internal I/O registers*3		×	○	2
	Not used		—	—	—
H'F740 H'F74F	LCD RAM (16 bytes)		○	○	2
	Not used		—	—	—
H'F780 H'FB7F	(1-Kbyte work area for flash memory programming)*3		○	○	2
H'FB80*2 H'FF7F	Internal RAM User Area	1024 bytes	○	○	2
H'FF80	Internal I/O registers (128 bytes)		×	○	2
		H'FF98 to H'FF9F	×	○	3
			×	○	2
		H'FFA8 to H'FFAF	×	○	3
H'FFFF			×	○	2

Notes: These examples apply to the H8/38024.

1. On the H8/38024, H8/38124, and H8/38024S, 32 Kbytes and the address is H'7FFF; on the H8/38023, H8/38123, and H8/38023S, 24 Kbytes and the address is H'5FFF; on the H8/38022, H8/38122, and H8/38022S, 16 Kbytes and the address is H'3FFF; on the H8/38021, H8/38121, and H8/38021S, 12 Kbytes and the address is H'2FFF; on the H8/38020, H8/38120, and H8/38020S, 8 Kbytes and the address is H'1FFF.
2. On the H8/38021, H8/38121, H8/38021S, H8/38020, H8/38120, and H8/38020S, 512 bytes and the address is H'FD80.
3. Only the HD64F38024, HD64F38024R, HD64F38122, and HD64F38124 are equipped with internal I/O registers from H'F020 to H'F02B and on-chip RAM from H'F780 to H'FB7F. Attempting to access these areas on products other than the HD64F38024, HD64F38024R, HD64F38122, and HD64F38124 will result in access to an empty area.

Figure 2.17 Data Size and Number of States for Access to and from On-Chip Peripheral Modules

2.9.2 Notes on Bit Manipulation

The BSET, BCLR, BNOT, BST, and BIST instructions read one byte of data, modify the data, then write the data byte again. Special care is required when using these instructions in cases where two registers are assigned to the same address, in the case of registers that include write-only bits, and when the instruction accesses an I/O port.

Order of Operation		Operation
1	Read	Read byte data at the designated address
2	Modify	Modify a designated bit in the read data
3	Write	Write the altered byte data to the designated address

1. Bit manipulation in two registers assigned to the same address

Example 1: timer load register and timer counter

Figure 2.18 shows an example in which two timer registers share the same address. When a bit manipulation instruction accesses the timer load register and timer counter of a reloadable timer, since these two registers share the same address, the following operations take place.

Order of Operation		Operation
1	Read	Timer counter data is read (one byte)
2	Modify	The CPU modifies (sets or resets) the bit designated in the instruction
3	Write	The altered byte data is written to the timer load register

The timer counter is counting, so the value read is not necessarily the same as the value in the timer load register. As a result, bits other than the intended bit in the timer load register may be modified to the timer counter value.

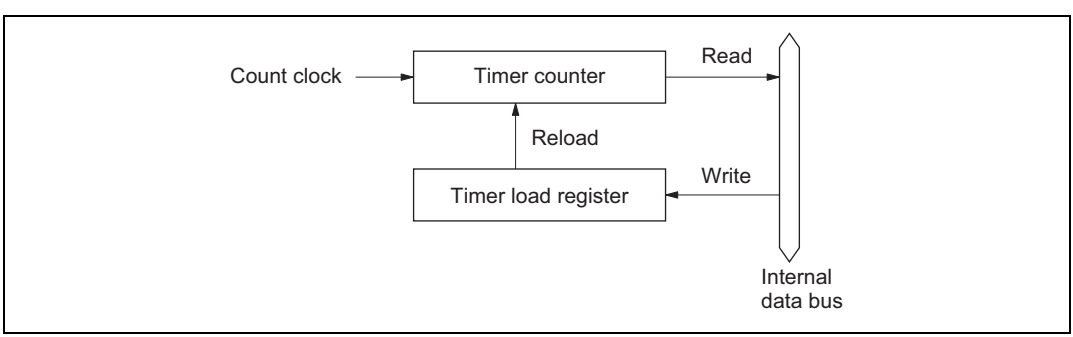

Figure 2.18 Timer Configuration Example

Example 2: BSET instruction executed designating port 3

$P3_7$ and $P3_6$ are designated as input pins, with a low-level signal input at $P3_7$ and a high-level signal at $P3_6$. The remaining pins, $P3_5$ to $P3_1$, are output pins and output low-level signals. In this example, the BSET instruction is used to change pin $P3_0$ to high-level output.

[A: Prior to executing BSET]

	$P3_7$	**$P3_6$**	**$P3_5$**	**$P3_4$**	**$P3_3$**	**$P3_2$**	**$P3_1$**	**$P3_0$**
Input/output	Input	Input	Output	Output	Output	Output	Output	Output
Pin state	Low level	High level	Low level	Low level	Low level	Low level	Low level	Low level
PCR3	0	0	1	1	1	1	1	1
PDR3	1	0	0	0	0	0	0	0

[B: BSET instruction executed]

```
BSET   #0  ,  @PDR3
```

The BSET instruction is executed designating port 3.

[C: After executing BSET]

	$P3_7$	**$P3_6$**	**$P3_5$**	**$P3_4$**	**$P3_3$**	**$P3_2$**	**$P3_1$**	**$P3_0$**
Input/output	Input	Input	Output	Output	Output	Output	Output	Output
Pin state	Low level	High level	Low level	Low level	Low level	Low level	Low level	High level
PCR3	0	0	1	1	1	1	1	1
PDR3	0	1	0	0	0	0	0	1

[D: Explanation of how BSET operates]

When the BSET instruction is executed, first the CPU reads port 3.

Since $P3_7$ and $P3_6$ are input pins, the CPU reads the pin states (low-level and high-level input). $P3_5$ to $P3_0$ are output pins, so the CPU reads the value in PDR3. In this example PDR3 has a value of H'80, but the value read by the CPU is H'40.

Next, the CPU sets bit 0 of the read data to 1, changing the PDR3 data to H'41. Finally, the CPU writes this value (H'41) to PDR3, completing execution of BSET.

As a result of this operation, bit 0 in PDR3 becomes 1, and $P3_0$ outputs a high-level signal. However, bits 7 and 6 of PDR3 end up with different values.

To avoid this problem, store a copy of the PDR3 data in a work area in memory. Perform the bit manipulation on the data in the work area, then write this data to PDR3.

[A: Prior to executing BSET]

```
MOV. B  #80,  R0L
MOV. B  R0L,  @RAM0
MOV. B  R0L,  @PDR3
```

The PDR3 value (H'80) is written to a work area in memory (RAM0) as well as to PDR3

	$P3_7$	**$P3_6$**	**$P3_5$**	**$P3_4$**	**$P3_3$**	**$P3_2$**	**$P3_1$**	**$P3_0$**
Input/output	Input	Input	Output	Output	Output	Output	Output	Output
Pin state	Low level	High level	Low level	Low level	Low level	Low level	Low level	Low level
PCR3	0	0	1	1	1	1	1	1
PDR3	1	0	0	0	0	0	0	0
RAM0	1	0	0	0	0	0	0	0

[B: BSET instruction executed]

```
BSET   #0  ,  @RAM0
```

The BSET instruction is executed designating the PDR3 work area (RAM0).

[C: After executing BSET]

```
MOV. B  @RAM0, R0L
MOV. B  R0L,  @PDR3
```

The work area (RAM0) value is written to PDR3.

	$P3_7$	**$P3_6$**	**$P3_5$**	**$P3_4$**	**$P3_3$**	**$P3_2$**	**$P3_1$**	**$P3_0$**
Input/output	Input	Input	Output	Output	Output	Output	Output	Output
Pin state	Low level	High level	Low level	Low level	Low level	Low level	Low level	High level
PCR3	0	0	1	1	1	1	1	1
PDR3	1	0	0	0	0	0	0	1
RAM0	1	0	0	0	0	0	0	1

2. Bit manipulation in a register containing a write-only bit

Example 3: BCLR instruction executed designating port 3 control register PCR3

As in the examples above, $P3_7$ and $P3_6$ are input pins, with a low-level signal input at $P3_7$ and a high-level signal at $P3_6$. The remaining pins, $P3_5$ to $P3_0$, are output pins that output low-level signals. In this example, the BCLR instruction is used to change pin $P3_0$ to an input port. It is assumed that a high-level signal will be input to this input pin.

[A: Prior to executing BCLR]

	$P3_7$	**$P3_6$**	**$P3_5$**	**$P3_4$**	**$P3_3$**	**$P3_2$**	**$P3_1$**	**$P3_0$**
Input/output	Input	Input	Output	Output	Output	Output	Output	Output
Pin state	Low level	High level	Low level	Low level	Low level	Low level	Low level	Low level
PCR3	0	0	1	1	1	1	1	1
PDR3	1	0	0	0	0	0	0	0

[B: BCLR instruction executed]

```
BCLR   #0  ,  @PCR3
```

The BCLR instruction is executed designating PCR3.

[C: After executing BCLR]

	$P3_7$	**$P3_6$**	**$P3_5$**	**$P3_4$**	**$P3_3$**	**$P3_2$**	**$P3_1$**	**$P3_0$**
Input/output	Output	Output	Output	Output	Output	Output	Output	Input
Pin state	Low level	High level	Low level	Low level	Low level	Low level	Low level	High level
PCR3	1	1	1	1	1	1	1	0
PDR3	1	0	0	0	0	0	0	0

[D: Explanation of how BCLR operates]

When the BCLR instruction is executed, first the CPU reads PCR3. Since PCR3 is a write-only register, the CPU reads a value of H'FF, even though the PCR3 value is actually H'3F.

Next, the CPU clears bit 0 in the read data to 0, changing the data to H'FE. Finally, this value (H'FE) is written to PCR3 and BCLR instruction execution ends.

As a result of this operation, bit 0 in PCR3 becomes 0, making $P3_0$ an input port. However, bits 7 and 6 in PCR3 change to 1, so that $P3_7$ and $P3_6$ change from input pins to output pins.

To avoid this problem, store a copy of the PCR3 data in a work area in memory. Perform the bit manipulation on the data in the work area, then write this data to PCR3.

[A: Prior to executing BCLR]

```
MOV. B  #3F,  R0L
MOV. B  R0L,  @RAM0
MOV. B  R0L,  @PCR3
```

The PCR3 value (H'3F) is written to a work area in memory (RAM0) as well as to PCR3.

	$P3_7$	**$P3_6$**	**$P3_5$**	**$P3_4$**	**$P3_3$**	**$P3_2$**	**$P3_1$**	**$P3_0$**
Input/output	Input	Input	Output	Output	Output	Output	Output	Output
Pin state	Low level	High level	Low level	Low level	Low level	Low level	Low level	Low level
PCR3	0	0	1	1	1	1	1	1
PDR3	1	0	0	0	0	0	0	0
RAM0	0	0	1	1	1	1	1	1

[B: BCLR instruction executed]

```
BCLR   #0  ,  @RAM0
```

The BCLR instruction is executed designating the PCR3 work area (RAM0).

[C: After executing BCLR]

```
MOV. B  @RAM0, R0L
MOV. B  R0L,  @PCR3
```

The work area (RAM0) value is written to PCR3.

	$P3_7$	**$P3_6$**	**$P3_5$**	**$P3_4$**	**$P3_3$**	**$P3_2$**	**$P3_1$**	**$P3_0$**
Input/output	Input	Input	Output	Output	Output	Output	Output	Output
Pin state	Low level	High level	Low level	Low level	Low level	Low level	Low level	High level
PCR3	0	0	1	1	1	1	1	0
PDR3	1	0	0	0	0	0	0	0
RAM0	0	0	1	1	1	1	1	0

Table 2.12 lists the pairs of registers that share identical addresses. Table 2.13 lists the registers that contain write-only bits.

Table 2.12 Registers with Shared Addresses

Register Name	Abbreviation	Address
Timer counter C/Timer load register C	TCC/TLC	H'FFB5
Port data register 1*	PDR1	H'FFD4
Port data register 3*	PDR3	H'FFD6
Port data register 4*	PDR4	H'FFD7
Port data register 5*	PDR5	H'FFD8
Port data register 6*	PDR6	H'FFD9
Port data register 7*	PDR7	H'FFDA
Port data register 8*	PDR8	H'FFDB
Port data register A*	PDRA	H'FFDD

Note: * Port data registers have the same addresses as input pins.

Table 2.13 Registers with Write-Only Bits

Register Name	Abbreviation	Address
Port control register 1	PCR1	H'FFE4
Port control register 3	PCR3	H'FFE6
Port control register 4	PCR4	H'FFE7
Port control register 5	PCR5	H'FFE8
Port control register 6	PCR6	H'FFE9
Port control register 7	PCR7	H'FFEA
Port control register 8	PCR8	H'FFEB
Port control register A	PCRA	H'FFED
Timer control register F	TCRF	H'FFB6
PWM1 control register	PWCR1	H'FFD0
PWM1 data register U	PWDRU1	H'FFD1
PWM1 data register L	PWDRL1	H'FFD2
PWM2 control register	PWCR2	H'FFCD
PWM2 data register U	PWDRU2	H'FFCE
PWM2 data register L	PWDRL2	H'FFCF
Event counter PWM data register H	ECPWDRH	H'FF8E
Event counter PWM data register L	ECPWDRL	H'FF8F

2.9.3 Notes on Use of the EEPMOV Instruction

- The EEPMOV instruction is a block data transfer instruction. It moves the number of bytes specified by R4L from the address specified by R5 to the address specified by R6.

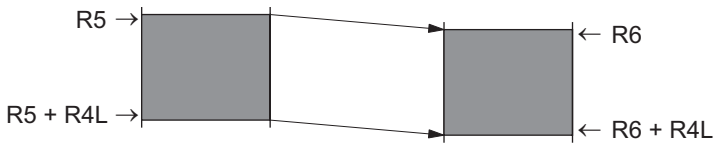

- When setting R4L and R6, make sure that the final destination address (R6 + R4L) does not exceed H'FFFF. The value in R6 must not change from H'FFFF to H'0000 during execution of the instruction.

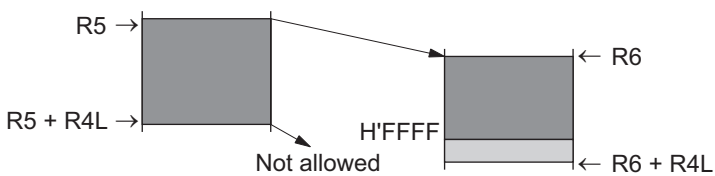

Section 3 Exception Handling

3.1 Overview

Exception handling is performed in the H8/38024 Group, H8/38024S Group, H8/38024F-ZTAT Group, and H8/38124 Group when a reset or interrupt occurs. Table 3.1 shows the priorities of these two types of exception handling.

Table 3.1 Exception Handling Types and Priorities

Priority	Exception Source	Time of Start of Exception Handling
High	Reset	Exception handling starts as soon as the reset state is cleared
↑	Interrupt	When an interrupt is requested, exception handling starts after execution of the present instruction or the exception handling in progress is completed
Low		

3.2 Reset

3.2.1 Overview

A reset is the highest-priority exception. The internal state of the CPU and the registers of the on-chip peripheral modules are initialized.

3.2.2 Reset Sequence

As soon as the $\overline{\text{RES}}$ pin goes low, all processing is stopped and the chip enters the reset state.

To make sure the chip is reset properly, observe the following precautions.

- At power on: Hold the $\overline{\text{RES}}$ pin low until the clock pulse generator output stabilizes.
- Resetting during operation: Hold the $\overline{\text{RES}}$ pin low for at least 10 system clock cycles.

Reset exception handling takes place as follows.

- The CPU internal state and the registers of on-chip peripheral modules are initialized, with the I bit of the condition code register (CCR) set to 1.
- The PC is loaded from the reset exception handling vector address (H'0000 to H'0001), after which the program starts executing from the address indicated in PC.

When system power is turned on or off, the $\overline{RES}$ pin should be held low.

Figure 3.1 shows the reset sequence starting from $\overline{RES}$ input.

See section 14.3.1, Power-On Reset Circuit, for information on the reset sequence for the H8/38124 Group, which is equipped with an on-chip power-on reset circuit.

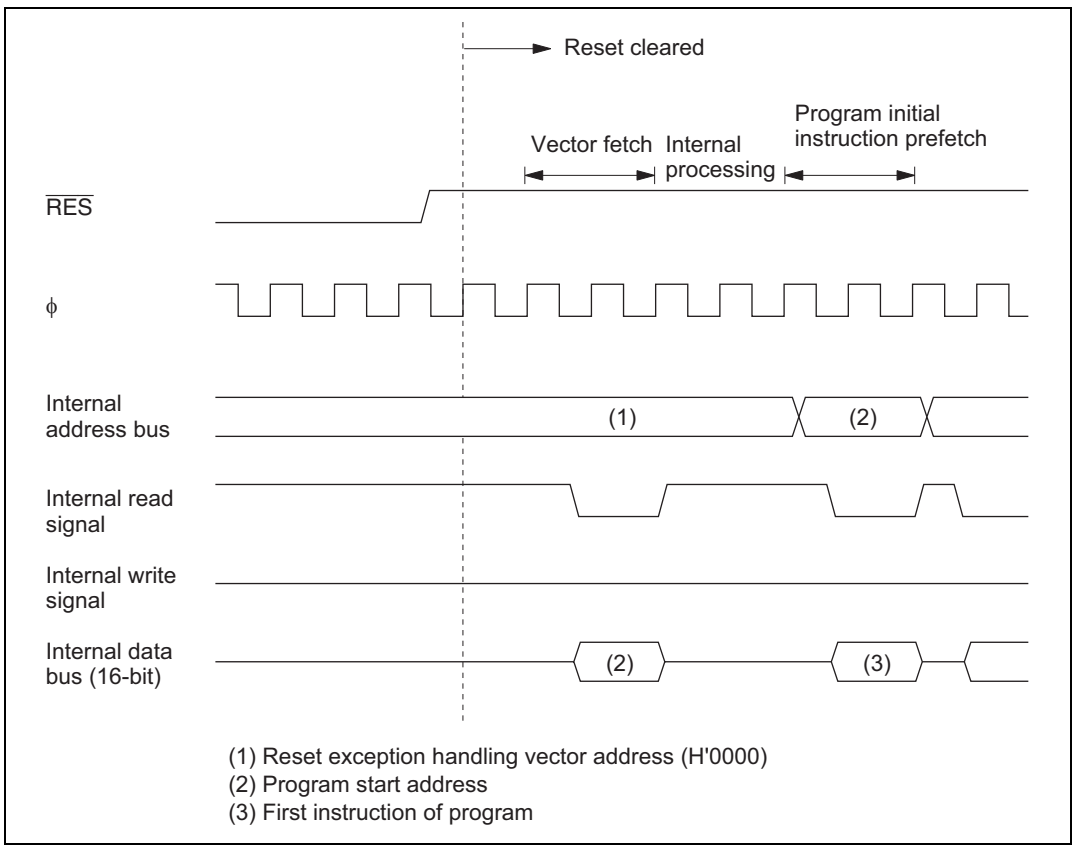

Figure 3.1 Reset Sequence

3.2.3 Interrupt Immediately after Reset

After a reset, if an interrupt were to be accepted before the stack pointer (SP: R7) was initialized, PC and CCR would not be pushed onto the stack correctly, resulting in program runaway. To prevent this, immediately after reset exception handling all interrupts are masked. For this reason, the initial program instruction is always executed immediately after a reset. This instruction should initialize the stack pointer (e.g. MOV.W #xx: 16, SP).

3.3 Interrupts

3.3.1 Overview

The interrupt sources include 13 external interrupts (WKP_7 to WKP_0, IRQ_4, IRQ_3, IRQ_1, IRQ_0, IRQAEC) and 9 internal interrupts from on-chip peripheral modules. Table 3.2 shows the interrupt sources, their priorities, and their vector addresses. When more than one interrupt is requested, the interrupt with the highest priority is processed.

The interrupts have the following features:

- Internal and external interrupts can be masked by the I bit in CCR. When the I bit is set to 1, interrupt request flags can be set but the interrupts are not accepted.
- IRQ_4, IRQ_3, IRQ_1, IRQ_0, and WKP_7 to WKP_0 can be set to either rising edge sensing or falling edge sensing, and IRQAEC can be set to either rising edge sensing, falling edge sensing, or both edge sensing.

Table 3.2 Interrupt Sources and Their Priorities

Interrupt Source	Interrupt	Vector Number	Vector Address	Priority
$\overline{RES}$	Reset	0	H'0000 to H'0001	High
Watchdog timer				↑
$\overline{IRQ}_0$ LVDI*	IRQ_0 Low-voltage detect interrupt*	4	H'0008 to H'0009	
$\overline{IRQ}_1$	IRQ_1	5	H'000A to H'000B	
IRQAEC	IRQAEC	6	H'000C to H'000D	
$\overline{IRQ}_3$	IRQ_3	7	H'000E to H'000F	
$\overline{IRQ}_4$	IRQ_4	8	H'0010 to H'0011	
$\overline{WKP}_0$ $\overline{WKP}_1$ $\overline{WKP}_2$ $\overline{WKP}_3$ $\overline{WKP}_4$ $\overline{WKP}_5$ $\overline{WKP}_6$ $\overline{WKP}_7$	WKP_0 WKP_1 WKP_2 WKP_3 WKP_4 WKP_5 WKP_6 WKP_7	9	H'0012 to H'0013	
Timer A	Timer A overflow	11	H'0016 to H'0017	
Asynchronous event counter	Asynchronous event counter overflow	12	H'0018 to H'0019	
Timer C	Timer C overflow or underflow	13	H'001A to H'001B	
Timer FL	Timer FL compare match Timer FL overflow	14	H'001C to H'001D	
Timer FH	Timer FH compare match Timer FH overflow	15	H'001E to H'001F	
Timer G	Timer G input capture Timer G overflow	16	H'0020 to H'0021	
SCI3	SCI3 transmit end SCI3 transmit data empty SCI3 receive data full SCI3 overrun error SCI3 framing error SCI3 parity error	18	H'0024 to H'0025	
A/D	A/D conversion end	19	H'0026 to H'0027	
(SLEEP instruction executed)	Direct transfer	20	H'0028 to H'0029	Low

Notes: Vector addresses H'0002 to H'0007, H'0014 to H'0015, and H'0022 to H'0023 are reserved and cannot be used.

* The low-voltage detect interrupt triggered by the LVDI is only implemented on the H8/38124 Group.

3.3.2 Interrupt Control Registers

Table 3.3 lists the registers that control interrupts.

Table 3.3 Interrupt Control Registers

Name	Abbreviation	R/W	Initial Value	Address
IRQ edge select register	IEGR	R/W	—	H'FFF2
Interrupt enable register 1	IENR1	R/W	—	H'FFF3
Interrupt enable register 2	IENR2	R/W	—	H'FFF4
Interrupt request register 1	IRR1	R/W*	—	H'FFF6
Interrupt request register 2	IRR2	R/W*	—	H'FFF7
Wakeup interrupt request register	IWPR	R/W*	H'00	H'FFF9
Wakeup edge select register	WEGR	R/W	H'00	H'FF90

Note: * Write is enabled only for writing of 0 to clear a flag.

IRQ Edge Select Register (IEGR)

Bit	7	6	5	4	3	2	1	0
	—	—	—	IEG4	IEG3	—	IEG1	IEG0
Initial value	1	1	1	0	0	—	0	0
Read/Write	—	—	—	R/W	R/W	W	R/W	R/W

IEGR is an 8-bit read/write register used to designate whether pins $\overline{IRQ_4}$, $\overline{IRQ_3}$, $\overline{IRQ_1}$, and $\overline{IRQ_0}$ are set to rising edge sensing or falling edge sensing. For the IRQAEC pin edge sensing specifications, see section 9.7, Asynchronous Event Counter (AEC).

Bits 7 to 5—Reserved

Bits 7 to 5 are reserved: they are always read as 1 and cannot be modified.

Bit 4—IRQ_4 Edge Select (IEG4)

Bit 4 selects the input sensing of the $\overline{IRQ_4}$ pin and $\overline{ADTRG}$ pin.

Bit 4 IEG4	Description	
0	Falling edge of $\overline{IRQ_4}$ and $\overline{ADTRG}$ pin input is detected	(initial value)
1	Rising edge of $\overline{IRQ_4}$ and $\overline{ADTRG}$ pin input is detected	

Bit 3—IRQ_3 Edge Select (IEG3)

Bit 3 selects the input sensing of the $\overline{IRQ_3}$ pin and TMIF pin.

Bit 3 IEG3	Description	
0	Falling edge of $\overline{IRQ_3}$ and TMIF pin input is detected	(initial value)
1	Rising edge of $\overline{IRQ_3}$ and TMIF pin input is detected	

Bit 2—Reserved

Bit 2 is reserved: it can only be written with 0.

Bit 1—IRQ_1 Edge Select (IEG1)

Bit 1 selects the input sensing of the $\overline{IRQ_1}$ pin and TMIC pin.

Bit 1 IEG1	Description	
0	Falling edge of $\overline{IRQ_1}$ and TMIC pin input is detected	(initial value)
1	Rising edge of $\overline{IRQ_1}$ and TMIC pin input is detected	

Bit 0—IRQ_0 Edge Select (IEG0)

Bit 0 selects the input sensing of pin $\overline{IRQ_0}$.

Bit 0 IEG0	Description	
0	Falling edge of $\overline{IRQ_0}$ pin input is detected	(initial value)
1	Rising edge of $\overline{IRQ_0}$ pin input is detected	

Interrupt Enable Register 1 (IENR1)

Bit	7	6	5	4	3	2	1	0
	IENTA	—	IENWP	IEN4	IEN3	IENEC2	IEN1	IEN0
Initial value	0	—	0	0	0	0	0	0
Read/Write	R/W	W	R/W	R/W	R/W	R/W	R/W	R/W

IENR1 is an 8-bit read/write register that enables or disables interrupt requests.

Bit 7—Timer A Interrupt Enable (IENTA)

Bit 7 enables or disables timer A overflow interrupt requests.

Bit 7 IENTA	Description	
0	Disables timer A interrupt requests	(initial value)
1	Enables timer A interrupt requests	

Bit 6—Reserved

Bit 6 is reserved: it can only be written with 0.

Bit 5—Wakeup Interrupt Enable (IENWP)

Bit 5 enables or disables WKP_7 to WKP_0 interrupt requests.

Bit 5 IENWP	Description	
0	Disables $\overline{WKP}_7$ to $\overline{WKP}_0$ interrupt requests	(initial value)
1	Enables $\overline{WKP}_7$ to $\overline{WKP}_0$ interrupt requests	

Bits 4 and 3—IRQ_4 and IRQ_3 Interrupt Enable (IEN4 and IEN3)

Bits 4 and 3 enable or disable IRQ_4 and IRQ_3 interrupt requests.

Bit n IENn	Description	
0	Disables interrupt requests from pin $\overline{IRQn}$	(initial value)
1	Enables interrupt requests from pin $\overline{IRQn}$	

(n = 4 or 3)

Bit 2—IRQAEC Interrupt Enable (IENEC2)

Bit 2 enables or disables IRQAEC interrupt requests.

Bit 2 IENEC2	Description	
0	Disables IRQAEC interrupt requests	(initial value)
1	Enables IRQAEC interrupt requests	

Bits 1 and 0—IRQ_1 and IRQ_0 Interrupt Enable (IEN1 and IEN0)

Bits 1 and 0 enable or disable IRQ_1 and IRQ_0 interrupt requests.

Bit n IENn	Description	
0	Disables interrupt requests from pin $\overline{IRQn}$	(initial value)
1	Enables interrupt requests from pin $\overline{IRQn}$	

(n = 1 or 0)

Interrupt Enable Register 2 (IENR2)

Bit	7	6	5	4	3	2	1	0
	IENDT	IENAD	—	IENTG	IENTFH	IENTFL	IENTC	IENEC
Initial value	0	0	—	0	0	0	0	0
Read/Write	R/W	R/W	W	R/W	R/W	R/W	R/W	R/W

IENR2 is an 8-bit read/write register that enables or disables interrupt requests.

Bit 7—Direct Transfer Interrupt Enable (IENDT)

Bit 7 enables or disables direct transfer interrupt requests.

Bit 7 IENDT	Description	
0	Disables direct transfer interrupt requests	(initial value)
1	Enables direct transfer interrupt requests	

Bit 6—A/D Converter Interrupt Enable (IENAD)

Bit 6 enables or disables A/D converter interrupt requests.

Bit 6 IENAD	Description	
0	Disables A/D converter interrupt requests	(initial value)
1	Enables A/D converter interrupt requests	

Bit 5—Reserved

Bit 5 is reserved bit: it can only be written with 0.

Bit 4—Timer G Interrupt Enable (IENTG)

Bit 4 enables or disables timer G input capture or overflow interrupt requests.

Bit 4 IENTG	Description	
0	Disables timer G interrupt requests	(initial value)
1	Enables timer G interrupt requests	

Bit 3—Timer FH Interrupt Enable (IENTFH)

Bit 3 enables or disables timer FH compare match and overflow interrupt requests.

Bit 3 IENTFH	Description	
0	Disables timer FH interrupt requests	(initial value)
1	Enables timer FH interrupt requests	

Bit 2—Timer FL Interrupt Enable (IENTFL)

Bit 2 enables or disables timer FL compare match and overflow interrupt requests.

Bit 2 IENTFL	Description	
0	Disables timer FL interrupt requests	(initial value)
1	Enables timer FL interrupt requests	

Bit 1—Timer C Interrupt Enable (IENTC)

Bit 1 enables or disables timer C overflow and underflow interrupt requests.

Bit 1 IENTC	Description	
0	Disables timer C interrupt requests	(initial value)
1	Enables timer C interrupt requests	

Bit 0—Asynchronous Event Counter Interrupt Enable (IENEC)

Bit 0 enables or disables asynchronous event counter interrupt requests.

Bit 0 IENEC	Description	
0	Disables asynchronous event counter interrupt requests	(initial value)
1	Enables asynchronous event counter interrupt requests	

For details of SCI3 interrupt control, see section 10.2.6 Serial control register 3 (SCR3).

Interrupt Request Register 1 (IRR1)

Bit	7	6	5	4	3	2	1	0
	IRRTA	—	—	IRRI4	IRRI3	IRREC2	IRRI1	IRRI0
Initial value	0	—	1	0	0	0	0	0
Read/Write	R/(W)*	W	—	R/(W)*	R/(W)*	R/(W)*	R/(W)*	R/(W)*

Note: * Only a write of 0 for flag clearing is possible

IRR1 is an 8-bit read/write register, in which a corresponding flag is set to 1 when a timer A, IRQAEC, IRQ_4, IRQ_3, IRQ_1, or IRQ_0 interrupt is requested. The flags are not cleared automatically when an interrupt is accepted. It is necessary to write 0 to clear each flag.

Bit 7—Timer A Interrupt Request Flag (IRRTA)

Bit 7 IRRTA	Description	
0	Clearing condition: When IRRTA = 1, it is cleared by writing 0	(initial value)
1	Setting condition: When the timer A counter value overflows	

Bit 6—Reserved

Bit 6 is reserved; it can only be written with 0.

Bit 5—Reserved

Bit 5 is reserved; it is always read as 1 and cannot be modified.

Bits 4 and 3—IRQ_4 and IRQ_3 Interrupt Request Flags (IRRI4 and IRRI3)

Bit n IRRIn	Description	
0	Clearing condition: When IRRIn = 1, it is cleared by writing 0	(initial value)
1	Setting condition: When pin $\overline{\text{IRQn}}$ is designated for interrupt input and the designated signal edge is input	

(n = 4 or 3)

Bit 2—IRQAEC Interrupt Request Flag (IRREC2)

Bit 2 IRREC2	Description	
0	Clearing condition: When IRREC2 = 1, it is cleared by writing 0	(initial value)
1	Setting condition: When pin IRQAEC is designated for interrupt input and the designated signal edge is input	

Bits 1 and 0—IRQ_1 and IRQ_0 Interrupt Request Flags (IRRI1 and IRRI0)

Bit n IRRIn	Description
0	Clearing condition: (initial value) When IRRIn = 1, it is cleared by writing 0
1	Setting condition: When pin $\overline{IRQn}$ is designated for interrupt input and the designated signal edge is input

(n = 1 or 0)

Interrupt Request Register 2 (IRR2)

Bit	7	6	5	4	3	2	1	0
	IRRDT	IRRAD	—	IRRTG	IRRTFH	IRRTFL	IRRTC	IRREC
Initial value	0	0	—	0	0	0	0	0
Read/Write	R/(W)*	R/(W)*	W	R/(W)*	R/(W)*	R/(W)*	R/(W)*	R/(W)*

Note: * Only a write of 0 for flag clearing is possible

IRR2 is an 8-bit read/write register, in which a corresponding flag is set to 1 when a direct transfer, A/D converter, Timer G, Timer FH, Timer FL, Timer C, or asynchronous event counter interrupt is requested. The flags are not cleared automatically when an interrupt is accepted. It is necessary to write 0 to clear each flag.

Bit 7—Direct Transfer Interrupt Request Flag (IRRDT)

Bit 7 IRRDT	Description
0	Clearing condition: (initial value) When IRRDT = 1, it is cleared by writing 0
1	Setting condition: When a direct transfer is made by executing a SLEEP instruction while DTON = 1 in SYSCR2

Bit 6—A/D Converter Interrupt Request Flag (IRRAD)

Bit 6 IRRAD	Description	
0	Clearing condition: When IRRAD = 1, it is cleared by writing 0	(initial value)
1	Setting condition: When A/D conversion is completed and ADSF is cleared to 0 in ADSR	

Bit 5—Reserved

Bit 5 is reserved: it can only be written with 0.

Bit 4—Timer G Interrupt Request Flag (IRRTG)

Bit 4 IRRTG	Description	
0	Clearing condition: When IRRTG = 1, it is cleared by writing 0	(initial value)
1	Setting condition: When the TMIG pin is designated for TMIG input and the designated signal edge is input, and when TCG overflows while OVIE is set to 1 in TMG	

Bit 3—Timer FH Interrupt Request Flag (IRRTFH)

Bit 3 IRRTFH	Description	
0	Clearing condition: When IRRTFH = 1, it is cleared by writing 0	(initial value)
1	Setting condition: When TCFH and OCRFH match in 8-bit timer mode, or when TCF (TCFL, TCFH) and OCRF (OCRFL, OCRFH) match in 16-bit timer mode	

Bit 2—Timer FL Interrupt Request Flag (IRRTFL)

Bit 2 IRRTFL	Description	
0	Clearing condition: When IRRTFL = 1, it is cleared by writing 0	(initial value)
1	Setting condition: When TCFL and OCRFL match in 8-bit timer mode	

Bit 1—Timer C Interrupt Request Flag (IRRTC)

Bit 1 IRRTC	Description	
0	Clearing condition: When IRRTC = 1, it is cleared by writing 0	(initial value)
1	Setting condition: When the timer C counter value overflows or underflows	

Bit 0—Asynchronous Event Counter Interrupt Request Flag (IRREC)

Bit 0 IRREC	Description	
0	Clearing condition: When IRREC = 1, it is cleared by writing 0	(initial value)
1	Setting condition: When ECH overflows in 16-bit counter mode, or ECH or ECL overflows in 8-bit counter mode	

Wakeup Interrupt Request Register (IWPR)

Bit	7	6	5	4	3	2	1	0
	IWPF7	IWPF6	IWPF5	IWPF4	IWPF3	IWPF2	IWPF1	IWPF0
Initial value	0	0	0	0	0	0	0	0
Read/Write	R/(W)*	R/(W)*	R/(W)*	R/(W)*	R/(W)*	R/(W)*	R/(W)*	R/(W)*

Note: * Only a write of 0 for flag clearing is possible

IWPR is an 8-bit read/write register containing wakeup interrupt request flags. When one of pins $\overline{WKP}_7$ to $\overline{WKP}_0$ is designated for wakeup input and a rising or falling edge is input at that pin, the corresponding flag in IWPR is set to 1. A flag is not cleared automatically when the corresponding interrupt is accepted. Flags must be cleared by writing 0.

Bits 7 to 0—Wakeup Interrupt Request Flags (IWPF7 to IWPF0)

Bit n IWPFn	Description
0	Clearing condition: (initial value) When IWPFn= 1, it is cleared by writing 0
1	Setting condition: When pin $\overline{WKP}_n$ is designated for wakeup input and a rising or falling edge is input at that pin

(n = 7 to 0)

Wakeup Edge Select Register (WEGR)

Bit	7	6	5	4	3	2	1	0
	WKEGS7	WKEGS6	WKEGS5	WKEGS4	WKEGS3	WKEGS2	WKEGS1	WKEGS0
Initial value	0	0	0	0	0	0	0	0
Read/Write	R/W	R/W	R/W	R/W	R/W	R/W	R/W	R/W

WEGR is an 8-bit read/write register that specifies rising or falling edge sensing for pins $\overline{\text{WKP}}$n.

WEGR is initialized to H'00 by a reset.

Bit n—$\overline{\text{WKP}}$n Edge Select (WKEGSn)

Bit n selects $\overline{\text{WKP}}$n pin input sensing.

Bit n WKEGSn	Description	
0	$\overline{\text{WKP}}$n pin falling edge detected	(initial value)
1	$\overline{\text{WKP}}$n pin rising edge detected	

(n = 7 to 0)

3.3.3 External Interrupts

There are 13 external interrupts: WKP7 to WKP0, IRQ4, IRQ3, IRQ1, IRQ0, and IRQAEC.

Interrupts WKP_7 to WKP_0

Interrupts WKP7 to WKP0 are requested by either rising or falling edge input to pins $\overline{\text{WKP}}_7$ to $\overline{\text{WKP}}_0$. When these pins are designated as pins $\overline{\text{WKP}}_7$ to $\overline{\text{WKP}}_0$ in port mode register 5 and a rising or falling edge is input, the corresponding bit in IWPR is set to 1, requesting an interrupt. Recognition of wakeup interrupt requests can be disabled by clearing the IENWP bit to 0 in IENR1. These interrupts can all be masked by setting the I bit to 1 in CCR.

When WKP7 to WKP0 interrupt exception handling is initiated, the I bit is set to 1 in CCR. Vector number 9 is assigned to interrupts WKP7 to WKP0. All eight interrupt sources have the same vector number, so the interrupt-handling routine must discriminate the interrupt source.

Interrupts IRQ_4, IRQ_3, IRQ_1 and IRQ_0

Interrupts IRQ4, IRQ3, IRQ1, and IRQ0 are requested by input signals to pins $\overline{IRQ_4}$, $\overline{IRQ_3}$, $\overline{IRQ_1}$, and $\overline{IRQ_0}$. These interrupts are detected by either rising edge sensing or falling edge sensing, depending on the settings of bits IEG4, IEG3, IEG1, and IEG0 in IEGR.

When these pins are designated as pins $\overline{IRQ_4}$, $\overline{IRQ_3}$, $\overline{IRQ_1}$, and $\overline{IRQ_0}$ in port mode register B, 2, and 1 and the designated edge is input, the corresponding bit in IRR1 is set to 1, requesting an interrupt. Recognition of these interrupt requests can be disabled individually by clearing bits IEN4, IEN3, IEN1, and IEN0 to 0 in IENR1. These interrupts can all be masked by setting the I bit to 1 in CCR.

When IRQ4, IRQ3, IRQ1, and IRQ0 interrupt exception handling is initiated, the I bit is set to 1 in CCR. Vector numbers 8, 7, 5, and 4 are assigned to interrupts IRQ4, IRQ3, IRQ1, and IRQ0. The order of priority is from IRQ0 (high) to IRQ4 (low). Table 3.2 gives details.

IRQAEC Interrupt

The IRQAEC interrupt is requested by an input signal to pin IRQAEC and IECPWM (output of PWM for AEC). When the IRQAEC input pin is to be used as an external interrupt, set ECPWME in AEGSR to 0. This interrupt is detected by rising edge, falling edge, or both edge sensing, depending on the settings of bits AIEGS1 and AIEGS0 in AEGSR.

When bit IENEC2 in IENR1 is 1 and the designated edge is input, the corresponding bit in IRR1 is set to 1, requesting an interrupt.

When IRQAEC interrupt exception handling is initiated, the I bit is set to 1 in CCR. Vector number 6 is assigned to the IRQAEC interrupt exception handling. Table 3.2 gives details.

3.3.4 Internal Interrupts

There are 9 internal interrupts that can be requested by the on-chip peripheral modules. When a peripheral module requests an interrupt, the corresponding bit in IRR1 or IRR2 is set to 1. Recognition of individual interrupt requests can be disabled by clearing the corresponding bit in IENR1 or IENR2. All these interrupts can be masked by setting the I bit to 1 in CCR. When internal interrupt handling is initiated, the I bit is set to 1 in CCR. Vector numbers from 20 to 18 and 16 to 11 are assigned to these interrupts. Table 3.2 shows the order of priority of interrupts from on-chip peripheral modules.

3.3.5 Interrupt Operations

Interrupts are controlled by an interrupt controller. Figure 3.2 shows a block diagram of the interrupt controller. Figure 3.3 shows the flow up to interrupt acceptance.

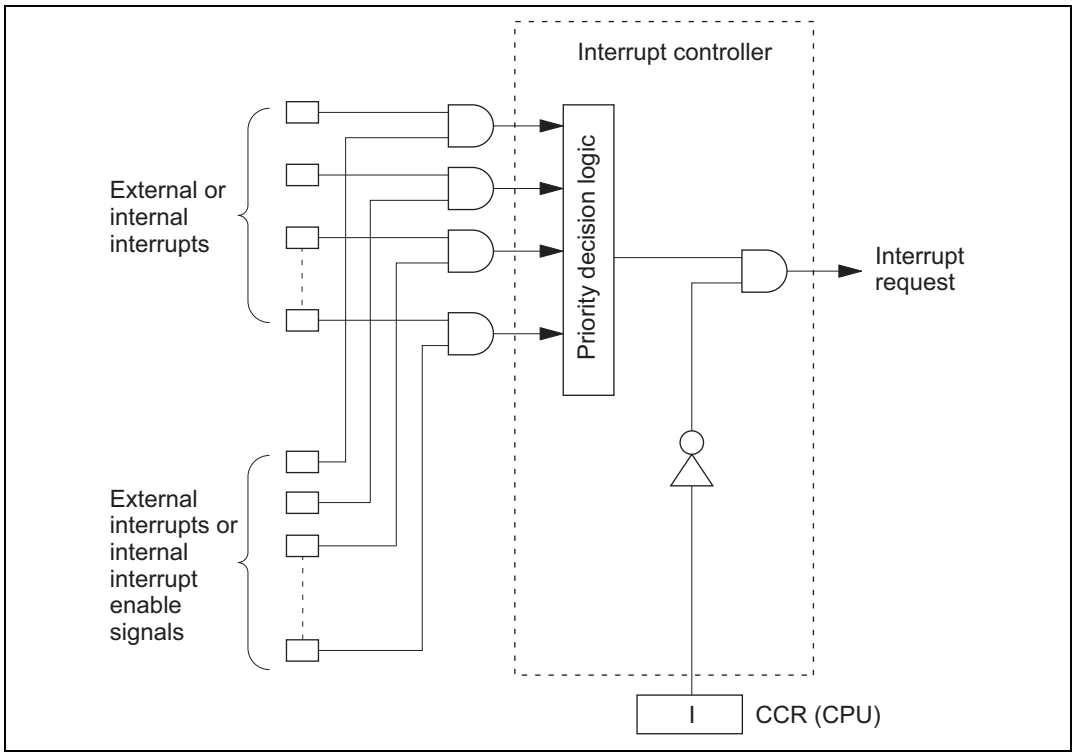

Figure 3.2 Block Diagram of Interrupt Controller

Interrupt operation is described as follows.

- When an interrupt condition is met while the interrupt enable register bit is set to 1, an interrupt request signal is sent to the interrupt controller.
- When the interrupt controller receives an interrupt request, it sets the interrupt request flag.
- From among the interrupts with interrupt request flags set to 1, the interrupt controller selects the interrupt request with the highest priority and holds the others pending. (Refer to table 3.2 for a list of interrupt priorities.)
- The interrupt controller checks the I bit of CCR. If the I bit is 0, the selected interrupt request is accepted; if the I bit is 1, the interrupt request is held pending.

- If the interrupt request is accepted, after processing of the current instruction is completed, both PC and CCR are pushed onto the stack. The state of the stack at this time is shown in figure 3.4. The PC value pushed onto the stack is the address of the first instruction to be executed upon return from interrupt handling.
- The I bit of CCR is set to 1, masking further interrupts.
- The vector address corresponding to the accepted interrupt is generated, and the interrupt handling routine located at the address indicated by the contents of the vector address is executed.

Notes: 1. When disabling interrupts by clearing bits in an interrupt enable register, or when clearing bits in an interrupt request register, always do so while interrupts are masked (I = 1).

2. If the above clear operations are performed while I = 0, and as a result a conflict arises between the clear instruction and an interrupt request, exception processing for the interrupt will be executed after the clear instruction has been executed.

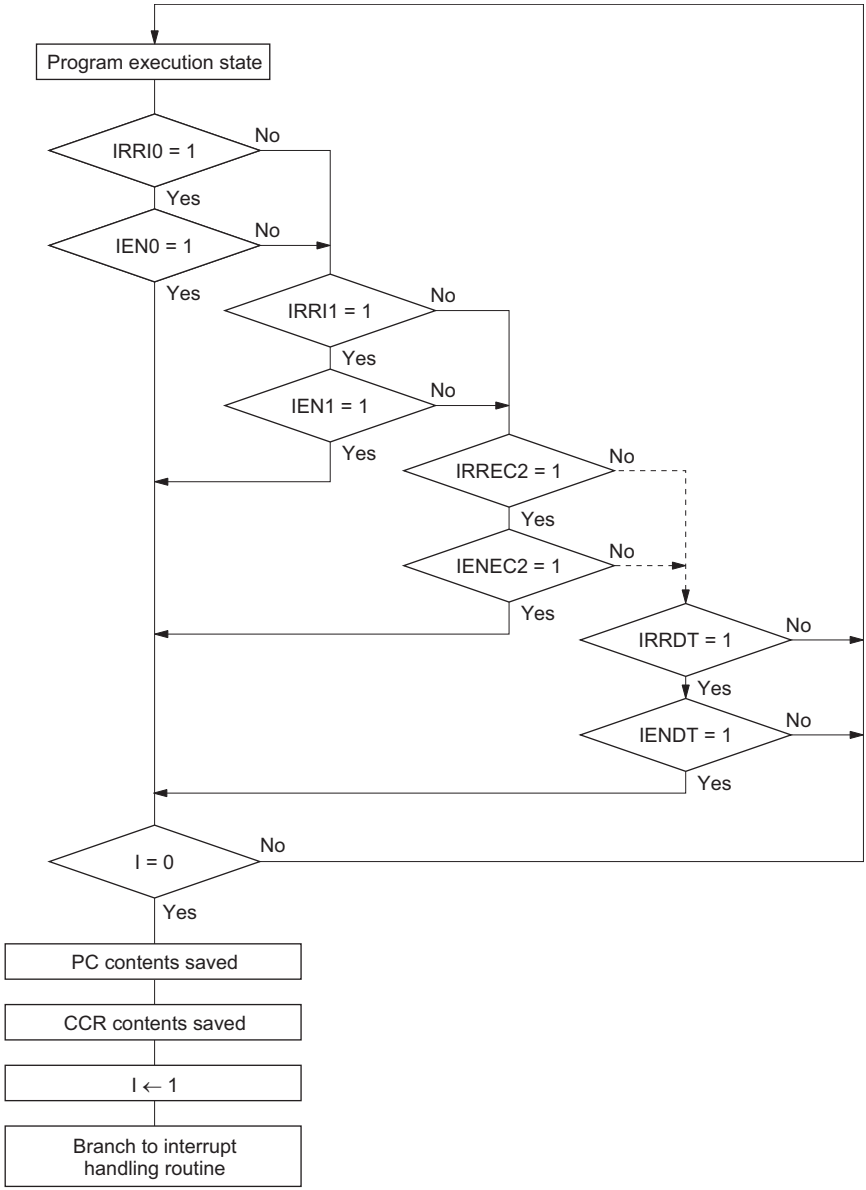

[Legend]
PC: Program counter
CCR: Condition code register
I: I bit of CCR

Figure 3.3 Flow up to Interrupt Acceptance

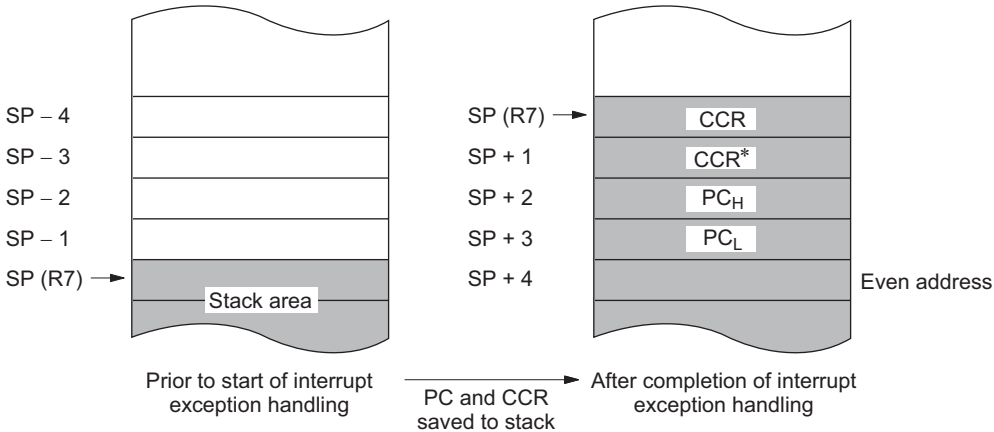

[Legend]
PC_H: Upper 8 bits of program counter (PC)
PC_L: Lower 8 bits of program counter (PC)
CCR: Condition code register
SP: Stack pointer

Notes: 1. PC shows the address of the first instruction to be executed upon return from the interrupt handling routine.
2. Register contents must always be saved and restored by word access, starting from an even-numbered address.
* Ignored on return.

Figure 3.4 Stack State after Completion of Interrupt Exception Handling

Figure 3.5 shows a typical interrupt sequence.

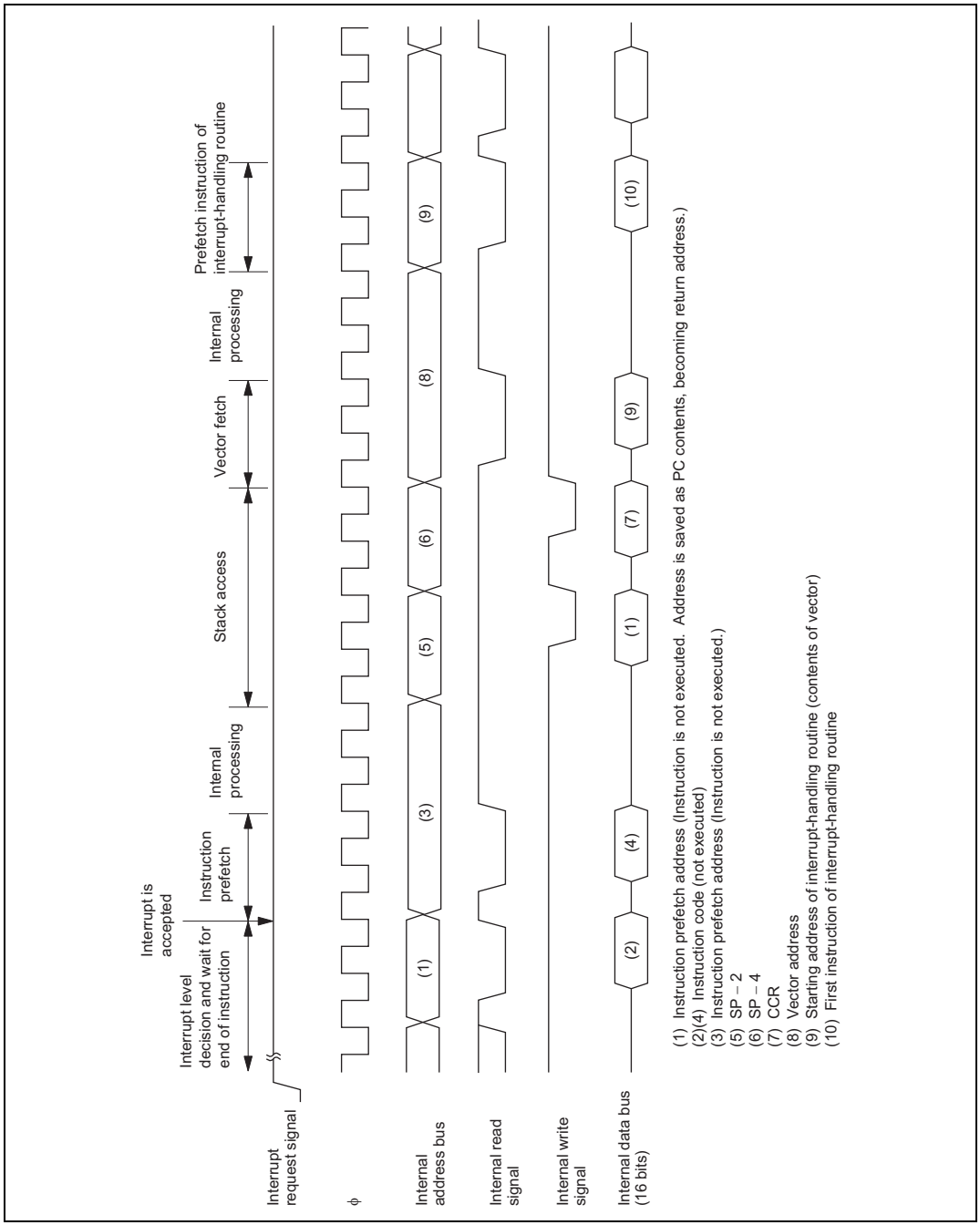

Figure 3.5 Interrupt Sequence

3.3.6 Interrupt Response Time

Table 3.4 shows the number of wait states after an interrupt request flag is set until the first instruction of the interrupt handler is executed.

Table 3.4 Interrupt Wait States

Item	States	Total
Waiting time for completion of executing instruction*	1 to 13	15 to 27
Saving of PC and CCR to stack	4	
Vector fetch	2	
Instruction fetch	4	
Internal processing	4	

Note: * Not including EEPMOV instruction.

3.4 Application Notes

3.4.1 Notes on Stack Area Use

When word data is accessed in the LSI, the least significant bit of the address is regarded as 0. Access to the stack always takes place in word size, so the stack pointer (SP: R7) should never indicate an odd address. Use PUSH Rn (MOV.W Rn, @–SP) or POP Rn (MOV.W @SP+, Rn) to save or restore register values.

Setting an odd address in SP may cause a program to crash. An example is shown in figure 3.6.

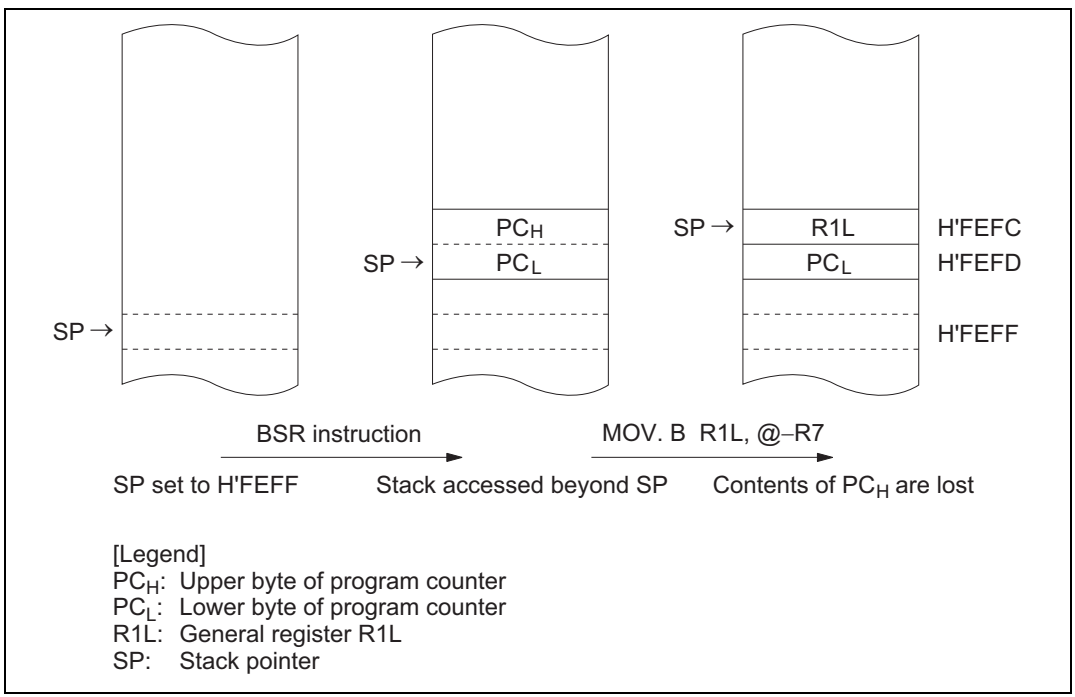

Figure 3.6 Operation when Odd Address is Set in SP

When CCR contents are saved to the stack during interrupt exception handling or restored when RTE is executed, this also takes place in word size. Both the upper and lower bytes of word data are saved to the stack; on return, the even address contents are restored to CCR while the odd address contents are ignored.

3.4.2 Notes on Rewriting Port Mode Registers

When a port mode register is rewritten to switch the functions of external interrupt pins and when the value of ECPWME in AEGSR is rewritten to switch between selection/non-selection of IRQAEC, the following points should be observed.

When an external interrupt pin function is switched by rewriting the port mode register that controls pins $\overline{IRQ}_4$, $\overline{IRQ}_3$, $\overline{IRQ}_1$, $\overline{IRQ}_0$, $\overline{WKP}_7$ to $\overline{WKP}_0$, the interrupt request flag may be set to 1 at the time the pin function is switched, even if no valid interrupt is input at the pin. Be sure to clear the interrupt request flag to 0 after switching pin functions. When the value of ECPWME in AEGSR that sets selection/non-selection of IRQAEC is rewritten, the interrupt request flag may be set to 1, even if a valid edge has not arrived on the selected IRQAEC or IECPWM (PWM output for AEC). Therefore, be sure to clear the interrupt request flag to 0 after switching the pin function. Table 3.5 shows the conditions under which interrupt request flags are set to 1 in this way.

Table 3.5 Conditions under which Interrupt Request Flag is Set to 1

Interrupt Request Flags Set to 1		Conditions
IRR1	IRRI4	When PMR1 bit IRQ4 is changed from 0 to 1 while pin $\overline{IRQ}_4$ is low and IEGR bit IEG4 = 0. When PMR1 bit IRQ4 is changed from 1 to 0 while pin $\overline{IRQ}_4$ is low and IEGR bit IEG4 = 1.
	IRRI3	When PMR1 bit IRQ3 is changed from 0 to 1 while pin $\overline{IRQ}_3$ is low and IEGR bit IEG3 = 0. When PMR1 bit IRQ3 is changed from 1 to 0 while pin $\overline{IRQ}_3$ is low and IEGR bit IEG3 = 1.
	IRREC2	When an edge as designated by AIEGS1 and AIEGS0 in AEGSR is detected because the values on the IRQAEC pin and of IECPWM at switching are different (e.g., when the rising edge has been selected and ECPWME in AEGSR is changed from 1 to 0 while pin IRQAEC is low and IECPWM = 1).
	IRRI1	When PMRB bit IRQ1 is changed from 0 to 1 while pin $\overline{IRQ}_1$ is low and IEGR bit IEG1 = 0. When PMRB bit IRQ1 is changed from 1 to 0 while pin $\overline{IRQ}_1$ is low and IEGR bit IEG1 = 1.
	IRRI0	When PMR2 bit IRQ0 is changed from 0 to 1 while pin $\overline{IRQ}_0$ is low and IEGR bit IEG0 = 0. When PMR2 bit IRQ0 is changed from 1 to 0 while pin $\overline{IRQ}_0$ is low and IEGR bit IEG0 = 1.

Interrupt Request Flags Set to 1		Conditions
IWPR	IWPF7	When PMR5 bit WKP7 is changed from 0 to 1 while pin $\overline{WKP}_7$ is low and WEGR bit WKEGS7 = 0. When PMR5 bit WKP7 is changed from 1 to 0 while pin $\overline{WKP}_7$ is low and WEGR bit WKEGS7 = 1.
	IWPF6	When PMR5 bit WKP6 is changed from 0 to 1 while pin $\overline{WKP}_6$ is low and WEGR bit WKEGS6 = 0. When PMR5 bit WKP6 is changed from 1 to 0 while pin $\overline{WKP}_6$ is low and WEGR bit WKEGS6 = 1.
	IWPF5	When PMR5 bit WKP5 is changed from 0 to 1 while pin $\overline{WKP}_5$ is low and WEGR bit WKEGS5 = 0. When PMR5 bit WKP5 is changed from 1 to 0 while pin $\overline{WKP}_5$ is low and WEGR bit WKEGS5 = 1.
	IWPF4	When PMR5 bit WKP4 is changed from 0 to 1 while pin $\overline{WKP}_4$ is low and WEGR bit WKEGS4 = 0. When PMR5 bit WKP4 is changed from 1 to 0 while pin $\overline{WKP}_4$ is low and WEGR bit WKEGS4 = 1.
	IWPF3	When PMR5 bit WKP3 is changed from 0 to 1 while pin $\overline{WKP}_3$ is low and WEGR bit WKEGS3 = 0. When PMR5 bit WKP3 is changed from 1 to 0 while pin $\overline{WKP}_3$ is low and WEGR bit WKEGS3 = 1.
	IWPF2	When PMR5 bit WKP2 is changed from 0 to 1 while pin $\overline{WKP}_2$ is low and WEGR bit WKEGS2 = 0. When PMR5 bit WKP2 is changed from 1 to 0 while pin $\overline{WKP}_2$ is low and WEGR bit WKEGS2 = 1.
	IWPF1	When PMR5 bit WKP1 is changed from 0 to 1 while pin $\overline{WKP}_1$ is low and WEGR bit WKEGS1 = 0. When PMR5 bit WKP1 is changed from 1 to 0 while pin $\overline{WKP}_1$ is low and WEGR bit WKEGS1 = 1.
	IWPF0	When PMR5 bit WKP0 is changed from 0 to 1 while pin $\overline{WKP}_0$ is low and WEGR bit WKEGS0 = 0. When PMR5 bit WKP0 is changed from 1 to 0 while pin $\overline{WKP}_0$ is low and WEGR bit WKEGS0 = 1.

Figure 3.7 shows the procedure for setting a bit in a port mode register and clearing the interrupt request flag.

When switching a pin function, mask the interrupt before setting the bit in the port mode register (or AEGSR). After accessing the port mode register (or AEGSR), execute at least one instruction (e.g., NOP), then clear the interrupt request flag from 1 to 0. If the instruction to clear the flag is

executed immediately after the port mode register (or AEGSR) access without executing an intervening instruction, the flag will not be cleared.

An alternative method is to avoid the setting of interrupt request flags when pin functions are switched by keeping the pins at the high level so that the conditions in table 3.5 do not occur.

However, the procedure in Figure 3.7 is recommended because IECPWM is an internal signal and determining its value is complicated.

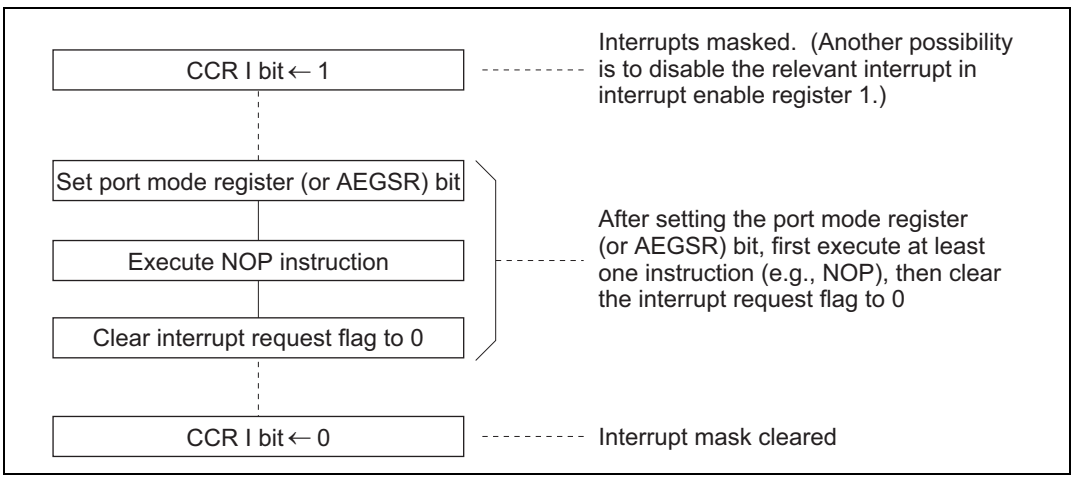

Figure 3.7 Port Mode Register (or AEGSR) Setting and Interrupt Request Flag Clearing Procedure

3.4.3 Method for Clearing Interrupt Request Flags

Use the recommended method, given below when clearing the flags of interrupt request registers (IRR1, IRR2, IWPR).

- Recommended method

  Use a single instruction to clear flags. The bit control instruction and byte-size data transfer instruction can be used. Two examples of program code for clearing IRRI1 (bit 1 of IRR1) are given below.

```
BCLR  #1,  @IRR1:8
MOV.B R1L, @IRR1:8 (set the value of R1L to B'11111101)
```

- Example of a malfunction

  When flags are cleared with multiple instructions, other flags might be cleared during execution of the instructions, even though they are currently set, and this will cause a malfunction.

  Here is an example in which IRRI0 is cleared and disabled in the process of clearing IRRI1 (bit 1 of IRR1).

```
MOV.B @IRR1:8,R1L ......... IRRI0 = 0 at this time
AND.B #B'11111101,R1L ..... Here, IRRI0 = 1
MOV.B R1L,@IRR1:8 ......... IRRI0 is cleared to 0
```

  In the above example, it is assumed that an IRQ0 interrupt is generated while the AND.B instruction is executing.

  The IRQ0 interrupt is disabled because, although the original objective is clearing IRRI1, IRRI0 is also cleared.

Section 4 Clock Pulse Generators

4.1 Overview

Clock oscillator circuitry (CPG: clock pulse generator) is provided on-chip, including both a system clock pulse generator and a subclock pulse generator. The system clock pulse generator consists of a system clock oscillator and system clock dividers. The subclock pulse generator consists of a subclock oscillator circuit and a subclock divider.

In the H8/38124 Group, the system clock pulse generator includes an on-chip oscillator.

4.1.1 Block Diagram

Figure 4.1 shows a block diagram of the clock pulse generators of the H8/38024, H8/38024S, and H8/38024R Group. Figure 4.2 shows a block diagram of the clock pulse generators of the H8/38124 Group.

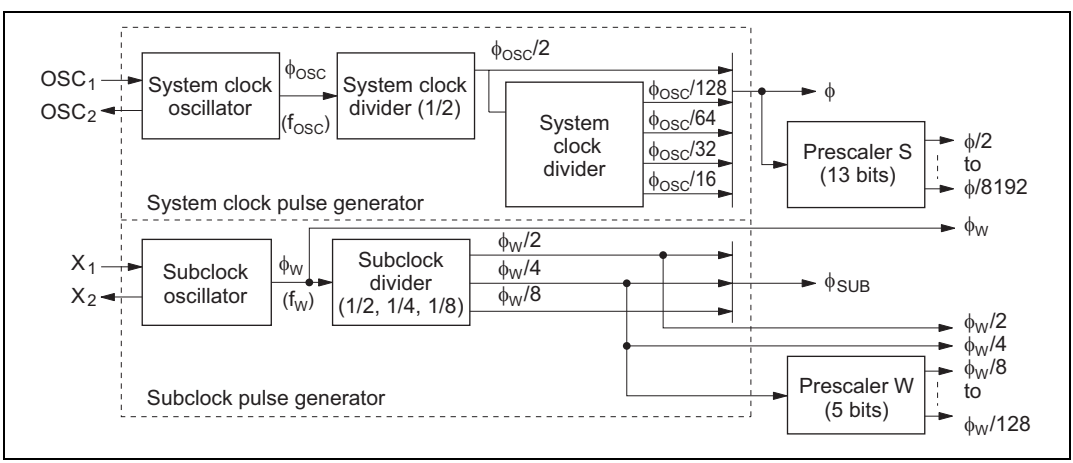

Figure 4.1(1) Block Diagram of Clock Pulse Generators (H8/38024 Group, H8/38024S Group, H8/38024R Group)

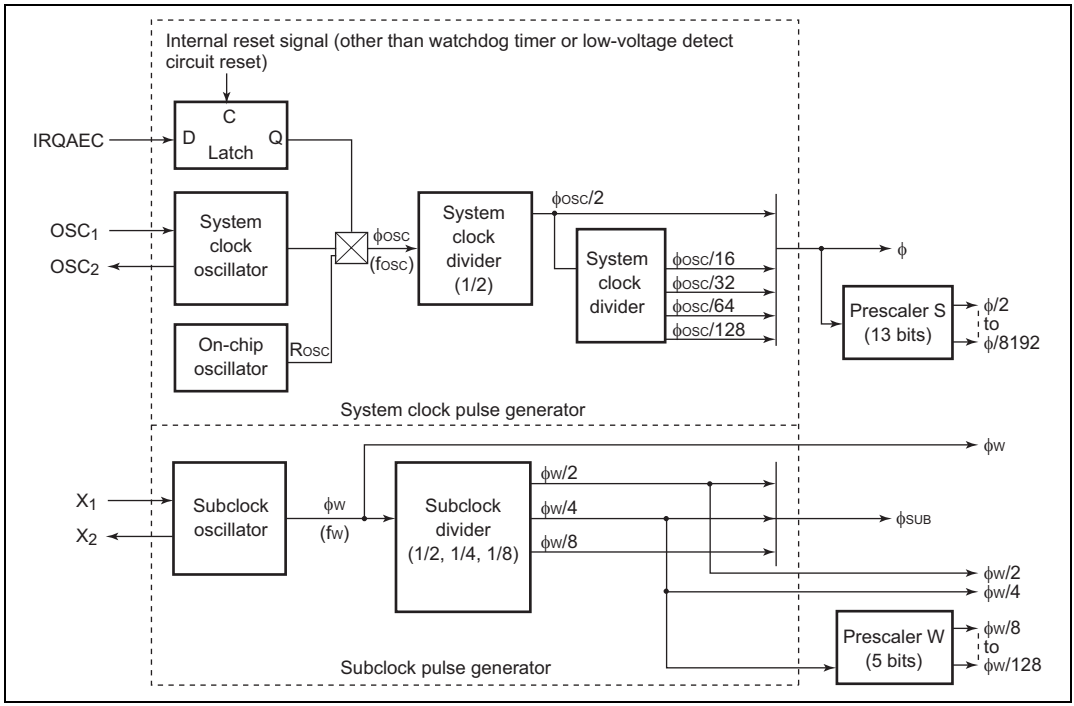

Figure 4.2 Block Diagram of Clock Pulse Generators (H8/38124 Group)

4.1.2 System Clock and Subclock

The basic clock signals that drive the CPU and on-chip peripheral modules are ϕ and ϕ_{SUB}. Four of the clock signals have names: ϕ is the system clock, ϕ_{SUB} is the subclock, ϕ_{OSC} is the oscillator clock, and ϕ_W is the watch clock.

The clock signals available for use by peripheral modules are $\phi/2$, $\phi/4$, $\phi/8$, $\phi/16$, $\phi/32$, $\phi/64$, $\phi/128$, $\phi/256$, $\phi/512$, $\phi/1024$, $\phi/2048$, $\phi/4096$, $\phi/8192$, ϕ_W, $\phi_W/2$, $\phi_W/4$, $\phi_W/8$, $\phi_W/16$, $\phi_W/32$, $\phi_W/64$, and $\phi_W/128$. The clock requirements differ from one module to another.

4.1.3 Register Descriptions

Table 4.1 lists the registers that control the clock pulse generators. The registers listed in table 4.1 are only implemented in the H8/38124 Group.

Table 4.1 Clock Pulse Generator Control Registers

Name	Abbreviation	R/W	Initial Value	Address
Clock pulse generator control register	OSCCR	R/W	—	H'FFF5

Clock Pulse Generator Control Register (OSCCR)

Bit	7	6	5	4	3	2	1	0
	SUBSTP	—	—	—	—	IRQAECF	OSCF	—
Initial value	0	0	0	0	0	—	—	0
Read/Write	R/W	R	R/W	R/W	R/W	R	R	R/W

OSCCR is an 8-bit read/write register that contains the flag indicating the selection of system clock oscillator or on-chip oscillator, indicates the input level of the IRQAEC pin during resets, and controls whether the subclock oscillator operates or not.

Bit 7—Subclock Oscillator Stop Control (SUBSTP)

Bit 7 controls whether the subclock oscillator operates or not. It can be set to 1 only in the active mode (high-speed/medium-speed). Setting bit 7 to 1 in the subactive mode will cause the LSI to stop operating.

Bit 7 SUBSTP	Description	
0	Subclock oscillator operates	(initial value)
1	Subclock oscillator stopped	

Bit 6—Reserved

This bit is reserved. It is always read as 0 and cannot be written to.

Bits 5 to 3—Reserved

These bits are read/write enabled reserved bits.

Bit 2—IRQAEC Flag (IRQAECF)

This bit indicates the IRQAEC pin input level set during resets.

Bit 2 IRQAECF	Description
0	IRQAEC pin set to GND during resets
1	IRQAEC pin set to V_{CC} during resets

Bit 1—OSC Flag (OSCF)

This bit indicates the oscillator operating with the system clock pulse generator.

Bit 1 OSCF	Description
0	System clock oscillator operating (on-chip oscillator stopped)
1	On-chip oscillator operating (system clock oscillator stopped)

Bit 0—Reserved

This bit is reserved. Never write 1 to this bit, as it can cause the LSI to malfunction.

4.2 System Clock Generator

Clock pulses can be supplied to the system clock divider either by connecting a crystal or ceramic oscillator, or by providing external clock input. As shown in figure 4.2, the H8/38124 Group supports selection between a system clock oscillator and an on-chip oscillator. See section 4.2, On-Chip Oscillator Selection Method, for information on selecting the on-chip oscillator.

Connecting a Crystal Oscillator

Figure 4.3(1) shows a typical method of connecting a crystal oscillator to the H8/38024 or H8/38024R Group, and figure 4.3(2) shows a typical method of connecting a crystal oscillator to the H8/38024S and H8/38124 Group.

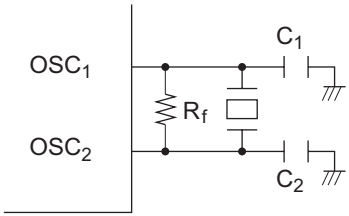

R_f = 1 MΩ ±20%

Frequency	Crystal oscillator	C_1, C_2 Recommendation value
4.19 MHz	NDK	12 pF ±20%

Note: Circuit constants should be determined in consultation with the resonator manufacturer.

Figure 4.3(1) Typical Connection to Crystal Oscillator (H8/38024, H8/38024R Group)

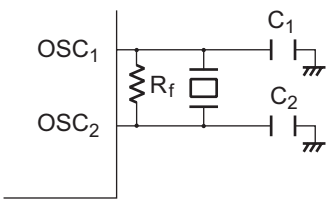

R_f = 1 MΩ ±20%

Frequency	Crystal oscillator	Products name	C_1, C_2 Recommendation value
4.0 MHz	NDK	NR-18	12 pF ±20%

Note: Circuit constants should be determined in consultation with the resonator manufacturer.

Figure 4.3(2) Typical Connection to Crystal Oscillator (H8/38024S, H8/38124 Group)

Figure 4.3 shows the equivalent circuit of a crystal oscillator. An oscillator having the characteristics given in table 4.2 should be used.

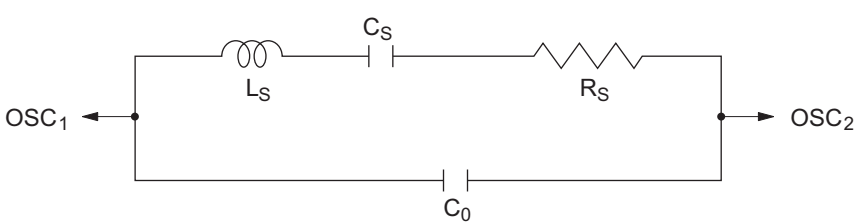

Figure 4.4 Equivalent Circuit of Crystal Oscillator

Table 4.2 Crystal Oscillator Parameters

Frequency (MHz)	4	4.193
RS max (Ω)	100	100
C_0 max (pF)	16	16

Connecting a Ceramic Oscillator

Figure 4.5(1) shows a typical method of connecting a ceramic oscillator to the H8/38024 or H8/38024R Group, and figure 4.5(2) shows a typical method of connecting a crystal oscillator to the H8/38024S and H8/38124 Group.

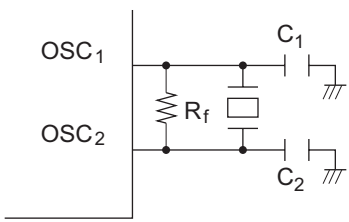

R_f = 1 MΩ ±20%

Frequency	Ceramic oscillator	C_1, C_2 Recommendation value
4.0 MHz	Murata	30 pF ±10%

Figure 4.5(1) Typical Connection to Ceramic Oscillator (H8/38024, H8/38024R Group)

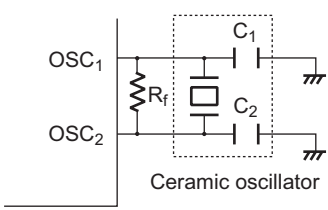

R_f = 1 MΩ ±20%

Frequency	Ceramic oscillator	Products name	C_1, C_2 Recommendation value
2.0 MHz	Murata	CSTCC2M00G53-B0	15 pF ±20%
		CSTCC2M00G56-B0	47 pF ±20%
10.0 MHz		CSTLS10M0G53-B0	15 pF ±20%
		CSTLS10M0G56-B0	47 pF ±20%
16.0 MHz*1		CSTLS16M0X53-B0	15 pF ±20%
20.0 MHz*2		CSTLS20M0X53-B0	15 pF ±20%

Notes: Circuit constants should be determined in consultation with the resonator manufacturer.
1. This does not apply to the H8/38024S Group.
2. H8/38124 Group only

Figure 4.5(2) Typical Connection to Ceramic Oscillator (H8/38024S, H8/38124 Group)

Notes on Board Design

When generating clock pulses by connecting a crystal or ceramic oscillator, pay careful attention to the following points.

Avoid running signal lines close to the oscillator circuit, since the oscillator may be adversely affected by induction currents. (See figure 4.6.)

The board should be designed so that the oscillator and load capacitors are located as close as possible to pins OSC_1 and OSC_2.

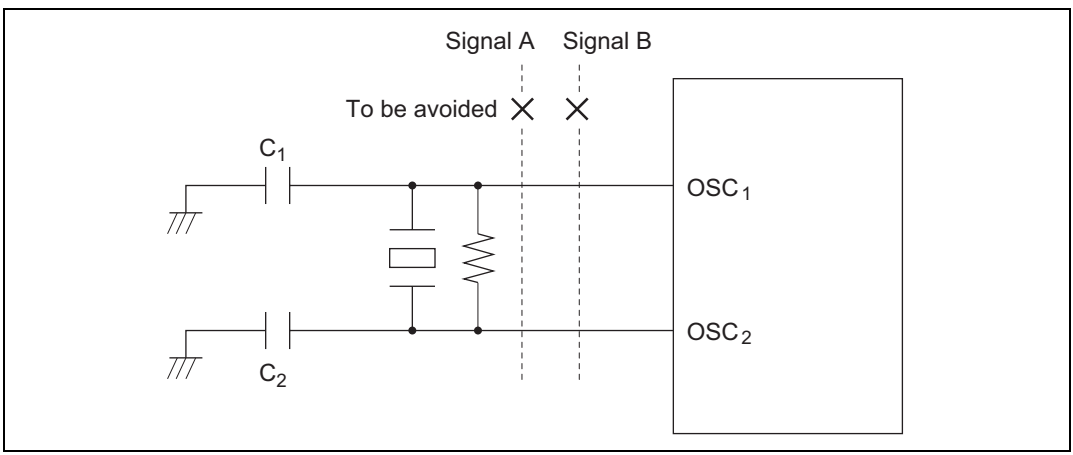

Figure 4.6 Board Design of Oscillator Circuit

Note: The circuit parameters above are recommended by the crystal or ceramic oscillator manufacturer.
The circuit parameters are affected by the crystal or ceramic oscillator and floating capacitance when designing the board. When using the oscillator, consult with the crystal or ceramic oscillator manufacturer to determine the circuit parameters.

External Clock Input Method

Connect an external clock signal to pin OSC_1, and leave pin OSC_2 open. Figure 4.7 shows a typical connection.

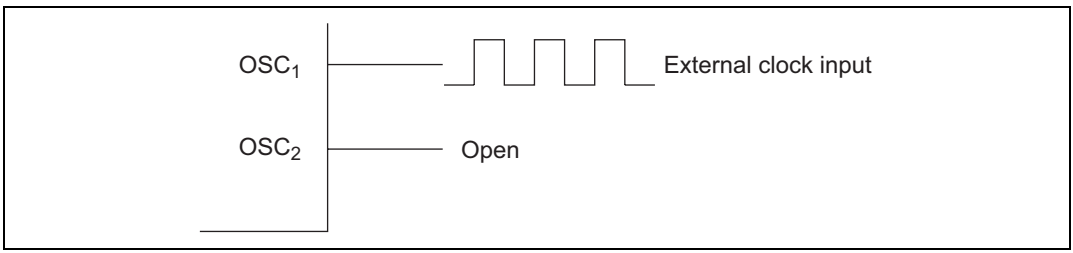

Figure 4.7 External Clock Input (Example)

Frequency	Oscillator Clock (ϕ_{osc})
Duty cycle	45% to 55%

On-Chip Oscillator Selection Method (H8/38124 Group Only)

The on-chip oscillator is selected by setting the IRQAEC pin input level during resets.* Table 4.3 lists the methods for selecting the system clock oscillator and the on-chip oscillator. The IRQAEC pin input level set during resets must be fixed at V_{CC} or GND, based on the oscillator to be selected. It is not necessary to connect an oscillator to pins OSC1 and OSC2 if the on-chip oscillator is selected. In this case, pin OSC1 should be fixed at V_{CC} or GND.

Note: The system clock oscillator must be selected in order to program or erase flash memory as part of operations such as on-board programming. Also, when using the on-chip emulator, an oscillator should be connected, or an external clock input, even if the on-chip oscillator is selected.

* Other than watchdog timer or low-voltage detect circuit reset.

Table 4.3 System Clock Oscillator and On-Chip Oscillator Selection Methods

IRQAEC pin input level (during resets)	0	1
System clock oscillator	Enabled	Disabled
On-chip oscillator	Disabled	Enabled

4.3 Subclock Generator

Connecting a 32.768 kHz/38.4 kHz Crystal Oscillator

Clock pulses can be supplied to the subclock divider by connecting a 32.768 kHz/38.4 kHz crystal oscillator, as shown in figure 4.8. Follow the same precautions as noted under 3. notes on board design for the system clock in section 4.2.

Note that only operation at 32.768 kHz is guaranteed on the H8/38124 Group.

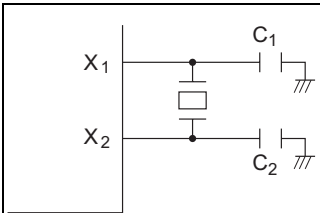

$C^1 = C^2 = 15$ pF (typ.)

Frequency	Crystal oscillator	Products Name
38.4 kHz	Seiko Instruments Inc.	VTC-200
32.768 kHz	Nihon Denpa Kogyo	MX73P

$C^1 = C^2 = 7$ pF (typ.)

Frequency	Crystal oscillator	Products Name	Motion Resistance
32.768 kHz*	EPSON TOYOCOM.	C-001R	35 kΩ max

Notes: Circuit constants should be detemined in consultation with the resonator manufacture.
* H8/38124 Group only.

Figure 4.8 Typical Connection to 32.768 kHz/38.4 kHz Crystal Oscillator (Subclock)

Figure 4.9 shows the equivalent circuit of the 32.768 kHz/38.4 kHz crystal oscillator.

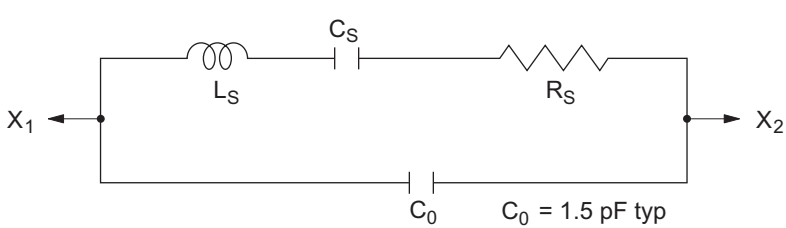

$C_0 = 1.5$ pF typ
$R_S = 14$ kΩ typ
$f_W = 32.768$ kHz/38.4 kHz

Figure 4.9 Equivalent Circuit of 32.768 kHz/38.4 kHz Crystal Oscillator

Pin Connection when Not Using Subclock

When the subclock is not used, connect pin X_1 to GND and leave pin X_2 open, as shown in figure 4.10.

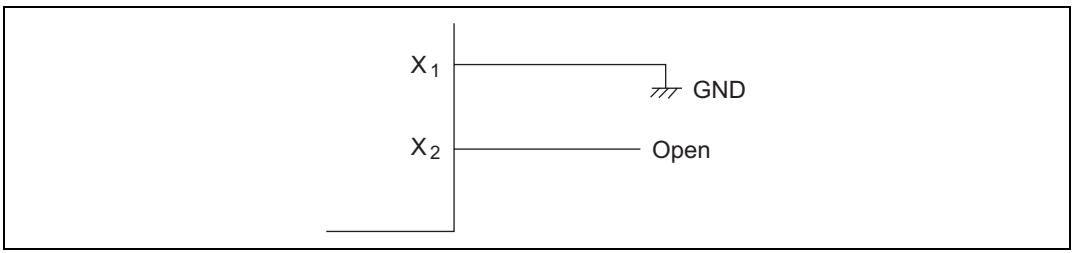

Figure 4.10 Pin Connection when not Using Subclock

External Clock Input

Connect the external clock to the X1 pin and leave the X2 pin open, as shown in figure 4.11.

Note that no external clock should be input to the H8/38124 Group.

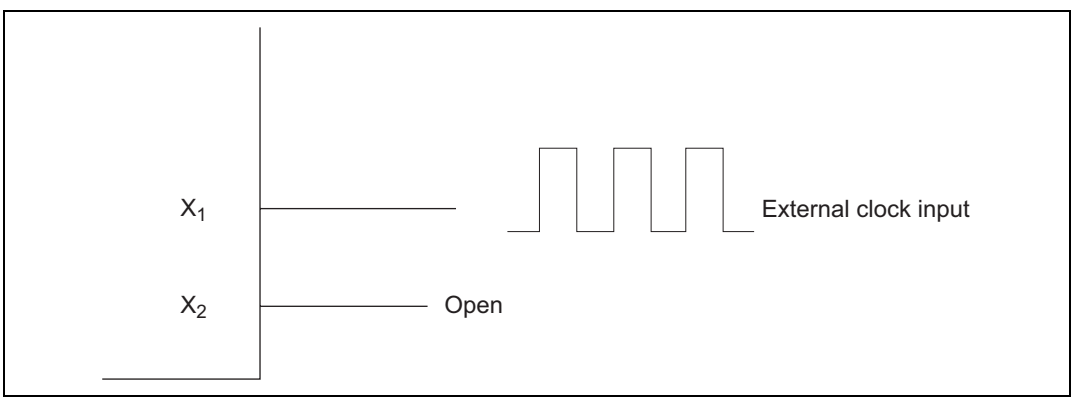

Figure 4.11 Pin Connection when Inputting External Clock

Frequency	Subclock (ϕw)
Duty	45% to 55%

Method for Disabling Subclock Oscillator (H8/38124 Group Only)

The subclock oscillator can be disabled by programs by setting the SUBSTP bit in the OSCCR register to 1. The register setting to disable the subclock oscillator should be made in the active mode. When restoring operation of the subclock oscillator after it has been disabled using the OSCCR register, it is necessary to wait for the oscillation stabilization time (typ: 8s) to elapse before using the subclock.

4.4 Prescalers

The H8/38024 Group is equipped with two on-chip prescalers having different input clocks (prescaler S and prescaler W). Prescaler S is a 13-bit counter using the system clock (ϕ) as its input clock. Its prescaled outputs provide internal clock signals for on-chip peripheral modules. Prescaler W is a 5-bit counter using a 32.768 kHz or 38.4 kHz signal divided by 4 ($\phi_W/4$) as its input clock. Its prescaled outputs are used by timer A as a time base for timekeeping.

Prescaler S (PSS)

Prescaler S is a 13-bit counter using the system clock (ϕ) as its input clock. It is incremented once per clock period.

Prescaler S is initialized to H'0000 by a reset, and starts counting on exit from the reset state.

In standby mode, watch mode, subactive mode, and subsleep mode, the system clock pulse generator stops. Prescaler S also stops and is initialized to H'0000.

The CPU cannot read or write prescaler S.

The output from prescaler S is shared by timer A, timer C, timer F, timer G, SCI3, the A/D converter, the LCD controller, watchdog timer, and the 10-bit PWM. The divider ratio can be set separately for each on-chip peripheral function.

In active (medium-speed) mode the clock input to prescaler S is ϕosc/16, ϕosc/32, ϕosc/64, or ϕosc/128.

Prescaler W (PSW)

Prescaler W is a 5-bit counter using a 32.768 kHz/38.4 kHz signal divided by 4 ($\phi_W/4$) as its input clock.

Prescaler W is initialized to H'00 by a reset, and starts counting on exit from the reset state.

Even in standby mode, watch mode, subactive mode, or subsleep mode, prescaler W continues functioning so long as clock signals are supplied to pins X1 and X2.

Prescaler W can be reset by setting 1s in bits TMA3 and TMA2 of timer mode register A (TMA).

Output from prescaler W can be used to drive timer A, in which case timer A functions as a time base for timekeeping.

4.5 Note on Oscillators

Oscillator characteristics are closely related to board design and should be carefully evaluated by the user in mask ROM and ZTAT versions, referring to the examples shown in this section. Oscillator circuit constants will differ depending on the oscillator element, stray capacitance in its interconnecting circuit, and other factors. Suitable constants should be determined in consultation with the oscillator element manufacturer. Design the circuit so that the oscillator element never receives voltages exceeding its maximum rating.

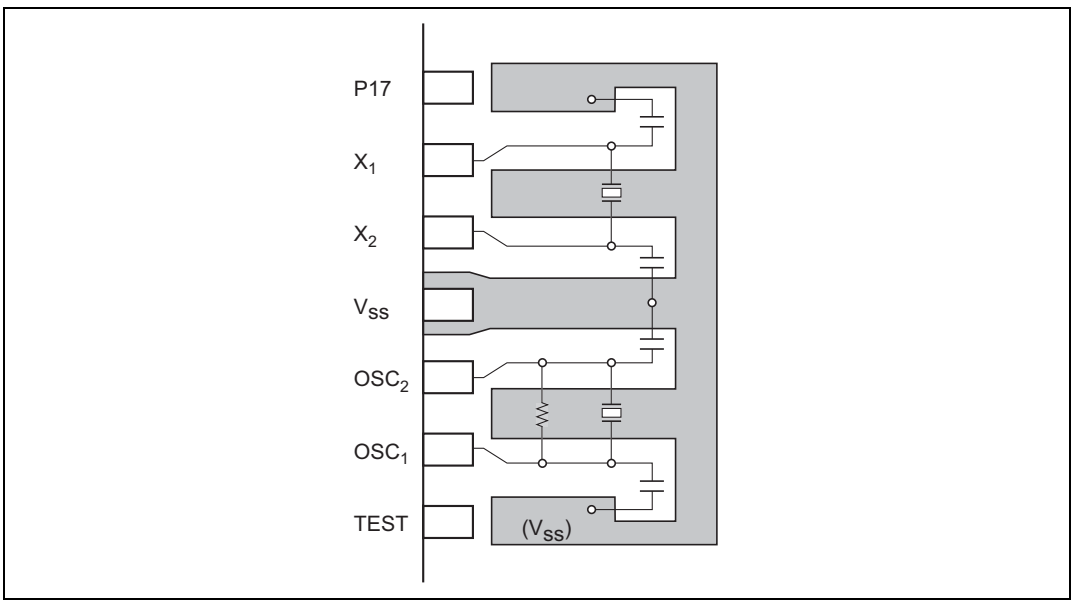

Figure 4.12 Example of Crystal and Ceramic Oscillator Element Arrangement

Figure 4.13 (1) shows an example measuring circuit with the negative resistance suggested by the resonator manufacturer. Note that if the negative resistance of the circuit is less than that suggested by the resonator manufacturer, it may be difficult to start the main oscillator.

If it is determined that oscillation is not occurring because the negative resistance is lower than the level suggested by the resonator manufacturer, the circuit may be modified as shown in figure 4.13 (2) through (4). Which of the modification suggestions to use and the capacitor capacitance should be decided based upon an evaluation of factors such as the negative resistance and the frequency deviation.

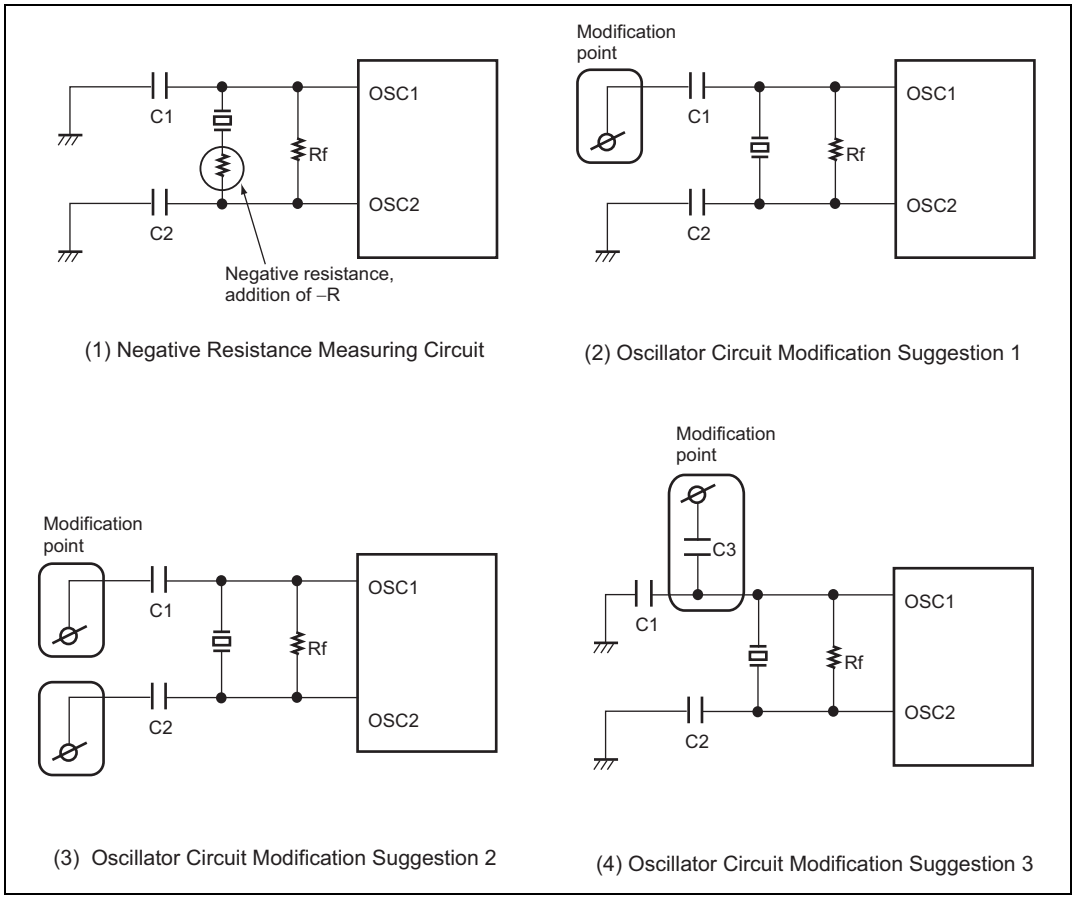

Figure 4.13 Negative Resistance Measurement and Circuit Modification Suggestions

4.5.1 Definition of Oscillation Stabilization Wait Time

Figure 4.14 shows the oscillation waveform (OSC2), system clock (ϕ), and microcomputer operating mode when a transition is made from standby mode, watch mode, or subactive mode, to active (high-speed/medium-speed) mode, with an oscillator element connected to the system clock oscillator.

As shown in figure 4.13, as the system clock oscillator is halted in standby mode, watch mode, and subactive mode, when a transition is made to active (high-speed/medium-speed) mode, the sum of the following two times (oscillation stabilization time and wait time) is required.

1. Oscillation stabilization time (t_{rc})

The time from the point at which the system clock oscillator oscillation waveform starts to change when an interrupt is generated, until the amplitude of the oscillation waveform increases and the oscillation frequency stabilizes.

2. Wait time

The time required for the CPU and peripheral functions to begin operating after the oscillation waveform frequency and system clock have stabilized.

The wait time setting is selected with standby timer select bits 2 to 0 (STS2 to STS0) (bits 6 to 4 in system control register 1 (SYSCR1)).

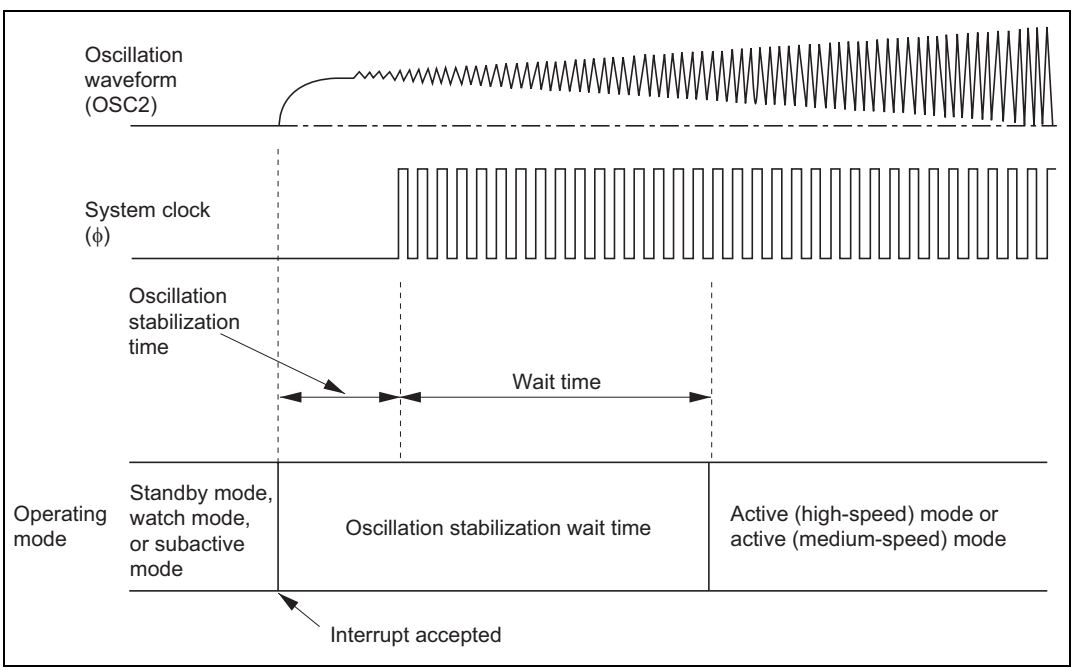

Figure 4.14 Oscillation Stabilization Wait Time

When standby mode, watch mode, or subactive mode is cleared by an interrupt or reset, and a transition is made to active (high-speed/medium-speed) mode, the oscillation waveform begins to change at the point at which the interrupt is accepted. Therefore, when an oscillator element is connected in standby mode, watch mode, or subactive mode, since the system clock oscillator is halted, the time from the point at which this oscillation waveform starts to change until the

amplitude of the oscillation waveform increases and the oscillation frequency stabilizes—that is, the oscillation stabilization time—is required.

The oscillation stabilization time in the case of these state transitions is the same as the oscillation stabilization time at power-on (the time from the point at which the power supply voltage reaches the prescribed level until the oscillation stabilizes), specified by "oscillation stabilization time t_{rc}" in the AC characteristics.

Meanwhile, once the system clock has halted, a wait time of at least 8 states is necessary in order for the CPU and peripheral functions to operate normally.

Thus, the time required from interrupt generation until operation of the CPU and peripheral functions is the sum of the above described oscillation stabilization time and wait time. This total time is called the oscillation stabilization wait time, and is expressed by equation (1) below.

Oscillation stabilization wait time = oscillation stabilization time + wait time

$$= t_{rc} + \begin{matrix}(8 \text{ to } 16{,}384 \text{ states})^{*1} \\ (\text{up to } 131{,}072 \text{ states})^{*2}\end{matrix} \quad \text{..... (1)}$$

Notes: 1. H8/38024 Group
2. H8/38124 Group

Therefore, when a transition is made from standby mode, watch mode, or subactive mode, to active (high-speed/medium-speed) mode, with an oscillator element connected to the system clock oscillator, careful evaluation must be carried out on the installation circuit before deciding on the oscillation stabilization wait time. In particular, since the oscillation stabilization time is affected by installation circuit constants, stray capacitance, and so forth, suitable constants should be determined in consultation with the oscillator element manufacturer.

4.5.2 Notes on Use of Crystal Oscillator Element (Excluding Ceramic Oscillator Element)

When a microcomputer operates, the internal power supply potential fluctuates slightly in synchronization with the system clock. Depending on the individual crystal oscillator element characteristics, the oscillation waveform amplitude may not be sufficiently large immediately after the oscillation stabilization wait time, making the oscillation waveform susceptible to influence by fluctuations in the power supply potential. In this state, the oscillation waveform may be disrupted, leading to an unstable system clock and erroneous operation of the microcomputer.

If erroneous operation occurs, change the setting of standby timer select bits 2 to 0 (STS2 to STS0) (bits 6 to 4 in system control register 1 (SYSCR1)) to give a longer wait time.

For example, if erroneous operation occurs with a wait time setting of 16 states, check the operation with a wait time setting of 1,024* states or more.

If the same kind of erroneous operation occurs after a reset as after a state transition, hold the $\overline{\text{RES}}$ pin low for a longer period.

Note: * This figure applies to the H8/38024, H8/38024S, and H8/38024R Groups. The number of states on the H8/38124 Group is 8,192 or more.

4.5.3 Note on Use of HD64F38024

When using the HD64F38024, the oscillators may not operate if an initial voltage of 10 mV is applied to the V_{CC} pin during power-on. This problem is caused by uncertainty about the state of the oscillation control signals. It can be corrected by cutting off power and allowing the V_{CC} pin voltage to drop to ground potential before powering-on once again.

4.6 Notes on H8/38124 Group

When using the on-chip emulator, system clock precision is necessary for programming or erasing the flash memory. However, the on-chip oscillator frequency can vary due to changes in conditions such as voltage or temperature. Consequently, even if the on-chip oscillator is selected when using the on-chip emulator, pins OSC1 and OSC2 should be connected to an oscillator, or an external clock should be supplied. In this case, the LSI uses the on-chip oscillator when user programs are being executed and the system clock oscillator when programming or erasing flash memory. The process is controlled by the on-chip emulator.

Section 5 Power-Down Modes

5.1 Overview

The LSI has nine modes of operation after a reset. These include eight power-down modes, in which power dissipation is significantly reduced. Table 5.1 gives a summary of the nine operating modes.

Table 5.1 Operating Modes

Operating Mode	Description
Active (high-speed) mode	The CPU and all on-chip peripheral functions are operable on the system clock in high-speed operation
Active (medium-speed) mode	The CPU and all on-chip peripheral functions are operable on the system clock in low-speed operation
Subactive mode	The CPU and all on-chip peripheral functions are operable on the subclock in low-speed operation
Sleep (high-speed) mode	The CPU halts. On-chip peripheral functions are operable on the system clock
Sleep (medium-speed) mode	The CPU halts. On-chip peripheral functions operate at a frequency of 1/128, 1/64, 1/32, or 1/16 of the system clock frequency
Subsleep mode	The CPU halts. The time-base function of timer A, timer C, timer F, timer G, SCI3, AEC, and LCD controller/driver are operable on the subclock
Watch mode	The CPU halts. The time-base function of timer A, timer F, timer G, AEC and LCD controller/driver are operable on the subclock
Standby mode	The CPU and all on-chip peripheral functions halt
Module standby mode	Individual on-chip peripheral functions specified by software enter standby mode and halt

Of these nine operating modes, all but the active (high-speed) mode are power-down modes. In this section the two active modes (high-speed and medium speed) will be referred to collectively as active mode.

Figure 5.1 shows the transitions among these operation modes. Table 5.2 indicates the internal states in each mode.

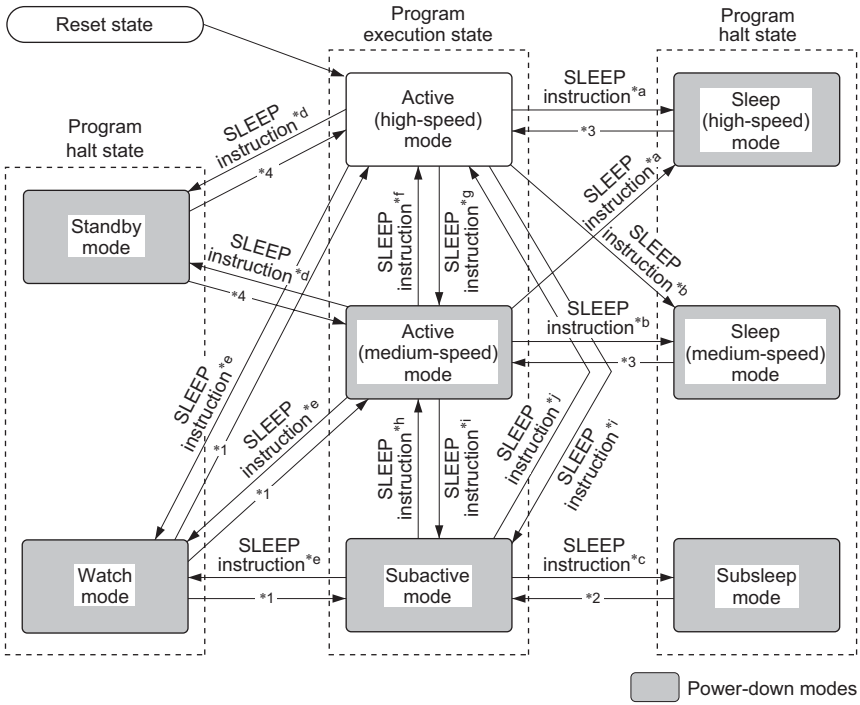

Mode Transition Conditions (1)

	LSON	MSON	SSBY	TMA3	DTON
*a	0	0	0	*	0
*b	0	1	0	*	0
*c	1	*	0	1	0
*d	0	*	1	0	0
*e	*	*	1	1	0
*f	0	0	0	*	1
*g	0	1	0	*	1
*h	0	1	1	1	1
*i	1	*	1	1	1
*j	0	0	1	1	1

*: Don't care

Mode Transition Conditions (2)

	Interrupt Sources
*1	Timer A, Timer F, Timer G interrupt, IRQ0 interrupt, WKP7 to WKP0 interrupts
*2	Timer A, Timer C, Timer F, Timer G, SCI3 interrupt, IRQ4, IRQ3, IRQ1 and IRQ0 interrupts, IRQAEC, WKP7 to WKP0 interrupts, AEC
*3	All interrupts
*4	IRQ1 or IRQ0 interrupt, WKP7 to WKP0 interrupts

Notes: 1. A transition between different modes cannot be made to occur simply because an interrupt request is generated. Make sure that interrupts are enabled.
2. Details on the mode transition conditions are given in the explanations of each mode, in sections 5.2 to 5.8.

Figure 5.1 Mode Transition Diagram

Table 5.2 Internal State in Each Operating Mode

Function		Active Mode High-Speed	Active Mode Medium-Speed	Sleep Mode High-Speed	Sleep Mode Medium-Speed	Watch Mode	Subactive Mode	Subsleep Mode	Standby Mode
System clock oscillator		Functions	Functions	Functions	Functions	Halted	Halted	Halted	Halted
Subclock oscillator		Functions	Functions	Functions	Functions	Functions	Functions	Functions	Functions
CPU operations	Instructions	Functions	Functions	Halted	Halted	Halted	Functions	Halted	Halted
	RAM			Retained	Retained	Retained		Retained	Retained
	Registers								
	I/O ports								Retained*1
External interrupts	IRQ_0	Functions	Functions	Functions	Functions	Functions	Functions	Functions	Functions
	IRQ_1					Retained*6			
	IRQAEC								Retained*6
	IRQ_3								
	IRQ_4								
	WKP_0	Functions	Functions	Functions	Functions	Functions	Functions	Functions	Functions
	WKP_1								
	WKP_2								
	WKP_3								
	WKP_4								
	WKP_5								
	WKP_6								
	WKP_7								
Peripheral functions	Timer A	Functions	Functions	Functions	Functions	Functions*5	Functions*5	Functions*5	Retained
	Asynchronous event counter					Functions*8	Functions	Functions	Functions*8
	Timer C					Retained	Functions/ Retained*2	Functions/ Retained*2	Retained
	WDT					Functions/ Retained*10	Functions/ Retained*7	Functions/ Retained*10	Functions/ Retained*11
	Timer F Timer G					Functions/ Retained*9	Functions/ Retained*9	Functions/ Retained*9	Retained
	SCI3					Reset	Functions/ Retained*3	Functions/ Retained*3	Reset
	PWM					Retained	Retained	Retained	Retained
	A/D converter					Retained	Retained	Retained	Retained
	LCD					Functions/ Retained*4	Functions/ Retained*4	Functions/ Retained*4	Retained
	LVD	Functions	Functions	Functions	Functions	Functions	Functions	Functions	Functions

Notes:
1. Register contents are retained, but output is high-impedance state. Port 5 of the HD64F38024 retains the previous pin state.
2. Functions if an external clock or the $\phi_W/4$ internal clock is selected; otherwise halted and retained.
3. Functions if $\phi_W/2$ is selected as the internal clock; otherwise halted and retained.
4. Functions if ϕ_W, $\phi_W/2$ or $\phi_W/4$ is selected as the operating clock; otherwise halted and retained.
5. Functions if the timekeeping time-base function is selected.
6. External interrupt requests are ignored. Interrupt request register contents are not altered.
7. On the H8/38124 Group, operates when $\phi_W/32$ is selected as the internal clock or the on-chip oscillator is selected; otherwise stops and stands by. On the H8/38024, H8/38024S, and H8/38024R Group, operates when $\phi_W/32$ is selected as the internal clock; otherwise stops and stands by.
8. Incrementing is possible, but interrupt generation is not.
9. Functions if $\phi_W/4$ is selected as the internal clock; otherwise halted and retained.
10. On the H8/38124 Group, operates when $\phi_W/32$ is selected as the internal clock or the on-chip oscillator is selected; otherwise stops and stands by. On the H8/38024, H8/38024S, and H8/38024R Group, stops and stands by.

11. On the H8/38124 Group, operates only when the on-chip oscillator is selected; otherwise stops and stands by. On the H8/38024, H8/38024S, and H8/38024R Group, stops and stands by.

5.1.1 System Control Registers

The operation mode is selected using the system control registers described in table 5.3.

Table 5.3 System Control Registers

Name	Abbreviation	R/W	Initial Value	Address
System control register 1	SYSCR1	R/W	H'07	H'FFF0
System control register 2	SYSCR2	R/W	H'F0	H'FFF1

System Control Register 1 (SYSCR1)

Bit	7	6	5	4	3	2	1	0
	SSBY	STS2	STS1	STS0	LSON	—	MA1	MA0
Initial value	0	0	0	0	0	1	1	1
Read/Write	R/W	R/W	R/W	R/W	R/W	—	R/W	R/W

SYSCR1 is an 8-bit read/write register for control of the power-down modes.

Upon reset, SYSCR1 is initialized to H'07.

Bit 7—Software Standby (SSBY)

This bit designates transition to standby mode or watch mode.

Bit 7 SSBY	Description
0	• When a SLEEP instruction is executed in active mode, a transition is made to sleep mode (initial value) • When a SLEEP instruction is executed in subactive mode, a transition is made to subsleep mode
1	• When a SLEEP instruction is executed in active mode, a transition is made to standby mode or watch mode • When a SLEEP instruction is executed in subactive mode, a transition is made to watch mode

Bits 6 to 4—Standby Timer Select 2 to 0 (STS2 to STS0)

These bits designate the time the CPU and peripheral modules wait for stable clock operation after exiting from standby mode or watch mode to active mode due to an interrupt. The designation should be made according to the operating frequency so that the waiting time is at least equal to the oscillation stabilization time. Note that stabilization times for the H8/38024, H8/38024S, and H8/38024R Group and for the H8/38124 Group are different.

- **H8/38024, H8/38024S, H8/38024R Group**

Bit 6 STS2	Bit 5 STS1	Bit 4 STS0	Description	
0	0	0	Wait time = 8,192 states	(initial value)
0	0	1	Wait time = 16,384 states	
0	1	0	Wait time = 1,024 states	
0	1	1	Wait time = 2,048 states	
1	0	0	Wait time = 4,096 states	
1	0	1	Wait time = 2 states	(External clock input mode)
1	1	0	Wait time = 8 states	
1	1	1	Wait time = 16 states	

- **H8/38124 Group**

Bit 6 STS2	Bit 5 STS1	Bit 4 STS0	Description	
0	0	0	Wait time = 8,192 states	(initial value)
0	0	1	Wait time = 16,384 states	
0	1	0	Wait time = 32,768 states	
0	1	1	Wait time = 65,536 states	
1	0	0	Wait time = 131,072 states	
1	0	1	Wait time = 2 states	(External clock input mode)
1	1	0	Wait time = 8 states	
1	1	1	Wait time = 16 states	

Note: If an external clock is being input, set standby timer select to external clock mode before mode transition. Also, do not set standby timer select to external clock mode if no external clock is used. 8,192 states (STS2 = STS1 = STS0 = 0) is recommended if the on-chip oscillator is used on the H8/38124 Group.

Bit 3—Low Speed on Flag (LSON)

This bit chooses the system clock (ϕ) or subclock (ϕ_{SUB}) as the CPU operating clock when watch mode is cleared. The resulting operation mode depends on the combination of other control bits and interrupt input.

Bit 3 LSON	Description	
0	The CPU operates on the system clock (ϕ)	(initial value)
1	The CPU operates on the subclock (ϕ_{SUB})	

Bit 2—Reserved

Bit 2 is reserved: it is always read as 1 and cannot be modified.

Bits 1 and 0—Active (Medium-Speed) Mode Clock Select (MA1, MA0)

Bits 1 and 0 choose $\phi_{osc}/128$, $\phi_{osc}/64$, $\phi_{osc}/32$, or $\phi_{osc}/16$ as the operating clock in active (medium-speed) mode and sleep (medium-speed) mode. MA1 and MA0 should be written in active (high-speed) mode or subactive mode.

Bit 1 MA1	Bit 0 MA0	Description	
0	0	$\phi_{osc}/16$	
0	1	$\phi_{osc}/32$	
1	0	$\phi_{osc}/64$	
1	1	$\phi_{osc}/128$	(initial value)

System Control Register 2 (SYSCR2)

Bit	7	6	5	4	3	2	1	0
	—	—	—	NESEL	DTON	MSON	SA1	SA0
Initial value	1	1	1	1	0	0	0	0
Read/Write	—	—	—	R/W	R/W	R/W	R/W	R/W

SYSCR2 is an 8-bit read/write register for power-down mode control.

Bits 7 to 5—Reserved

These bits are reserved; they are always read as 1, and cannot be modified.

Bit 4—Noise Elimination Sampling Frequency Select (NESEL)

This bit selects the frequency at which the watch clock signal (ϕ_W) generated by the subclock pulse generator is sampled, in relation to the oscillator clock (ϕ_{OSC}) generated by the system clock pulse generator. When ϕ_{OSC} = 2 to 20 MHz, clear NESEL to 0.

Bit 4 NESEL	Description	
0	Sampling rate is $\phi_{OSC}/16$	
1	Sampling rate is $\phi_{OSC}/4$	(initial value)

Bit 3—Direct Transfer on Flag (DTON)

This bit designates whether or not to make direct transitions among active (high-speed), active (medium-speed) and subactive mode when a SLEEP instruction is executed. The mode to which the transition is made after the SLEEP instruction is executed depends on a combination of other control bits.

Bit 3 DTON	Description	
0	• When a SLEEP instruction is executed in active mode, a transition is made to standby mode, watch mode, or sleep mode • When a SLEEP instruction is executed in subactive mode, a transition is made to watch mode or subsleep mode	(initial value)
1	• When a SLEEP instruction is executed in active (high-speed) mode, a direct transition is made to active (medium-speed) mode if SSBY = 0, MSON = 1, and LSON = 0, or to subactive mode if SSBY = 1, TMA3 = 1, and LSON = 1 • When a SLEEP instruction is executed in active (medium-speed) mode, a direct transition is made to active (high-speed) mode if SSBY = 0, MSON = 0, and LSON = 0, or to subactive mode if SSBY = 1, TMA3 = 1, and LSON = 1 • When a SLEEP instruction is executed in subactive mode, a direct transition is made to active (high-speed) mode if SSBY = 1, TMA3 = 1, LSON = 0, and MSON = 0, or to active (medium-speed) mode if SSBY = 1, TMA3 = 1, LSON = 0, and MSON = 1	

Bit 2—Medium Speed on Flag (MSON)

After standby, watch, or sleep mode is cleared, this bit selects active (high-speed) or active (medium-speed) mode.

Bit 2 MSON	Description	
0	Operation in active (high-speed) mode	(initial value)
1	Operation in active (medium-speed) mode	

Bits 1 and 0—Subactive Mode Clock Select (SA1, SA0)

These bits select the CPU clock rate ($\phi_W/2$, $\phi_W/4$, or $\phi_W/8$) in subactive mode. SA1 and SA0 cannot be modified in subactive mode.

Bit 1 SA1	Bit 0 SA0	Description	
0	0	$\phi_W/8$	(initial value)
0	1	$\phi_W/4$	
1	*	$\phi_W/2$	

*: Don’t care

5.2 Sleep Mode

5.2.1 Transition to Sleep Mode

1. Transition to sleep (high-speed) mode

   The system goes from active mode to sleep (high-speed) mode when a SLEEP instruction is executed while the SSBY and LSON bits in SYSCR1 are cleared to 0, the MSON and DTON bits in SYSCR2 are cleared to 0. In sleep mode CPU operation is halted but the on-chip peripheral functions. CPU register contents are retained.

2. Transition to sleep (medium-speed) mode

   The system goes from active mode to sleep (medium-speed) mode when a SLEEP instruction is executed while the SSBY and LSON bits in SYSCR1 are cleared to 0, the MSON bit in SYSCR2 is set to 1, and the DTON bit in SYSCR2 is cleared to 0. In sleep (medium-speed) mode, as in sleep (high-speed) mode, CPU operation is halted but the on-chip peripheral functions are operational. The clock frequency in sleep (medium-speed) mode is determined by the MA1 and MA0 bits in SYSCR1. CPU register contents are retained.

   Furthermore, it sometimes acts with half state early timing at the time of transition to sleep (medium-speed) mode.

5.2.2 Clearing Sleep Mode

Sleep mode is cleared by any interrupt (timer A, timer C, timer F, timer G, asynchronous event counter, IRQAEC, IRQ_4, IRQ_3, IRQ_1, IRQ_0, WKP_7 to WKP_0, SCI3, A/D converter), or by input at the $\overline{RES}$ pin.

- Clearing by interrupt

  When an interrupt is requested, sleep mode is cleared and interrupt exception handling starts. A transition is made from sleep (high-speed) mode to active (high-speed) mode, or from sleep (medium-speed) mode to active (medium-speed) mode. Sleep mode is not cleared if the I bit of the condition code register (CCR) is set to 1 or the particular interrupt is disabled in the interrupt enable register.

  To synchronize the interrupt request signal with the system clock, up to 2/ϕ(s) delay may occur after the interrupt request signal occurrence, before the interrupt exception handling start.

- Clearing by $\overline{RES}$ input

  When the $\overline{RES}$ pin goes low, the CPU goes into the reset state and sleep mode is cleared.

5.2.3 Clock Frequency in Sleep (Medium-Speed) Mode

Operation in sleep (medium-speed) mode is clocked at the frequency designated by the MA1 and MA0 bits in SYSCR1.

5.3 Standby Mode

5.3.1 Transition to Standby Mode

The system goes from active mode to standby mode when a SLEEP instruction is executed while the SSBY bit in SYSCR1 is set to 1, the LSON bit in SYSCR1 is cleared to 0, and bit TMA3 in TMA is cleared to 0. In standby mode the clock pulse generator stops, so the CPU and on-chip peripheral modules stop functioning, but as long as the rated voltage is supplied, the contents of CPU registers, on-chip RAM, and some on-chip peripheral module registers are retained. On-chip RAM contents will be further retained down to a minimum RAM data retention voltage. The I/O ports go to the high-impedance state. Port 5 of the HD64F38024 retains the previous pin state.

5.3.2 Clearing Standby Mode

Standby mode is cleared by an interrupt (IRQ_1 or IRQ_0), WKP_7 to WKP_0 or by input at the $\overline{RES}$ pin.

- Clearing by interrupt

  When an interrupt is requested, the system clock pulse generator starts. After the time set in bits STS2 to STS0 in SYSCR1 has elapsed, a stable system clock signal is supplied to the entire chip, standby mode is cleared, and interrupt exception handling starts. Operation resumes in active (high-speed) mode if MSON = 0 in SYSCR2, or active (medium-speed) mode if MSON = 1. Standby mode is not cleared if the I bit of CCR is set to 1 or the particular interrupt is disabled in the interrupt enable register.

- Clearing by $\overline{RES}$ input

  When the $\overline{RES}$ pin goes low, the system clock pulse generator starts. After the pulse generator output has stabilized, if the $\overline{RES}$ pin is driven high, the CPU starts reset exception handling. Since system clock signals are supplied to the entire chip as soon as the system clock pulse generator starts functioning, the $\overline{RES}$ pin should be kept at the low level until the pulse generator output stabilizes.

5.3.3 Oscillator Stabilization Time after Standby Mode Is Cleared

Bits STS2 to STS0 in SYSCR1 should be set as follows.

Note that stabilization times for the H8/38024, H8/38024S, and H8/38024R Group and for the H8/38124 Group are different.

- When a oscillator is used

  The table below gives settings for various operating frequencies. Set bits STS2 to STS0 for a wait time at least as long as the oscillation stabilization time.

Table 5.4(1) Clock Frequency and Stabilization Time (H8/38024, H8/38024S, H8/38024R Group)

(Unit: ms)

STS2	STS1	STS0	Wait Time	5 MHz	2 MHz
0	0	0	8,192 states	1.638	4.1
		1	16,384 states	3.277	8.2
	1	0	1,024 states	0.205	0.512
		1	2,048 states	0.410	1.024
1	0	0	4,096 states	0.819	2.048
		1	2 states (Use prohibited with other than external clock)	0.0004	0.001
	1	0	8 states	0.002	0.004
		1	16 states	0.003	0.008

Table 5.4(2) Clock Frequency and Stabilization Time (H8/38124 Group)

(Unit: ms)

STS2	STS1	STS0	Wait Time	5 MHz	2 MHz
0	0	0	8,192 states	1.638	4.1
		1	16,384 states	3.277	8.2
	1	0	32,768 states	6.554	16.4
		1	65,536 states	13.108	32.8
1	0	0	131,072 states	26.216	65.5
		1	2 states (Use prohibited with other than external clock)	0.0004	0.001
	1	0	8 states	0.002	0.004
		1	16 states	0.003	0.008

- When an external clock is used

  STS2 = 1, STS1 = 0, and STS0 = 1 should be set. Other values possible use, but CPU sometimes will start operation before wait time completion.

- When the on-chip oscillator is used

  8,192 states (STS2 = STS1 = STS0 = 0) is recommended if the on-chip oscillator is used on the H8/38124 Group.

5.3.4 Standby Mode Transition and Pin States

When a SLEEP instruction is executed in active (high-speed) mode or active (medium-speed) mode while bit SSBY is set to 1 and bit LSON is cleared to 0 in SYSCR1, and bit TMA3 is cleared to 0 in TMA, a transition is made to standby mode. At the same time, pins go to the high-impedance state (except pins for which the pull-up MOS is designated as on). Port 5 of the HD64F38024 retains the previous pin state. Figure 5.2 shows the timing in this case.

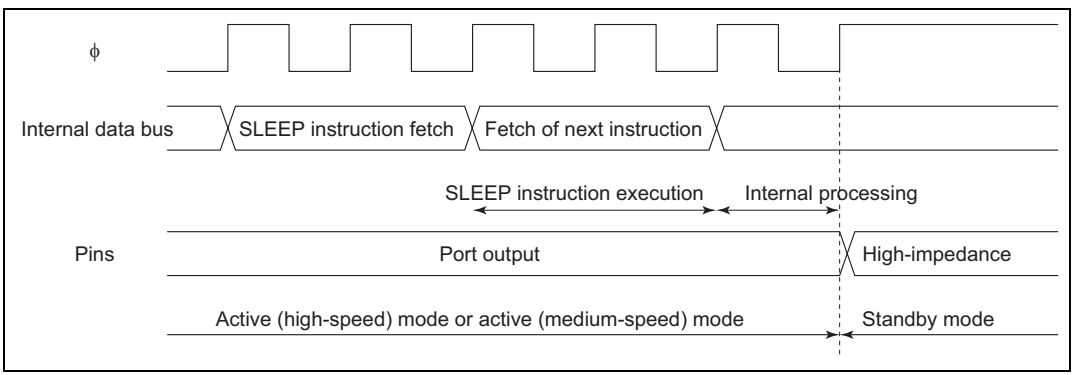

Figure 5.2 Standby Mode Transition and Pin States

5.3.5 Notes on External Input Signal Changes before/after Standby Mode

1. When external input signal changes before/after standby mode or watch mode

   When an external input signal such as $\overline{\text{IRQ}}$, $\overline{\text{WKP}}$, or IRQAEC is input, both the high- and low-level widths of the signal must be at least two cycles of system clock ϕ or subclock ϕ_{SUB} (referred to together in this section as the internal clock). As the internal clock stops in standby mode and watch mode, the width of external input signals requires careful attention when a transition is made via these operating modes. Ensure that external input signals conform to the conditions stated in 3, Recommended timing of external input signals, below

2. When external input signals cannot be captured because internal clock stops

   The case of falling edge capture is illustrated in figure 5.3.

   As shown in the case marked "Capture not possible," when an external input signal falls immediately after a transition to active (high-speed or medium-speed) mode or subactive mode, after oscillation is started by an interrupt via a different signal, the external input signal cannot be captured if the high-level width at that point is less than 2 t_{cyc} or 2 t_{subcyc}.

3. Recommended timing of external input signals

   To ensure dependable capture of an external input signal, high- and low-level signal widths of at least 2 t_{cyc} or 2 t_{subcyc} are necessary before a transition is made to standby mode or watch mode, as shown in “Capture possible: case 1” in figure 5.3.

   External input signal capture is also possible with the timing shown in “Capture possible: case 2” and “Capture possible: case 3” in figure 5.3, in which a 2 t_{cyc} or 2 t_{subcyc} level width is secured.

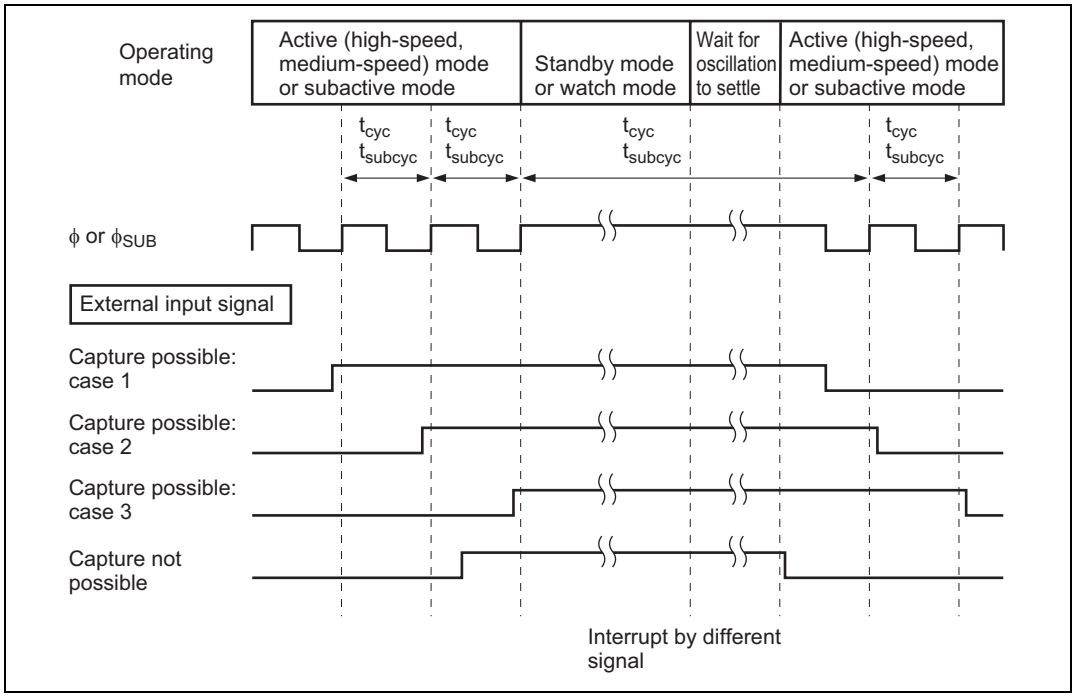

Figure 5.3 External Input Signal Capture when Signal Changes before/after Standby Mode or Watch Mode

4. Input pins to which these notes apply:
   $\overline{IRQ_4}$, $\overline{IRQ_3}$, $\overline{IRQ_1}$, $\overline{IRQ_0}$, $\overline{WKP_7}$ to $\overline{WKP_0}$, IRQAEC, TMIC, TMIF, TMIG, $\overline{ADTRG}$.

5.4 Watch Mode

5.4.1 Transition to Watch Mode

The system goes from active or subactive mode to watch mode when a SLEEP instruction is executed while the SSBY bit in SYSCR1 is set to 1 and bit TMA3 in TMA is set to 1.

In watch mode, operation of on-chip peripheral modules is halted except for timer A, timer F, timer G, AEC and the LCD controller/driver (for which operation or halting can be set) is halted. As long as a minimum required voltage is applied, the contents of CPU registers, the on-chip RAM and some registers of the on-chip peripheral modules, are retained. I/O ports keep the same states as before the transition.

5.4.2 Clearing Watch Mode

Watch mode is cleared by an interrupt (timer A, timer F, timer G, IRQ0, or WKP7 to WKP0) or by input at the $\overline{\text{RES}}$ pin.

- Clearing by interrupt

  When watch mode is cleared by interrupt, the mode to which a transition is made depends on the settings of LSON in SYSCR1 and MSON in SYSCR2. If both LSON and MSON are cleared to 0, transition is to active (high-speed) mode; if LSON = 0 and MSON = 1, transition is to active (medium-speed) mode; if LSON = 1, transition is to subactive mode. When the transition is to active mode, after the time set in SYSCR1 bits STS2 to STS0 has elapsed, a stable clock signal is supplied to the entire chip, watch mode is cleared, and interrupt exception handling starts. Watch mode is not cleared if the I bit of CCR is set to 1 or the particular interrupt is disabled in the interrupt enable register.

- Clearing by $\overline{\text{RES}}$ input

  Clearing by $\overline{\text{RES}}$ pin is the same as for standby mode; see 2. Clearing by $\overline{\text{RES}}$ pin in section 5.3.2, Clearing Standby Mode.

5.4.3 Oscillator StabilizationTime after Watch Mode Is Cleared

The wait time is the same as for standby mode; see section 5.3.3, Oscillator Stabilization Time after Standby Mode is Cleared.

5.4.4 Notes on External Input Signal Changes before/after Watch Mode

See section 5.3.5, Notes on External Input Signal Changes before/after Standby Mode.

5.5 Subsleep Mode

5.5.1 Transition to Subsleep Mode

The system goes from subactive mode to subsleep mode when a SLEEP instruction is executed while the SSBY bit in SYSCR1 is cleared to 0, LSON bit in SYSCR1 is set to 1, and TMA3 bit in TMA is set to 1. In subsleep mode, operation of on-chip peripheral modules other than the A/D converter and PWM is in active state. As long as a minimum required voltage is applied, the contents of CPU registers, the on-chip RAM and some registers of the on-chip peripheral modules are retained. I/O ports keep the same states as before the transition.

5.5.2 Clearing Subsleep Mode

Subsleep mode is cleared by an interrupt (timer A, timer C, timer F, timer G, asynchronous event counter, SCI3, IRQAEC, IRQ_4, IRQ_3, IRQ_1, IRQ_0, WKP_7 to WKP_0) or by a low input at the $\overline{RES}$ pin.

- Clearing by interrupt

  When an interrupt is requested, subsleep mode is cleared and interrupt exception handling starts. Subsleep mode is not cleared if the I bit of CCR is set to 1 or the particular interrupt is disabled in the interrupt enable register.

  To synchronize the interrupt request signal with the system clock, up to $2/\phi_{SUB}$(s) delay may occur after the interrupt request signal occurrence, before the interrupt exception handling start.

- Clearing by $\overline{RES}$ input

  Clearing by $\overline{RES}$ pin is the same as for standby mode; see Clearing by $\overline{RES}$ pin in section 5.3.2, Clearing Standby Mode.

5.6 Subactive Mode

5.6.1 Transition to Subactive Mode

Subactive mode is entered from watch mode if a timer A, timer F, timer G, IRQ_0, or WKP_7 to WKP_0 interrupt is requested while the LSON bit in SYSCR1 is set to 1. From subsleep mode, subactive mode is entered if a timer A, timer C, timer F, timer G, asynchronous event counter, SCI3, IRQAEC, IRQ_4, IRQ_3, IRQ_1, IRQ_0, or WKP_7 to WKP_0 interrupt is requested. A transition to subactive mode does not take place if the I bit of CCR is set to 1 or the particular interrupt is disabled in the interrupt enable register.

5.6.2 Clearing Subactive Mode

Subactive mode is cleared by a SLEEP instruction or by a low input at the $\overline{RES}$ pin.

- Clearing by SLEEP instruction

  If a SLEEP instruction is executed while the SSBY bit in SYSCR1 is set to 1 and TMA3 bit in TMA is set to 1, subactive mode is cleared and watch mode is entered. If a SLEEP instruction is executed while SSBY = 0 and LSON = 1 in SYSCR1 and TMA3 = 1 in TMA, subsleep mode is entered. Direct transfer to active mode is also possible; see section 5.8, Direct Transfer, below.

- Clearing by $\overline{RES}$ pin

  Clearing by $\overline{RES}$ pin is the same as for standby mode; see Clearing by $\overline{RES}$ pin in section 5.3.2, Clearing Standby Mode.

5.6.3 Operating Frequency in Subactive Mode

The operating frequency in subactive mode is set in bits SA1 and SA0 in SYSCR2. The choices are $\phi_W/2$, $\phi_W/4$, and $\phi_W/8$.

5.7 Active (Medium-Speed) Mode

5.7.1 Transition to Active (Medium-Speed) Mode

If the MSON bit in SYSCR2 is set to 1 while the LSON bit in SYSCR1 is cleared to 0, a transition to active (medium-speed) mode results from IRQ_0, IRQ_1 or WKP_7 to WKP_0 interrupts in standby mode, timer A, timer F, timer G, IRQ_0, or WKP_7 to WKP_0 interrupts in watch mode, or any interrupt in sleep mode. A transition to active (medium-speed) mode does not take place if the I bit of CCR is set to 1 or the particular interrupt is disabled in the interrupt enable register. Furthermore, it sometimes acts with half state early timing at the time of transition to active (medium-speed) mode.

5.7.2 Clearing Active (Medium-Speed) Mode

Active (medium-speed) mode is cleared by a SLEEP instruction.

- Clearing by SLEEP instruction

  A transition to standby mode takes place if the SLEEP instruction is executed while the SSBY bit in SYSCR1 is set to 1, the LSON bit in SYSCR1 is cleared to 0, and the TMA3 bit in TMA is cleared to 0. The system goes to watch mode if the SSBY bit in SYSCR1 is set to 1 and bit TMA3 in TMA is set to 1 when a SLEEP instruction is executed.

  When both SSBY and LSON are cleared to 0 in SYSCR1 and a SLEEP instruction is executed, sleep mode is entered. Direct transfer to active (high-speed) mode or to subactive mode is also possible. See section 5.8, Direct Transfer, below for details.

- Clearing by $\overline{RES}$ pin

  When the $\overline{RES}$ pin is driven low, a transition is made to the reset state and active (medium-speed) mode is cleared.

5.7.3 Operating Frequency in Active (Medium-Speed) Mode

Operation in active (medium-speed) mode is clocked at the frequency designated by the MA1 and MA0 bits in SYSCR1.

5.8 Direct Transfer

5.8.1 Overview of Direct Transfer

The CPU can execute programs in three modes: active (high-speed) mode, active (medium-speed) mode, and subactive mode. A direct transfer is a transition among these three modes without the stopping of program execution. A direct transfer can be made by executing a SLEEP instruction while the DTON bit in SYSCR2 is set to 1. After the mode transition, direct transfer interrupt exception handling starts.

If the direct transfer interrupt is disabled in interrupt enable register 2 (IENR2), a transition is made instead to sleep mode or watch mode. Note that if a direct transition is attempted while the I bit in CCR is set to 1, sleep mode or watch mode will be entered, and it will be impossible to clear the resulting mode by means of an interrupt.

- Direct transfer from active (high-speed) mode to active (medium-speed) mode

  When a SLEEP instruction is executed in active (high-speed) mode while the SSBY and LSON bits in SYSCR1 are cleared to 0, the MSON bit in SYSCR2 is set to 1, and the DTON bit in SYSCR2 is set to 1, a transition is made to active (medium-speed) mode via sleep mode.

- Direct transfer from active (medium-speed) mode to active (high-speed) mode

  When a SLEEP instruction is executed in active (medium-speed) mode while the SSBY and LSON bits in SYSCR1 are cleared to 0, the MSON bit in SYSCR2 is cleared to 0, and the DTON bit in SYSCR2 is set to 1, a transition is made to active (high-speed) mode via sleep mode.

- Direct transfer from active (high-speed) mode to subactive mode

  When a SLEEP instruction is executed in active (high-speed) mode while the SSBY and LSON bits in SYSCR1 are set to 1, the DTON bit in SYSCR2 is set to 1, and the TMA3 bit in TMA is set to 1, a transition is made to subactive mode via watch mode.

- Direct transfer from subactive mode to active (high-speed) mode

  When a SLEEP instruction is executed in subactive mode while the SSBY bit in SYSCR1 is set to 1, the LSON bit in SYSCR1 is cleared to 0, the MSON bit in SYSCR2 is cleared to 0, the DTON bit in SYSCR2 is set to 1, and the TMA3 bit in TMA is set to 1, a transition is made directly to active (high-speed) mode via watch mode after the waiting time set in SYSCR1 bits STS2 to STS0 has elapsed.

- Direct transfer from active (medium-speed) mode to subactive mode

  When a SLEEP instruction is executed in active (medium-speed) mode while the SSBY and LSON bits in SYSCR1 are set to 1, the DTON bit in SYSCR2 is set to 1, and the TMA3 bit in TMA is set to 1, a transition is made to subactive mode via watch mode.

- Direct transfer from subactive mode to active (medium-speed) mode

  When a SLEEP instruction is executed in subactive mode while the SSBY bit in SYSCR1 is set to 1, the LSON bit in SYSCR1 is cleared to 0, the MSON bit in SYSCR2 is set to 1, the DTON bit in SYSCR2 is set to 1, and the TMA3 bit in TMA is set to 1, a transition is made directly to active (medium-speed) mode via watch mode after the waiting time set in SYSCR1 bits STS2 to STS0 has elapsed.

5.8.2 Direct Transition Times

1. Time for direct transition from active (high-speed) mode to active (medium-speed) mode

A direct transition from active (high-speed) mode to active (medium-speed) mode is performed by executing a SLEEP instruction in active (high-speed) mode while bits SSBY and LSON are both cleared to 0 in SYSCR1, and bits MSON and DTON are both set to 1 in SYSCR2. The time from execution of the SLEEP instruction to the end of interrupt exception handling (the direct transition time) is given by equation (1) below.

Direct transition time = { (Number of SLEEP instruction execution states) + (number of internal processing states) } × (tcyc before transition) + (number of interrupt exception handling execution states) × (tcyc after transition) ..... (1)

Example: Direct transition time = (2 + 1) × 2tosc + 14 × 16tosc = 230tosc (when ϕ/8 is selected as the CPU operating clock)

[Legend]
tosc: OSC clock cycle time
tcyc: System clock (ϕ) cycle time

2. Time for direct transition from active (medium-speed) mode to active (high-speed) mode

A direct transition from active (medium-speed) mode to active (high-speed) mode is performed by executing a SLEEP instruction in active (medium-speed) mode while bits SSBY and LSON are both cleared to 0 in SYSCR1, and bit MSON is cleared to 0 and bit DTON is set to 1 in SYSCR2. The time from execution of the SLEEP instruction to the end of interrupt exception handling (the direct transition time) is given by equation (2) below.

Direct transition time = { (Number of SLEEP instruction execution states) + (number of internal processing states) } × (tcyc before transition) + (number of interrupt exception handling execution states) × (tcyc after transition) ..... (2)

Example: Direct transition time = (2 + 1) × 16tosc + 14 × 2tosc = 76tosc (when ϕ/8 is selected as the CPU operating clock)

[Legend]
tosc: OSC clock cycle time
tcyc: System clock (ϕ) cycle time

3. Time for direct transition from subactive mode to active (high-speed) mode

A direct transition from subactive mode to active (high-speed) mode is performed by executing a SLEEP instruction in subactive mode while bit SSBY is set to 1 and bit LSON is cleared to 0 in SYSCR1, bit MSON is cleared to 0 and bit DTON is set to 1 in SYSCR2, and bit TMA3 is set to 1 in TMA. The time from execution of the SLEEP instruction to the end of interrupt exception handling (the direct transition time) is given by equation (3) below.

Direct transition time = { (Number of SLEEP instruction execution states) + (number of internal processing states) } × (tsubcyc before transition) + { (wait time set in STS2 to STS0) + (number of interrupt exception handling execution states) } × (tcyc after transition) ..... (3)

Example: Direct transition time = (2 + 1) × 8tw + (8192 + 14) × 2tosc = 24tw + 16412tosc (when ϕw/8 is selected as the CPU operating clock, and wait time = 8192 states)

[Legend]
tosc: OSC clock cycle time
tw: Watch clock cycle time
tcyc: System clock (ϕ) cycle time
tsubcyc: Subclock (ϕ_{SUB}) cycle time

4. Time for direct transition from subactive mode to active (medium-speed) mode

A direct transition from subactive mode to active (medium-speed) mode is performed by executing a SLEEP instruction in subactive mode while bit SSBY is set to 1 and bit LSON is cleared to 0 in SYSCR1, bits MSON and DTON are both set to 1 in SYSCR2, and bit TMA3 is set to 1 in TMA. The time from execution of the SLEEP instruction to the end of interrupt exception handling (the direct transition time) is given by equation (4) below.

Direct transition time = { (Number of SLEEP instruction execution states) + (number of internal processing states) } × (tsubcyc before transition) + { (wait time set in STS2 to STS0) + (number of interrupt exception handling execution states) } × (tcyc after transition) ..... (4)

Example: Direct transition time = (2 + 1) × 8tw + (8192 + 14) × 16tosc = 24tw + 131296tosc
(when ϕw/8 or ϕ/8 is selected as the CPU operating clock, and wait time = 8192 states)

[Legend]
tosc: OSC clock cycle time
tw: Watch clock cycle time
tcyc: System clock (ϕ) cycle time
tsubcyc: Subclock (ϕ_{SUB}) cycle time

5.8.3 Notes on External Input Signal Changes before/after Direct Transition

1. Direct transition from active (high-speed) mode to subactive mode
   Since the mode transition is performed via watch mode, see section 5.3.5, Notes on External Input Signal Changes before/after Standby Mode.

2. Direct transition from active (medium-speed) mode to subactive mode
   Since the mode transition is performed via watch mode, see section 5.3.5, Notes on External Input Signal Changes before/after Standby Mode.

3. Direct transition from subactive mode to active (high-speed) mode
   Since the mode transition is performed via watch mode, see section 5.3.5, Notes on External Input Signal Changes before/after Standby Mode.

4. Direct transition from subactive mode to active (medium-speed) mode
   Since the mode transition is performed via watch mode, see section 5.3.5, Notes on External Input Signal Changes before/after Standby Mode.

5.9 Module Standby Mode

5.9.1 Setting Module Standby Mode

Module standby mode is set for individual peripheral functions. All the on-chip peripheral modules can be placed in module standby mode. When a module enters module standby mode, the system clock supply to the module is stopped and operation of the module halts. This state is identical to standby mode.

Module standby mode is set for a particular module by setting the corresponding bit to 0 in clock stop register 1 (CKSTPR1) or clock stop register 2 (CKSTPR2). (See table 5.5.)

5.9.2 Clearing Module Standby Mode

Module standby mode is cleared for a particular module by setting the corresponding bit to 1 in clock stop register 1 (CKSTPR1) or clock stop register 2 (CKSTPR2). (See table 5.5.)

Following a reset, clock stop register 1 (CKSTPR1) and clock stop register 2 (CKSTPR2) are both initialized to H'FF.

Table 5.5 Setting and Clearing Module Standby Mode by Clock Stop Register

Register Name	Bit Name		Operation
CKSTPR1	TACKSTP	1	Timer A module standby mode is cleared
		0	Timer A is set to module standby mode
	TCCKSTP	1	Timer C module standby mode is cleared
		0	Timer C is set to module standby mode
	TFCKSTP	1	Timer F module standby mode is cleared
		0	Timer F is set to module standby mode
	TGCKSTP	1	Timer G module standby mode is cleared
		0	Timer G is set to module standby mode
	ADCKSTP	1	A/D converter module standby mode is cleared
		0	A/D converter is set to module standby mode
	S32CKSTP	1	SCI3 module standby mode is cleared
		0	SCI3 is set to module standby mode

Register Name	Bit Name		Operation
CKSTPR2	LDCKSTP	1	LCD module standby mode is cleared
		0	LCD is set to module standby mode
	PW1CKSTP	1	PWM1 module standby mode is cleared
		0	PWM1 is set to module standby mode
	WDCKSTP	1	Watchdog timer module standby mode is cleared
		0	Watchdog timer is set to module standby mode
	AECKSTP	1	Asynchronous event counter module standby mode is cleared
		0	Asynchronous event counter is set to module standby mode
	PW2CKSTP	1	PWM2 module standby mode is cleared
		0	PWM2 is set to module standby mode
	LVDCKSTP*	1	LVD module standby mode is cleared
		0	LVD is set to module standby mode

Notes: For details of module operation, see the sections on the individual modules.
* LVDCKSTP is implemented on the H8/38124 group only.

5.10 Usage Note

5.10.1 Contention Between Module Standby and Interrupts

If, due to timing with which a peripheral module issues interrupt requests, the module in question is set to module standby mode before an interrupt is processed, the module will stop with the interrupt request still pending. In this situation, interrupt processing will be repeated indefinitely unless interrupts are prohibited.

It is therefore necessary to ensure that no interrupts are generated when a module is set to module standby mode. The surest way to do this is to specify the module standby mode setting only when interrupts are prohibited (interrupts prohibited using the interrupt enable register or interrupts masked using bit CCR-1).

Section 6 ROM

6.1 Overview

The H8/38024, H8/38024S, and H8/38124 have 32 Kbytes of on-chip mask ROM, the H8/38023, H8/38023S, and H8/38123 have 24 Kbytes, the H8/38022, H8/38022S, and H8/38122 have 16 Kbytes, the H8/38021, H8/38021S, and H8/38121 have 12 Kbytes, and the H8/38020, H8/38020S, and H8/38120 have 8 Kbytes. The ROM is connected to the CPU by a 16-bit data bus, allowing high-speed two-state access for both byte data and word data. The H8/38024 has a ZTAT version and F-ZTAT version with 32-Kbyte PROM and flash memory. F-ZTAT™ versions of the H8/38124 and H8/38122 are available. The former has 32 Kbytes, and the latter 16 Kbytes, of flash memory.

6.1.1 Block Diagram

Figure 6.1 shows a block diagram of the on-chip ROM.

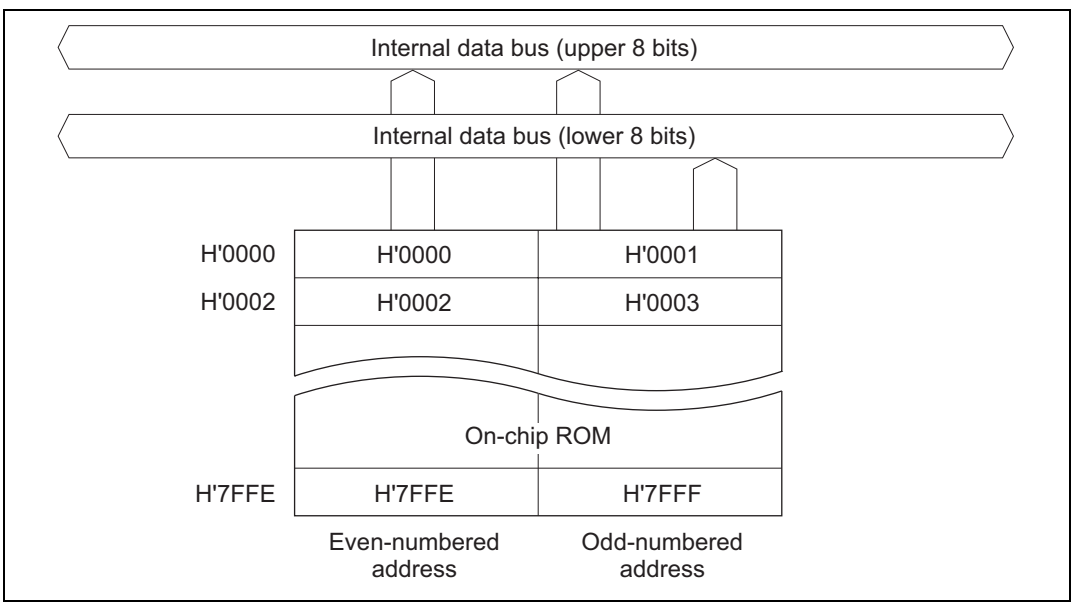

Figure 6.1 ROM Block Diagram (H8/38024)

6.2 H8/38024 PROM Mode

6.2.1 Setting to PROM Mode

If the on-chip ROM is PROM, setting the chip to PROM mode stops operation as a microcontroller and allows the PROM to be programmed in the same way as the standard HN27C101 EPROM. However, page programming is not supported. Table 6.1 shows how to set the chip to PROM mode.

Table 6.1 Setting to PROM Mode

Pin Name	Setting
TEST	High level
PB_0/AN_0	Low level
PB_1/AN_1	
PB_2/AN_2	High level

6.2.2 Socket Adapter Pin Arrangement and Memory Map

A standard PROM programmer can be used to program the PROM. A socket adapter is required for conversion to 32 pins.

Figure 6.2 shows the pin-to-pin wiring of the socket adapter. Figure 6.3 shows a memory map.

H8/38024

FP-80A, TFP-80C	FP-80B	Pin
12	14	$\overline{RES}$
21	23	$P6_0$
22	24	$P6_1$
23	25	$P6_2$
24	26	$P6_3$
25	27	$P6_4$
26	28	$P6_5$
27	29	$P6_6$
28	30	$P6_7$
69	71	$P4_0$
70	72	$P4_1$
63	65	$P3_2$
64	66	$P3_3$
65	67	$P3_4$
66	68	$P3_5$
67	69	$P3_6$
68	70	$P3_7$
29	31	$P7_0$
72	74	$P4_3$
31	33	$P7_2$
32	34	$P7_3$
33	35	$P7_4$
34	36	$P7_5$
35	37	$P7_6$
57	59	$P9_3$
58	60	$P9_4$
36	38	$P7_7$
30	32	$P7_1$
56	58	$P9_2$
52	54	V_{CC}
1	3	AV_{CC}
11	13	TEST
75	77	PB_2
54	56	$P9_0$
55	57	$P9_1$
59	61	$P9_5$
53	55	V_{SS}
8	10	V_{SS} = AV_{SS}
6	8	X_1
73	75	PB_0
74	76	PB_1

EPROM socket

Pin	HN27C101 (32-pin)
V_{PP}	1
EO_0	13
EO_1	14
EO_2	15
EO_3	17
EO_4	18
EO_5	19
EO_6	20
EO_7	21
EA_0	12
EA_1	11
EA_2	10
EA_3	9
EA_4	8
EA_5	7
EA_6	6
EA_7	5
EA_8	27
EA_9	26
EA_{10}	23
EA_{11}	25
EA_{12}	4
EA_{13}	28
EA_{14}	29
EA_{15}	3
EA_{16}	2
$\overline{CE}$	22
$\overline{OE}$	24
$\overline{PGM}$	31
V_{CC}	32
V_{SS}	16

Note: Pins not indicated in the figure should be left open.

Figure 6.2 Socket Adapter Pin Correspondence (with HN27C101)

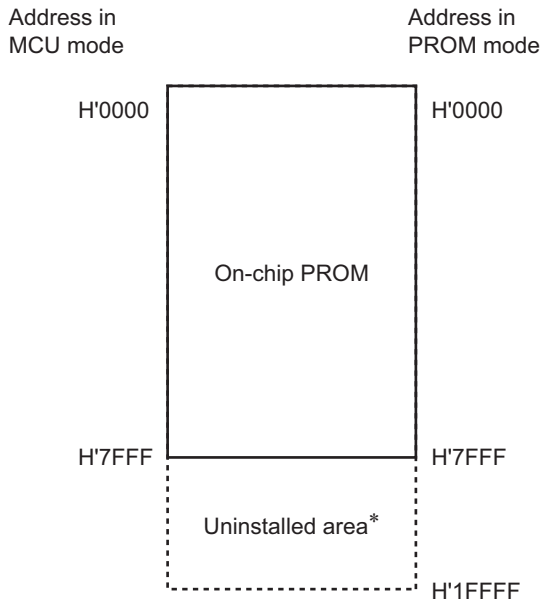

Note: * The output data is not guaranteed if this address area is read in PROM mode. Therefore, when programming with a PROM programmer, be sure to specify addresses from H'0000 to H'7FFF. If programming is inadvertently performed from H'8000 onward, it may not be possible to continue PROM programming and verification.
When programming, H'FF should be set as the data in this address area (H'8000 to H'1FFFF).

Figure 6.3 H8/38024 Memory Map in PROM Mode

6.3 H8/38024 Programming

The write, verify, and other modes are selected as shown in table 6.2 in H8/38024 PROM mode.

Table 6.2 Mode Selection in PROM Mode (H8/38024)

	Pins						
Mode	**$\overline{CE}$**	**$\overline{OE}$**	**$\overline{PGM}$**	**V_{PP}**	**V_{CC}**	**EO_7 to EO_0**	**EA_{16} to EA_0**
Write	L	H	L	V_{PP}	V_{CC}	Data input	Address input
Verify	L	L	H	V_{PP}	V_{CC}	Data output	Address input
Programming disabled	L	L	L	V_{PP}	V_{CC}	High impedance	Address input
	L	H	H				
	H	L	L				
	H	H	H				

[Legend]
L: Low level
H: High level
V_{PP}: V_{PP} level
V_{CC}: V_{CC} level

The specifications for writing and reading are identical to those for the standard HN27C101 EPROM. However, page programming is not supported, and so page programming mode must not be set. A PROM programmer that only supports page programming mode cannot be used. When selecting a PROM programmer, ensure that it supports high-speed, high-reliability byte-by-byte programming. Also, be sure to specify addresses from H'0000 to H'7FFF.

6.3.1 Writing and Verifying

An efficient, high-speed, high-reliability method is available for writing and verifying the PROM data. This method achieves high speed without voltage stress on the device and without lowering the reliability of written data. The basic flow of this high-speed, high-reliability programming method is shown in figure 6.4.

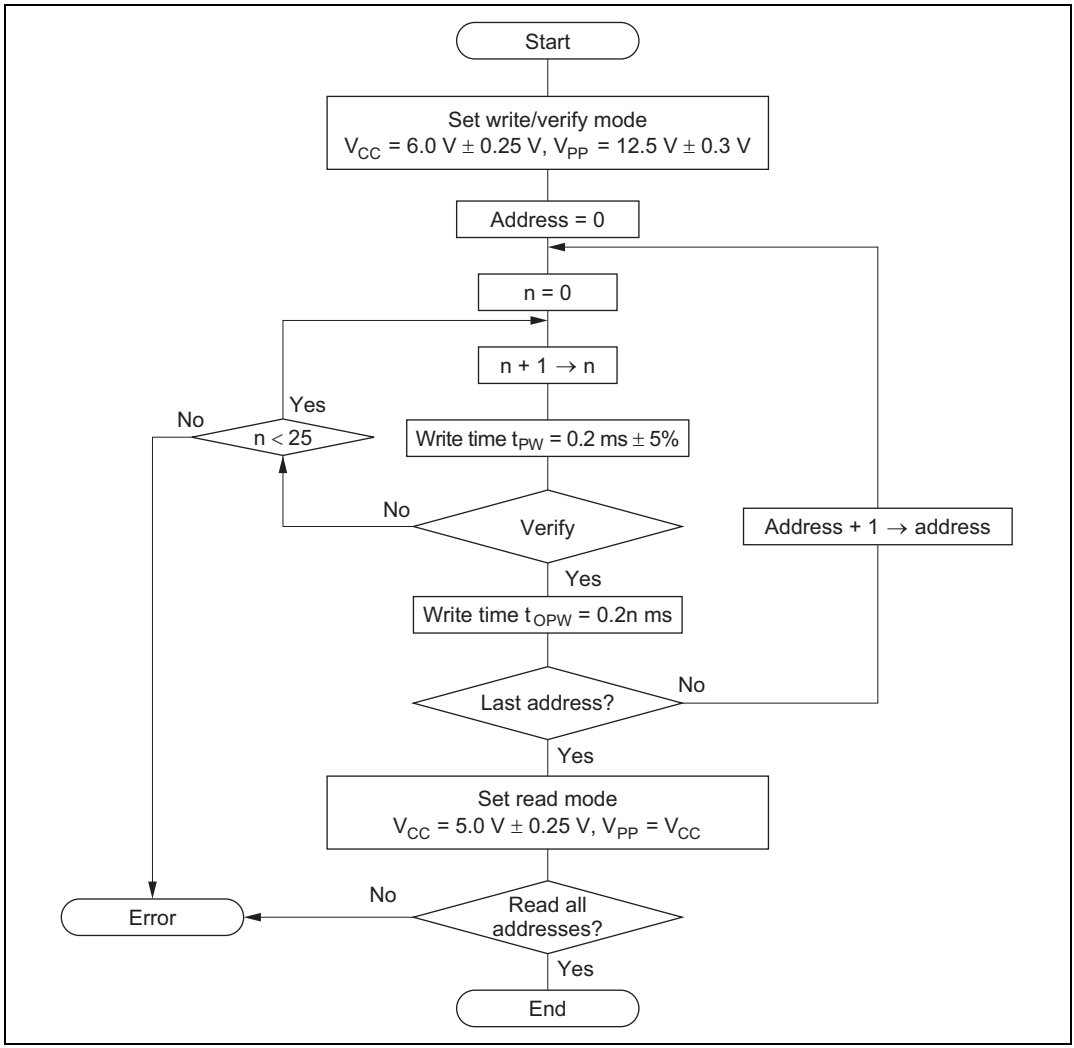

Figure 6.4 High-Speed, High-Reliability Programming Flowchart

Tables 6.3 and 6.4 give the electrical characteristics in programming mode.

Table 6.3 DC Characteristics

Conditions: V_{CC} = 6.0 V ±0.25 V, V_{PP} = 12.5 V ±0.3 V, V_{SS} = 0 V, T_a = 25°C ±5°C

Item		Symbol	Min	Typ	Max	Unit	Test Condition
Input high-level voltage	EO_7 to EO_0, EA_{16} to EA_0, $\overline{OE}$, $\overline{CE}$, $\overline{PGM}$	V_{IH}	2.4	—	V_{CC} + 0.3	V	
Input low-level voltage	EO_7 to EO_0, EA_{16} to EA_0, $\overline{OE}$, $\overline{CE}$, $\overline{PGM}$	V_{IL}	–0.3	—	0.8	V	
Output high-level voltage	EO_7 to EO_0	V_{OH}	2.4	—	—	V	I_{OH} = –200 µA
Output low-level voltage	EO_7 to EO_0	V_{OL}	—	—	0.45	V	I_{OL} = 0.8 mA
Input leakage current	EO_7 to EO_0, EA_{16} to EA_0, $\overline{OE}$, $\overline{CE}$, $\overline{PGM}$	$\|I_{LI}\|$	—	—	2	µA	V_{in} = 5.25 V/ 0.5 V
V_{CC} current		I_{CC}	—	—	40	mA	
V_{PP} current		I_{PP}	—	—	40	mA	

Table 6.4 AC Characteristics

Conditions: V_{CC} = 6.0 V ±0.25 V, V_{PP} = 12.5 V ±0.3 V, T_a = 25°C ±5°C

Item	Symbol	Min	Typ	Max	Unit	Test Condition
Address setup time	t_{AS}	2	—	—	µs	Figure 6.5*1
$\overline{OE}$ setup time	t_{OES}	2	—	—	µs	
Data setup time	t_{DS}	2	—	—	µs	
Address hold time	t_{AH}	0	—	—	µs	
Data hold time	t_{DH}	2	—	—	µs	
Data output disable time	t_{DF}*2	—	—	130	ns	
V_{PP} setup time	t_{VPS}	2	—	—	µs	
Programming pulse width	t_{PW}	0.19	0.20	0.21	ms	
$\overline{PGM}$ pulse width for overwrite programming	t_{OPW}*3	0.19	—	5.25	ms	
$\overline{CE}$ setup time	t_{CES}	2	—	—	µs	
V_{CC} setup time	t_{VCS}	2	—	—	µs	
Data output delay time	t_{OE}	0	—	200	ns	

Notes: 1. Input pulse level: 0.45 V to 2.4 V
Input rise time/fall time ≤ 20 ns
Timing reference levels Input: 0.8 V, 2.0 V
Output: 0.8 V, 2.0 V

2. t_{DF} is defined at the point at which the output is floating and the output level cannot be read.
3. t_{OPW} is defined by the value given in figure 6.4, High-Speed, High-Reliability Programming Flow Chart.

Figure 6.5 shows a PROM write/verify timing diagram.

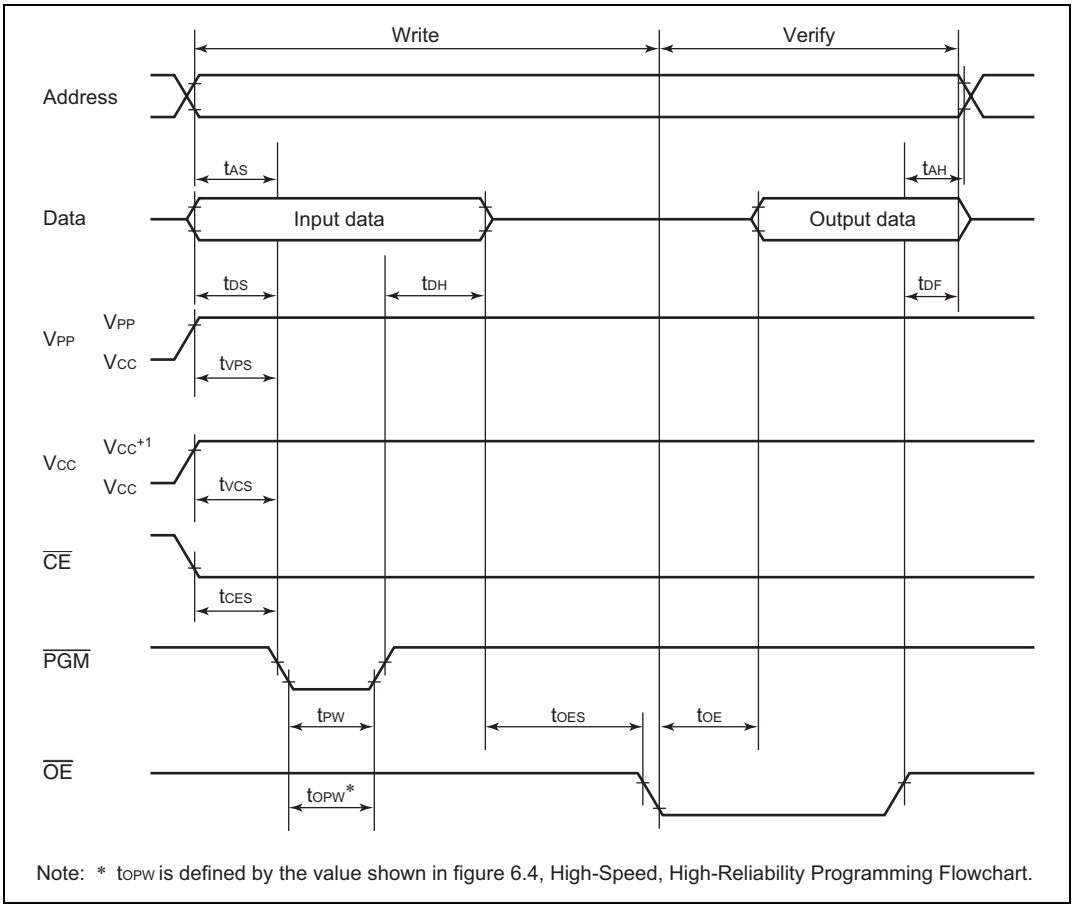

Figure 6.5 PROM Write/Verify Timing

6.3.2 Programming Precautions

- Use the specified programming voltage and timing.

  The programming voltage in PROM mode (V_{PP}) is 12.5 V. Use of a higher voltage can permanently damage the chip. Be especially careful with respect to PROM programmer overshoot.

  Setting the PROM programmer to Renesas specifications for the HN27C101 will result in correct V_{PP} of 12.5 V.
- Make sure the index marks on the PROM programmer socket, socket adapter, and chip are properly aligned. If they are not, the chip may be destroyed by excessive current flow. Before programming, be sure that the chip is properly mounted in the PROM programmer.
- Avoid touching the socket adapter or chip while programming, since this may cause contact faults and write errors.
- Take care when setting the programming mode, as page programming is not supported.
- When programming with a PROM programmer, be sure to specify addresses from H'0000 to H'7FFF. If programming is inadvertently performed from H'8000 onward, it may not be possible to continue PROM programming and verification. When programming, H'FF should be set as the data in address area H'8000 to H'1FFFF.

6.4 Reliability of Programmed Data

A highly effective way to improve data retention characteristics is to bake the programmed chips at 150°C, then screen them for data errors. This procedure quickly eliminates chips with PROM memory cells prone to early failure.

Figure 6.6 shows the recommended screening procedure.

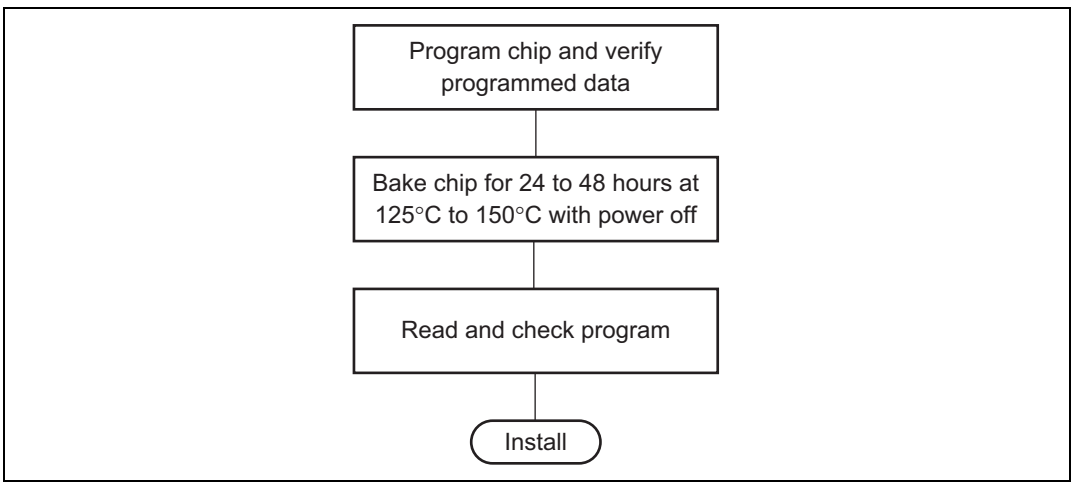

Figure 6.6 Recommended Screening Procedure

If a series of programming errors occurs while the same PROM programmer is in use, stop programming and check the PROM programmer and socket adapter for defects. Please inform Renesas Technology of any abnormal conditions noted during or after programming or in screening of program data after high-temperature baking.

6.5 Flash Memory Overview

6.5.1 Features

The features of the 32-Kbyte or 16-Kbyte flash memory built into the flash memory versions are summarized below.

- Programming/erase methods
  - The flash memory is programmed 128 bytes at a time. Erase is performed in single-block units. On the HD64F38024, HD64F38024R, and HD64F38124 the flash memory is configured as follows: 1 Kbyte × 4 blocks, 28 Kbytes × 1 block. On the HD64F38122 the flash memory is configured as follows: 1 Kbyte × 4 blocks, 12 Kbytes × 1 block. To erase the entire flash memory, each block must be erased in turn.
- Reprogramming capability
  - The HD64F38024R, HD64F38124, and HD64F38122 can be reprogrammed up to 1,000 times and the HD64F38024 up to 100 times.
- On-board programming
  - On-board programming/erasing can be done in boot mode, in which the boot program built into the chip is started to erase or program of the entire flash memory. In normal user program mode, individual blocks can be erased or programmed.
- Programmer mode
  - Flash memory can be programmed/erased in programmer mode using a PROM programmer, as well as in on-board programming mode.
- Automatic bit rate adjustment
  - For data transfer in boot mode, this LSI's bit rate can be automatically adjusted to match the transfer bit rate of the host.
- Programming/erasing protection
  - Sets software protection against flash memory programming/erasing.
- Power-down mode
  - The power supply circuit is partly halted in the subactive mode and can be read in the power-down mode.

Note: The system clock oscillator must be used when programming or erasing the flash memory of the HD64F38124 and HD64F38122.

6.5.2 Block Diagram

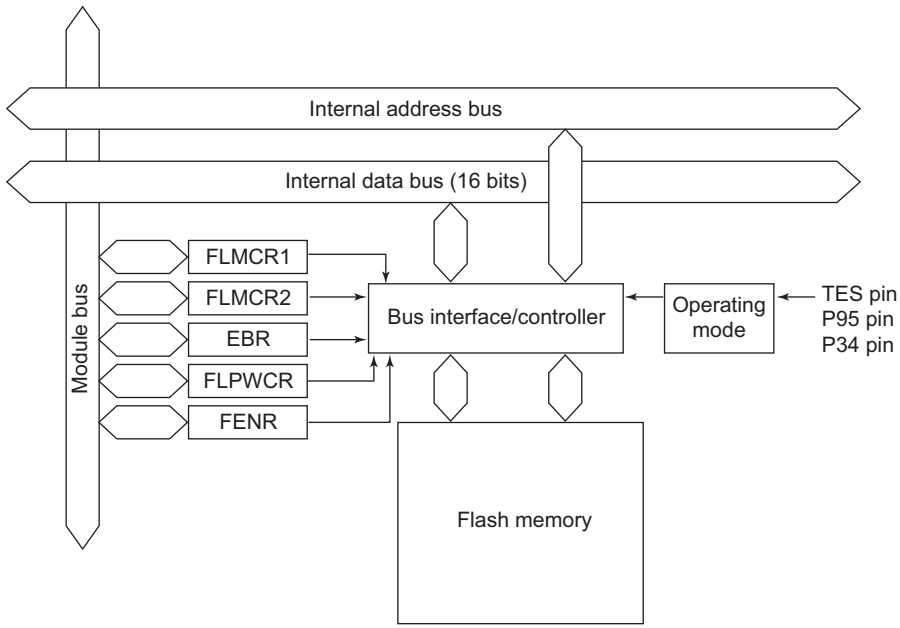

[Legend]
FLMCR1: Flash memory control register 1
FLMCR2: Flash memory control register 2
EBR: Erase block register
FLPWCR: Flash memory power control register
FENR: Flash memory enable register

Figure 6.7 Block Diagram of Flash Memory

6.5.3 Block Configuration

Figure 6.8 shows the block configuration of the flash memory. The thick lines indicate erasing units, the narrow lines indicate programming units, and the values are addresses. In versions with 32 Kbytes of flash memory, the flash memory is divided into 1 Kbyte × 4 blocks and 28 Kbytes × 1 block. In versions with 16 Kbytes of flash memory, the flash memory is divided into 1 Kbyte × 4 blocks and 12 Kbytes × 1 block. Erasing is performed in these units. Programming is performed in 128-byte units starting from an address with lower eight bits H'00 or H'80.

	H'0000	H'0001	H'0002	← Programming unit: 128 bytes →	H'007F
Erase unit	H'0080	H'0081	H'0082		H'00FF
1 Kbyte					
	H'0380	H'0381	H'0382		H'03FF
	H'0400	H'0401	H'0402	← Programming unit: 128 bytes →	H'047F
Erase unit	H'0480	H'0481	H'0482		H'04FF
1 Kbyte					
	H'0780	H'0781	H'0782		H'07FF
	H'0800	H'0801	H'0802	← Programming unit: 128 bytes →	H'087F
Erase unit	H'0880	H'0881	H'0882		H'08FF
1 Kbyte					
	H'0B80	H'0B81	H'0B82		H'0BFF
	H'0C00	H'0C01	H'0C02	← Programming unit: 128 bytes →	H'0C7F
Erase unit	H'0C80	H'0C81	H'0C82		H'0CFF
1 Kbyte					
	H'0F80	H'0F81	H'0F82		H'0FFF
	H'1000	H'1001	H'1002	← Programming unit: 128 bytes →	H'107F
Erase unit	H'1080	H'1081	H'1082		H'10FF
28 Kbytes					
	H'7F80	H'7F81	H'7F82		H'7FFF

Figure 6.8(1) Block Configuration of 32-Kbyte Flash Memory

	H'0000	H'0001	H'0002	← Programming unit: 128 bytes →	H'007F
Erase unit	H'0080	H'0081	H'0082		H'00FF
1 Kbyte					
	H'0380	H'0381	H'0382		H'03FF
	H'0400	H'0401	H'0402	← Programming unit: 128 bytes →	H'047F
Erase unit	H'0480	H'0481	H'0482		H'04FF
1 Kbyte					
	H'0780	H'0781	H'0782		H'07FF
	H'0800	H'0801	H'0802	← Programming unit: 128 bytes →	H'087F
Erase unit	H'0880	H'0881	H'0882		H'08FF
1 Kbyte					
	H'0B80	H'0B81	H'0B82		H'0BFF
	H'0C00	H'0C01	H'0C02	← Programming unit: 128 bytes →	H'0C7F
Erase unit	H'0C80	H'0C81	H'0C82		H'0CFF
1 Kbyte					
	H'0F80	H'0F81	H'0F82		H'0FFF
	H'1000	H'1001	H'1002	← Programming unit: 128 bytes →	H'107F
Erase unit	H'1080	H'1081	H'1082		H'10FF
12 Kbytes					
	H'3F80	H'3F81	H'3F82		H'3FFF

Figure 6.8(2) Block Configuration of 16-Kbyte Flash Memory

6.5.4 Register Configuration

Table 6.5 lists the register configuration to control the flash memory when the built in flash memory is effective.

Table 6.5 Register Configuration

Register Name	Abbreviation	R/W	Initial Value	Address
Flash memory control register 1	FLMCR1	R/W	H'00	H'F020
Flash memory control register 2	FLMCR2	R	H'00	H'F021
Flash memory power control register	FLPWCR	R/W	H'00	H'F022
Erase block register	EBR	R/W	H'00	H'F023
Flash memory enable register	FENR	R/W	H'00	H'F02B

Note: FLMCR1, FLMCR2, FLPWCR, EBR, and FENR are 8 bit registers. Only byte access is enabled which are two-state access. These registers are dedicated to the product in which flash memory is included. The product in which PROM or ROM is included does not have these registers. When the corresponding address is read in these products, the value is undefined. A write is disabled.

6.6 Descriptions of Registers of the Flash Memory

6.6.1 Flash Memory Control Register 1 (FLMCR1)

Bit	7	6	5	4	3	2	1	0
	—	SWE	ESU	PSU	EV	PV	E	P
Initial value	0	0	0	0	0	0	0	0
Read/Write	—	R/W	R/W	R/W	R/W	R/W	R/W	R/W

FLMCR1 is a register that makes the flash memory change to program mode, program-verify mode, erase mode, or erase-verify mode. For details on register setting, refer to section 6.8, Flash Memory Programming/Erasing. By setting this register, the flash memory enters program mode, erase mode, program-verify mode, or erase-verify mode. Read the data in the state that bits 6 to 0 of this register are cleared when using flash memory as normal built-in ROM.

Bit 7—Reserved

This bit is always read as 0 and cannot be modified.

Bit 6—Software Write Enable (SWE)

This bit is to set enabling/disabling of programming/enabling of flash memory (set when bits 5 to 0 and the EBR register are to be set).

Bit 6 SWE	Description
0	Programming/erasing is disabled. Other FLMCR1 register bits and all EBR bits cannot be set. (initial value)
1	Flash memory programming/erasing is enabled.

Bit 5—Erase Setup (ESU)

This bit is to prepare for changing to erase mode. Set this bit to 1 before setting the E bit to 1 in FLMCR1 (do not set SWE, PSU, EV, PV, E, and P bits at the same time).

Bit 5 ESU	Description
0	The erase setup state is cancelled (initial value)
1	The flash memory changes to the erase setup state. Set this bit to 1 before setting the E bit to 1 in FLMCR1.

Bit 4—Program Setup (PSU)

This bit is to prepare for changing to program mode. Set this bit to 1 before setting the P bit to 1 in FLMCR1 (do not set SWE, ESU, EV, PV, E, and P bits at the same time).

Bit 4 PSU	Description
0	The program setup state is cancelled (initial value)
1	The flash memory changes to the program setup state. Set this bit to 1 before setting the P bit to 1 in FLMCR1.

Bit 3—Erase-Verify (EV)

This bit is to set changing to or cancelling erase-verify mode (do not set SWE, ESU, PSU, PV, E, and P bits at the same time).

Bit 3 EV	Description	
0	Erase-verify mode is cancelled	(initial value)
1	The flash memory changes to erase-verify mode	

Bit 2—Program-Verify (PV)

This bit is to set changing to or cancelling program-verify mode (do not set SWE, ESU, PSU, EV, E, and P bits at the same time).

Bit 2 PV	Description	
0	Program-verify mode is cancelled	(initial value)
1	The flash memory changes to program-verify mode	

Bit 1—Erase (E)

This bit is to set changing to or cancelling erase mode (do not set SWE, ESU, PSU, EV, PV, and P bits at the same time).

Bit 1 E	Description	
0	Erase mode is cancelled	(initial value)
1	When this bit is set to 1, while the SWE = 1 and ESU = 1, the flash memory changes to erase mode.	

Bit 0—Program (P)

This bit is to set changing to or cancelling program mode (do not set SWE, ESU, PSU, EV, PV, and E bits at the same time).

Bit 0 P	Description	
0	Program mode is cancelled	(initial value)
1	When this bit is set to 1, while the SWE = 1 and PSU = 1, the flash memory changes to program mode.	

6.6.2 Flash Memory Control Register 2 (FLMCR2)

Bit	7	6	5	4	3	2	1	0
	FLER	—	—	—	—	—	—	—
Initial value	0	0	0	0	0	0	0	0
Read/Write	R	—	—	—	—	—	—	—

FLMCR2 is a register that displays the state of flash memory programming/erasing. FLMCR2 is a read-only register, and should not be written to.

Bit 7—Flash Memory Error (FLER)

This bit is set when the flash memory detects an error and goes to the error-protection state during programming or erasing to the flash memory. See section 6.9.3, Error Protection, for details.

Bit 7 FLER	Description
0	The flash memory operates normally. (initial value)
1	Indicates that an error has occurred during an operation on flash memory (programming or erasing).

Bits 6 to 0—Reserved

These bits are always read as 0 and cannot be modified.

6.6.3 Erase Block Register (EBR)

Bit	7	6	5	4	3	2	1	0
	—	—	—	EB4	EB3	EB2	EB1	EB0
Initial value	0	0	0	0	0	0	0	0
Read/Write	—	—	—	R/W	R/W	R/W	R/W	R/W

EBR specifies the flash memory erase area block. EBR is initialized to H'00 when the SWE bit in FLMCR1 is 0. Do not set more than one bit at a time, as this will cause all the bits in EBR to be automatically cleared to 0. When each bit is set to 1 in EBR, the corresponding block can be erased. Other blocks change to the erase-protection state. See table 6.6 for the method of dividing blocks of the flash memory. When the whole bits are to be erased, erase them in turn in unit of a block.

Table 6.6 Division of Blocks to Be Erased

EBR	Bit Name	Block (Size)	Address
0	EB0	EB0 (1 Kbyte)	H'0000 to H'03FF
1	EB1	EB1 (1 Kbyte)	H'0400 to H'07FF
2	EB2	EB2 (1 Kbyte)	H'0800 to H'0BFF
3	EB3	EB3 (1 Kbyte)	H'0C00 to H'0FFF
4	EB4	EB4 (12 Kbytes)	H'1000 to H'3FFF (HD64F38122)
		EB4 (28 Kbytes)	H'1000 to H'7FFF (HD64F38124, HD64F38024, HD64F38024R)

6.6.4 Flash Memory Power Control Register (FLPWCR)

Bit	7	6	5	4	3	2	1	0
	PDWND	—	—	—	—	—	—	—
Initial value	0	0	0	0	0	0	0	0
Read/Write	R/W	—	—	—	—	—	—	—

FLPWCR enables or disables a transition to the flash memory power-down mode when the LSI switches to subactive mode. The power supply circuit can be read in the subactive mode, although it is partly halted in the power-down mode.

Bit 7—Power-down Disable (PDWND)

This bit selects the power-down mode of the flash memory when a transition to the subactive mode is made.

Bit 7 PDWND	Description
0	When this bit is 0 and a transition is made to the subactive mode, the flash memory enters the power-down mode. (initial value)
1	When this bit is 1, the flash memory remains in the normal mode even after a transition is made to the subactive mode.

Bits 6 to 0—Reserved

These bits are always read as 0 and cannot be modified.

6.6.5 Flash Memory Enable Register (FENR)

Bit	7	6	5	4	3	2	1	0
	FLSHE	—	—	—	—	—	—	—
Initial value	0	0	0	0	0	0	0	0
Read/Write	R/W	—	—	—	—	—	—	—

FENR controls CPU access to the flash memory control registers, FLMCR1, FLMCR2, EBR, and FLPWCR.

Bit 7—Flash Memory Control Register Enable (FLSHE)

This bit controls access to the flash memory control registers.

Bit 7 FLSHE	Description
0	Flash memory control registers cannot be accessed (initial value)
1	Flash memory control registers can be accessed

Bits 6 to 0—Reserved

These bits are always read as 0 and cannot be modified.

6.7 On-Board Programming Modes

There are two modes for programming/erasing of the flash memory; boot mode, which enables on-board programming/erasing, and programmer mode, in which programming/erasing is performed with a PROM programmer. On-board programming/erasing can also be performed in user program mode. At reset-start in reset mode, the series of HD64F38024, HD64F38024R, HD64F38124, and HD64F38122 changes to a mode depending on the TEST pin settings, P95 pin settings, and input level of each port, as shown in table 6.7. The input level of each pin must be defined four states before the reset ends.

When changing to boot mode, the boot program built into this LSI is initiated. The boot program transfers the programming control program from the externally-connected host to on-chip RAM via SCI3. After erasing the entire flash memory, the programming control program is executed. This can be used for programming initial values in the on-board state or for a forcible return when programming/erasing can no longer be done in user program mode. In user program mode, individual blocks can be erased and programmed by branching to the user program/erase control program prepared by the user.

Table 6.7 Setting Programming Modes

TEST	P95	P34	PB0	PB1	PB2	LSI State after Reset End
0	1	X	X	X	X	User Mode
0	0	1	X	X	X	Boot Mode
1	X	X	0	0	0	Programmer Mode

X: Don’t care

6.7.1 Boot Mode

Table 6.8 shows the boot mode operations between reset end and branching to the programming control program.

1. When boot mode is used, the flash memory programming control program must be prepared in the host beforehand. Prepare a programming control program in accordance with the description in section 6.8, Flash Memory Programming/Erasing.
2. SCI3 should be set to asynchronous mode, and the transfer format as follows: 8-bit data, 1 stop bit, and no parity. The inversion function of TXD and RXD pins by the SPCR register is set to “Not to be inverted,” so do not put the circuit for inverting a value between the host and this LSI.

3. When the boot program is initiated, the chip measures the low-level period of asynchronous SCI communication data (H'00) transmitted continuously from the host. The chip then calculates the bit rate of transmission from the host, and adjusts the SCI3 bit rate to match that of the host. The reset should end with the RXD pin high. The RXD and TXD pins should be pulled up on the board if necessary. After the reset is complete, it takes approximately 100 states before the chip is ready to measure the low-level period.
4. After matching the bit rates, the chip transmits one H'00 byte to the host to indicate the completion of bit rate adjustment. The host should confirm that this adjustment end indication (H'00) has been received normally, and transmit one H'55 byte to the chip. If reception could not be performed normally, initiate boot mode again by a reset. Depending on the host's transfer bit rate and system clock frequency of this LSI, there will be a discrepancy between the bit rates of the host and the chip. To operate the SCI properly, set the host's transfer bit rate and system clock frequency of this LSI within the ranges listed in table 6.9.
5. In boot mode, a part of the on-chip RAM area is used by the boot program. The area H'F780 to H'FEEF is the area to which the programming control program is transferred from the host. The boot program area cannot be used until the execution state in boot mode switches to the programming control program.
6. Before branching to the programming control program, the chip terminates transfer operations by SCI3 (by clearing the RE and TE bits in SCR to 0), however the adjusted bit rate value remains set in BRR. Therefore, the programming control program can still use it for transfer of write data or verify data with the host. The TXD pin is high (PCR42 = 1, P42 = 1). The contents of the CPU general registers are undefined immediately after branching to the programming control program. These registers must be initialized at the beginning of the programming control program, as the stack pointer (SP), in particular, is used implicitly in subroutine calls, etc.
7. Boot mode can be cleared by a reset. End the reset after driving the reset pin low, waiting at least 20 states, and then setting the TEST pin and P95 pin. Boot mode is also cleared when a WDT overflow occurs.
8. Do not change the TEST pin and P95 pin input levels in boot mode.

Table 6.8 Boot Mode Operation

Item	Host Operation Processing Contents	LSI Operation Processing Contents
		Branches to boot program at reset-start.
Bit rate adjustment	Continuously transmits data H'00 at specified bit rate.	· Measures low-level period of receive data H'00. · Calculates bit rate and sets it in BRR of SCI3. · Transmits data H'00 to the host to indicate that the adjustment has ended.
Flash memory erase	Transmits data H'55 when data H'00 is received and no error occurs.	Checks flash memory data, erases all flash memory blocks in case of written data existing, and transmits data H'AA to host. (If erase could not be done, transmits data H'FF to host and aborts operation.)
Transfer of programming control program	Transmits number of bytes (N) of programming control program to be transferred as 2-byte data (low-order byte following high-order byte)	Echobacks the 2-byte received data to host.
Transfer of programming control program (repeated for N times)	Transmits 1-byte of programming control program	Echobacks received data to host and also transfers it to RAM.
Execution of Programming control program		Transmits 1-byte data H'AA to host. Branches to programming control program transferred to on-chip RAM and starts execution.

Table 6.9 Oscillating Frequencies (f_{OSC}) for which Automatic Adjustment of LSI Bit Rate Is Possible

Product Group	Host Bit Rate	Oscillating Frequencies (f_{OSC}) Range of LSI
F-ZTAT version of H8/38024 Group and F-ZTAT version of H8/38024R Group	4,800 bps	8 to 10 MHz
	2,400 bps	4 to 10 MHz
	1,200 bps	2 to 10 MHz
F-ZTAT version of H8/38124 Group	19,200 bps	16 to 20 MHz
	9,600 bps	8 to 20 MHz
	4,800 bps	6 to 20 MHz
	2,400 bps	2 to 20 MHz
	1,200 bps	2 to 20 MHz

6.7.2 Programming/Erasing in User Program Mode

The term user mode refers to the status when a user program is being executed. On-board programming/erasing of an individual flash memory block can also be performed in user program mode by branching to a user program/erase control program. The user must set branching conditions and provide on-board means of supplying programming data. The flash memory must contain the user program/erase control program or a program that provides the user program/erase control program from external memory. As the flash memory itself cannot be read during programming/erasing, transfer the user program/erase control program to on-chip RAM, as in boot mode. Figure 6.9 shows a sample procedure for programming/erasing in user program mode. Prepare a user program/erase control program in accordance with the description in section 6.8, Flash Memory Programming/Erasing.

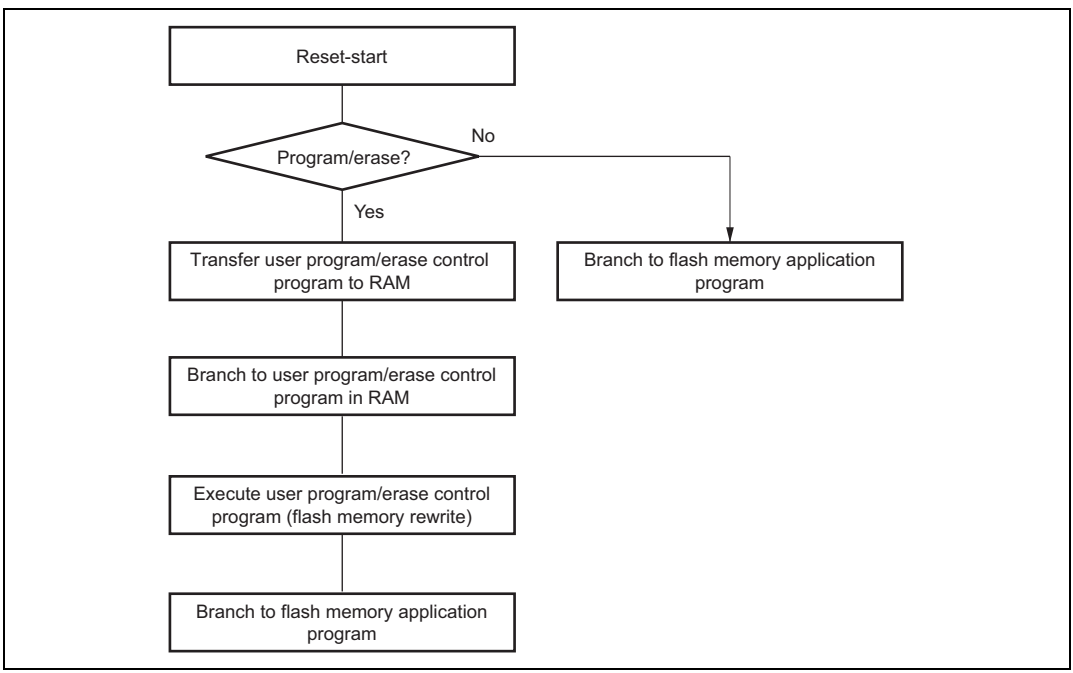

Figure 6.9 Programming/Erasing Flowchart Example in User Program Mode

6.7.3 Notes on On-Board Programming

1. You must use the system clock oscillator when programming or erasing flash memory on the H8/38124 Group. The on-chip oscillator should not be used for programming or erasing flash memory. See section 4.2, On-Chip Oscillator Selection Method, for information on switching between the system clock oscillator and the on-chip oscillator.
2. On the H8/38124 Group the watchdog timer operates after a reset is canceled. When executing a program prepared by the user that performs programming and erasing in the user mode, the watchdog timer's overflow cycle should be set to an appropriate value. Refer to section 6.8.1, Program/Program-Verify, for information on the appropriate watchdog timer overflow cycle for programming, and refer to section 6.8.2, Erase/Erase-Verify, for information on the appropriate watchdog timer overflow cycle for erasing.

6.8 Flash Memory Programming/Erasing

A software method using the CPU is employed to program and erase flash memory in the on-board programming modes. Depending on the FLMCR1 setting, the flash memory operates in one of the following four modes: Program mode, program-verify mode, erase mode, and erase-verify mode. The programming control program in boot mode and the user program/erase control program in user program mode use these operating modes in combination to perform programming/erasing. Flash memory programming and erasing should be performed in accordance with the descriptions in section 6.8.1, Program/Program-Verify and section 6.8.2, Erase/Erase-Verify, respectively.

6.8.1 Program/Program-Verify

When writing data or programs to the flash memory, the program/program-verify flowchart shown in figure 6.10 should be followed. Performing programming operations according to this flowchart will enable data or programs to be written to the flash memory without subjecting the chip to voltage stress or sacrificing program data reliability.

1. Programming must be done to an empty address. Do not reprogram an address to which programming has already been performed.
2. Programming should be carried out 128 bytes at a time. A 128-byte data transfer must be performed even if writing fewer than 128 bytes. In this case, H'FF data must be written to the extra addresses.
3. Prepare the following data storage areas in RAM: A 128-byte programming data area, a 128-byte reprogramming data area, and a 128-byte additional-programming data area. Perform

reprogramming data computation according to table 6.10, and additional programming data computation according to table 6.11.

4. Consecutively transfer 128 bytes of data in byte units from the reprogramming data area or additional-programming data area to the flash memory. The program address and 128-byte data are latched in the flash memory. The lower 8 bits of the start address in the flash memory destination area must be H'00 or H'80.

   Do not use RTS instruction from data transfer to setting P bit to 1. (This does not apply to the HD64F38124 and HD64F38122.)

5. The time during which the P bit is set to 1 is the programming time. Figure 6.12 shows the allowable programming times.
6. The watchdog timer (WDT) is set to prevent overprogramming due to program runaway, etc. An overflow cycle of approximately 6.6 ms is allowed.
7. For a dummy write to a verify address, write 1-byte data H'FF to an address whose lower 1 bit is b'0. Verify data can be read in word size from the address to which a dummy write was performed.

   Do not use RTS instruction from dummy write to verify data read. (This does not apply to the HD64F38124 and HD64F38122.)

8. The maximum number of repetitions of the program/program-verify sequence of the same bit is 1,000.

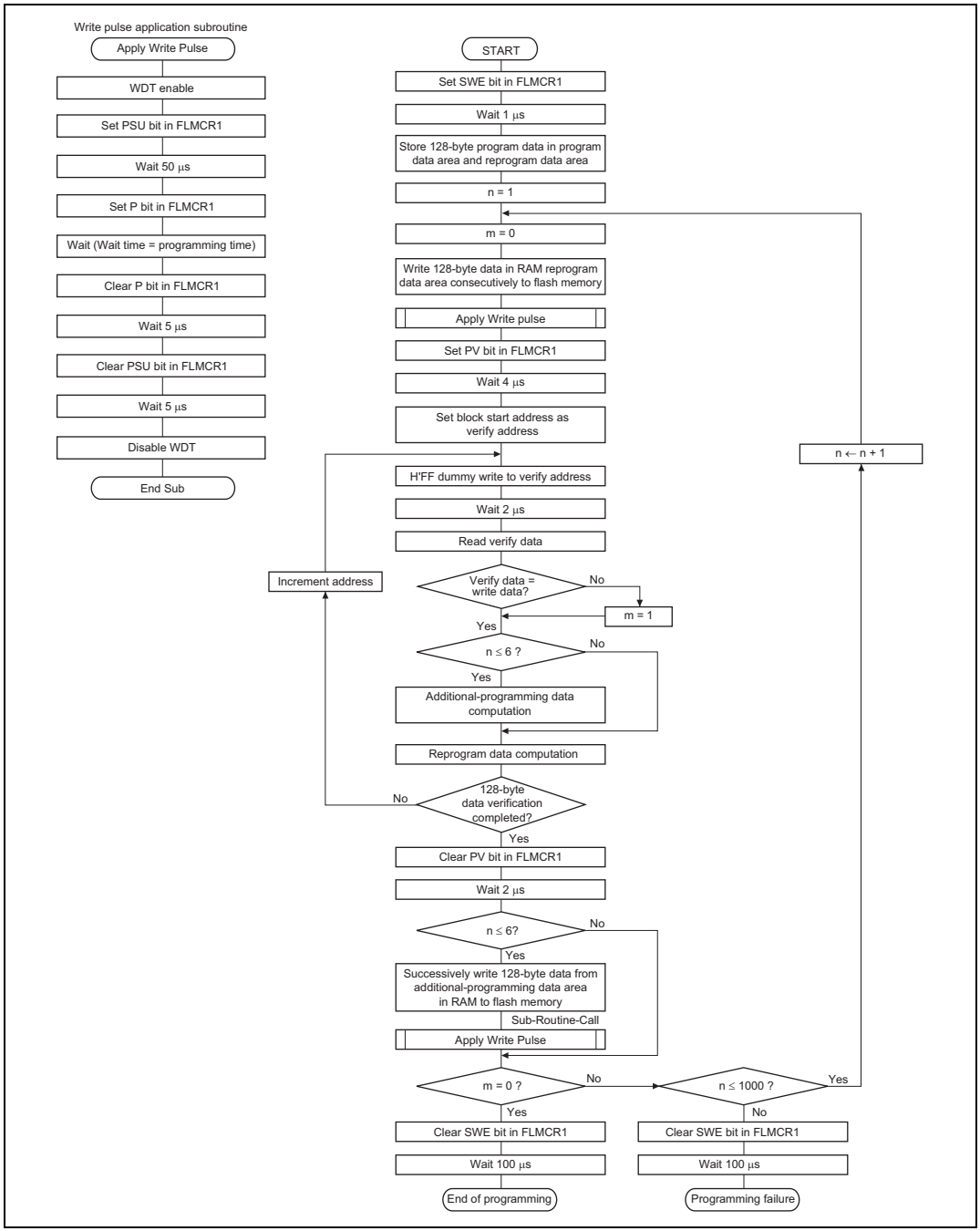

Figure 6.10 Program/Program-Verify Flowchart

Table 6.10 Reprogram Data Computation Table

Program Data	Verify Data	Reprogram Data	Comments
0	0	1	Programming completed
0	1	0	Reprogram bit
1	0	1	—
1	1	1	Remains in erased state

Table 6.11 Additional-Program Data Computation Table

Reprogram Data	Verify Data	Additional-Program Data	Comments
0	0	0	Additional-program bit
0	1	1	No additional programming
1	0	1	No additional programming
1	1	1	No additional programming

Table 6.12 Programming Time

n (Number of Writes)	Programming Time	In Additional Programming	Comments
1 to 6	30	10	
7 to 1,000	200	—	

Note: Time shown in μs.

6.8.2 Erase/Erase-Verify

When erasing flash memory, the erase/erase-verify flowchart shown in figure 6.11 should be followed.

1. Prewriting (setting erase block data to all 0s) is not necessary.
2. Erasing is performed in block units. Make only a single-bit specification in the erase block register (EBR). To erase multiple blocks, each block must be erased in turn.
3. The time during which the E bit is set to 1 is the flash memory erase time.
4. The watchdog timer (WDT) is set to prevent overerasing due to program runaway, etc. An overflow cycle of approximately 19.8 ms is allowed.
5. For a dummy write to a verify address, write 1-byte data H'FF to an address whose lower 1 bit is b'0. Verify data can be read in word size from the address to which a dummy write was performed.

   Do not use RTS instruction from dummy write to verify data read. (This does not apply to the HD64F38124 and HD64F38122.)
6. If the read data is not erased successfully, set erase mode again, and repeat the erase/erase-verify sequence as before. The maximum number of repetitions of the erase/erase-verify sequence is 100.

6.8.3 Interrupt Handling when Programming/Erasing Flash Memory

All interrupts, are disabled while flash memory is being programmed or erased, or while the boot program is executing, for the following three reasons:

1. Interrupt during programming/erasing may cause a violation of the programming or erasing algorithm, with the result that normal operation cannot be assured.
2. If interrupt exception handling starts before the vector address is written or during programming/erasing, a correct vector cannot be fetched and the CPU malfunctions.
3. If an interrupt occurs during boot program execution, normal boot mode sequence cannot be carried out.

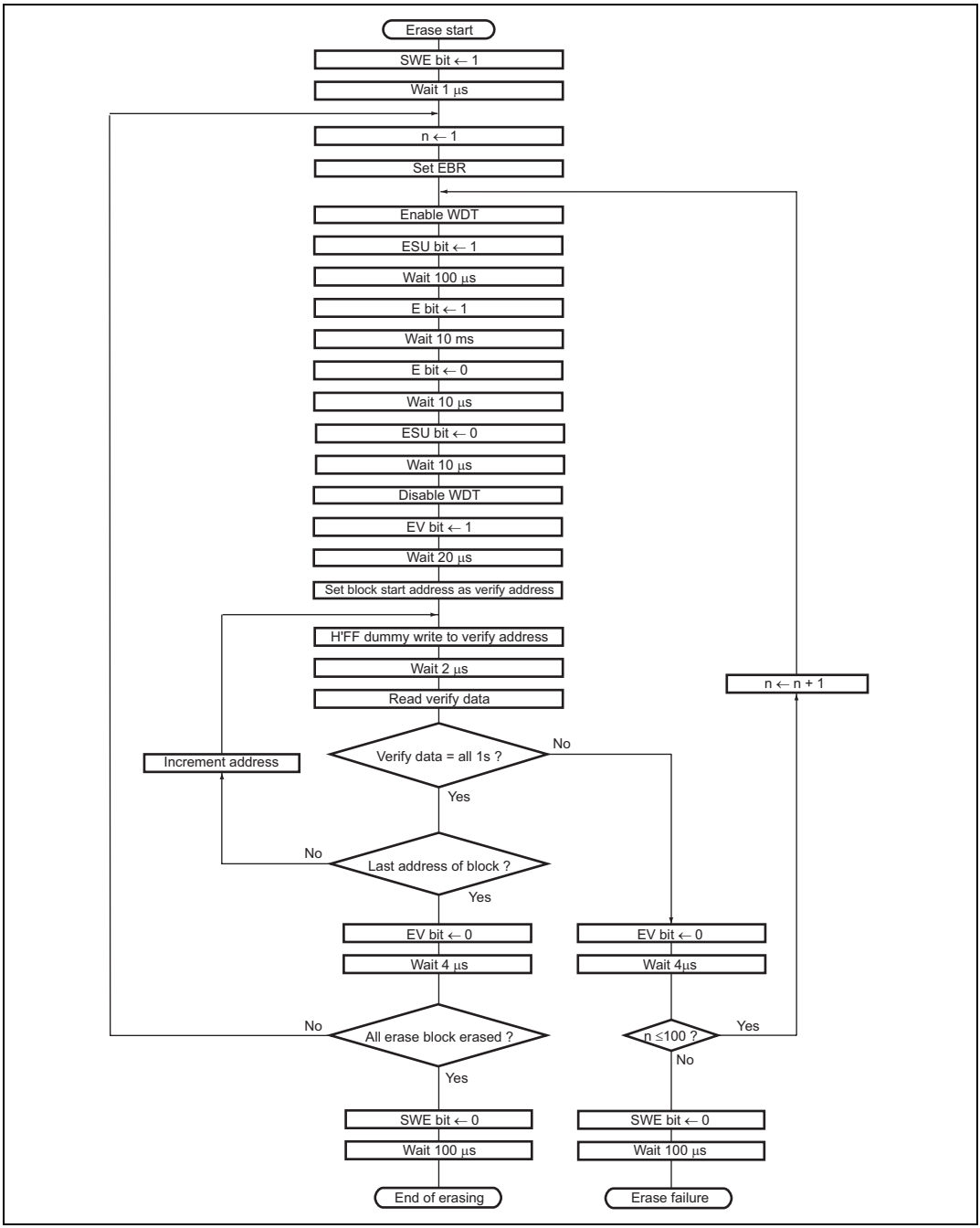

Figure 6.11 Erase/Erase-Verify Flowchart

6.9 Program/Erase Protection

There are three kinds of flash memory program/erase protection; hardware protection, software protection, and error protection.

6.9.1 Hardware Protection

Hardware protection refers to a state in which programming/erasing of flash memory is forcibly disabled or aborted because of a transition to reset, subactive mode, subsleep mode, watch mode, or standby mode. Flash memory control register 1 (FLMCR1), flash memory control register 2 (FLMCR2), and erase block register (EBR) are initialized. In a reset via the $\overline{\text{RES}}$ pin, the reset state is not entered unless the $\overline{\text{RES}}$ pin is held low until oscillation stabilizes after powering on. In the case of a reset during operation, hold the $\overline{\text{RES}}$ pin low for the $\overline{\text{RES}}$ pulse width specified in the AC Characteristics section.

6.9.2 Software Protection

Software protection can be implemented against programming/erasing of all flash memory blocks by clearing the SWE bit in FLMCR1. When software protection is in effect, setting the P or E bit in FLMCR1 does not cause a transition to program mode or erase mode. By setting the erase block register (EBR), erase protection can be set for individual blocks. When EBR is set to H'00, erase protection is set for all blocks.

6.9.3 Error Protection

In error protection, an error is detected when CPU runaway occurs during flash memory programming/erasing, or operation is not performed in accordance with the program/erase algorithm, and the program/erase operation is aborted. Aborting the program/erase operation prevents damage to the flash memory due to overprogramming or overerasing.

When the following errors are detected during programming/erasing of flash memory, the FLER bit in FLMCR2 is set to 1, and the error protection state is entered.

- When the flash memory of the relevant address area is read during programming/erasing (including vector read and instruction fetch)
- Immediately after exception handling excluding a reset during programming/erasing
- When a SLEEP instruction is executed during programming/erasing

The FLMCR1, FLMCR2, and EBR settings are retained, however program mode or erase mode is aborted at the point at which the error occurred. Program mode or erase mode cannot be re-entered by re-setting the P or E bit. However, PV and EV bit setting is enabled, and a transition can be made to verify mode. Error protection can be cleared only by a power-on reset.

6.10 Programmer Mode

In programmer mode, a PROM programmer can be used to perform programming/erasing via a socket adapter, just as a discrete flash memory. Use a PROM programmer that supports the MCU device type with the on-chip Renesas Technology 64-Kbyte flash memory (F-ZTAT64V3). A 10-MHz input clock is required. For the conditions for transition to programmer mode, see table 6.7.

6.10.1 Socket Adapter

The socket adapter converts the pin allocation of the HD64F38024, HD64F38024R, HD64F38124, and HD64F38122 to that of the discrete flash memory HN28F101. The address of the on-chip flash memory is H'0000 to H'7FFF. Figure 6.12(1) shows a socket-adapter-pin correspondence diagram of the HD64F38024 and HD64F38024R. Figure 6.12(2) shows a socket-adapter-pin correspondence diagram of the HD64F38124 and HD64F38122.

6.10.2 Programmer Mode Commands

The following commands are supported in programmer mode.

- Memory Read Mode
- Auto-Program Mode
- Auto-Erase Mode
- Status Read Mode

Status polling is used for auto-programming, auto-erasing, and status read modes. In status read mode, detailed internal information is output after the execution of auto-programming or auto-erasing. Table 6.13 shows the sequence of each command. In auto-programming mode, 129 cycles are required since 128 bytes are written at the same time. In memory read mode, the number of cycles depends on the number of address write cycles (n).

Table 6.13 Command Sequence in Programmer Mode

Command Name	Number of Cycles	1st Cycle			2nd Cycle		
		Mode	Address	Data	Mode	Address	Data
Memory read	1 + n	Write	X	H'00	Read	RA	Dout
Auto-program	129	Write	X	H'40	Write	WA	Din
Auto-erase	2	Write	X	H'20	Write	X	H'20
Status read	2	Write	X	H'71	Write	X	H'71

n: the number of address write cycles

HD64F38024, HD64F38024R		
Pin No.		Pin Name
FP-80A TFP-80C	FP-80B	
30	32	P71
36	38	P77
56	58	P92
21	23	P60
22	24	P61
23	25	P62
24	26	P63
25	27	P64
26	28	P65
27	29	P66
28	30	P67
69	71	P40
70	72	P41
63	65	P32
64	66	P33
65	67	P34
66	68	P35
67	69	P36
68	70	P37
29	31	P70
71	73	P42
31	33	P72
32	34	P73
33	35	P74
34	36	P75
35	37	P76
72	74	P43
52	54	Vcc
1	3	AVcc
6	8	X1
11	13	TEST
51	53	V1
52	54	Vcc
58	60	P94
59	61	P95
8	10	Vss
53	55	Vss
73	75	PB0
74	76	PB1
75	77	PB2
10, 9	12, 11	OSC1, OSC2
12	14	$\overline{\text{RES}}$
Other than the above		(OPEN)

Socket Adapter (Conversion to 32-Pin Arrangement)

Oscillator circuit

Power-on reset circuit

HN28F101 (32 Pins)	
Pin Name	Pin No.
FWE	1
A9	26
A16	2
A15	3
$\overline{\text{WE}}$	31
I/O0	13
I/O1	14
I/O2	15
I/O3	17
I/O4	18
I/O5	19
I/O6	20
I/O7	21
A0	12
A1	11
A2	10
A3	9
A4	8
A5	7
A6	6
A7	5
A8	27
$\overline{\text{OE}}$	24
A10	23
A11	25
A12	4
A13	28
A14	29
$\overline{\text{CE}}$	22
Vcc	32
Vss	16

[Legend]
FWE: Flash-write enable
I/O7 to I/O0: Data input/output
A16 to A0: Address input
$\overline{\text{CE}}$: Chip enable
$\overline{\text{OE}}$: Output enable
$\overline{\text{WE}}$: Write enable

Note: The oscillation frequency of the oscillator circuit should be 10 MHz.

Figure 6.12(1) Socket Adapter Pin Correspondence Diagram (HD64F38024, HD64F38024R)

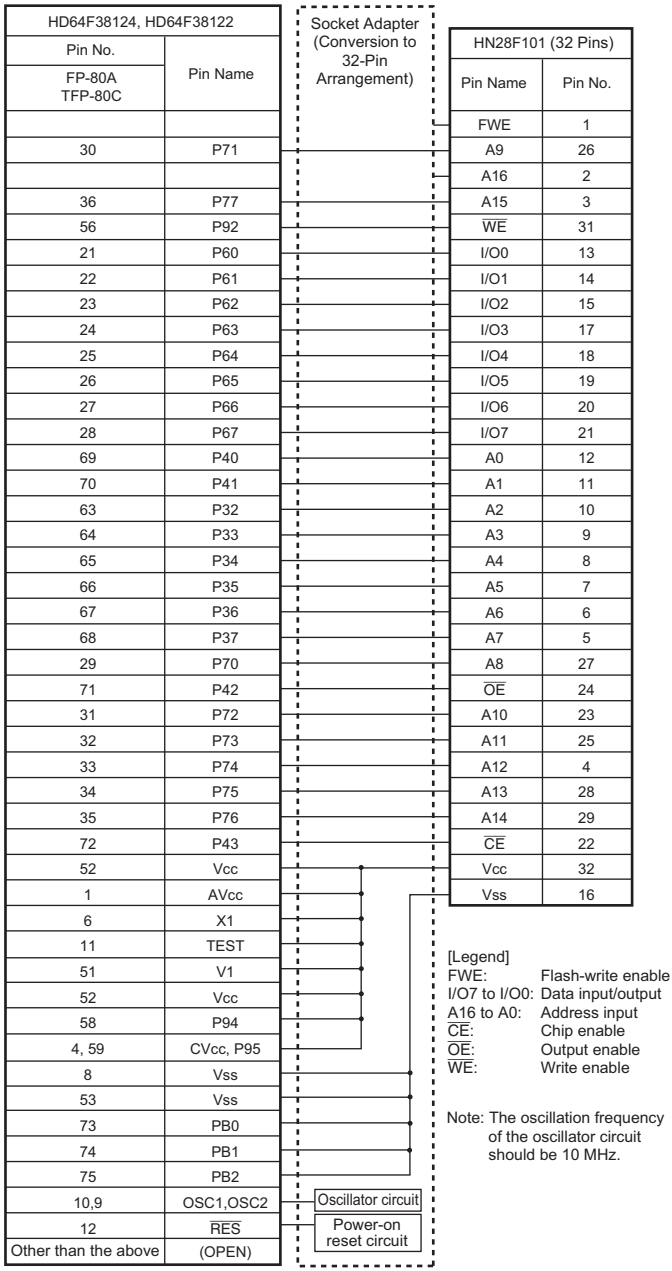

Figure 6.12(2) Socket Adapter Pin Correspondence Diagram (HD64F38124, HD64F38122)

6.10.3 Memory Read Mode

1. After completion of auto-program/auto-erase/status read operations, a transition is made to the command wait state. When reading memory contents, a transition to memory read mode must first be made with a command write, after which the memory contents are read. Once memory read mode has been entered, consecutive reads can be performed.
2. In memory read mode, command writes can be performed in the same way as in the command wait state.
3. After powering on, memory read mode is entered.
4. Tables 6.14 to 6.16 show the AC characteristics.

Table 6.14 AC Characteristics in Transition to Memory Read Mode

Conditions: V_{CC} = 3.3 V ±0.3 V, V_{SS} = 0 V, T_a = 25°C ±5°C

Item	Symbol	Min	Max	Unit	Notes
Command write cycle	t_{nxtc}	20	—	µs	Figure 6.13
$\overline{CE}$ hold time	t_{ceh}	0	—	ns	
$\overline{CE}$ setup time	t_{ces}	0	—	ns	
Data hold time	t_{dh}	50	—	ns	
Data setup time	t_{ds}	50	—	ns	
Write pulse width	t_{wep}	70	—	ns	
$\overline{WE}$ rise time	t_r	—	30	ns	
$\overline{WE}$ fall time	t_f	—	30	ns	

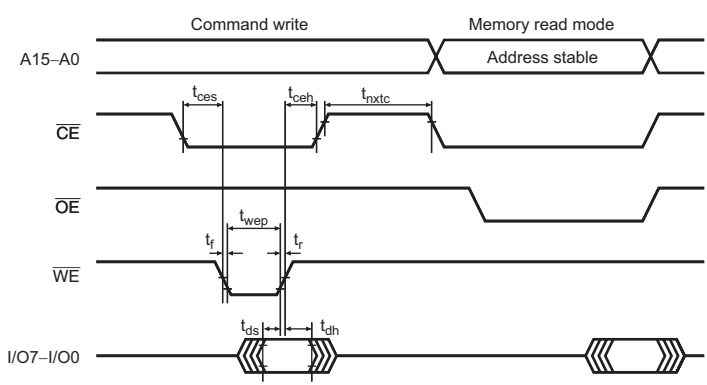

Note: Data is latched on the rising edge of $\overline{WE}$.

Figure 6.13 Timing Waveforms for Memory Read after Memory Write

Table 6.15 AC Characteristics in Transition from Memory Read Mode to Another Mode

Conditions: V_{CC} = 3.3 V ±0.3 V, V_{SS} = 0 V, T_a = 25°C ±5°C

Item	Symbol	Min	Max	Unit	Notes
Command write cycle	t_{nxtc}	20	—	µs	Figure 6.14
$\overline{CE}$ hold time	t_{ceh}	0	—	ns	
$\overline{CE}$ setup time	t_{ces}	0	—	ns	
Data hold time	t_{dh}	50	—	ns	
Data setup time	t_{ds}	50	—	ns	
Write pulse width	t_{wep}	70	—	ns	
$\overline{WE}$ rise time	t_r	—	30	ns	
$\overline{WE}$ fall time	t_f	—	30	ns	

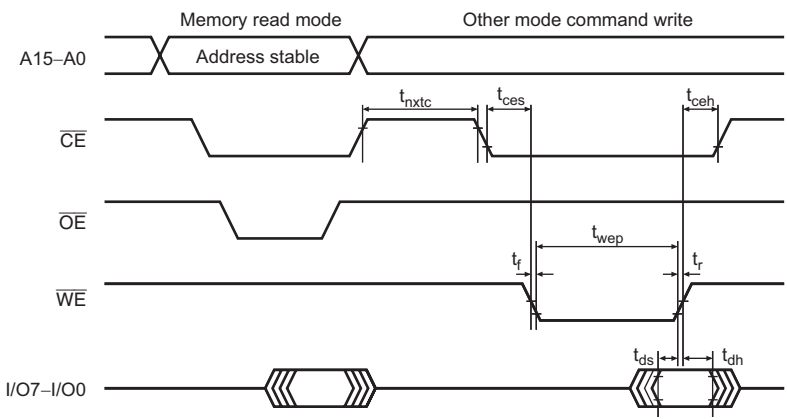

Note: Do not enable $\overline{WE}$ and $\overline{OE}$ at the same time.

Figure 6.14 Timing Waveforms in Transition from Memory Read Mode to Another Mode

Table 6.16 AC Characteristics in Memory Read Mode

Conditions: V_{CC} = 3.3 V ±0.3 V, V_{SS} = 0 V, T_a = 25°C ±5°C

Item	Symbol	Min	Max	Unit	Notes
Access time	t_{acc}	—	20	μs	Figure 6.15
$\overline{CE}$ output delay time	t_{ce}	—	150	ns	Figure 6.16
$\overline{OE}$ output delay time	t_{oe}	—	150	ns	
Output disable delay time	t_{df}	—	100	ns	
Data output hold time	t_{oh}	5	—	ns	

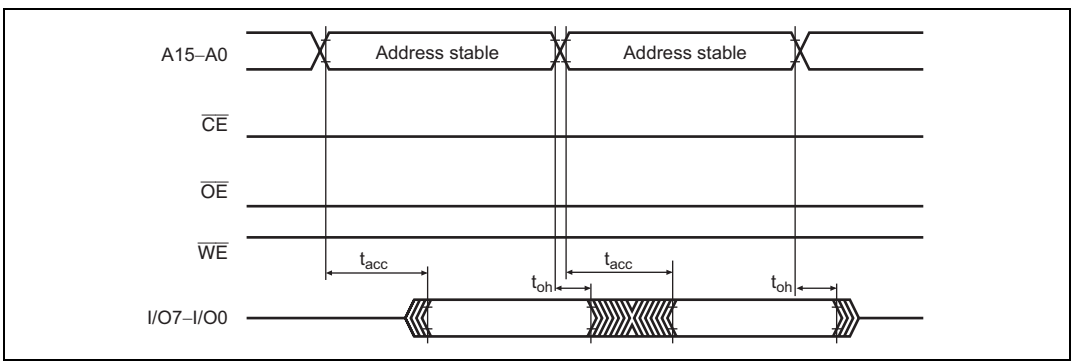

Figure 6.15 $\overline{CE}$ and $\overline{OE}$ Enable State Read Timing Waveforms

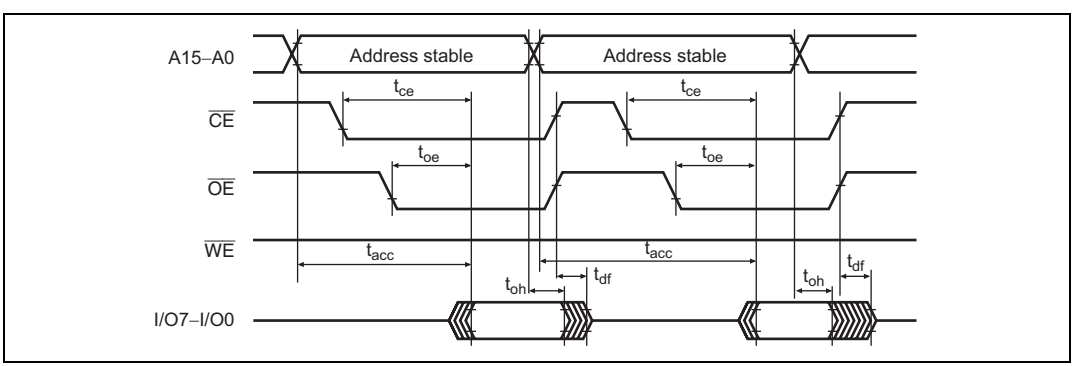

Figure 6.16 $\overline{CE}$ and $\overline{OE}$ Clock System Read Timing Waveforms

6.10.4 Auto-Program Mode

1. When reprogramming previously programmed addresses, perform auto-erasing before auto-programming.
2. Perform auto-programming once only on the same address block. It is not possible to program an address block that has already been programmed.
3. In auto-program mode, 128 bytes are programmed simultaneously. This should be carried out by executing 128 consecutive byte transfers. A 128-byte data transfer is necessary even when programming fewer than 128 bytes. In this case, H'FF data must be written to the extra addresses.
4. The lower 7 bits of the transfer address must be low. If a value other than an effective address is input, processing will switch to a memory write operation but a write error will be flagged.
5. Memory address transfer is performed in the second cycle (figure 6.17). Do not perform transfer after the third cycle.
6. Do not perform a command write during a programming operation.
7. Perform one auto-program operation for a 128-byte block for each address. Two or more additional programming operations cannot be performed on a previously programmed address block.
8. Confirm normal end of auto-programming by checking I/O6. Alternatively, status read mode can also be used for this purpose (I/O7 status polling uses the auto-program operation end decision pin).
9. Status polling I/O6 and I/O7 pin information is retained until the next command write. As long as the next command write has not been performed, reading is possible by enabling $\overline{CE}$ and $\overline{OE}$.
10. Table 6.17 shows the AC characteristics.

Table 6.17 AC Characteristics in Auto-Program Mode

Conditions: V_{CC} = 3.3 V ±0.3 V, V_{SS} = 0 V, T_a = 25°C ±5°C

Item	Symbol	Min	Max	Unit	Notes
Command write cycle	t_{nxtc}	20	—	µs	Figure 6.17
$\overline{CE}$ hold time	t_{ceh}	0	—	ns	
$\overline{CE}$ setup time	t_{ces}	0	—	ns	
Data hold time	t_{dh}	50	—	ns	
Data setup time	t_{ds}	50	—	ns	
Write pulse width	t_{wep}	70	—	ns	
Status polling start time	t_{wsts}	1	—	ms	
Status polling access time	t_{spa}	—	150	ns	
Address setup time	t_{as}	0	—	ns	
Address hold time	t_{ah}	60	—	ns	
Memory write time	t_{write}	1	3000	ms	
$\overline{WE}$ rise time	t_r	—	30	ns	
$\overline{WE}$ fall time	t_f	—	30	ns	

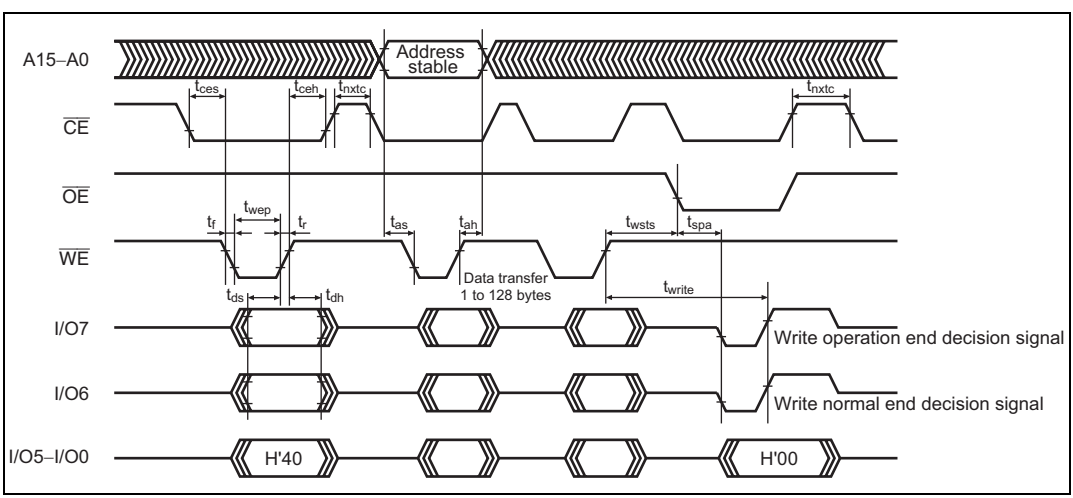

Figure 6.17 Auto-Program Mode Timing Waveforms

6.10.5 Auto-Erase Mode

1. Auto-erase mode supports only entire memory erasing.
2. Do not perform a command write during auto-erasing.
3. Confirm normal end of auto-erasing by checking I/O6. Alternatively, status read mode can also be used for this purpose (I/O7 status polling uses the auto-erase operation end decision pin).
4. Status polling I/O6 and I/O7 pin information is retained until the next command write. As long as the next command write has not been performed, reading is possible by enabling $\overline{CE}$ and $\overline{OE}$.
5. Table 6.18 shows the AC characteristics.

Table 6.18 AC Characteristics in Auto-Erase Mode

Conditions: V_{CC} = 3.3 V ±0.3 V, V_{SS} = 0 V, T_a = 25°C ±5°C

Item	Symbol	Min	Max	Unit	Notes
Command write cycle	t_{nxtc}	20	—	µs	Figure 6.18
$\overline{CE}$ hold time	t_{ceh}	0	—	ns	
$\overline{CE}$ setup time	t_{ces}	0	—	ns	
Data hold time	t_{dh}	50	—	ns	
Data setup time	t_{ds}	50	—	ns	
Write pulse width	t_{wep}	70	—	ns	
Status polling start time	t_{ests}	1	—	ms	
Status polling access time	t_{spa}	—	150	ns	
Memory erase time	t_{erase}	100	40000	ms	
$\overline{WE}$ rise time	t_r	—	30	ns	
$\overline{WE}$ fall time	t_f	—	30	ns	

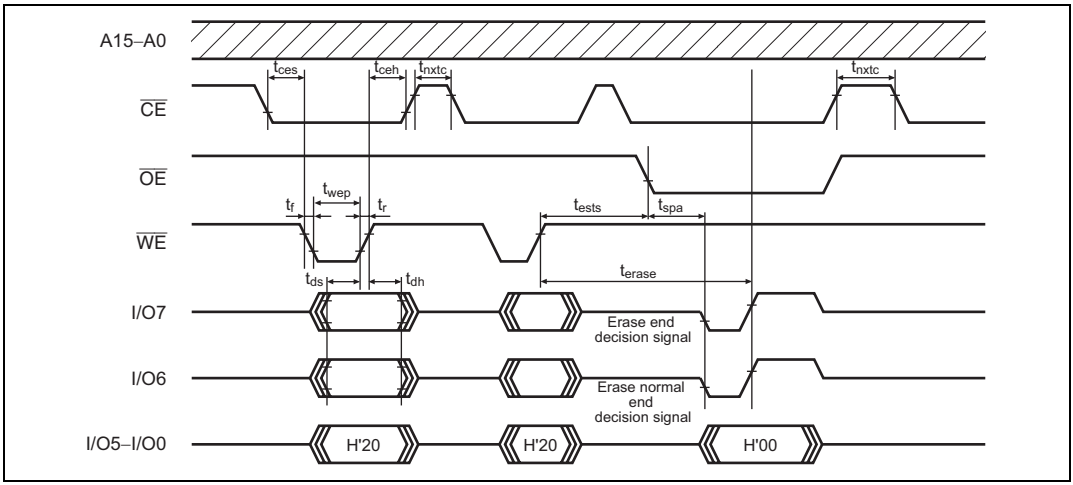

Figure 6.18 Auto-Erase Mode Timing Waveforms

6.10.6 Status Read Mode

1. Status read mode is provided to identify the kind of abnormal end. Use this mode when an abnormal end occurs in auto-program mode or auto-erase mode.
2. The return code is retained until a command write other than a status read mode command write is executed.
3. Table 6.19 shows the AC characteristics and 6.20 shows the return codes.

Table 6.19 AC Characteristics in Status Read Mode

Conditions: V_{CC} = 3.3 V ±0.3 V, V_{SS} = 0 V, T_a = 25°C ±5°C

Item	Symbol	Min	Max	Unit	Notes
Read time after command write	t_{nxtc}	20	—	µs	Figure 6.19
$\overline{CE}$ hold time	t_{ceh}	0	—	ns	
$\overline{CE}$ setup time	t_{ces}	0	—	ns	
Data hold time	t_{dh}	50	—	ns	
Data setup time	t_{ds}	50	—	ns	
Write pulse width	t_{wep}	70	—	ns	
$\overline{OE}$ output delay time	t_{oe}	—	150	ns	
Disable delay time	t_{df}	—	100	ns	
$\overline{CE}$ output delay time	t_{ce}	—	150	ns	
$\overline{WE}$ rise time	t_r	—	30	ns	
$\overline{WE}$ fall time	t_f	—	30	ns	

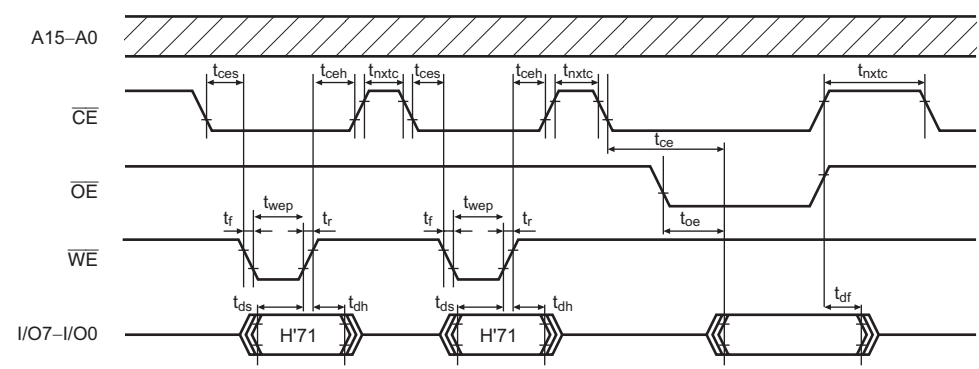

Note: I/O2 and I/O3 are undefined.

Figure 6.19 Status Read Mode Timing Waveforms

Table 6.20 Status Read Mode Return Codes

Pin Name	Initial Value	Indications
I/O7	0	1: Abnormal end 0: Normal end
I/O6	0	1: Command error 0: Otherwise
I/O5	0	1: Programming error 0: Otherwise
I/O4	0	1: Erasing error 0: Otherwise
I/O3	0	—
I/O2	0	—
I/O1	0	1: Over counting of writing or erasing 0: Otherwise
I/O0	0	1: Effective address error 0: Otherwise

6.10.7 Status Polling

1. The I/O7 status polling flag indicates the operating status in auto-program/auto-erase mode.
2. The I/O6 status polling flag indicates a normal or abnormal end in auto-program/auto-erase mode.

Table 6.21 Status Polling Output Truth Table

I/O7	I/O6	I/O0 to 5	Status
0	0	0	During internal operation
1	0	0	Abnormal end
1	1	0	Normal end
0	1	0	—

6.10.8 Programmer Mode Transition Time

Commands cannot be accepted during the oscillation stabilization period or the programmer mode setup period. After the programmer mode setup time, a transition is made to memory read mode.

Table 6.22 Stipulated Transition Times to Command Wait State

Item	Symbol	Min	Max	Unit	Notes
Oscillation stabilization time(crystal oscillator)	T_{osc1}	10	—	ms	Figure 6.20
Oscillation stabilization time(ceramic oscillator)	T_{osc1}	5	—	ms	
Programmer mode setup time	T_{bmv}	10	—	ms	
Vcc hold time	T_{dwn}	0	—	ms	

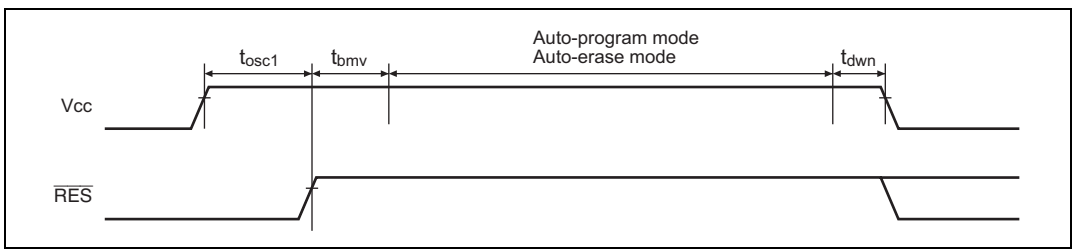

Figure 6.20 Oscillation Stabilization Time, Boot Program Transfer Time, and Power-Down Sequence

6.10.9 Notes on Memory Programming

1. When performing programming using programmer mode on a chip that has been programmed/erased in an on-board programming mode, auto-erasing is recommended before carrying out auto-programming.
2. The flash memory is initially in the erased state when the device is shipped by Renesas Technology. For other chips for which the erasure history is unknown, it is recommended that auto-erasing be executed to check and supplement the initialization (erase) level.

6.11 Power-Down States for Flash Memory

In user mode, the flash memory will operate in either of the following states:

- Normal operating mode
  The flash memory can be read and written to at high speed.
- Power-down operating mode
  The power supply circuit of the flash memory is partly halted and can be read under low power consumption.
- Standby mode
  All flash memory circuits are halted.

Table 6.23 shows the correspondence between the operating modes of this LSI and the flash memory. In subactive mode, the flash memory can be set to operate in power-down mode with the PDWND bit in FLPWCR. When the flash memory returns to its normal operating state from power-down mode or standby mode, a period to stabilize the power supply circuits that were stopped is needed. When the flash memory returns to its normal operating state, bits STS2 to STS0 in SYSCR1 must be set to provide a wait time of at least 20 µs, even when the external clock is being used.

Table 6.23 Flash Memory Operating States

	Flash Memory Operating State	
LSI Operating State	**PDWND = 0 (Initial value)**	**PDWND = 1**
Active mode	Normal operating mode	Normal operating mode
Subactive mode	Power-down mode	Normal operating mode
Sleep mode	Normal operating mode	Normal operating mode
Subsleep mode	Standby mode	Standby mode
Standby mode	Standby mode	Standby mode
Watch mode	Standby mode	Standby mode

Section 7 RAM

7.1 Overview

The H8/38024, H8/38023, H8/38022, H8/38124, H8/38123, H8/38122, H8/38024S, H8/38023S, and H8/38022S have 1 Kbyte of high-speed static RAM on-chip, and the H8/38021, H8/38020, H8/38121, H8/38120, H8/38021S, and H8/38020S have 512 bytes. The RAM is connected to the CPU by a 16-bit data bus, allowing high-speed 2-state access for both byte data and word data.

7.1.1 Block Diagram

Figure 7.1 shows a block diagram of the on-chip RAM.

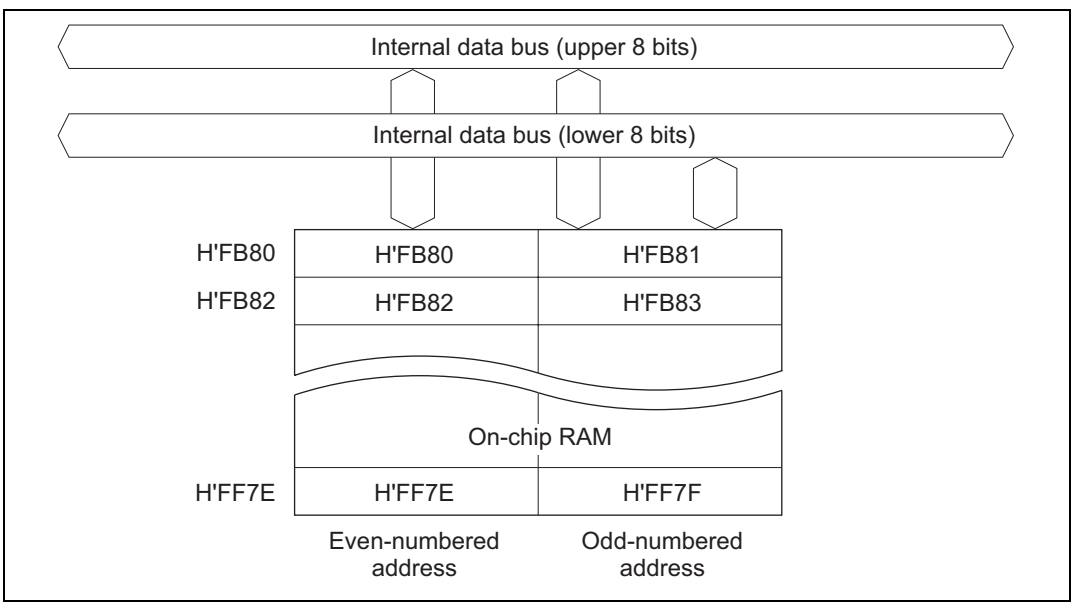

Figure 7.1 RAM Block Diagram (H8/38024)

Section 8 I/O Ports

8.1 Overview

The LSI is provided with five 8-bit I/O ports, two 4-bit I/O ports, one 3-bit I/O port, one 8-bit input-only port, one 1-bit input-only port, and one 6-bit output-only port. Table 8.1 indicates the functions of each port.

Each port has of a port control register (PCR) that controls input and output, and a port data register (PDR) for storing output data. Input or output can be assigned to individual bits.
See section 2.9.2, Notes on Bit Manipulation, for information on executing bit-manipulation instructions to write data in PCR or PDR.

Ports 5, 6, 7, 8, and A are also used as liquid crystal display segment and common pins, selectable in 4-bit units.

Block diagrams of each port are given in Appendix C, I/O Port Block Diagrams.

Table 8.1 Port Functions

Port	Description	Pins	Other Functions	Function Switching Registers
Port 1	• 4-bit I/O port • MOS input pull-up option	$P1_7/\overline{IRQ_3}$/TMIF	External interrupt 3, timer event input pin TMIF	PMR1 TCRF
		$P1_6$ *1	None	
		$P1_4/\overline{IRQ_4}/\overline{ADTRG}$	External interrupt 4, A/D converter external trigger	PMR1 AMR
		$P1_3$/TMIG	Timer G input capture	PMR1 PMR2
Port 3	• 8-bit I/O port • MOS input pull-up option • Large-current port*2 • MOS open drain output selectable (only $P3_5$)	$P3_7$/AEVL $P3_6$/AEVH	Asynchronous counter event input pins AEVL, AEVH	PMR3 ECCR
		$P3_5$ to $P3_3$	None	PMR2
		$P3_2$, TMOFH $P3_1$, TMOFL	Timer F output compare output	PMR3
		$P3_0$/UD	Timer C count up/down selection input	PMR3

Port	Description	Pins	Other Functions	Function Switching Registers
Port 4	• 1-bit input port • 3-bit I/O port	$P4_3/\overline{IRQ}_0$	External interrupt 0	PMR2
		$P4_2/TXD_{32}$ $P4_1/RXD_{32}$ $P4_0/SCK_{32}$	SCI3 data output (TXD_{32}), data input (RXD_{32}), clock input/output (SCK_{32})	SCR3 SMR3 SPCR
Port 5	• 8-bit I/O port • MOS input pull-up option	$P5_7$ to $P5_0$/ $\overline{WKP}_7$ to $\overline{WKP}_0$/ SEG_8 to SEG_1	Wakeup input ($\overline{WKP}_7$ to $\overline{WKP}_0$), segment output (SEG_8 to SEG_1)	PMR5 LPCR
Port 6	• 8-bit I/O port • MOS input pull-up option	$P6_7$ to $P6_0$/ SEG_{16} to SEG_9	Segment output (SEG_{16} to SEG_9)	LPCR
Port 7	• 8-bit I/O port	$P7_7$ to $P7_0$/ SEG_{24} to SEG_{17}	Segment output (SEG_{24} to SEG_{17})	LPCR
Port 8	• 8-bit I/O port	$P8_7$ to $P8_0$/ SEG_{32} to SEG_{25}	Segment output (SEG_{32} to SEG_{25})	LPCR
Port 9	• Dedicated 6-bit output port • High-voltage, large-current port*3	$P9_5$ to $P9_2$ ($P9_5$, $P9_4$, $P9_2$, $P9_3/V_{ref}$)*4	None (LVD reference voltage external input pin)*4	(LVDSR)*4
		$P9_1$, $P9_0$/ PWM2, PWM1	10-bit PWM output	PMR9
	• High-voltage port*3	IRQAEC	None	
Port A	• 4-bit I/O port	PA_3 to PA_0/ COM_4 to COM_1	Common output (COM_4 to COM_1)	LPCR
Port B	• Dedicated 8-bit input port	PB_7 to PB_4/ AN_7 to AN_4	A/D converter analog input (AN_7 to AN_4)	AMR
		$PB_3/AN_3/\overline{IRQ}_1$	A/D converter analog input (AN_3), external interrupt 1, timer event input (TMIC)	AMR PMRB TMC
		PB_2/AN_2	A/D converter analog input	AMR
		PB_1/AN_1/(extU)*4 PB_0/AN_0/(extD)*4	A/D converter analog input (LVD detect voltage external input pin)*4	AMR (LVDCR)*4

Notes: 1. Pin 16 and the associated function are not implemented on the H8/38124 Group.
2. Applies to the HD64338024, HD64338023, HD64338022, HD64338021, HD64338020, and H8/38124 Group only.
3. Standard voltage on H8/38024S Group and H8/38124 Group.
4. Applies to H8/38124 Group only.

8.2 Port 1

8.2.1 Overview

Port 1 is a 4-bit I/O port. Figure 8.1 shows its pin configuration.

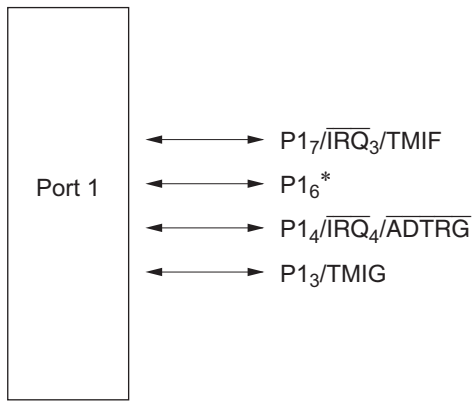

Note: * Pin 16 and the associated function are not implemented on the H8/38124 Group.

Figure 8.1 Port 1 Pin Configuration

8.2.2 Register Configuration and Description

Table 8.2 shows the port 1 register configuration.

Table 8.2 Port 1 Registers

Name	Abbr.	R/W	Initial Value	Address
Port data register 1	PDR1	R/W	—	H'FFD4
Port control register 1	PCR1	W	—	H'FFE4
Port pull-up control register 1	PUCR1	R/W	—	H'FFE0
Port mode register 1	PMR1	R/W	—	H'FFC8
Port mode register 2	PMR2	R/W	H'D8	H'FFC9

Port Data Register 1 (PDR1)

Bit	7	6	5	4	3	2	1	0
	$P1_7$	$P1_6$*	—	$P1_4$	$P1_3$	—	—	—
Initial value	0	0	—	0	0	—	—	—
Read/Write	R/W	R/W	—	R/W	R/W	—	—	—

PDR1 is an 8-bit register that stores data for port 1 pins $P1_7$, $P1_6$*, $P1_4$, and $P1_3$. If port 1 is read while PCR1 bits are set to 1, the values stored in PDR1 are read, regardless of the actual pin states. If port 1 is read while PCR1 bits are cleared to 0, the pin states are read.

Note: * Pin 1_6 and the associated function are not implemented on the H8/38124 Group.
The register is both readable and writeable.

Port Control Register 1 (PCR1)

Bit	7	6	5	4	3	2	1	0
	$PCR1_7$	$PCR1_6$*	—	$PCR1_4$	$PCR1_3$	—	—	—
Initial value	0	0	—	0	0	—	—	—
Read/Write	W	W	W	W	W	W	W	W

PCR1 is an 8-bit register for controlling whether each of the port 1 pins $P1_7$, $P1_6$*, $P1_4$, and $P1_3$ functions as an input pin or output pin. Setting a PCR1 bit to 1 makes the corresponding pin an output pin, while clearing the bit to 0 makes the pin an input pin. The settings in PCR1 and in PDR1 are valid only when the corresponding pin is designated in PMR1 as a general I/O pin.

PCR1 is a write-only register, which is always read as all 1s.

Note: * Pin 1_6 and the associated function are not implemented on the H8/38124 Group.

Port Pull-Up Control Register 1 (PUCR1)

Bit	7	6	5	4	3	2	1	0
	$PUCR1_7$	$PUCR1_6$*	—	$PUCR1_4$	$PUCR1_3$	—	—	—
Initial value	0	0	—	0	0	—	—	—
Read/Write	R/W	R/W	W	R/W	R/W	W	W	W

PUCR1 controls whether the MOS pull-up of each of the port 1 pins $P1_7$, $P1_6$*, $P1_4$, and $P1_3$ is on or off. When a PCR1 bit is cleared to 0, setting the corresponding PUCR1 bit to 1 turns on the MOS pull-up for the corresponding pin, while clearing the bit to 0 turns off the MOS pull-up.

Note: * Pin 1_6 and the associated function are not implemented on the H8/38124 Group.
The register is both readable and writeable.

Port Mode Register 1 (PMR1)

Bit	7	6	5	4	3	2	1	0
	IRQ3	—	—	IRQ4	TMIG	—	—	—
Initial value	0	1	—	0	0	—	1	—
Read/Write	R/W	—	W	R/W	R/W	W	—	W

PMR1 is an 8-bit read/write register, controlling the selection of pin functions for port 1 pins.

Bit 7—$P1_7/\overline{IRQ_3}$/TMIF Pin Function Switch (IRQ3)

This bit selects whether pin $P1_7/\overline{IRQ_3}$/TMIF is used as $P1_7$ or as $\overline{IRQ_3}$/TMIF.

Bit 7 IRQ3	Description	
0	Functions as $P1_7$ I/O pin	(initial value)
1	Functions as $\overline{IRQ_3}$/TMIF input pin	

Note: Rising or falling edge sensing can be designated for $\overline{IRQ_3}$, TMIF. For details on TMIF settings, see 3. Timer Control Register F (TCRF) in section 9.4.2, Register Descriptions.

Bit 6—Reserved

This bit is reserved; it is always read as 1 and cannot be modified.

Bit 5—Reserved

This bit is reserved; it can only be written with 0.

Bit 4—$P1_4/\overline{IRQ_4}/\overline{ADTRG}$ Pin Function Switch (IRQ4)

This bit selects whether pin $P1_4/\overline{IRQ_4}/\overline{ADTRG}$ is used as $P1_4$ or as $\overline{IRQ_4}/\overline{ADTRG}$.

Bit 4 IRQ4	Description	
0	Functions as $P1_4$ I/O pin	(initial value)
1	Functions as $\overline{IRQ_4}/\overline{ADTRG}$ input pin	

Note: For details of $\overline{ADTRG}$ pin setting, see section 12.3.2, Start of A/D Conversion by External Trigger Input.

Bit 3—$P1_3$/TMIG Pin Function Switch (TMIG)

This bit selects whether pin $P1_3$/TMIG is used as $P1_3$ or as TMIG.

Bit 3 TMIG	Description	
0	Functions as $P1_3$ I/O pin	(initial value)
1	Functions as TMIG input pin	

Bits 2 and 0—Reserved

These bits are reserved; they can only be written with 0.

Bit 1—Reserved

This bit is reserved; it is always read as 1 and cannot be modified.

Port Mode Register 2 (PMR2)

Bit	7	6	5	4	3	2	1	0
	—	—	POF1	—	—	WDCKS	NCS	IRQ0
Initial value	1	1	0	1	1	0	0	0
Read/Write	—	—	R/W	—	—	R/W	R/W	R/W

PMR2 is an 8-bit read/write register. It controls whether the PMOS transistor internal to $P3_5$ is on or off, the selection of the watchdog timer clock, the selection of TMIG noise cancellation, and switching of the $P4_3/\overline{IRQ_0}$ pin functions.

Upon reset, PMR2 is initialized to H'D8.

This section only deals with the bits related to timer G and the watchdog timer. For the functions of the bits, see the descriptions of port 3 (POF1) and port 4 (IRQ0).

Bit 2—Watchdog Timer Source Clock (WDCKS)

This bit selects the watchdog timer source clock. Note that stabilization times for the H8/38024, H8/38024S, and H8/38024R Group and for the H8/38124 Group are different.

- **H8/38024, H8/38024S, H8/38024R Group**

Bit 2 WDCKS	Description	
0	Selects ϕ/8192	(initial value)
1	Selects ϕ_W/32	

- **H8/38124 Group**

Bit 2 WDCKS	Description	
0	Selects clock based on timer mode register W (TMW) setting*	(initial value)
1	Selects ϕ_W/32	

Note: * See section 9.6, Watchdog Timer, for details.

Bit 1—TMIG Noise Canceller Select (NCS)

This bit selects controls the noise cancellation circuit of the input capture input signal (TMIG).

Bit 1 NCS	Description	
0	No noise cancellation circuit	(initial value)
1	Noise cancellation circuit	

8.2.3 Pin Functions

Table 8.3 shows the port 1 pin functions.

Table 8.3 Port 1 Pin Functions

Pin	Pin Functions and Selection Method
$P1_7/\overline{IRQ_3}$/TMIF	The pin function depends on bit IRQ3 in PMR1, bits CKSL2 to CKSL0 in TCRF, and bit $PCR1_7$ in PCR1.

IRQ_3	0		1	
$PCR1_7$	0	1	*	
CKSL2 to CKSL0	*		Not 0**	0**
Pin function	$P1_7$ input pin	$P1_7$ output pin	$\overline{IRQ_3}$ input pin	$\overline{IRQ_3}$/TMIF input pin

Note: When this pin is used as the TMIF input pin, clear bit IEN3 to 0 in IENR1 to disable the IRQ_3 interrupt.

$P1_6$	The pin function depends on bit $PCR1_6$ in PCR1.

$PCR1_6$	0	1
Pin function	$P1_6$ input pin	$P1_6$ output pin

Note: Pin 16 and the associated function are not implemented on the H8/38124 Group.

$P1_4/\overline{IRQ_4}$ $\overline{ADTRG}$	The pin function depends on bit IRQ4 in PMR1, bit TRGE in AMR, and bit $PCR1_4$ in PCR1.

IRQ4	0		1	
$PCR1_4$	0	1	*	
TRGE	*		0	1
Pin function	$P1_4$ input pin	$P1_4$ output pin	$\overline{IRQ_4}$ input pin	$\overline{IRQ_4}/\overline{ADTRG}$ input pin

Note: When this pin is used as the $\overline{ADTRG}$ input pin, clear bit IEN4 to 0 in IENR1 to disable the IRQ_4 interrupt.

$P1_3$/TMIG	The pin function depends on bit TMIG in PMR1 and bit $PCR1_3$ in PCR1.

TMIG	0		1
$PCR1_3$	0	1	*
Pin function	$P1_3$ input pin	$P1_3$ output pin	TMIG input pin

*: Don't care

8.2.4 Pin States

Table 8.4 shows the port 1 pin states in each operating mode.

Table 8.4 Port 1 Pin States

Pins	Reset	Sleep	Subsleep	Standby	Watch	Subactive	Active
$P1_7/\overline{IRQ_3}$/TMIF $P1_6$*1 $P1_4/\overline{IRQ_4}/\overline{ADTRG}$ $P1_3$/TMIG	High-impedance	Retains previous state	Retains previous state	High-impedance*2	Retains previous state	Functional	Functional

Notes: 1. Pin 1_6 and the associated function are not implemented on the H8/38124 Group.
2. A high-level signal is output when the MOS pull-up is in the on state.

8.2.5 MOS Input Pull-Up

Port 1 has a built-in MOS input pull-up function that can be controlled by software. When a PCR1 bit is cleared to 0, setting the corresponding PUCR1 bit to 1 turns on the MOS input pull-up for that pin. The MOS input pull-up function is in the off state after a reset.

$PCR1_n$	0	0	1
$PUCR1_n$	0	1	*
MOS input pull-up	Off	On	Off

(n = 7, 6, 4, 3)

*: Don't care

8.3 Port 3

8.3.1 Overview

Port 3 is an 8-bit I/O port, configured as shown in figure 8.2.

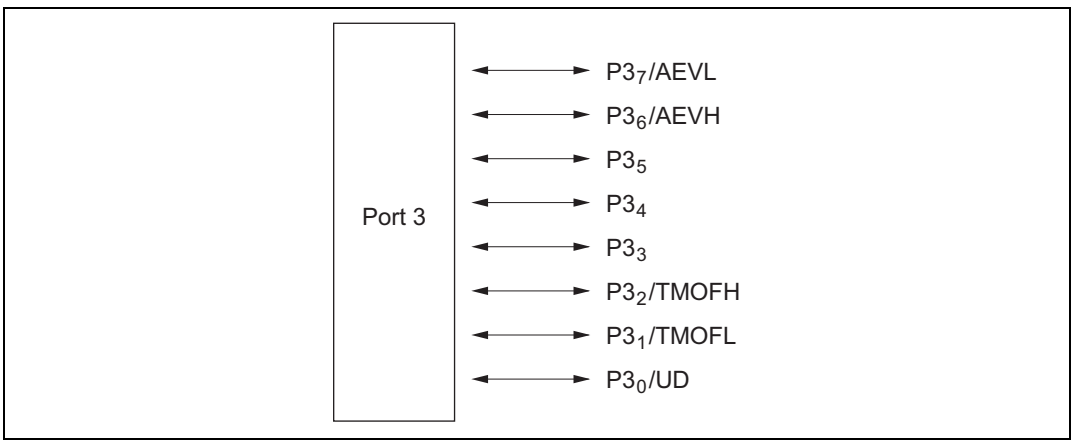

Figure 8.2 Port 3 Pin Configuration

8.3.2 Register Configuration and Description

Table 8.5 shows the port 3 register configuration.

Table 8.5 Port 3 Registers

Name	Abbr.	R/W	Initial Value	Address
Port data register 3	PDR3	R/W	H'00	H'FFD6
Port control register 3	PCR3	W	H'00	H'FFE6
Port pull-up control register 3	PUCR3	R/W	H'00	H'FFE1
Port mode register 2	PMR2	R/W	H'D8	H'FFC9
Port mode register 3	PMR3	R/W	—	H'FFCA

Port Data Register 3 (PDR3)

Bit	7	6	5	4	3	2	1	0
	$P3_7$	$P3_6$	$P3_5$	$P3_4$	$P3_3$	$P3_2$	$P3_1$	$P3_0$
Initial value	0	0	0	0	0	0	0	0
Read/Write	R/W	R/W	R/W	R/W	R/W	R/W	R/W	R/W

PDR3 is an 8-bit register that stores data for port 3 pins $P3_7$ to $P3_0$. If port 3 is read while PCR3 bits are set to 1, the values stored in PDR3 are read, regardless of the actual pin states. If port 3 is read while PCR3 bits are cleared to 0, the pin states are read.

Upon reset, PDR3 is initialized to H'00.

Port Control Register 3 (PCR3)

Bit	7	6	5	4	3	2	1	0
	$PCR3_7$	$PCR3_6$	$PCR3_5$	$PCR3_4$	$PCR3_3$	$PCR3_2$	$PCR3_1$	$PCR3_0$
Initial value	0	0	0	0	0	0	0	0
Read/Write	W	W	W	W	W	W	W	W

PCR3 is an 8-bit register for controlling whether each of the port 3 pins $P3_7$ to $P3_0$ functions as an input pin or output pin. Setting a PCR3 bit to 1 makes the corresponding pin an output pin, while clearing the bit to 0 makes the pin an input pin. The settings in PCR3 and in PDR3 are valid only when the corresponding pin is designated in PMR3 as a general I/O pin.

Upon reset, PCR3 is initialized to H'00.

PCR3 is a write-only register, which is always read as all 1s.

Port Pull-Up Control Register 3 (PUCR3)

Bit	7	6	5	4	3	2	1	0
	$PUCR3_7$	$PUCR3_6$	$PUCR3_5$	$PUCR3_4$	$PUCR3_3$	$PUCR3_2$	$PUCR3_1$	$PUCR3_0$
Initial value	0	0	0	0	0	0	0	0
Read/Write	R/W	R/W	R/W	R/W	R/W	R/W	R/W	R/W

PUCR3 controls whether the MOS pull-up of each of the port 3 pins $P3_7$ to $P3_0$ is on or off. When a PCR3 bit is cleared to 0, setting the corresponding PUCR3 bit to 1 turns on the MOS pull-up for the corresponding pin, while clearing the bit to 0 turns off the MOS pull-up.

Upon reset, PUCR3 is initialized to H'00.

Port Mode Register 2 (PMR2)

Bit	7	6	5	4	3	2	1	0
	—	—	POF1	—	—	WDCKS	NCS	IRQ0
Initial value	1	1	0	1	1	0	0	0
Read/Write	—	—	R/W	—	—	R/W	R/W	R/W

PMR2 is an 8-bit read/write register. It controls whether the PMOS transistor internal to $P3_5$ is on or off, the selection of the watchdog timer clock, the selection of TMIG noise cancellation, and switching of the $P4_3/\overline{IRQ_0}$ pin functions.

Upon reset, PMR2 is initialized to H'D8.

This section only deals with the bit that controls whether the PMOS transistor internal to pin $P3_5$ is on or off. For the functions of the other bits, see the descriptions of port 1 (WDCKS and NCS) and port 4 (IRQ0).

Bit 5—Pin $P3_5$ PMOS Transistor Control (POF1)

This bit selects whether the PMOS transistor of the output buffer for pin $P3_5$ is on or off.

Bit 5 POF1	Description	
0	CMOS output	(initial value)
1	NMOS open-drain output	

Note: The pin is an NMOS open-drain output when this bit is set to 1 and $P3_5$ is an output.

Port Mode Register 3 (PMR3)

Bit	7	6	5	4	3	2	1	0
	AEVL	AEVH	—	—	—	TMOFH	TMOFL	UD
Initial value	0	0	—	—	—	0	0	0
Read/Write	R/W	R/W	W	W	W	R/W	R/W	R/W

PMR3 is an 8-bit read/write register, controlling the selection of pin functions for port 3 pins.

Bit 7—$P3_7$/AEVL Pin Function Switch (AEVL)

This bit selects whether pin $P3_7$/AEVL is used as $P3_7$ or as AEVL.

Bit 7 AEVL	Description	
0	Functions as $P3_7$ I/O pin	(initial value)
1	Functions as AEVL input pin	

Bit 6—$P3_6$/AEVH Pin Function Switch (AEVH)

This bit selects whether pin $P3_6$/AEVH is used as $P3_6$ or as AEVH.

Bit 6 AEVH	Description	
0	Functions as $P3_6$ I/O pin	(initial value)
1	Functions as AEVH input pin	

Bits 5 to 3—Reserved

These bits are reserved; they can only be written with 0.

Bit 2—$P3_2$/TMOFH Pin Function Switch (TMOFH)

This bit selects whether pin $P3_2$/TMOFH is used as $P3_2$ or as TMOFH.

Bit 2 TMOFH	Description	
0	Functions as $P3_2$ I/O pin	(initial value)
1	Functions as TMOFH output pin	

Bit 1—$P3_1$/TMOFL Pin Function Switch (TMOFL)

This bit selects whether pin $P3_1$/TMOFL is used as $P3_1$ or as TMOFL.

Bit 1 TMOFL	Description	
0	Functions as $P3_1$ I/O pin	(initial value)
1	Functions as TMOFL output pin	

Bit 0—$P3_0$/UD Pin Function Switch (UD)

This bit selects whether pin $P3_0$/UD is used as $P3_0$ or as UD.

Bit 0 UD	Description	
0	Functions as $P3_0$ I/O pin	(initial value)
1	Functions as UD input pin	

8.3.3 Pin Functions

Table 8.6 shows the port 3 pin functions.

Table 8.6 Port 3 Pin Functions

Pin	Pin Functions and Selection Method
$P3_7$/AEVL	The pin function depends on bit AEVL in PMR3 and bit $PCR3_7$ in PCR3.

AEVL	0		1
$PCR3_7$	0	1	*
Pin function	$P3_7$ input pin	$P3_7$ output pin	AEVL input pin

$P3_6$/AEVH — The pin function depends on bit AEVH in PMR3 and bit $PCR3_6$ in PCR3.

AEVH	0		1
$PCR3_6$	0	1	*
Pin function	$P3_6$ input pin	$P3_6$ output pin	AEVH input pin

$P3_5$ to $P3_3$ — The pin function depends on the corresponding bit in PCR3.

PCR3n	0	1
Pin function	$P3_n$ input pin	$P3_n$ output pin

(n = 5 to 3)

$P3_2$/TMOFH — The pin function depends on bit TMOFH in PMR3 and bit $PCR3_2$ in PCR3.

TMOFH	0		1
$PCR3_2$	0	1	*
Pin function	$P3_2$ input pin	$P3_2$ output pin	TMOFH output pin

$P3_1$/TMOFL — The pin function depends on bit TMOFL in PMR3 and bit $PCR3_1$ in PCR3.

TMOFL	0		1
$PCR3_1$	0	1	*
Pin function	$P3_1$ input pin	$P3_1$ output pin	THOFL output pin

$P3_0$/UD — The pin function depends on bit UD in PMR3 and bit PCR30 in PCR3.

UD	0		1
$PCR3_0$	0	1	*
Pin function	$P3_0$ input pin	$P3_0$ output pin	UD input pin

*: Don’t care

8.3.4 Pin States

Table 8.7 shows the port 3 pin states in each operating mode.

Table 8.7 Port 3 Pin States

Pins	Reset	Sleep	Subsleep	Standby	Watch	Subactive	Active
$P3_7$/AEVL $P3_6$/AEVH $P3_5$ $P3_4$ $P3_3$ $P3_2$/TMOFH $P3_1$/TMOFL $P3_0$/UD	High-impedance	Retains previous state	Retains previous state	High-impedance*	Retains previous state	Functional	Functional

Note: * A high-level signal is output when the MOS pull-up is in the on state.

8.3.5 MOS Input Pull-Up

Port 3 has a built-in MOS input pull-up function that can be controlled by software. When a PCR3 bit is cleared to 0, setting the corresponding PUCR3 bit to 1 turns on the MOS pull-up for that pin. The MOS pull-up function is in the off state after a reset.

$PCR3_n$	0	0	1
$PUCR3_n$	0	1	*
MOS input pull-up	Off	On	Off

(n = 7 to 0)

*: Don't care

8.4 Port 4

8.4.1 Overview

Port 4 is a 3-bit I/O port and 1-bit input port, configured as shown in figure 8.3.

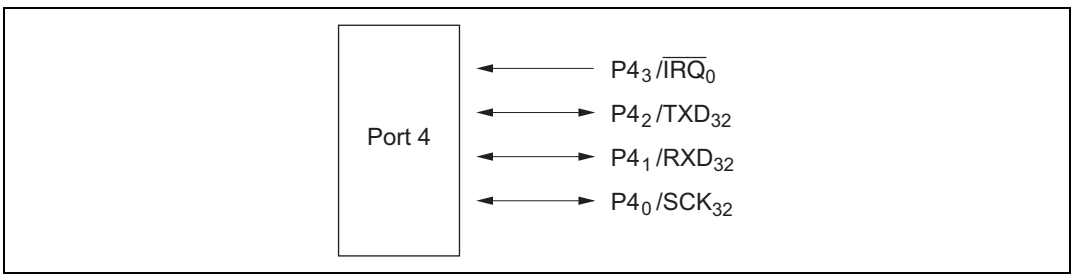

Figure 8.3 Port 4 Pin Configuration

8.4.2 Register Configuration and Description

Table 8.8 shows the port 4 register configuration.

Table 8.8 Port 4 Registers

Name	Abbr.	R/W	Initial Value	Address
Port data register 4	PDR4	R/W	H'F8	H'FFD7
Port control register 4	PCR4	W	H'F8	H'FFE7
Port mode register 2	PMR2	R/W	H'D8	H'FFC9

Port Data Register 4 (PDR4)

Bit	7	6	5	4	3	2	1	0
	—	—	—	—	$P4_3$	$P4_2$	$P4_1$	$P4_0$
Initial value	1	1	1	1	1	0	0	0
Read/Write	—	—	—	—	R	R/W	R/W	R/W

PDR4 is an 8-bit register that stores data for port 4 pins $P4_2$ to $P4_0$. If port 4 is read while PCR4 bits are set to 1, the values stored in PDR4 are read, regardless of the actual pin states. If port 4 is read while PCR4 bits are cleared to 0, the pin states are read.

Upon reset, PDR4 is initialized to H'F8.

Port Control Register 4 (PCR4)

Bit	7	6	5	4	3	2	1	0
	—	—	—	—	—	$PCR4_2$	$PCR4_1$	$PCR4_0$
Initial value	1	1	1	1	1	0	0	0
Read/Write	—	—	—	—	—	W	W	W

PCR4 is an 8-bit register for controlling whether each of port 4 pins $P4_2$ to $P4_0$ functions as an input pin or output pin. Setting a PCR4 bit to 1 makes the corresponding pin an output pin, while clearing the bit to 0 makes the pin an input pin. PCR4 and PDR4 settings are valid when the corresponding pins are designated for general-purpose input/output by SCR3.

Upon reset, PCR4 is initialized to H'F8.

PCR4 is a write-only register, which is always read as all 1s.

Port Mode Register 2 (PMR2)

Bit	7	6	5	4	3	2	1	0
	—	—	POF1	—	—	WDCKS	NCS	IRQ_0
Initial value	1	1	0	1	1	0	0	0
Read/Write	—	—	R/W	—	—	R/W	R/W	R/W

PMR2 is an 8-bit read/write register. It controls whether the PMOS transistor internal to $P3_5$ is on or off, the selection of the watchdog timer clock, the selection of TMIG noise cancellation, and switching of the $P4_3/\overline{IRQ_0}$ pin functions.

Upon reset, PMR2 is initialized to H'D8.

This section only deals with the bit that controls switching of the $P4_3/\overline{IRQ_0}$ pin functions. For the functions of the other bits, see the descriptions of port 1 (WDCKS and NCS) and port 3 (POF1).

Bit 0—$P4_3/\overline{IRQ_0}$ Pin Function Switch (IRQ_0)

This bit selects whether pin $P4_3/\overline{IRQ_0}$ is used as $P4_3$ or as $\overline{IRQ_0}$.

Bit 0 IRQ_0	Description	
0	Functions as $P4_3$ input pin	(initial value)
1	Functions as $\overline{IRQ_0}$ input pin	

8.4.3 Pin Functions

Table 8.9 shows the port 4 pin functions.

Table 8.9 Port 4 Pin Functions

Pin	Pin Functions and Selection Method
$P4_3/\overline{IRQ_0}$	The pin function depends on bit IRQ0 in PMR2.

IRQ0	0	1
Pin function	$P4_3$ input pin	$\overline{IRQ_0}$ input pin

$P4_2/TXD_{32}$ — The pin function depends on bit TE in SCR3, bit SPC32 in SPCR, and bit $PCR4_2$ in PCR4.

SPC32	0		1
TE	0		1
$PCR4_2$	0	1	*
Pin function	$P4_2$ input pin	$P4_2$ output pin	TXD_{32} output pin

$P4_1/RXD_{32}$ — The pin function depends on bit RE in SCR3 and bit $PCR4_1$ in PCR4.

RE	0		1
$PCR4_1$	0	1	*
Pin function	$P4_1$ input pin	$P4_1$ output pin	RXD_{32} input pin

$P4_0/SCK_{32}$ — The pin function depends on bit CKE1 and CKE0 in SCR3, bit COM in SMR3, and bit $PCR4_0$ in PCR4.

CKE1	0				1
CKE0	0			1	*
COM	0		1	*	*
$PCR4_0$	0	1	*		*
Pin function	$P4_0$ input pin	$P4_0$ output pin	SCK_{32} output pin		SCK_{32} input pin

*: Don't care

8.4.4 Pin States

Table 8.10 shows the port 4 pin states in each operating mode.

Table 8.10 Port 4 Pin States

Pins	Reset	Sleep	Subsleep	Standby	Watch	Subactive	Active
$P4_3/\overline{IRQ}_0$ $P4_2/TXD_{32}$ $P4_1/RXD_{32}$ $P4_0/SCK_{32}$	High-impedance	Retains previous state	Retains previous state	High-impedance	Retains previous state	Functional	Functional

8.5 Port 5

8.5.1 Overview

Port 5 is an 8-bit I/O port, configured as shown in figure 8.4.

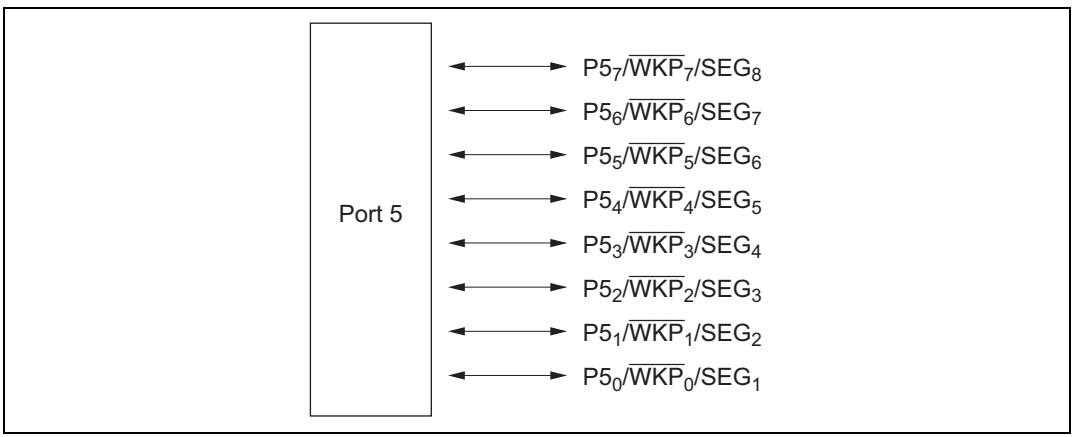

Figure 8.4 Port 5 Pin Configuration

8.5.2 Register Configuration and Description

Table 8.11 shows the port 5 register configuration.

Table 8.11 Port 5 Registers

Name	Abbr.	R/W	Initial Value	Address
Port data register 5	PDR5	R/W	H'00	H'FFD8
Port control register 5	PCR5	W	H'00	H'FFE8
Port pull-up control register 5	PUCR5	R/W	H'00	H'FFE2
Port mode register 5	PMR5	R/W	H'00	H'FFCC

Port Data Register 5 (PDR5)

Bit	7	6	5	4	3	2	1	0
	$P5_7$	$P5_6$	$P5_5$	$P5_4$	$P5_3$	$P5_2$	$P5_1$	$P5_0$
Initial value	0	0	0	0	0	0	0	0
Read/Write	R/W	R/W	R/W	R/W	R/W	R/W	R/W	R/W

PDR5 is an 8-bit register that stores data for port 5 pins $P5_7$ to $P5_0$. If port 5 is read while PCR5 bits are set to 1, the values stored in PDR5 are read, regardless of the actual pin states. If port 5 is read while PCR5 bits are cleared to 0, the pin states are read.

Upon reset, PDR5 is initialized to H'00.

Port Control Register 5 (PCR5)

Bit	7	6	5	4	3	2	1	0
	$PCR5_7$	$PCR5_6$	$PCR5_5$	$PCR5_4$	$PCR5_3$	$PCR5_2$	$PCR5_1$	$PCR5_0$
Initial value	0	0	0	0	0	0	0	0
Read/Write	W	W	W	W	W	W	W	W

PCR5 is an 8-bit register for controlling whether each of the port 5 pins $P5_7$ to $P5_0$ functions as an input pin or output pin. Setting a PCR5 bit to 1 makes the corresponding pin an output pin, while clearing the bit to 0 makes the pin an input pin. PCR5 and PDR5 settings are valid when the corresponding pins are designated for general-purpose input/output by PMR5 and bits SGS3 to SGS0 in LPCR.

Upon reset, PCR5 is initialized to H'00.

PCR5 is a write-only register, which is always read as all 1s.

Port Pull-Up Control Register 5 (PUCR5)

Bit	7	6	5	4	3	2	1	0
	$PUCR5_7$	$PUCR5_6$	$PUCR5_5$	$PUCR5_4$	$PUCR5_3$	$PUCR5_2$	$PUCR5_1$	$PUCR5_0$
Initial value	0	0	0	0	0	0	0	0
Read/Write	R/W	R/W	R/W	R/W	R/W	R/W	R/W	R/W

PUCR5 controls whether the MOS pull-up of each of port 5 pins $P5_7$ to $P5_0$ is on or off. When a PCR5 bit is cleared to 0, setting the corresponding PUCR5 bit to 1 turns on the MOS pull-up for the corresponding pin, while clearing the bit to 0 turns off the MOS pull-up.

Upon reset, PUCR5 is initialized to H'00.

Port Mode Register 5 (PMR5)

Bit	7	6	5	4	3	2	1	0
	WKP_7	WKP_6	WKP_5	WKP_4	WKP_3	WKP_2	WKP_1	WKP_0
Initial value	0	0	0	0	0	0	0	0
Read/Write	R/W	R/W	R/W	R/W	R/W	R/W	R/W	R/W

PMR5 is an 8-bit read/write register, controlling the selection of pin functions for port 5 pins.

Upon reset, PMR5 is initialized to H'00.

Bit n—$P5_n/\overline{WKP}_n/SEG_{n+1}$ Pin Function Switch (WKPn)

When pin $P5n/\overline{WKP}n/SEGn+1$ is not used as SEG_{n+1}, these bits select whether the pin is used as P5n or $\overline{WKP}_n$.

Bit n WKPn	Description	
0	Functions as P5n I/O pin	(initial value)
1	Functions as $\overline{WKP}_n$ input pin	

(n = 7 to 0)

Note: For use as SEG_{n+1}, see section 13.2.1, LCD Port Control Register (LPCR).

8.5.3 Pin Functions

Table 8.12 shows the port 5 pin functions.

Table 8.12 Port 5 Pin Functions

Pin	Pin Functions and Selection Method
$P5_7/\overline{WKP_7}/SEG_8$ to $P5_0/\overline{WKP_0}/SEG_1$	The pin function depends on bits WKP_7 to WKP_0 in PMR5, bits $PCR5_7$ to $PCR5_0$ in PCR5, and bits SGS3 to SGS0 in LPCR.

$P5_7$ to $P5_4$ (n = 7 to 4)

SGS3 to SGS0	Other than 0010, 0011, 0100, 0101, 0110, 0111, 1000, 1001			0010, 0011, 0100, 0101, 0110, 0111, 1000, 1001
WKP_n	0		1	*
$PCR5_n$	0	1	*	*
Pin function	$P5_n$ input pin	$P5_n$ output pin	$\overline{WKPn}$ input pin	SEGn+1 output pin

$P5_3$ to $P5_0$ (m= 3 to 0)

SGS3 to SGS0	Other than 0001, 0010, 0011, 0100, 0101, 0110, 0111, 1000			0001, 0010, 0011, 0100, 0101, 0110, 0111, 1000
WKP_m	0		1	*
$PCR5_m$	0	1	*	*
Pin function	$P5_m$ input pin	$P5_m$ output pin	$\overline{WKPm}$ output pin	SEGm+1 output pin

*: Don’t care

8.5.4 Pin States

Table 8.13 shows the port 5 pin states in each operating mode.

Table 8.13 Port 5 Pin States

Pins	Reset	Sleep	Subsleep	Standby	Watch	Subactive	Active
$P5_7/\overline{WKP}_7/SEG_8$ to $P5_0/\overline{WKP}_0/SEG_1$	High-impedance	Retains previous state	Retains previous state	High-impedance*	Retains previous state	Functional	Functional

Note: * A high-level signal is output when the MOS pull-up is in the on state.
In the HD64F38024 the previous pin state is retained.

8.5.5 MOS Input Pull-Up

Port 5 has a built-in MOS input pull-up function that can be controlled by software. When a PCR5 bit is cleared to 0, setting the corresponding PUCR5 bit to 1 turns on the MOS pull-up for that pin. The MOS pull-up function is in the off state after a reset.

$PCR5_n$	0	0	1
$PUCR5_n$	0	1	*
MOS input pull-up	Off	On	Off

(n = 7 to 0)

*: Don't care

8.6 Port 6

8.6.1 Overview

Port 6 is an 8-bit I/O port. The port 6 pin configuration is shown in figure 8.5.

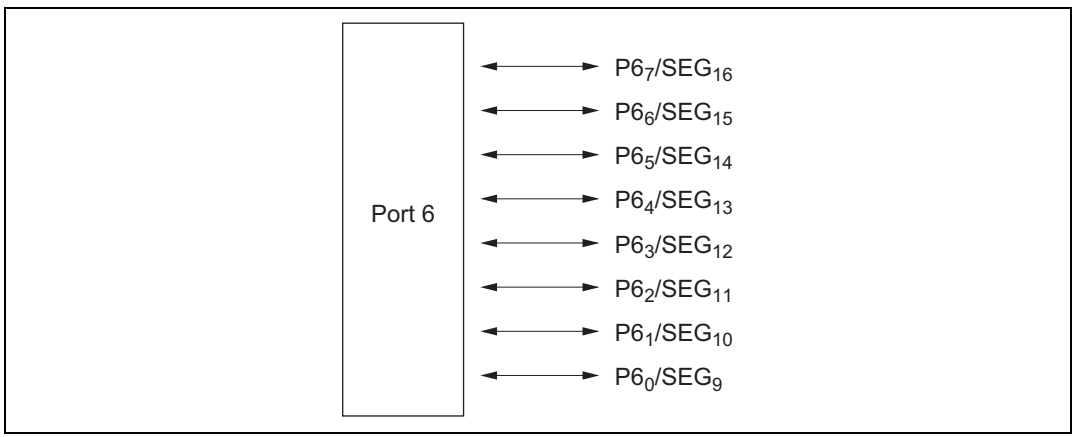

Figure 8.5 Port 6 Pin Configuration

8.6.2 Register Configuration and Description

Table 8.14 shows the port 6 register configuration.

Table 8.14 Port 6 Registers

Name	Abbr.	R/W	Initial Value	Address
Port data register 6	PDR6	R/W	H'00	H'FFD9
Port control register 6	PCR6	W	H'00	H'FFE9
Port pull-up control register 6	PUCR6	R/W	H'00	H'FFE3

Port Data Register 6 (PDR6)

Bit	7	6	5	4	3	2	1	0
	$P6_7$	$P6_6$	$P6_5$	$P6_4$	$P6_3$	$P6_2$	$P6_1$	$P6_0$
Initial value	0	0	0	0	0	0	0	0
Read/Write	R/W	R/W	R/W	R/W	R/W	R/W	R/W	R/W

PDR6 is an 8-bit register that stores data for port 6 pins $P6_7$ to $P6_0$.

If port 6 is read while PCR6 bits are set to 1, the values stored in PDR6 are read, regardless of the actual pin states. If port 6 is read while PCR6 bits are cleared to 0, the pin states are read.

Upon reset, PDR6 is initialized to H'00.

Port Control Register 6 (PCR6)

Bit	7	6	5	4	3	2	1	0
	$PCR6_7$	$PCR6_6$	$PCR6_5$	$PCR6_4$	$PCR6_3$	$PCR6_2$	$PCR6_1$	$PCR6_0$
Initial value	0	0	0	0	0	0	0	0
Read/Write	W	W	W	W	W	W	W	W

PCR6 is an 8-bit register for controlling whether each of the port 6 pins $P6_7$ to $P6_0$ functions as an input pin or output pin.

Setting a PCR6 bit to 1 makes the corresponding pin ($P6_7$ to $P6_0$) an output pin, while clearing the bit to 0 makes the pin an input pin. PCR6 and PDR6 settings are valid when the corresponding pins are designated for general-purpose input/output by bits SGS3 to SGS0 in LPCR.

Upon reset, PCR6 is initialized to H'00.

PCR6 is a write-only register, which is always read as all 1s.

Port Pull-Up Control Register 6 (PUCR6)

Bit	7	6	5	4	3	2	1	0
	$PUCR6_7$	$PUCR6_6$	$PUCR6_5$	$PUCR6_4$	$PUCR6_3$	$PUCR6_2$	$PUCR6_1$	$PUCR6_0$
Initial value	0	0	0	0	0	0	0	0
Read/Write	R/W	R/W	R/W	R/W	R/W	R/W	R/W	R/W

PUCR6 controls whether the MOS pull-up of each of the port 6 pins $P6_7$ to $P6_0$ is on or off. When a PCR6 bit is cleared to 0, setting the corresponding PUCR6 bit to 1 turns on the MOS pull-up for the corresponding pin, while clearing the bit to 0 turns off the MOS pull-up.

Upon reset, PUCR6 is initialized to H'00.

8.6.3 Pin Functions

Table 8.15 shows the port 6 pin functions.

Table 8.15 Port 6 Pin Functions

Pin	Pin Functions and Selection Method
$P6_7/SEG_{16}$ to $P6_0/SEG_9$	The pin function depends on bits $PCR6_7$ to $PCR6_0$ in PCR6 and bits SGS3 to SGS0 in LPCR.

$P6_7$ to $P6_4$ (n = 7 to 4)

SGS3 to SGS0	Other than 0100, 0101, 0110, 0111, 1000, 1001, 1010, 1011		0100, 0101, 0110, 0111, 1000, 1001, 1010, 1011
$PCR6_n$	0	1	*
Pin function	$P6_n$ input pin	$P6_n$ output pin	SEG_{n+9} output pin

$P6_3$ to $P6_0$ (m = 3 to 0)

SGS3 to SGS0	Other than 0011, 0100, 0101, 0110, 0111, 1000, 1001, 1010		0011, 0100, 0101, 0110, 0111, 1000, 1001, 1010
$PCR6_m$	0	1	*
Pin function	$P6_m$ input pin	$P6_m$ output pin	SEG_{m+9} output pin

*: Don't care

8.6.4 Pin States

Table 8.16 shows the port 6 pin states in each operating mode.

Table 8.16 Port 6 Pin States

Pin	Reset	Sleep	Subsleep	Standby	Watch	Subactive	Active
$P6_7/SEG_{16}$ to $P6_0/SEG_9$	High-impedance	Retains previous state	Retains previous state	High-impedance*	Retains previous state	Functional	Functional

Note: * A high-level signal is output when the MOS pull-up is in the on state.

8.6.5 MOS Input Pull-Up

Port 6 has a built-in MOS pull-up function that can be controlled by software. When a PCR6 bit is cleared to 0, setting the corresponding PUCR6 bit to 1 turns on the MOS pull-up for that pin. The MOS pull-up function is in the off state after a reset.

$PCR6_n$	0	0	1
$PUCR6_n$	0	1	*
MOS input pull-up	Off	On	Off

(n = 7 to 0)

*: Don't care

8.7 Port 7

8.7.1 Overview

Port 7 is an 8-bit I/O port, configured as shown in figure 8.6.

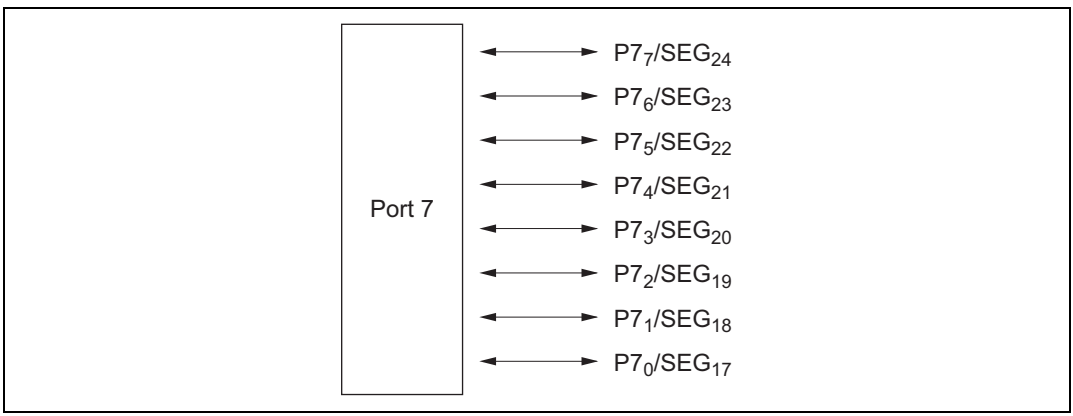

Figure 8.6 Port 7 Pin Configuration

8.7.2 Register Configuration and Description

Table 8.17 shows the port 7 register configuration.

Table 8.17 Port 7 Registers

Name	Abbr.	R/W	Initial Value	Address
Port data register 7	PDR7	R/W	H'00	H'FFDA
Port control register 7	PCR7	W	H'00	H'FFEA

Port Data Register 7 (PDR7)

Bit	7	6	5	4	3	2	1	0
	$P7_7$	$P7_6$	$P7_5$	$P7_4$	$P7_3$	$P7_2$	$P7_1$	$P7_0$
Initial value	0	0	0	0	0	0	0	0
Read/Write	R/W	R/W	R/W	R/W	R/W	R/W	R/W	R/W

PDR7 is an 8-bit register that stores data for port 7 pins $P7_7$ to $P7_0$. If port 7 is read while PCR7 bits are set to 1, the values stored in PDR7 are read, regardless of the actual pin states. If port 7 is read while PCR7 bits are cleared to 0, the pin states are read.

Upon reset, PDR7 is initialized to H'00.

Port Control Register 7 (PCR7)

Bit	7	6	5	4	3	2	1	0
	$PCR7_7$	$PCR7_6$	$PCR7_5$	$PCR7_4$	$PCR7_3$	$PCR7_2$	$PCR7_1$	$PCR7_0$
Initial value	0	0	0	0	0	0	0	0
Read/Write	W	W	W	W	W	W	W	W

PCR7 is an 8-bit register for controlling whether each of the port 7 pins $P7_7$ to $P7_0$ functions as an input pin or output pin. Setting a PCR7 bit to 1 makes the corresponding pin an output pin, while clearing the bit to 0 makes the pin an input pin. PCR7 and PDR7 settings are valid when the corresponding pins are designated for general-purpose input/output by bits SGS3 to SGS0 in LPCR.

Upon reset, PCR7 is initialized to H'00.

PCR7 is a write-only register, which is always read as all 1s.

8.7.3 Pin Functions

Table 8.18 shows the port 7 pin functions.

Table 8.18 Port 7 Pin Functions

Pin	Pin Functions and Selection Method
$P7_7/SEG_{24}$ to $P7_0/SEG_{17}$	The pin function depends on bits $PCR7_7$ to $PCR7_0$ in PCR7 and bits SGS3 to SGS0 in LPCR.

$P7_7$ to $P7_4$ (n = 7 to 4)

SGS3 to SGS0	Other than 0110, 0111, 1000, 1001, 1010, 1011, 1100, 1101		0110, 0111, 1000, 1001, 1010, 1011, 1100, 1101
$PCR7_n$	0	1	*
Pin function	$P7_n$ input pin	$P7_n$ output pin	SEG_{n+17} output pin

$P7_3$ to $P7_0$ (m = 3 to 0)

SGS3 to SGS0	Other than 0101, 0110, 0111, 1000, 1001, 1010, 1011, 1100		0101, 0110, 0111, 1000, 1001, 1010, 1011, 1100
$PCR7_m$	0	1	*
Pin function	$P7_m$ input pin	$P7_m$ output pin	SEG_{m+17} output pin

*: Don't care

8.7.4 Pin States

Table 8.19 shows the port 7 pin states in each operating mode.

Table 8.19 Port 7 Pin States

Pins	Reset	Sleep	Subsleep	Standby	Watch	Subactive	Active
$P7_7/SEG_{24}$ to $P7_0/SEG_{17}$	High-impedance	Retains previous state	Retains previous state	High-impedance	Retains previous state	Functional	Functional

8.8 Port 8

8.8.1 Overview

Port 8 is an 8-bit I/O port configured as shown in figure 8.7.

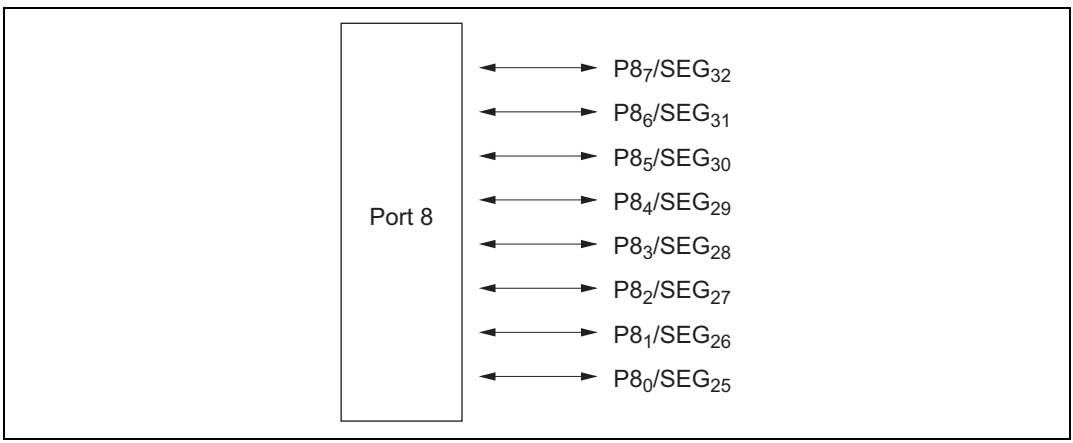

Figure 8.7 Port 8 Pin Configuration

8.8.2 Register Configuration and Description

Table 8.20 shows the port 8 register configuration.

Table 8.20 Port 8 Registers

Name	Abbr.	R/W	Initial Value	Address
Port data register 8	PDR8	R/W	H'00	H'FFDB
Port control register 8	PCR8	W	H'00	H'FFEB

Port Data Register 8 (PDR8)

Bit	7	6	5	4	3	2	1	0
	$P8_7$	$P8_6$	$P8_5$	$P8_4$	$P8_3$	$P8_2$	$P8_1$	$P8_0$
Initial value	0	0	0	0	0	0	0	0
Read/Write	R/W	R/W	R/W	R/W	R/W	R/W	R/W	R/W

PDR8 is an 8-bit register that stores data for port 8 pins $P8_7$ to $P8_0$. If port 8 is read while PCR8 bits are set to 1, the values stored in PDR8 are read, regardless of the actual pin states. If port 8 is read while PCR8 bits are cleared to 0, the pin states are read.

Upon reset, PDR8 is initialized to H'00.

Port Control Register 8 (PCR8)

Bit	7	6	5	4	3	2	1	0
	$PCR8_7$	$PCR8_6$	$PCR8_5$	$PCR8_4$	$PCR8_3$	$PCR8_2$	$PCR8_1$	$PCR8_0$
Initial value	0	0	0	0	0	0	0	0
Read/Write	W	W	W	W	W	W	W	W

PCR8 is an 8-bit register for controlling whether the port 8 pins $P8_7$ to $P8_0$ functions as an input or output pin. Setting a PCR8 bit to 1 makes the corresponding pin an output pin, while clearing the bit to 0 makes the pin an input pin. PCR8 and PDR8 settings are valid when the corresponding pins are designated for general-purpose input/output by bits SGS3 to SGS0 in LPCR.

Upon reset, PCR8 is initialized to H'00.

PCR8 is a write-only register, which is always read as all 1s.

8.8.3 Pin Functions

Table 8.21 shows the port 8 pin functions.

Table 8.21 Port 8 Pin Functions

Pin	Pin Functions and Selection Method
$P8_7$/SEG_{32} to $P8_0$/SEG_{25}	The pin function depends on bits $PCR8_7$ to $PCR8_0$ in PCR8 and bits SGS3 to SGS0 in LPCR.

$P8_7$ to $P8_4$ (n = 7 to 4)

SGS3 to SGS0	Other than 1000, 1001, 1010, 1011, 1100, 1101, 1110, 1111		1000, 1001, 1010, 1011, 1100, 1101, 1110, 1111
$PCR8_n$	0	1	*
Pin function	$P8_n$ input pin	$P8_n$ output pin	SEG_{n+25} output pin

$P8_3$ to $P8_0$ (m = 3 to 0)

SGS3 to SGS0	Other than 0111, 1000, 1001, 1010, 1011, 1100, 1101, 1110		0111, 1000, 1001, 1010, 1011, 1100, 1101, 1110
$PCR8_m$	0	1	*
Pin function	$P8_m$ input pin	$P8_m$ output pin	SEG_{m+25} output pin

*: Don't care

8.8.4 Pin States

Table 8.22 shows the port 8 pin states in each operating mode.

Table 8.22 Port 8 Pin States

Pins	Reset	Sleep	Subsleep	Standby	Watch	Subactive	Active
$P8_7$/SEG_{32} to $P8_0$/SEG_{25}	High-impedance	Retains previous state	Retains previous state	High-impedance	Retains previous state	Functional	Functional

8.9 Port 9

8.9.1 Overview

Port 9 is a 6-bit output port, configured as shown in figure 8.8.

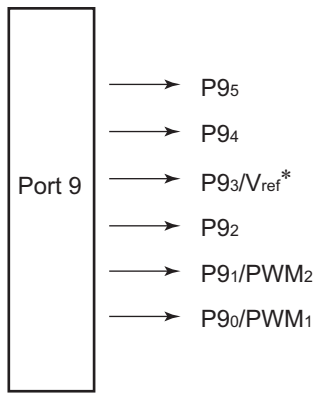

Note: * The V_{ref} pin is implemented on the H8/38124 Group only.

Figure 8.8 Port 9 Pin Configuration

8.9.2 Register Configuration and Description

Table 8.23 shows the port 9 register configuration.

Table 8.23 Port 9 Registers

Name	Abbr.	R/W	Initial Value	Address
Port data register 9	PDR9	R/W	H'FF	H'FFDC
Port mode register 9	PMR9	R/W	—	H'FFEC

Port Data Register 9 (PDR9)

Bit	7	6	5	4	3	2	1	0
	—	—	$P9_5$	$P9_4$	$P9_3$	$P9_2$	$P9_1$	$P9_0$
Initial value	1	1	1	1	1	1	1	1
Read/Write	—	—	R/W	R/W	R/W	R/W	R/W	R/W

PDR9 is an 8-bit register that stores data for port 9 pins $P9_5$ to $P9_0$.

Upon reset, PDR9 is initialized to H'FF.

Port Mode Register 9 (PMR9)

Bit	7	6	5	4	3	2	1	0
	—	—	—	—	PIOFF/—*	—	PWM_2	PWM_1
Initial value	1	1	1	1	0	—	0	0
Read/Write	—	—	—	—	R/W	W	R/W	R/W

Note: * Readable/writable reserved bit in the H8/38024S Group and H8/38124 Group.

PMR9 is an 8-bit read/write register controlling the selection of the $P9_0$ and $P9_1$ pin functions.

Bit 3— $P9_2$ to $P9_0$ Step-Up Circuit Control (PIOFF)

Bit 3 turns the $P9_2$ to $P9_0$ step-up circuit on and off. This bit is reserved in the H8/38024S Group and H8/38124 Group.

Bit 3 PIOFF	Description	
0	Large-current port step-up circuit is turned on	(initial value)
1	Large-current port step-up circuit is turned off	

Note: In the H8/38024 ZTAT version and mask ROM version, and the HD64F38024R, the following precautions should be followed when accessing the PIOFF bit.

When turning the voltage boost circuit on or off, always write to the register when the buffer NMOS is off (port data set to 1). Also, when turning on the voltage boost circuit, first clear PIOFF to 0 and then after waiting 30 system clock cycles turn on the buffer NMOS (port data cleared to 0). If 30 system clock cycles have not elapsed the voltage boost circuit will not start operating and it will not be possible to produce a large current flow, resulting in unstable operation.

In the HD64F38024, the following precautions should be followed when accessing the PIOFF bit.

In the HD64F38024, if port data bits are cleared from 1 to 0 while the PIOFF bit is set to 1, repeated charge-discharge cycles will occur in the voltage boost circuit, causing the current consumption to rise and fall cyclically. The amount of rise in the current consumption in this case is between several tens of µA and 100 µA above the normal level. Therefore, the following points should be kept in mind.

(1) Not Using Subclock

Regardless of whether or not port 9 is used, the PIOFF bit should be left at its initial value (0) and not changed.

(2) Not Using Port 9

Port data should be used unchanged with the PIOFF bit either at its initial value (0) or set to 1. In the latter case the current consumption will vary, due to the intermittent operation of the voltage boost circuit, by about 1 µA (standby mode or watch mode, V_{CC} = 3.0 V, Ta = 25°C).

(3) Using Port 9 with PIOFF Always Cleared to 0

This case applies to instances in which the voltage boost circuit is used constantly to generate a large current glow, or an increase in current consumption due to the operation of the voltage boost circuit is permissible even in the standby mode or watch mode (see (2) above). In this case the PIOFF bit should be left at its initial value (0) and not changed.

(4) Using Port 9 with PIOFF Set to 1

This case applies to instances in which it is necessary to change the value of the PIOFF bit due to operating conditions or where it is desirable to keep the PIOFF bit set to 1 because no large current is required (for example, shutting down the voltage boost circuit to reduce current consumption in the watch mode). In this case, clear port data

from 1 to 0 only when the PIOFF bit is cleared to 0. Also, if a large current flow is required, the PIOFF bit should be set to 1 and all the port data bits set to 1. Then clear PIOFF to 0 and, after allowing 30 clock cycles to permit stabilization of the voltage boost circuit, clear the port data bits to 0. If time is not provided to allow the voltage boost circuit to stabilize, it will not be possible to produce a large current flow. There are no such restrictions when setting port data bits from 0 to 1, regardless of the size of the current flow. To shut down the voltage boost circuit, set PIOFF to 1 after programming the port data bits. An example of the sequence of steps is provided below.

(Example Procedure) Shutting Down the in the Watch Mode without a Large Current Flow to Port 9

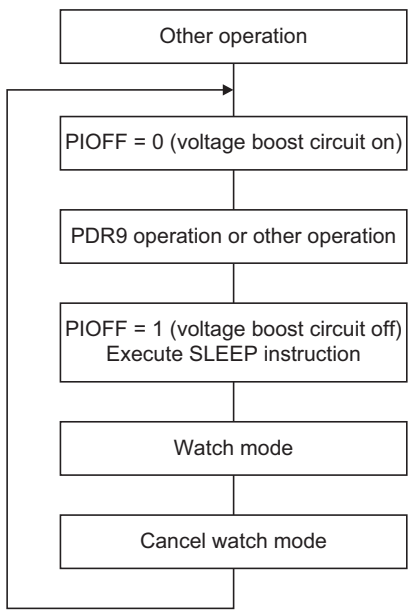

Bit 2—Reserved

This bit is reserved; it can only be written with 0.

Bits 1 and 0—$P9_n$/PWM Pin Function Switches

These pins select whether pin P9n/PWMn+1 is used as P9n or as PWMn+1.

Bit n WKPn+1	Description	
0	Functions as $P9_n$ output pin	(initial value)
1	Functions as PWM_{n+1} output pin	

(n = 0 or 1)

8.9.3 Pin Functions

Table 8.24 shows the port 9 pin functions.

Table 8.24 Port 9 Pin Functions

Pin	Pin Functions and Selection Method		
$P9_3/V_{ref}$*			
	VREFSEL	0	1
	Pin function	$P9_3$ output pin	V_{ref} input pin
$P9_1/PWM_{n+1}$ to $P9_0/PWM_{n+1}$			(n = 1 or 0)
	$PMR9_n$	0	1
	Pin function	$P9_n$ output pin	PWM_{n+1} output pin

Note: * The V_{ref} pin is the input pin for the LVD's external reference voltage. It is implemented on the H8/38124 Group only.

8.9.4 Pin States

Table 8.25 shows the port 9 pin states in each operating mode.

Table 8.25 Port 9 Pin States

Pins	Reset	Sleep	Subsleep	Standby	Watch	Subactive	Active
$P9_5$ to $P9_2$ $P9_n/PWM_{n+1}$ to $P9_n/PWM_{n+1}$	High-impedance	Retains previous state	Retains previous state	High-impedance	Retains previous state	Functional	Functional

(n = 1 or 0)

8.10 Port A

8.10.1 Overview

Port A is a 4-bit I/O port, configured as shown in figure 8.9.

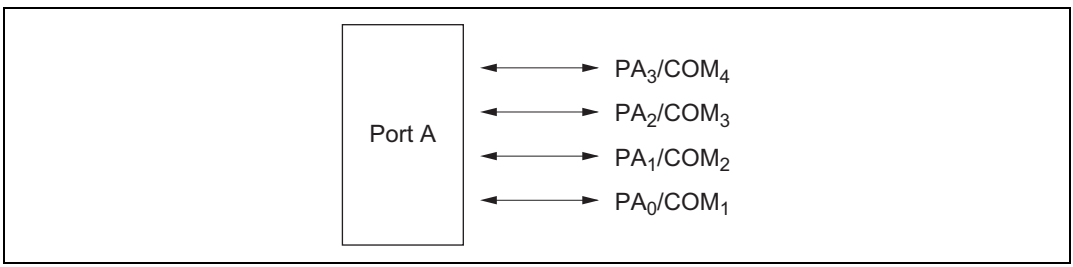

Figure 8.9 Port A Pin Configuration

8.10.2 Register Configuration and Description

Table 8.26 shows the port A register configuration.

Table 8.26 Port A Registers

Name	Abbr.	R/W	Initial Value	Address
Port data register A	PDRA	R/W	H'F0	H'FFDD
Port control register A	PCRA	W	H'F0	H'FFED

Port Data Register A (PDRA)

Bit	7	6	5	4	3	2	1	0
	—	—	—	—	PA_3	PA_2	PA_1	PA_0
Initial value	1	1	1	1	0	0	0	0
Read/Write	—	—	—	—	R/W	R/W	R/W	R/W

PDRA is an 8-bit register that stores data for port A pins PA_3 to PA_0. If port A is read while PCRA bits are set to 1, the values stored in PDRA are read, regardless of the actual pin states. If port A is read while PCRA bits are cleared to 0, the pin states are read.

Upon reset, PDRA is initialized to H'F0.

Port Control Register A (PCRA)

Bit	7	6	5	4	3	2	1	0
	—	—	—	—	$PCRA_3$	$PCRA_2$	$PCRA_1$	$PCRA_0$
Initial value	1	1	1	1	0	0	0	0
Read/Write	—	—	—	—	W	W	W	W

PCRA controls whether each of port A pins PA_3 to PA_0 functions as an input pin or output pin. Setting a PCRA bit to 1 makes the corresponding pin an output pin, while clearing the bit to 0 makes the pin an input pin. PCRA and PDRA settings are valid when the corresponding pins are designated for general-purpose input/output by LPCR.

Upon reset, PCRA is initialized to H'F0.

PCRA is a write-only register, which is always read as all 1s.

8.10.3 Pin Functions

Table 8.27 shows the port A pin functions.

Table 8.27 Port A Pin Functions

Pin	Pin Functions and Selection Method			
PA_3/COM_4	The pin function depends on bit $PCRA_3$ in PCRA and bits SGS3 to SGS0.			
	SGS3 to SGS0	0000	0000	Not 0000
	$PCRA_3$	0	1	*
	Pin function	PA_3 input pin	PA_3 output pin	COM_4 output pin
PA_2/COM_3	The pin function depends on bit $PCRA_2$ in PCRA and bits SGS3 to SGS0.			
	SGS3 to SGS0	0000	0000	Not 0000
	$PCRA_2$	0	1	*
	Pin function	PA_2 input pin	PA_2 output pin	COM_3 output pin
PA_1/COM_2	The pin function depends on bit $PCRA_1$ in PCRA and bits SGS3 to SGS0.			
	SGS3 to SGS0	0000	0000	Not 0000
	$PCRA_1$	0	1	*
	Pin function	PA_1 input pin	PA_1 output pin	COM_2 output pin
PA_0/COM_1	The pin function depends on bit $PCRA_0$ in PCRA and bits SGS3 to SGS0.			
	SGS3 to SGS0	0000		Not 0000
	$PCRA_0$	0	1	*
	Pin function	PA_0 input pin	PA_0 output pin	COM_1 output pin

*: Don't care

8.10.4 Pin States

Table 8.28 shows the port A pin states in each operating mode.

Table 8.28 Port A Pin States

Pins	Reset	Sleep	Subsleep	Standby	Watch	Subactive	Active
PA_3/COM_4 PA_2/COM_3 PA_1/COM_2 PA_0/COM_1	High-impedance	Retains previous state	Retains previous state	High-impedance	Retains previous state	Functional	Functional

8.11 Port B

8.11.1 Overview

Port B is an 8-bit input-only port, configured as shown in figure 8.10.

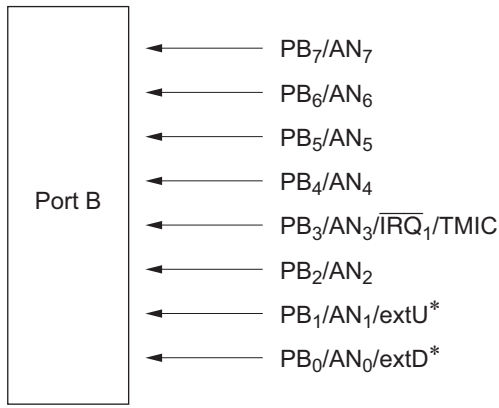

Note: * The extU and extD pins are implemented on the H8/38124 Group only.

Figure 8.10 Port B Pin Configuration

8.11.2 Register Configuration and Description

Table 8.29 shows the port B register configuration.

Table 8.29 Port B Register

Name	Abbr.	R/W	Initial Value	Address
Port data register B	PDRB	R	—	H'FFDE
Port mode register B	PMRB	R/W	H'F7	H'FFEE

Port Data Register B (PDRB)

Bit	7	6	5	4	3	2	1	0
	PB_7	PB_6	PB_5	PB_4	PB_3	PB_2	PB_1	PB_0
Read/Write	R	R	R	R	R	R	R	R

Reading PDRB always gives the pin states. However, if a port B pin is selected as an analog input channel for the A/D converter by AMR bits CH3 to CH0, that pin reads 0 regardless of the input voltage.

Port Mode Register B (PMRB)

Bit	7	6	5	4	3	2	1	0
	—	—	—	—	IRQ1	—	—	—
Initial value	1	1	1	1	0	1	1	1
Read/Write	—	—	—	—	R/W	—	—	—

PMRB is an 8-bit read/write register controlling the selection of the PB_3 pin function. Upon reset, PMRB is initialized to H'F7.

Bits 7 to 4 and 2 to 0—Reserved

Bits 7 to 4 and 2 to 0 are reserved; they are always read as 1 and cannot be modified.

Bit 3—PB_3/AN_3/$\overline{IRQ}_1$ Pin Function Switch (IRQ1)

These bits select whether pin PB_3/AN_3/$\overline{IRQ}_1$ is used as PB_3/AN_3 or as $\overline{IRQ}_1$/TMIC.

Bit 3 IRQ1	Description	
0	Functions as PB_3/AN_3 input pin	(initial value)
1	Functions as $\overline{IRQ}_1$/TMIC input pin	

Note: Rising or falling edge sensing can be selected for the $\overline{IRQ}_1$/TMIC pin.

For TMIC pin setting information, see the Timer More Register C (TMC) description in section 9.3.2, Register Descriptions.

8.11.3 Pin Functions

Table 8.30 shows the port B pin functions.

Table 8.30 Port B Pin Functions

Pin	Pin Functions and Selection Method
PB_7/AN_7	The pin function depends on bits CH3 to CH0 in AMR.

CH3 to CH0	Not 1011	1011
Pin function	PB_7 input pin	AN_7 input pin

PB_6/AN_6	The pin function depends on bits CH3 to CH0 in AMR.

CH3 to CH0	Not 1010	1010
Pin function	PB_6 input pin	AN_6 input pin

PB_5/AN_5	The pin function depends on bits CH3 to CH0 in AMR.

CH3 to CH0	Not 1001	1001
Pin function	PB_5 input pin	AN_5 input pin

PB_4/AN_4	The pin function depends on bits CH3 to CH0 in AMR.

CH3 to CH0	Not 1000	1000
Pin function	PB_4 input pin	AN_4 input pin

$PB_3/AN_3/\overline{IRQ_1}$/ TMIC	The pin function depends on bits CH3 to CH0 in AMR and bit IRQ1 in PMRB and bits TMC2 to TMC0 in TMC.

IRQ_1	0		1	
CH3 to CH0	Not 0111	0111	*	
TMC2 to TMC0	*		Not 111	111
Pin function	PB_3 input pin	AN_3 input pin	$\overline{IRQ_1}$ input pin	TMIC input pin

Note: When this pin is used as the TMIC input pin, clear IEN1 to 0 in IENR1 to disable the IRQ1 interrupt.

PB_2/AN_2	The pin function depends on bits CH3 to CH0 in AMR.

CH3 to CH0	Not 0110	0110
Pin function	PB_2 input pin	AN_2 input pin

Pin	Pin Functions and Selection Method
PB_1/AN_1/extU	Switching is accomplished by combining CH3 to CH0 in AMR and VINTUSEL in LVDCR as shown below. Note that VINTUSEL is implemented on the H8/38124 Group only.

VINTUSEL	0		1
CH3 to CH0	Not B'0101	B'0101	*
Pin function	PB_1 input pin	AN_1 input pin	extU input pin

Note: The extU pin is implemented on the H8/38124 Group only.

PB_0/AN_0/extD	Switching is accomplished by combining CH3 to CH0 in AMR and VINTDSEL in LVDCR as shown below. Note that VINTDSEL is implemented on the H8/38124 Group only.

VINTDSEL	0		1
CH3 to CH0	Not B'0100	B'0100	*
Pin function	PB_0 input pin	AN_0 input pin	extD input pin

Note: The extD pin is implemented on the H8/38124 Group only.

*: Don't care

8.12 Input/Output Data Inversion Function

8.12.1 Overview

With input pin RXD_{32} and output pin TXD_{32}, the data can be handled in inverted form.

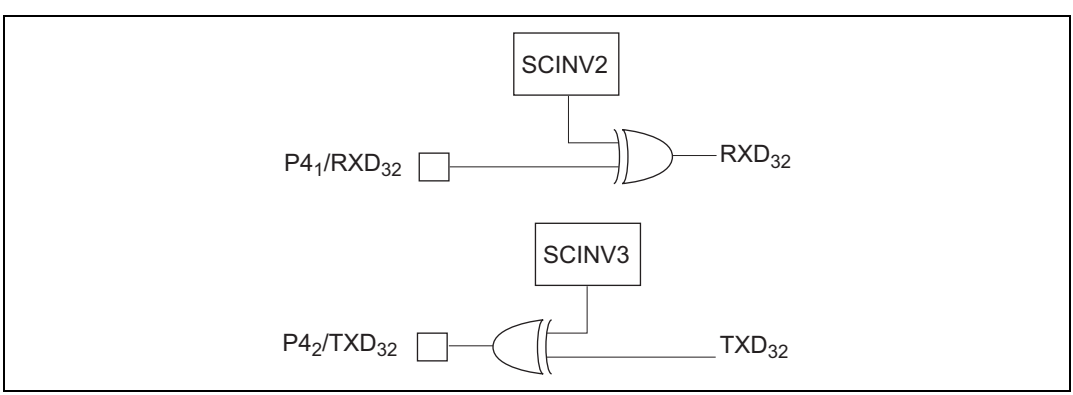

Figure 8.11 Input/Output Data Inversion Function

8.12.2 Register Configuration and Descriptions

Table 8.31 shows the registers used by the input/output data inversion function.

Table 8.31 Register Configuration

Name	Abbr.	R/W	Address
Serial port control register	SPCR	R/W	H'FF91

Serial Port Control Register (SPCR)

Bit	7	6	5	4	3	2	1	0
	—	—	SPC32	—	SCINV3	SCINV2	—	—
Initial value	1	1	0	—	0	0	—	—
Read/Write	—	—	R/W	W	R/W	R/W	W	W

SPCR is an 8-bit readable/writable register that performs RXD_{32} and TXD_{32} pin input/output data inversion switching.

Bits 7 and 6—Reserved

Bits 7 and 6 are reserved; they are always read as 1 and cannot be modified.

Bit 5—$P4_2$/TXD_{32} Pin Function Switch (SPC32)

This bit selects whether pin $P4_2$/TXD_{32} is used as $P4_2$ or as TXD_{32}.

Bit 5 SPC32	Description	
0	Functions as $P4_2$ I/O pin	(initial value)
1	Functions as TXD_{32} output pin*	

Note: * Set the TE bit in SCR3 after setting this bit to 1.

Bit 4—Reserved

Bit 4 is reserved; it can only be written with 0.

Bit 3—TXD_{32} Pin Output Data Inversion Switch

Bit 3 specifies whether or not TXD_{32} pin output data is to be inverted.

Bit 3 SCINV3	Description	
0	TXD_{32} output data is not inverted	(initial value)
1	TXD_{32} output data is inverted	

Bit 2—RXD_{32} Pin Input Data Inversion Switch

Bit 2 specifies whether or not RXD_{32} pin input data is to be inverted.

Bit 2 SCINV2	Description	
0	RXD_{32} input data is not inverted	(initial value)
1	RXD_{32} input data is inverted	

Bits 1 and 0—Reserved

Bits 1 and 0 are reserved; they can only be written with 0.

8.12.3 Note on Modification of Serial Port Control Register

When a serial port control register is modified, the data being input or output up to that point is inverted immediately after the modification, and an invalid data change is input or output. When modifying a serial port control register, do so in a state in which data changes are invalidated.

8.13 Application Note

8.13.1 The Management of the Un-Use Terminal

If an I/O pin not used by the user system is floating, pull it up or down.

- If an unused pin is an input pin, handle it in one of the following ways:
  - Pull it up to V_{CC} with an on-chip pull-up MOS.
  - Pull it up to V_{CC} with an external resistor of approximately 100 kΩ.
  - Pull it down to V_{SS} with an external resistor of approximately 100 kΩ.
  - For a pin also used by the A/D converter, pull it up to AV_{CC}.
- If an unused pin is an output pin, handle it in one of the following ways:
  - Set the output of the unused pin to high and pull it up to V_{CC} with an on-chip pull-up MOS.
  - Set the output of the unused pin to high and pull it up to V_{CC} with an external resistor of approximately 100 kΩ.
  - Set the output of the unused pin to low and pull it down to GND with an external resistor of approximately 100 kΩ.

Section 9 Timers

9.1 Overview

This LSI provides six timers: timers A, C, F, G, and a watchdog timer, and an asynchronous event counter. The functions of these timers are outlined in table 9.1.

Table 9.1 Timer Functions

Name	Functions	Internal Clock	Event Input Pin	Waveform Output Pin	Remarks
Timer A	• 8-bit timer • Interval function	ϕ/8 to ϕ/8192 (8 choices)	—	—	
	• Time base	ϕ_W/128 (choice of 4 overflow periods)			
Timer C	• 8-bit timer • Interval function • Event counting function • Up-count/down-count selectable	ϕ/4 to ϕ/8192, ϕ_W/4 (7 choices)	TMIC	—	Up-count/ down-count controllable by software or hardware
Timer F	• 16-bit timer • Event counting function • Also usable as two independent 8-bit timers • Output compare output function	ϕ/4 to ϕ/32, ϕ_W/4 (4 choices)	TMIF	TMOFL TMOFH	
Timer G	• 8-bit timer • Input capture function • Interval function	ϕ/2 to ϕ/64, ϕ_W/4 (4 choices)	TMIG	—	Counter clearing option Built-in capture input signal noise canceler
Watchdog timer*	• Reset signal generated when 8-bit counter overflows	ϕ/8192 ϕ_W/32	—	—	H8/38024, H8/38024S, H8/38024R Group
		ϕ/64 to ϕ/8192 ϕ_W/32 On-chip oscillator			H8/38124 Group

Name	Functions	Internal Clock	Event Input Pin	Waveform Output Pin	Remarks
Asynchro-nous event counter	• 16-bit counter • Also usable as two independent 8-bit counters • Counts events asynchronous to ϕ and ϕw • Can count asynchronous events (rising/falling/both edges) independ-ently of the MCU's internal clock	ϕ/2 to ϕ/8 (3 choices)	AEVL AEVH IRQAEC	—	

Note: * The watchdog timer functions differently on the H8/38024, H8/38024S, H8/38024R Group and H8/38124 Group. See section 9.6, Watchdog Timer, for details.

9.2 Timer A

9.2.1 Overview

Timer A is an 8-bit timer with interval timing and real-time clock time-base functions. The clock time-base function is available when a 32.768 kHz crystal resonator is connected as the subclock.

Features

Features of timer A are given below.

- Choice of eight internal clock sources (ϕ/8192, ϕ/4096, ϕ/2048, ϕ/512, ϕ/256, ϕ/128, ϕ/32, ϕ/8).
- Choice of four overflow periods (1 s, 0.5 s, 0.25 s, 31.25 ms) when timer A is used as a clock time base (using a 32.768 kHz crystal resonator is connected as the subclock).
- An interrupt is requested when the counter overflows.
- Use of module standby mode enables this module to be placed in standby mode independently when not used.

Block Diagram

Figure 9.1 shows a block diagram of timer A.

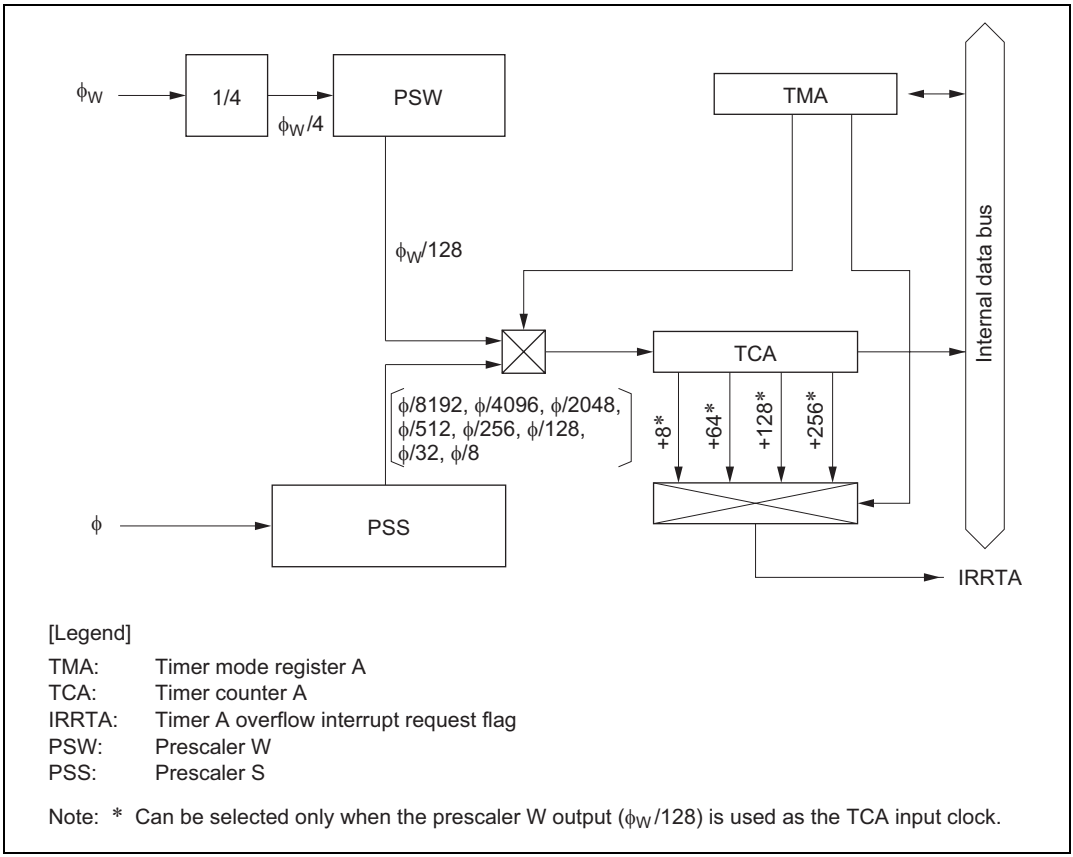

Figure 9.1 Block Diagram of Timer A

Register Configuration

Table 9.2 shows the register configuration of timer A.

Table 9.2 Timer A Registers

Name	Abbr.	R/W	Initial Value	Address
Timer mode register A	TMA	R/W	—	H'FFB0
Timer counter A	TCA	R	H'00	H'FFB1
Clock stop register 1	CKSTPR1	R/W	H'FF	H'FFFA

9.2.2 Register Descriptions

Timer Mode Register A (TMA)

Bit	7	6	5	4	3	2	1	0
	—	—	—	—	TMA3	TMA2	TMA1	TMA0
Initial value	—	—	—	1	0	0	0	0
Read/Write	W	W	W	—	R/W	R/W	R/W	R/W

TMA is an 8-bit read/write register for selecting the prescaler, and input clock.

Bits 7 to 5—Reserved

Bits 7 to 5 are reserved; only 0 can be written to these bits.

Bit 4—Reserved

Bit 4 is reserved; it is always read as 1, and cannot be modified.

Bits 3 to 0—Internal Clock Select (TMA3 to TMA0)

Bits 3 to 0 select the clock input to TCA. The selection is made as follows.

				Description	
Bit 3 TMA3	**Bit 2 TMA2**	**Bit 1 TMA1**	**Bit 0 TMA0**	**Prescaler and Divider Ratio or Overflow Period**	**Function**
0	0	0	0	PSS, ϕ/8192 (initial value)	Interval timer
			1	PSS, ϕ/4096	
		1	0	PSS, ϕ/2048	
			1	PSS, ϕ/512	
	1	0	0	PSS, ϕ/256	
			1	PSS, ϕ/128	
		1	0	PSS, ϕ/32	
			1	PSS, ϕ/8	
1	0	0	0	PSW, 1 s	Clock time base (when using 32.768 kHz)
			1	PSW, 0.5 s	
		1	0	PSW, 0.25 s	
			1	PSW, 0.03125 s	
	1	0	0	PSW and TCA are reset	
			1		
		1	0		
			1		

Timer Counter A (TCA)

Bit	7	6	5	4	3	2	1	0
	TCA7	TCA6	TCA5	TCA4	TCA3	TCA2	TCA1	TCA0
Initial value	0	0	0	0	0	0	0	0
Read/Write	R	R	R	R	R	R	R	R

TCA is an 8-bit read-only up-counter, which is incremented by internal clock input. The clock source for input to this counter is selected by bits TMA3 to TMA0 in timer mode register A (TMA). TCA values can be read by the CPU in active mode, but cannot be read in subactive mode. When TCA overflows, the IRRTA bit in interrupt request register 1 (IRR1) is set to 1.

TCA is cleared by setting bits TMA3 and TMA2 of TMA to 11.

Upon reset, TCA is initialized to H'00.

Clock Stop Register 1 (CKSTPR1)

Bit:	7	6	5	4	3	2	1	0
	—	—	S32CKSTP	ADCKSTP	TGCKSTP	TFCKSTP	TCCKSTP	TACKSTP
Initial value:	1	1	1	1	1	1	1	1
Read/Write:	—	—	R/W	R/W	R/W	R/W	R/W	R/W

CKSTPR1 is an 8-bit read/write register that performs module standby mode control for peripheral modules. Only the bit relating to timer A is described here. For details of the other bits, see the sections on the relevant modules.

Bit 0—Timer A Module Standby Mode Control (TACKSTP)

Bit 0 controls setting and clearing of module standby mode for timer A.

TACKSTP	Description	
0	Timer A is set to module standby mode	
1	Timer A module standby mode is cleared	(initial value)

9.2.3 Timer Operation

Interval Timer Operation

When bit TMA3 in timer mode register A (TMA) is cleared to 0, timer A functions as an 8-bit interval timer.

Upon reset, TCA is cleared to H'00 and bit TMA3 is cleared to 0, so up-counting and interval timing resume immediately. The clock input to timer A is selected by bits TMA2 to TMA0 in TMA; any of eight internal clock signals output by prescaler S can be selected.

After the count value in TCA reaches H'FF, the next clock signal input causes timer A to overflow, setting bit IRRTA to 1 in interrupt request register 1 (IRR1). If IENTA = 1 in interrupt enable register 1 (IENR1), a CPU interrupt is requested.*

At overflow, TCA returns to H'00 and starts counting up again. In this mode timer A functions as an interval timer that generates an overflow output at intervals of 256 input clock pulses.

Note: * For details on interrupts, see section 3.3, Interrupts.

Real-Time Clock Time Base Operation

When bit TMA3 in TMA is set to 1, timer A functions as a real-time clock time base by counting clock signals output by prescaler W. The overflow period of timer A is set by bits TMA1 and TMA0 in TMA. A choice of four periods is available. In time base operation (TMA3 = 1), setting bit TMA2 to 1 clears both TCA and prescaler W to their initial values of H'00.

9.2.4 Timer A Operation States

Table 9.3 summarizes the timer A operation states.

Table 9.3 Timer A Operation States

Operation Mode		Reset	Active	Sleep	Watch	Sub-active	Sub-sleep	Standby	Module Standby
TCA	Interval	Reset	Functions	Functions	Halted	Halted	Halted	Halted	Halted
	Clock time base	Reset	Functions	Functions	Functions	Functions	Functions	Halted	Halted
TMA		Reset	Functions	Retained	Retained	Functions	Retained	Retained	Retained

Note: When the real-time clock time base function is selected as the internal clock of TCA in active mode or sleep mode, the internal clock is not synchronous with the system clock, so it is synchronized by a synchronizing circuit. This may result in a maximum error of 1/ϕ (s) in the count cycle.

9.2.5 Application Note

When bit 0 (TACKSTP) of the clock stop register 1 (CKSTPR1) is cleared to 0, bit 3 (TMA3) of the timer mode register A (TMA) cannot be rewritten.

Set bit 0 (TACKSTP) of the clock stop register 1 (CKSTPR1) to 1 before rewriting bit 3 (TMA3) of the timer mode register A (TMA).

9.3 Timer C

9.3.1 Overview

Timer C is an 8-bit timer that increments or decrements each time a clock pulse is input. This timer has two operation modes, interval and auto reload.

Features

Features of timer C are given below.

- Choice of seven internal clock sources (ϕ/8192, ϕ/2048, ϕ/512, ϕ/64, ϕ/16, ϕ/4, ϕ_W/4) or an external clock (can be used to count external events).
- An interrupt is requested when the counter overflows.
- Up/down-counter switching is possible by hardware or software.
- Subactive mode or subsleep mode operation is possible when ϕ_W/4 is selected as the internal clock, or when an external clock is selected.
- Use of module standby mode enables this module to be placed in standby mode independently when not used.

Block Diagram

Figure 9.2 shows a block diagram of timer C.

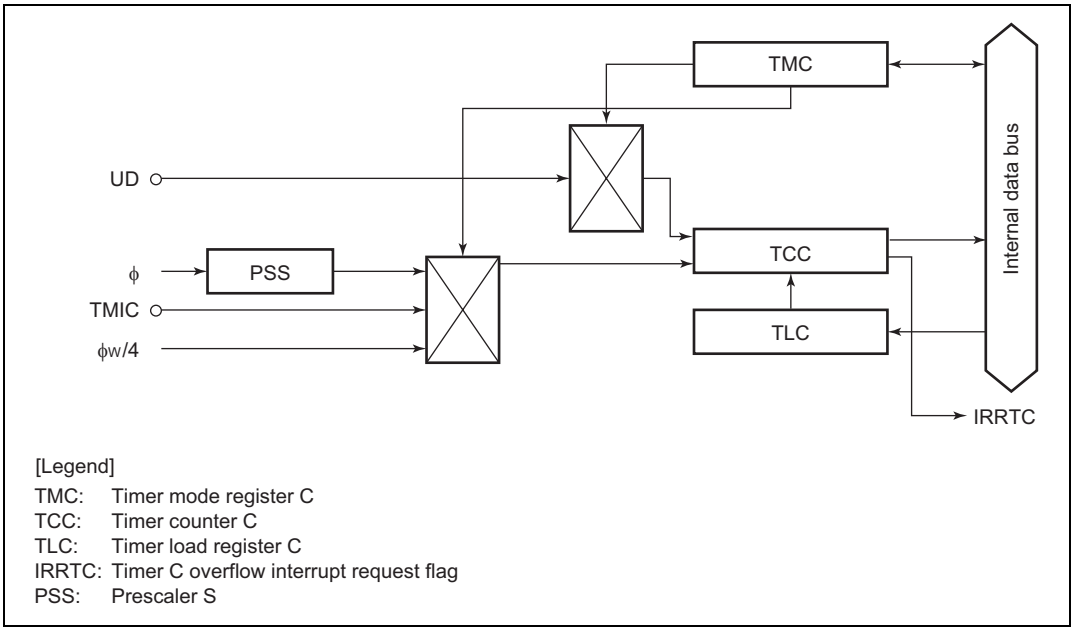

Figure 9.2 Block Diagram of Timer C

Pin Configuration

Table 9.4 shows the timer C pin configuration.

Table 9.4 Pin Configuration

Name	Abbr.	I/O	Function
Timer C event input	TMIC	Input	Input pin for event input to TCC
Timer C up/down select	UD	Input	Timer C up/down-count selection

Register Configuration

Table 9.5 shows the register configuration of timer C.

Table 9.5 Timer C Registers

Name	Abbr.	R/W	Initial Value	Address
Timer mode register C	TMC	R/W	H'18	H'FFB4
Timer counter C	TCC	R	H'00	H'FFB5
Timer load register C	TLC	W	H'00	H'FFB5
Clock stop register 1	CKSTPR1	R/W	H'FF	H'FFFA

9.3.2 Register Descriptions

Timer Mode Register C (TMC)

Bit	7	6	5	4	3	2	1	0
	TMC7	TMC6	TMC5	—	—	TMC2	TMC1	TMC0
Initial value	0	0	0	1	1	0	0	0
Read/Write	R/W	R/W	R/W	—	—	R/W	R/W	R/W

TMC is an 8-bit read/write register for selecting the auto-reload function and input clock, and performing up/down-counter control.

Upon reset, TMC is initialized to H'18.

Bit 7—Auto-Reload Function Select (TMC7)

Bit 7 selects whether timer C is used as an interval timer or auto-reload timer.

Bit 7 TMC7	Description	
0	Interval timer function selected	(initial value)
1	Auto-reload function selected	

Bits 6 and 5—Counter Up/Down Control (TMC6, TMC5)

Selects whether TCC up/down control is performed by hardware using UD pin input, or whether TCC functions as an up-counter or a down-counter.

Bit 6 TMC6	Bit 5 TMC5	Description	
0	0	TCC is an up-counter	(initial value)
0	1	TCC is a down-counter	
1	*	Hardware control by UD pin input UD pin input high: Down-counter UD pin input low: Up-counter	

*: Don't care

Bits 4 and 3—Reserved

Bits 4 and 3 are reserved; they are always read as 1 and cannot be modified.

Bits 2 to 0—Clock Select (TMC2 to TMC0)

Bits 2 to 0 select the clock input to TCC. For external event counting, either the rising or falling edge can be selected.

Bit 2 TMC2	Bit 1 TMC1	Bit 0 TMC0	Description	
0	0	0	Internal clock: ϕ/8192	(initial value)
0	0	1	Internal clock: ϕ/2048	
0	1	0	Internal clock: ϕ/512	
0	1	1	Internal clock: ϕ/64	
1	0	0	Internal clock: ϕ/16	
1	0	1	Internal clock: ϕ/4	
1	1	0	Internal clock: ϕ_W/4	
1	1	1	External event (TMIC): rising or falling edge*	

Note: * The edge of the external event signal is selected by bit IEG1 in the IRQ edge select register (IEGR). See IRQ Edge Select Register (IEGR) in section 3.3.2, Interrupt Control Registers, for details. IRQ1 in port mode register B (PMRB) must be set to 1 before setting 111 in bits TMC2 to TMC0.

Timer Counter C (TCC)

Bit	7	6	5	4	3	2	1	0
	TCC7	TCC6	TCC5	TCC4	TCC3	TCC2	TCC1	TCC0
Initial value	0	0	0	0	0	0	0	0
Read/Write	R	R	R	R	R	R	R	R

TCC is an 8-bit read-only up/down-counter, which is incremented or decremented by internal clock or external event input. The clock source for input to this counter is selected by bits TMC2 to TMC0 in timer mode register C (TMC). TCC values can be read by the CPU at any time.

When TCC overflows from H'FF to H'00 or to the value set in TLC, or underflows from H'00 to H'FF or to the value set in TLC, the IRRTC bit in IRR2 is set to 1.

TCC is allocated to the same address as TLC.

Upon reset, TCC is initialized to H'00.

Timer Load Register C (TLC)

Bit	7	6	5	4	3	2	1	0
	TLC7	TLC6	TLC5	TLC4	TLC3	TLC2	TLC1	TLC0
Initial value	0	0	0	0	0	0	0	0
Read/Write	W	W	W	W	W	W	W	W

TLC is an 8-bit write-only register for setting the reload value of timer counter C (TCC).

When a reload value is set in TLC, the same value is loaded into timer counter C as well, and TCC starts counting up/down from that value. When TCC overflows or underflows during operation in auto-reload mode, the TLC value is loaded into TCC. Accordingly, overflow/underflow period can be set within the range of 1 to 256 input clocks.

The same address is allocated to TLC as to TCC.

Upon reset, TLC is initialized to H'00.

Clock Stop Register 1 (CKSTPR1)

Bit:	7	6	5	4	3	2	1	0
	—	—	S32CKSTP	ADCKSTP	TGCKSTP	TFCKSTP	TCCKSTP	TACKSTP
Initial value:	1	1	1	1	1	1	1	1
Read/Write:	—	—	R/W	R/W	R/W	R/W	R/W	R/W

CKSTPR1 is an 8-bit read/write register that performs module standby mode control for peripheral modules. Only the bit relating to timer C is described here. For details of the other bits, see the sections on the relevant modules.

Bit 1—Timer C Module Standby Mode Control (TCCKSTP)

Bit 1 controls setting and clearing of module standby mode for timer C.

TCCKSTP	Description	
0	Timer C is set to module standby mode	
1	Timer C module standby mode is cleared	(initial value)

9.3.3 Timer Operation

Interval Timer Operation

When bit TMC7 in timer mode register C (TMC) is cleared to 0, timer C functions as an 8-bit interval timer.

Upon reset, TCC is initialized to H'00 and TMC to H'18, so TCC continues up-counting as an interval up-counter without halting immediately after a reset. The timer C operating clock is selected from seven internal clock signals output by prescalers S and W, or an external clock input at pin TMIC. The selection is made by bits TMC2 to TMC0 in TMC.

TCC up/down-count control can be performed either by software or hardware. The selection is made by bits TMC6 and TMC5 in TMC.

After the count value in TCC reaches H'FF (H'00), the next clock input causes timer C to overflow (underflow), setting bit IRRTC in IRR2 to 1. If IENTC = 1 in interrupt enable register 2 (IENR2), a CPU interrupt is requested.

At overflow (underflow), TCC returns to H'00 (H'FF) and starts counting up (down) again.

During interval timer operation (TMC7 = 0), when a value is set in timer load register C (TLC), the same value is set in TCC.

Note: For details on interrupts, see section 3.3, Interrupts.

Auto-Reload Timer Operation

Setting bit TMC7 in TMC to 1 causes timer C to function as an 8-bit auto-reload timer. When a reload value is set in TLC, the same value is loaded into TCC, becoming the value from which TCC starts its count.

After the count value in TCC reaches H'FF (H'00), the next clock signal input causes timer C to overflow/underflow. The TLC value is then loaded into TCC, and the count continues from that value. The overflow/underflow period can be set within a range from 1 to 256 input clocks, depending on the TLC value.

The clock sources, up/down control, and interrupts in auto-reload mode are the same as in interval mode.

In auto-reload mode (TMC7 = 1), when a new value is set in TLC, the TLC value is also set in TCC.

Event Counter Operation

Timer C can operate as an event counter, counting rising or falling edges of an external event signal input at pin TMIC. External event counting is selected by setting bits TMC2 to TMC0 in timer mode register C (TMC) to all 1s (111). TCC counts up/down at the rising/falling edge of an external event signal input at pin TMIC.

When timer C is used to count external event input, bit IRQ1 in PMRB should be set to 1 and bit IEN1 in IENR1 cleared to 0 to disable interrupt IRQ1 requests.

TCC Up/Down Control by Hardware

With timer C, TCC up/down control can be performed by UD pin input. When bit TMC6 in TMC is set to 1, TCC functions as an up-counter when UD pin input is low, and as a down-counter when high.

When using UD pin input, set bit UD in PMR3 to 1.

9.3.4 Timer C Operation States

Table 9.6 summarizes the timer C operation states.

Table 9.6 Timer C Operation States

Operation Mode		Reset	Active	Sleep	Watch	Sub-active	Sub-sleep	Standby	Module Standby
TCC	Interval	Reset	Functions	Functions	Halted	Functions/ Halted*	Functions/ Halted*	Halted	Halted
	Auto reload	Reset	Functions	Functions	Halted	Functions/ Halted*	Functions/ Halted*	Halted	Halted
TMC		Reset	Functions	Retained	Retained	Functions	Retained	Retained	Retained

Note: * When $\phi w/4$ is selected as the TCC internal clock in active mode or sleep mode, since the system clock and internal clock are mutually asynchronous, synchronization is maintained by a synchronization circuit. This results in a maximum count cycle error of $1/\phi$ (s). When the counter is operated in subactive mode or subsleep mode, either select $\phi w/4$ as the internal clock or select an external clock. The counter will not operate on any other internal clock. If $\phi w/4$ is selected as the internal clock for the counter when $\phi w/8$ has been selected as subclock ϕ_{SUB}, the lower 2 bits of the counter operate on the same cycle, and the operation of the least significant bit is unrelated to the operation of the counter.

9.4 Timer F

9.4.1 Overview

Timer F is a 16-bit timer with a built-in output compare function. As well as counting external events, timer F also provides for counter resetting, interrupt request generation, toggle output, etc., using compare match signals. Timer F can also be used as two independent 8-bit timers (timer FH and timer FL).

Features

Features of timer F are given below.

- Choice of four internal clock sources (ϕ/32, ϕ/16, ϕ/4, ϕw/4) or an external clock (can be used as an external event counter)
- TMOFH/TMOFL pin toggle output provided using a single compare match signal (toggle output initial value can be set)
- Counter resetting by a compare match signal
- Two interrupt sources: one compare match, one overflow
- Can operate as two independent 8-bit timers (timer FH and timer FL) (in 8-bit mode).

	Timer FH 8-Bit Timer*	**Timer FL 8-Bit Timer/Event Counter**
Internal clock	Choice of 4 (ϕ/32, ϕ/16, ϕ/4, ϕw/4)	
Event input	—	TMIF pin
Toggle output	One compare match signal, output to TMOFH pin(initial value settable)	One compare match signal, output to TMOFL pin (initial value settable)
Counter reset	Counter can be reset by compare match signal	
Interrupt sources	One compare match One overflow	

Note: * When timer F operates as a 16-bit timer, it operates on the timer FL overflow signal.

- Operation in watch mode, subactive mode, and subsleep mode

  When ϕw/4 is selected as the internal clock, timer F can operate in watch mode, subactive mode, and subsleep mode.
- Use of module standby mode enables this module to be placed in standby mode independently when not used.

Block Diagram

Figure 9.3 shows a block diagram of timer F.

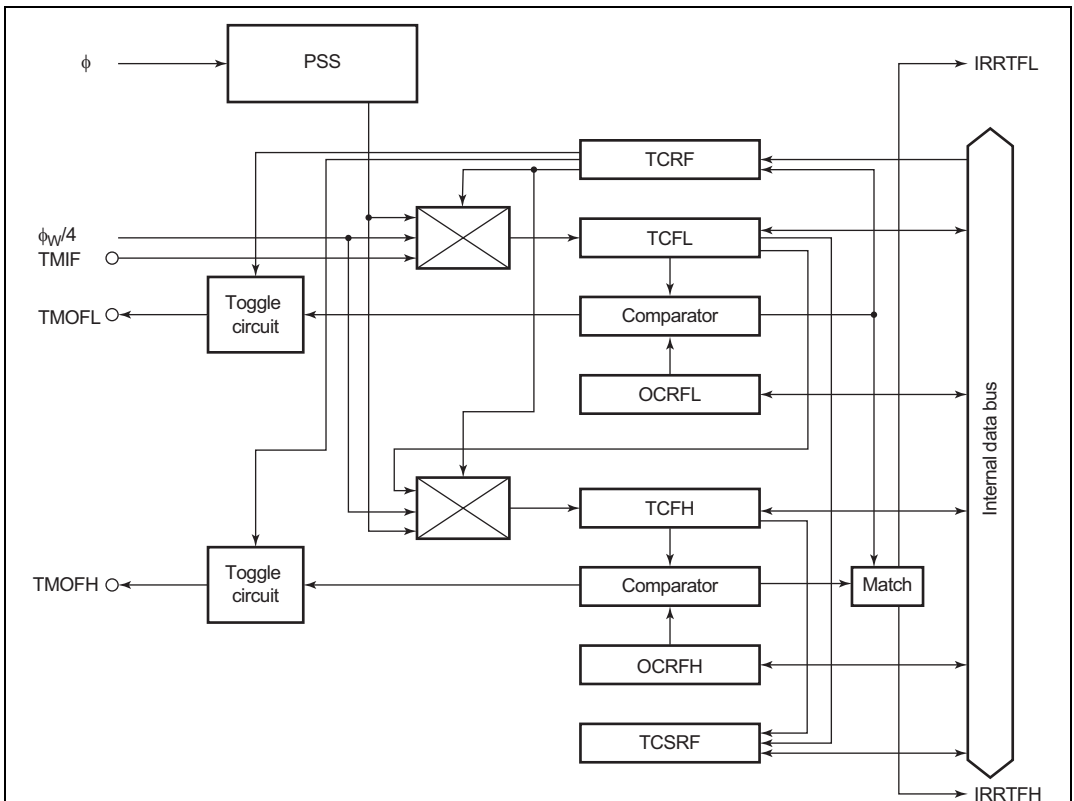

[Legend]

TCRF:	Timer control register F
TCSRF:	Timer control/status register F
TCFH:	8-bit timer counter FH
TCFL:	8-bit timer counter FL
OCRFH:	Output compare register FH
OCRFL:	Output compare register FL
IRRTFH:	Timer FH interrupt request flag
IRRTFL:	Timer FL interrupt request flag
PSS:	Prescaler S

Figure 9.3 Block Diagram of Timer F

Pin Configuration

Table 9.7 shows the timer F pin configuration.

Table 9.7 Pin Configuration

Name	Abbr.	I/O	Function
Timer F event input	TMIF	Input	Event input pin for input to TCFL
Timer FH output	TMOFH	Output	Timer FH toggle output pin
Timer FL output	TMOFL	Output	Timer FL toggle output pin

Register Configuration

Table 9.8 shows the register configuration of timer F.

Table 9.8 Timer F Registers

Name	Abbr.	R/W	Initial Value	Address
Timer control register F	TCRF	W	H'00	H'FFB6
Timer control/status register F	TCSRF	R/W	H'00	H'FFB7
8-bit timer counter FH	TCFH	R/W	H'00	H'FFB8
8-bit timer counter FL	TCFL	R/W	H'00	H'FFB9
Output compare register FH	OCRFH	R/W	H'FF	H'FFBA
Output compare register FL	OCRFL	R/W	H'FF	H'FFBB
Clock stop register 1	CKSTPR1	R/W	H'FF	H'FFFA

9.4.2 Register Descriptions

16-bit Timer Counter (TCF)
8-bit Timer Counter (TCFH)
8-bit Timer Counter (TCFL)

	TCF															
Bit:	15	14	13	12	11	10	9	8	7	6	5	4	3	2	1	0
Initial value:	0	0	0	0	0	0	0	0	0	0	0	0	0	0	0	0
Read/Write:	R/W	R/W	R/W	R/W	R/W	R/W	R/W	R/W	R/W	R/W	R/W	R/W	R/W	R/W	R/W	R/W
	TCFH								TCFL							

TCF is a 16-bit read/write up-counter configured by cascaded connection of 8-bit timer counters TCFH and TCFL. In addition to the use of TCF as a 16-bit counter with TCFH as the upper 8 bits and TCFL as the lower 8 bits, TCFH and TCFL can also be used as independent 8-bit counters.

TCFH and TCFL can be read and written by the CPU, but when they are used in 16-bit mode, data transfer to and from the CPU is performed via a temporary register (TEMP). For details of TEMP, see section 9.4.3, CPU Interface.

TCFH and TCFL are each initialized to H'00 upon reset.

a. 16-bit mode (TCF)

   When CKSH2 is cleared to 0 in TCRF, TCF operates as a 16-bit counter. The TCF input clock is selected by bits CKSL2 to CKSL0 in TCRF.

   TCF can be cleared in the event of a compare match by means of CCLRH in TCSRF.

   When TCF overflows from H'FFFF to H'0000, OVFH is set to 1 in TCSRF. If OVIEH in TCSRF is 1 at this time, IRRTFH is set to 1 in IRR2, and if IENTFH in IENR2 is 1, an interrupt request is sent to the CPU.

b. 8-bit mode (TCFL/TCFH)

   When CKSH2 is set to 1 in TCRF, TCFH, and TCFL operate as two independent 8-bit counters. The TCFH (TCFL) input clock is selected by bits CKSH2 to CKSH0 (CKSL2 to CKSL0) in TCRF.

   TCFH (TCFL) can be cleared in the event of a compare match by means of CCLRH (CCLRL) in TCSRF.

   When TCFH (TCFL) overflows from H'FF to H'00, OVFH (OVFL) is set to 1 in TCSRF. If OVIEH (OVIEL) in TCSRF is 1 at this time, IRRTFH (IRRTFL) is set to 1 in IRR2, and if IENTFH (IENTFL) in IENR2 is 1, an interrupt request is sent to the CPU.

16-bit Output Compare Register (OCRF)
8-bit Output Compare Register (OCRFH)
8-bit Output Compare Register (OCRFL)

	OCRF															
Bit:	15	14	13	12	11	10	9	8	7	6	5	4	3	2	1	0
Initial value:	1	1	1	1	1	1	1	1	1	1	1	1	1	1	1	1
Read/Write:	R/W	R/W	R/W	R/W	R/W	R/W	R/W	R/W	R/W	R/W	R/W	R/W	R/W	R/W	R/W	R/W
	OCRFH								OCRFL							

OCRF is a 16-bit read/write register composed of the two registers OCRFH and OCRFL. In addition to the use of OCRF as a 16-bit register with OCRFH as the upper 8 bits and OCRFL as the lower 8 bits, OCRFH and OCRFL can also be used as independent 8-bit registers.

OCRFH and OCRFL can be read and written by the CPU, but when they are used in 16-bit mode, data transfer to and from the CPU is performed via a temporary register (TEMP). For details of TEMP, see section 9.4.3, CPU Interface.

OCRFH and OCRFL are each initialized to H'FF upon reset.

a. 16-bit mode (OCRF)

When CKSH2 is cleared to 0 in TCRF, OCRF operates as a 16-bit register. OCRF contents are constantly compared with TCF, and when both values match, CMFH is set to 1 in TCSRF. At the same time, IRRTFH is set to 1 in IRR2. If IENTFH in IENR2 is 1 at this time, an interrupt request is sent to the CPU.

Toggle output can be provided from the TMOFH pin by means of compare matches, and the output level can be set (high or low) by means of TOLH in TCRF.

b. 8-bit mode (OCRFH/OCRFL)

When CKSH2 is set to 1 in TCRF, OCRFH, and OCRFL operate as two independent 8-bit registers. OCRFH contents are compared with TCFH, and OCRFL contents are with TCFL. When the OCRFH (OCRFL) and TCFH (TCFL) values match, CMFH (CMFL) is set to 1 in TCSRF. At the same time, IRRTFH (IRRTFL) is set to 1 in IRR2. If IENTFH (IENTFL) in IENR2 is 1 at this time, an interrupt request is sent to the CPU.

Toggle output can be provided from the TMOFH pin (TMOFL pin) by means of compare matches, and the output level can be set (high or low) by means of TOLH (TOLL) in TCRF.

Timer Control Register F (TCRF)

Bit:	7	6	5	4	3	2	1	0
	TOLH	CKSH2	CKSH1	CKSH0	TOLL	CKSL2	CKSL1	CKSL0
Initial value:	0	0	0	0	0	0	0	0
Read/Write:	W	W	W	W	W	W	W	W

TCRF is an 8-bit write-only register that switches between 16-bit mode and 8-bit mode, selects the input clock from among four internal clock sources or external event input, and sets the output level of the TMOFH and TMOFL pins.

TCRF is initialized to H'00 upon reset.

Bit 7—Toggle Output Level H (TOLH)

Bit 7 sets the TMOFH pin output level. The output level is effective immediately after this bit is written.

Bit 7 TOLH	Description	
0	Low level	(initial value)
1	High level	

Bits 6 to 4—Clock Select H (CKSH2 to CKSH0)

Bits 6 to 4 select the clock input to TCFH from among four internal clock sources or TCFL overflow.

Bit 6 CKSH2	Bit 5 CKSH1	Bit 4 CKSH0	Description	
0	0	0	16-bit mode, counting on TCFL overflow signal	(initial value)
0	0	1		
0	1	0		
0	1	1	Use prohibited	
1	0	0	Internal clock: counting on $\phi/32$	
1	0	1	Internal clock: counting on $\phi/16$	
1	1	0	Internal clock: counting on $\phi/4$	
1	1	1	Internal clock: counting on $\phi w/4$	

Bit 3—Toggle Output Level L (TOLL)

Bit 3 sets the TMOFL pin output level. The output level is effective immediately after this bit is written.

Bit 3 TOLL	Description
0	Low level (initial value)
1	High level

Bits 2 to 0—Clock Select L (CKSL2 to CKSL0)

Bits 2 to 0 select the clock input to TCFL from among four internal clock sources or external event input.

Bit 2 CKSL2	Bit 1 CKSL1	Bit 0 CKSL0	Description
0	0	0	Counting on external event (TMIF) rising/falling edge* (initial value)
0	0	1	
0	1	0	
0	1	1	Use prohibited
1	0	0	Internal clock: counting on ϕ/32
1	0	1	Internal clock: counting on ϕ/16
1	1	0	Internal clock: counting on ϕ/4
1	1	1	Internal clock: counting on ϕw/4

Note: * External event edge selection is set by IEG3 in the IRQ edge select register (IEGR). For details, see IRQ Edge Select Register (IEGR) in section 3.3.2, Interrupt Control Registers. Note that the timer F counter may increment if the setting of IRQ3 in port mode register 1 (PMR1) is changed from 0 to 1 or from 1 to 0 while the TMIF pin is low in order to change the TMIF pin function.

Timer Control/Status Register F (TCSRF)

Bit:	7	6	5	4	3	2	1	0
	OVFH	CMFH	OVIEH	CCLRH	OVFL	CMFL	OVIEL	CCLRL
Initial value:	0	0	0	0	0	0	0	0
Read/Write:	R/(W)*	R/(W)*	R/W	R/W	R/(W)*	R/(W)*	R/W	R/W

Note: * Bits 7, 6, 3, and 2 can only be written with 0, for flag clearing.

TCSRF is an 8-bit read/write register that performs counter clear selection, overflow flag setting, and compare match flag setting, and controls enabling of overflow interrupt requests.

TCSRF is initialized to H'00 upon reset.

Bit 7—Timer Overflow Flag H (OVFH)

Bit 7 is a status flag indicating that TCFH has overflowed from H'FF to H'00. This flag is set by hardware and cleared by software. It cannot be set by software.

Bit 7 OVFH	Description
0	Clearing condition: (initial value) After reading OVFH = 1, cleared by writing 0 to OVFH
1	Setting condition: Set when TCFH overflows from H’FF to H’00

Bit 6—Compare Match Flag H (CMFH)

Bit 6 is a status flag indicating that TCFH has matched OCRFH. This flag is set by hardware and cleared by software. It cannot be set by software.

Bit 6 CMFH	Description
0	Clearing condition: (initial value) After reading CMFH = 1, cleared by writing 0 to CMFH
1	Setting condition: Set when the TCFH value matches the OCRFH value

Bit 5—Timer Overflow Interrupt Enable H (OVIEH)

Bit 5 selects enabling or disabling of interrupt generation when TCFH overflows.

Bit 5 OVIEH	Description	
0	TCFH overflow interrupt request is disabled	(initial value)
1	TCFH overflow interrupt request is enabled	

Bit 4—Counter Clear H (CCLRH)

In 16-bit mode, bit 4 selects whether TCF is cleared when TCF and OCRF match.

In 8-bit mode, bit 4 selects whether TCFH is cleared when TCFH and OCRFH match.

Bit 4 CCLRH	Description	
0	16-bit mode: TCF clearing by compare match is disabled 8-bit mode: TCFH clearing by compare match is disabled	(initial value)
1	16-bit mode: TCF clearing by compare match is enabled 8-bit mode: TCFH clearing by compare match is enabled	

Bit 3—Timer Overflow Flag L (OVFL)

Bit 3 is a status flag indicating that TCFL has overflowed from H'FF to H'00. This flag is set by hardware and cleared by software. It cannot be set by software.

Bit 3 OVFL	Description	
0	Clearing condition: After reading OVFL = 1, cleared by writing 0 to OVFL	(initial value)
1	Setting condition: Set when TCFL overflows from H’FF to H’00	

Bit 2—Compare Match Flag L (CMFL)

Bit 2 is a status flag indicating that TCFL has matched OCRFL. This flag is set by hardware and cleared by software. It cannot be set by software.

Bit 2 CMFL	Description	
0	Clearing condition: After reading CMFL = 1, cleared by writing 0 to CMFL	(initial value)
1	Setting condition: Set when the TCFL value matches the OCRFL value	

Bit 1—Timer Overflow Interrupt Enable L (OVIEL)

Bit 1 selects enabling or disabling of interrupt generation when TCFL overflows.

Bit 1 OVIEL	Description	
0	TCFL overflow interrupt request is disabled	(initial value)
1	TCFL overflow interrupt request is enabled	

Bit 0—Counter Clear L (CCLRL)

Bit 0 selects whether TCFL is cleared when TCFL and OCRFL match.

Bit 0 CCLRL	Description	
0	TCFL clearing by compare match is disabled	(initial value)
1	TCFL clearing by compare match is enabled	

Clock Stop Register 1 (CKSTPR1)

Bit:	7	6	5	4	3	2	1	0
	—	—	S32CKSTP	ADCKSTP	TGCKSTP	TFCKSTP	TCCKSTP	TACKSTP
Initial value:	1	1	1	1	1	1	1	1
Read/Write:	—	—	R/W	R/W	R/W	R/W	R/W	R/W

CKSTPR1 is an 8-bit read/write register that performs module standby mode control for peripheral modules. Only the bit relating to timer F is described here. For details of the other bits, see the sections on the relevant modules.

Bit 2—Timer F Module Standby Mode Control (TFCKSTP)

Bit 2 controls setting and clearing of module standby mode for timer F.

TFCKSTP	Description	
0	Timer F is set to module standby mode	
1	Timer F module standby mode is cleared	(initial value)

9.4.3 CPU Interface

TCF and OCRF are 16-bit read/write registers, but the CPU is connected to the on-chip peripheral modules by an 8-bit data bus. When the CPU accesses these registers, it therefore uses an 8-bit temporary register (TEMP).

When performing TCF read/write access or OCRF write access in 16-bit mode, data will not be transferred correctly if only the upper byte or only the lower byte is accessed. Access must be performed for all 16 bits (using two consecutive byte-size MOV instructions), and the upper byte must be accessed before the lower byte.

In 8-bit mode, there are no restrictions on the order of access.

Write Access

Write access to the upper byte results in transfer of the upper-byte write data to TEMP. Next, write access to the lower byte results in transfer of the data in TEMP to the upper register byte, and direct transfer of the lower-byte write data to the lower register byte.

Figure 9.4 shows an example in which H'AA55 is written to TCF.

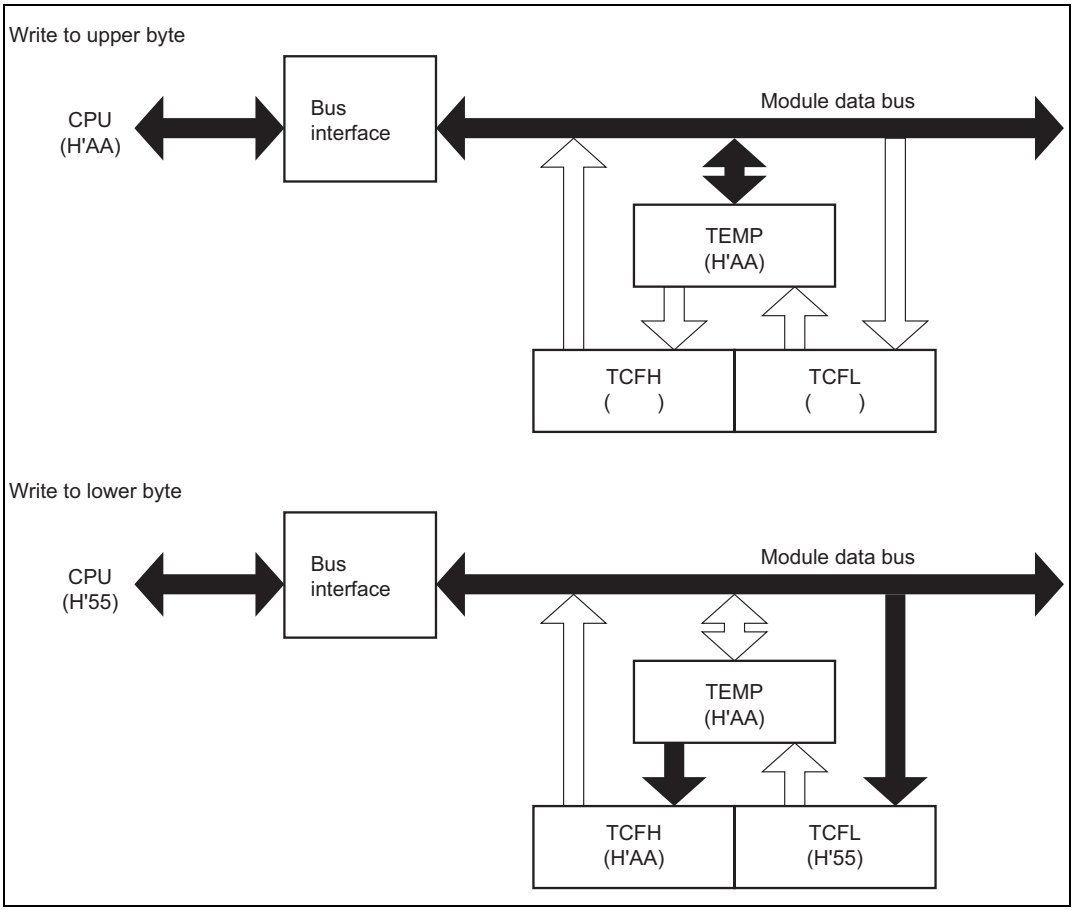

Figure 9.4 Write Access to TCF (CPU → TCF)

Read Access

In access to TCF, when the upper byte is read the upper-byte data is transferred directly to the CPU and the lower-byte data is transferred to TEMP. Next, when the lower byte is read, the lower-byte data in TEMP is transferred to the CPU.

In access to OCRF, when the upper byte is read the upper-byte data is transferred directly to the CPU. When the lower byte is read, the lower-byte data is transferred directly to the CPU.

Figure 9.5 shows an example in which TCF is read when it contains H'AAFF.

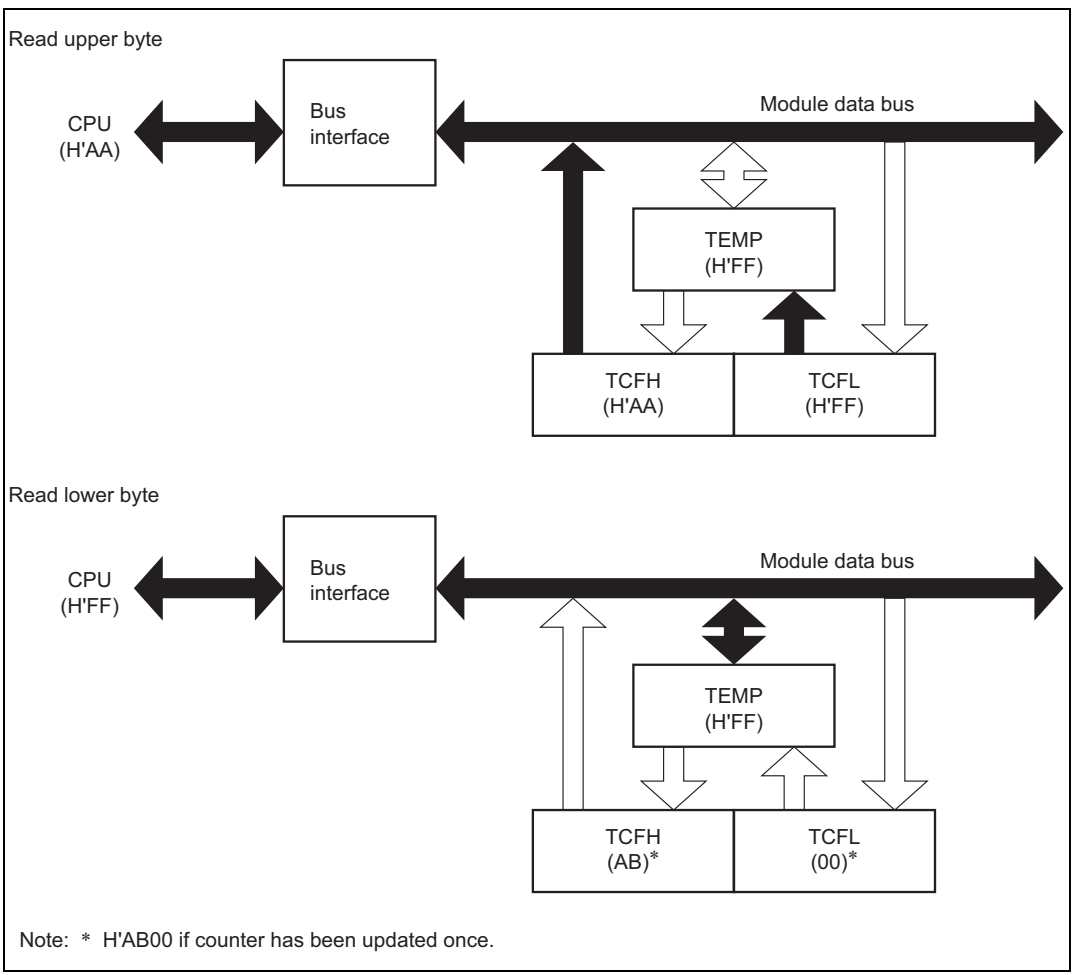

Figure 9.5 Read Access to TCF (TCF → CPU)

9.4.4 Operation

Timer F is a 16-bit counter that increments on each input clock pulse. The timer F value is constantly compared with the value set in output compare register F, and the counter can be cleared, an interrupt requested, or port output toggled, when the two values match. Timer F can also function as two independent 8-bit timers.

Timer F Operation

Timer F has two operating modes, 16-bit timer mode and 8-bit timer mode. The operation in each of these modes is described below.

a. Operation in 16-bit timer mode

When CKSH2 is cleared to 0 in timer control register F (TCRF), timer F operates as a 16-bit timer.

Following a reset, timer counter F (TCF) is initialized to H'0000, output compare register F (OCRF) to H'FFFF, and timer control register F (TCRF) and timer control/status register F (TCSRF) to H'00. The counter starts incrementing on external event (TMIF) input. The external event edge selection is set by IEG3 in the IRQ edge select register (IEGR).

The timer F operating clock can be selected from three internal clocks output by prescaler S or an external clock by means of bits CKSL2 to CKSL0 in TCRF.

OCRF contents are constantly compared with TCF, and when both values match, CMFH is set to 1 in TCSRF. If IENTFH in IENR2 is 1 at this time, an interrupt request is sent to the CPU, and at the same time, TMOFH pin output is toggled. If CCLRH in TCSRF is 1, TCF is cleared. TMOFH pin output can also be set by TOLH in TCRF.

When TCF overflows from H'FFFF to H'0000, OVFH is set to 1 in TCSRF. If OVIEH in TCSRF and IENTFH in IENR2 are both 1, an interrupt request is sent to the CPU.

b. Operation in 8-bit timer mode

When CKSH2 is set to 1 in TCRF, TCF operates as two independent 8-bit timers, TCFH and TCFL. The TCFH/TCFL input clock is selected by CKSH2 to CKSH0/CKSL2 to CKSL0 in TCRF.

When the OCRFH/OCRFL and TCFH/TCFL values match, CMFH/CMFL is set to 1 in TCSRF. If IENTFH/IENTFL in IENR2 is 1, an interrupt request is sent to the CPU, and at the same time, TMOFH pin/TMOFL pin output is toggled. If CCLRH/CCLRL in TCSRF is 1, TCFH/TCFL is cleared. TMOFH pin/TMOFL pin output can also be set by TOLH/TOLL in TCRF.

When TCFH/TCFL overflows from H'FF to H'00, OVFH/OVFL is set to 1 in TCSRF. If OVIEH/OVIEL in TCSRF and IENTFH/IENTFL in IENR2 are both 1, an interrupt request is sent to the CPU.

TCF Increment Timing

TCF is incremented by clock input (internal clock or external event input).

a. Internal clock operation

Bits CKSH2 to CKSH0 or CKSL2 to CKSL0 in TCRF select one of four internal clock sources (ϕ/32, ϕ/16, ϕ/4, or ϕw/4) created by dividing the system clock (ϕ or ϕw).

b. External event operation

External event input is selected by clearing CKSL2 to 0 in TCRF. TCF can increment on either the rising or falling edge of external event input. External event edge selection is set by IEG3 in the interrupt controller's IEGR register. An external event pulse width of at least 2 system clocks (ϕ) is necessary. Shorter pulses will not be counted correctly.

TMOFH/TMOFL Output Timing

In TMOFH/TMOFL output, the value set in TOLH/TOLL in TCRF is output. The output is toggled by the occurrence of a compare match. Figure 9.6 shows the output timing.

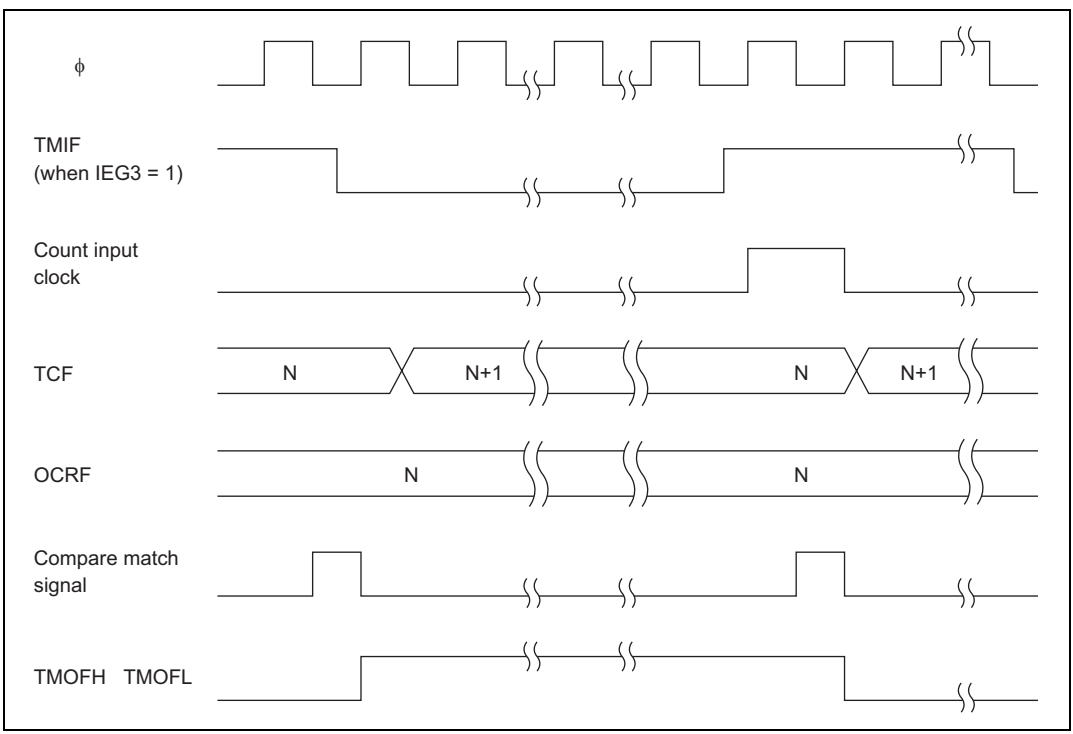

Figure 9.6 TMOFH/TMOFL Output Timing

TCF Clear Timing

TCF can be cleared by a compare match with OCRF.

Timer Overflow Flag (OVF) Set Timing

OVF is set to 1 when TCF overflows from H'FFFF to H'0000.

Compare Match Flag Set Timing

The compare match flag (CMFH or CMFL) is set to 1 when the TCF and OCRF values match. The compare match signal is generated in the last state during which the values match (when TCF is updated from the matching value to a new value). When TCF matches OCRF, the compare match signal is not generated until the next counter clock.

Timer F Operation Modes

Timer F operation modes are shown in table 9.9.

Table 9.9 Timer F Operation Modes

Operation Mode	Reset	Active	Sleep	Watch	Sub-active	Sub-sleep	Standby	Module Standby
TCF	Reset	Functions	Functions	Functions/ Halted*	Functions/ Halted*	Functions/ Halted*	Halted	Halted
OCRF	Reset	Functions	Held	Held	Functions	Held	Held	Held
TCRF	Reset	Functions	Held	Held	Functions	Held	Held	Held
TCSRF	Reset	Functions	Held	Held	Functions	Held	Held	Held

Note: * When $\phi_W/4$ is selected as the TCF internal clock in active mode or sleep mode, since the system clock and internal clock are mutually asynchronous, synchronization is maintained by a synchronization circuit. This results in a maximum count cycle error of $1/\phi$ (s). When the counter is operated in subactive mode, watch mode, or subsleep mode, $\phi_W/4$ must be selected as the internal clock. The counter will not operate if any other internal clock is selected.

9.4.5 Application Notes

The following types of contention and operation can occur when timer F is used.

16-bit Timer Mode

In toggle output, TMOFH pin output is toggled when all 16 bits match and a compare match signal is generated. If a TCRF write by a MOV instruction and generation of the compare match signal occur simultaneously, TOLH data is output to the TMOFH pin as a result of the TCRF write. TMOFL pin output is unstable in 16-bit mode, and should not be used; the TMOFL pin should be used as a port pin.

If an OCRFL write and compare match signal generation occur simultaneously, the compare match signal is invalid. However, if the written data and the counter value match, a compare match signal will be generated at that point. As the compare match signal is output in synchronization with the TCFL clock, a compare match will not result in compare match signal generation if the clock is stopped.

Compare match flag CMFH is set when all 16 bits match and a compare match signal is generated. Compare match flag CMFL is set if the setting conditions for the lower 8 bits are satisfied.

When TCF overflows, OVFH is set. OVFL is set if the setting conditions are satisfied when the lower 8 bits overflow. If a TCFL write and overflow signal output occur simultaneously, the overflow signal is not output.

8-bit Timer Mode

a. TCFH, OCRFH

   In toggle output, TMOFH pin output is toggled when a compare match occurs. If a TCRF write by a MOV instruction and generation of the compare match signal occur simultaneously, TOLH data is output to the TMOFH pin as a result of the TCRF write.

   If an OCRFH write and compare match signal generation occur simultaneously, the compare match signal is invalid. However, if the written data and the counter value match, a compare match signal will be generated at that point. The compare match signal is output in synchronization with the TCFH clock.

   If a TCFH write and overflow signal output occur simultaneously, the overflow signal is not output.

b. TCFL, OCRFL

In toggle output, TMOFL pin output is toggled when a compare match occurs. If a TCRF write by a MOV instruction and generation of the compare match signal occur simultaneously, TOLL data is output to the TMOFL pin as a result of the TCRF write.

If an OCRFL write and compare match signal generation occur simultaneously, the compare match signal is invalid. However, if the written data and the counter value match, a compare match signal will be generated at that point. As the compare match signal is output in synchronization with the TCFL clock, a compare match will not result in compare match signal generation if the clock is stopped.

If a TCFL write and overflow signal output occur simultaneously, the overflow signal is not output.

Clear Timer FH, Timer FL Interrupt Request Flags (IRRTFH, IRRTFL), Timer Overflow Flags H, L (OVFH, OVFL) and Compare Match Flags H, L (CMFH, CMFL)

When ϕw/4 is selected as the internal clock, “Interrupt factor generation signal” will be operated with ϕw and the signal will be outputted with ϕw width. And, “Overflow signal” and “Compare match signal” are controlled with 2 cycles of ϕw signals. Those signals are outputted with 2 cycles width of ϕw (figure 9.7)

In active (high-speed, medium-speed) mode, even if you cleared interrupt request flag during the term of validity of “Interrupt factor generation signal”, same interrupt request flag is set. (figure 9.7 (1)) And, you cannot be cleared timer overflow flag and compare match flag during the term of validity of “Overflow signal” and “Compare match signal”.

For interrupt request flag is set right after interrupt request is cleared, interrupt process to one time timer FH, timer FL interrupt might be repeated. (figure 9.7 (2)) Therefore, to definitely clear interrupt request flag in active (high-speed, medium-speed) mode, clear should be processed after the time that calculated with below (1) formula. And, to definitely clear timer overflow flag and compare match flag, clear should be processed after read timer control status register F (TCSRF) after the time that calculated with below (1) formula. For ST of (1) formula, please substitute the longest number of execution states in used instruction. (10 states of RTE instruction when MULXU, DIVXU instruction is not used, 14 states when MULXU, DIVXU instruction is used) In subactive mode, there are not limitation for interrupt request flag, timer overflow flag, and compare match flag clear.

The term of validity of “Interrupt factor generation signal”

= 1 cycle of ϕw + waiting time for completion of executing instruction
+ interrupt time synchronized with ϕ = $1/\phi w + ST \times (1/\phi) + (2/\phi)$ (second).....(1)

ST: Executing number of execution states

Method 1 is recommended to operate for time efficiency.

Method 1

1. Prohibit interrupt in interrupt handling routine (set IENFH, IENFL to 0).
2. After program process returned normal handling, clear interrupt request flags (IRRTFH, IRRTFL) after more than that calculated with (1) formula.
3. After read timer control status register F (TCSRF), clear timer overflow flags (OVFH, OVFL) and compare match flags (CMFH, CMFL).
4. Operate interrupt permission (set IENFH, IENFL to 1).

Method 2

1. Set interrupt handling routine time to more than time that calculated with (1) formula.
2. Clear interrupt request flags (IRRTFH, IRRTFL) at the end of interrupt handling routine.
3. After read timer control status register F (TCSRF), clear timer overflow flags (OVFH, OVFL) and compare match flags (CMFH, CMFL).

All above attentions are also applied in 16-bit mode and 8-bit mode.

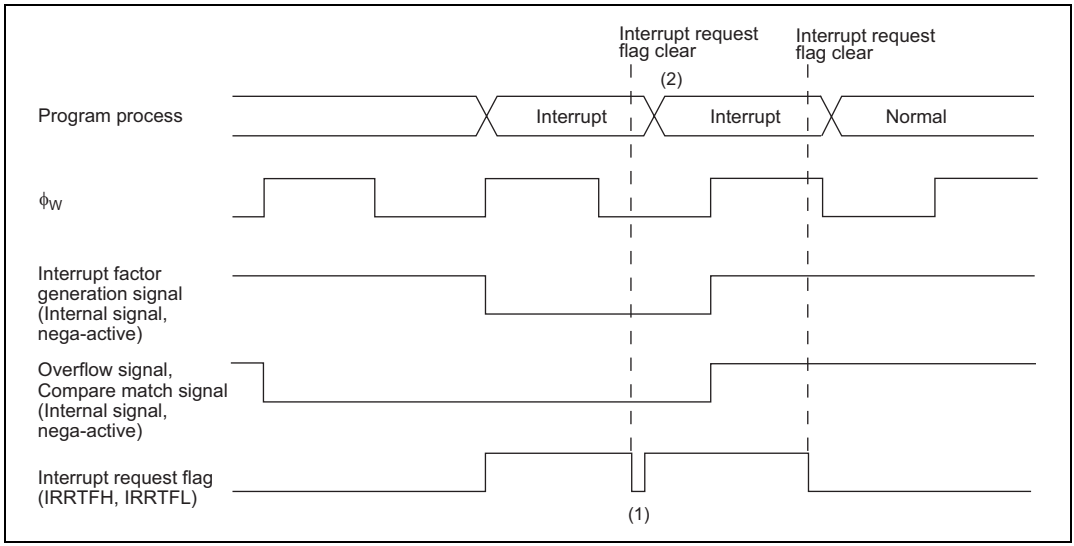

Figure 9.7 Clear Interrupt Request Flag when Interrupt Factor Generation Signal is Valid

Timer Counter (TCF) Read/Write

When ϕw/4 is selected as the internal clock in active (high-speed, medium-speed) mode, write on TCF is impossible. And, when read TCF, as the system clock and internal clock are mutually asynchronous, TCF synchronizes with synchronization circuit. This results in a maximum TCF read value error of ±1.

When read/write TCF in active (high-speed, medium-speed) mode is needed, please select internal clock except for ϕw/4 before read/write.

In subactive mode, even ϕw/4 is selected as the internal clock, normal read/write TCF is possible.

9.5 Timer G

9.5.1 Overview

Timer G is an 8-bit timer with dedicated input capture functions for the rising/falling edges of pulses input from the input capture input pin (input capture input signal). High-frequency component noise in the input capture input signal can be eliminated by a noise canceler, enabling accurate measurement of the input capture input signal duty cycle. If input capture input is not set, timer G functions as an 8-bit interval timer.

Features

Features of timer G are given below.

- Choice of four internal clock sources (ϕ/64, ϕ/32, ϕ/2, ϕw/4)
- Dedicated input capture functions for rising and falling edges
- Level detection at counter overflow

  It is possible to detect whether overflow occurred when the input capture input signal was high or when it was low.
- Selection of whether or not the counter value is to be cleared at the input capture input signal rising edge, falling edge, or both edges
- Two interrupt sources: one input capture, one overflow. The input capture input signal rising or falling edge can be selected as the interrupt source.
- A built-in noise canceler eliminates high-frequency component noise in the input capture input signal.
- Watch mode, subactive mode, or subsleep mode operation is possible when ϕw/4 is selected as the internal clock.
- Use of module standby mode enables this module to be placed in standby mode independently when not used.

Block Diagram

Figure 9.8 shows a block diagram of timer G.

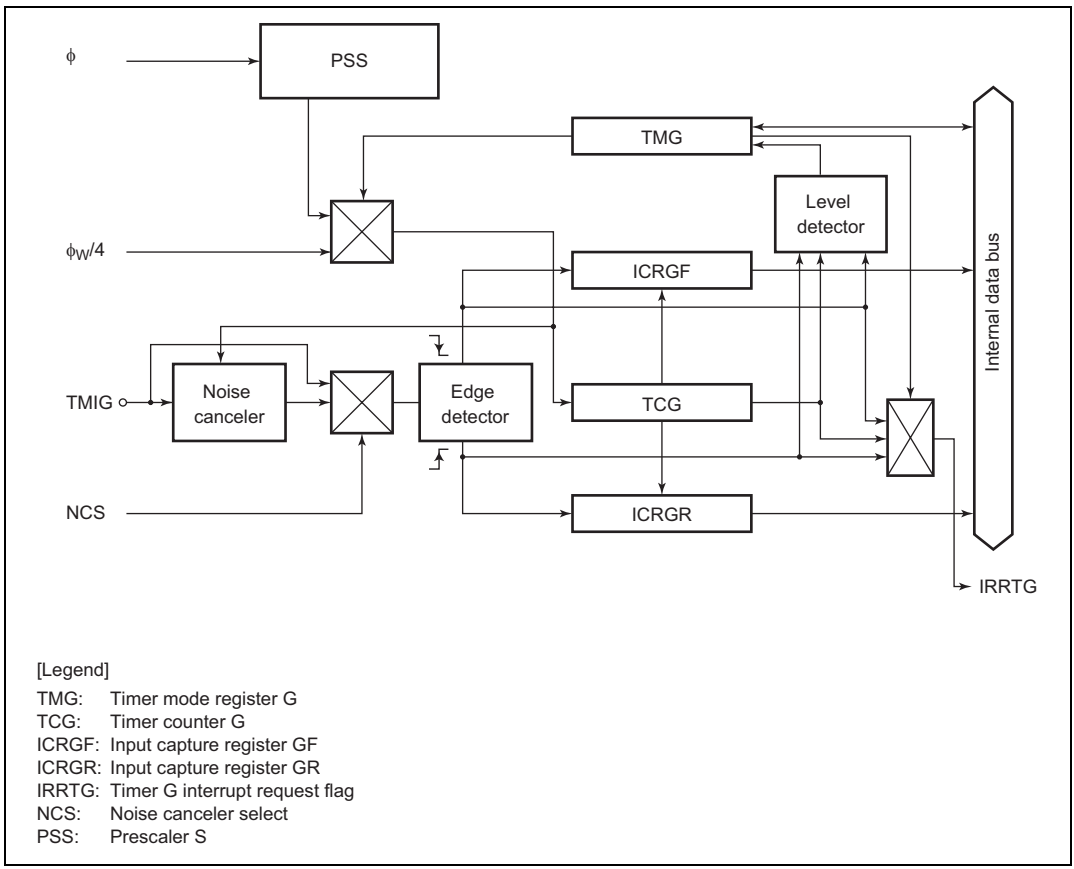

Figure 9.8 Block Diagram of Timer G

Pin Configuration

Table 9.10 shows the timer G pin configuration.

Table 9.10 Pin Configuration

Name	Abbr.	I/O	Function
Input capture input	TMIG	Input	Input capture input pin

Register Configuration

Table 9.11 shows the register configuration of timer G.

Table 9.11 Timer G Registers

Name	Abbr.	R/W	Initial Value	Address
Timer control register G	TMG	R/W	H'00	H'FFBC
Timer counter G	TCG	—	H'00	—
Input capture register GF	ICRGF	R	H'00	H'FFBD
Input capture register GR	ICRGR	R	H'00	H'FFBE
Clock stop register 1	CKSTPR1	R/W	H'FF	H'FFFA

9.5.2 Register Descriptions

Timer Counter G (TCG)

Bit:	7	6	5	4	3	2	1	0
	TCG7	TCG6	TCG5	TCG4	TCG3	TCG2	TCG1	TCG0
Initial value:	0	0	0	0	0	0	0	0
Read/Write:	—	—	—	—	—	—	—	—

TCG is an 8-bit up-counter which is incremented by clock input. The input clock is selected by bits CKS1 and CKS0 in TMG.

TMIG in PMR1 is set to 1 to operate TCG as an input capture timer, or cleared to 0 to operate TCG as an interval timer*. In input capture timer operation, the TCG value can be cleared by the rising edge, falling edge, or both edges of the input capture input signal, according to the setting made in TMG.

When TCG overflows from H'FF to H'00, if OVIE in TMG is 1, IRRTG in IRR2 is set to 1, and if IENTG in IENR2 is 1, an interrupt request is sent to the CPU.

For details of the interrupt, see section 3.3, Interrupts.

TCG cannot be read or written by the CPU. It is initialized to H'00 upon reset.

Note: * An input capture signal may be generated when TMIG is modified.

Input Capture Register GF (ICRGF)

Bit:	7	6	5	4	3	2	1	0
	ICRGF7	ICRGF6	ICRGF5	ICRGF4	ICRGF3	ICRGF2	ICRGF1	ICRGF0
Initial value:	0	0	0	0	0	0	0	0
Read/Write:	R	R	R	R	R	R	R	R

ICRGF is an 8-bit read-only register. When a falling edge of the input capture input signal is detected, the current TCG value is transferred to ICRGF. If IIEGS in TMG is 1 at this time, IRRTG in IRR2 is set to 1, and if IENTG in IENR2 is 1, an interrupt request is sent to the CPU.

For details of the interrupt, see section 3.3, Interrupts.

To ensure dependable input capture operation, the pulse width of the input capture input signal must be at least 2ϕ or $2\phi_{SUB}$ (when the noise canceler is not used).

ICRGF is initialized to H'00 upon reset.

Input Capture Register GR (ICRGR)

Bit:	7	6	5	4	3	2	1	0
	ICRGR7	ICRGR6	ICRGR5	ICRGR4	ICRGR3	ICRGR2	ICRGR1	ICRGR0
Initial value:	0	0	0	0	0	0	0	0
Read/Write:	R	R	R	R	R	R	R	R

ICRGR is an 8-bit read-only register. When a rising edge of the input capture input signal is detected, the current TCG value is transferred to ICRGR. If IIEGS in TMG is 0 at this time, IRRTG in IRR2 is set to 1, and if IENTG in IENR2 is 1, an interrupt request is sent to the CPU.

For details of the interrupt, see section 3.3, Interrupts.

To ensure dependable input capture operation, the pulse width of the input capture input signal must be at least 2ϕ or $2\phi_{SUB}$ (when the noise canceler is not used).

ICRGR is initialized to H'00 upon reset.

Timer Mode Register G (TMG)

Bit:	7	6	5	4	3	2	1	0
	OVFH	OVFL	OVIE	IIEGS	CCLR1	CCLR0	CKS1	CKS0
Initial value:	0	0	0	0	0	0	0	0
Read/Write:	R/(W)*	R/(W)*	R/W	R/W	R/W	R/W	R/W	R/W

Note: * Bits 7 and 6 can only be written with 0, for flag clearing.

TMG is an 8-bit read/write register that performs TCG clock selection from four internal clock sources, counter clear selection, and edge selection for the input capture input signal interrupt request, controls enabling of overflow interrupt requests, and also contains the overflow flags.

TMG is initialized to H'00 upon reset.

Bit 7—Timer Overflow Flag H (OVFH)

Bit 7 is a status flag indicating that TCG has overflowed from H'FF to H'00 when the input capture input signal is high. This flag is set by hardware and cleared by software. It cannot be set by software.

Bit 7 OVFH	Description
0	Clearing condition: After reading OVFH = 1, cleared by writing 0 to OVFH (initial value)
1	Setting condition: Set when input capture input signal is high level and TCG overflows from H'FF to H'00

Bit 6—Timer Overflow Flag L (OVFL)

Bit 6 is a status flag indicating that TCG has overflowed from H'FF to H'00 when the input capture input signal is low, or in interval operation. This flag is set by hardware and cleared by software. It cannot be set by software.

Bit 6 OVFL	Description
0	Clearing condition: After reading OVFL = 1, cleared by writing 0 to OVFL (initial value)
1	Setting condition: Set when TCG overflows from H'FF to H'00 while input capture input signal is high level or during interval operation

Bit 5—Timer Overflow Interrupt Enable (OVIE)

Bit 5 selects enabling or disabling of interrupt generation when TCG overflows.

Bit 5 OVIE	Description	
0	TCG overflow interrupt request is disabled	(initial value)
1	TCG overflow interrupt request is enabled	

Bit 4—Input Capture Interrupt Edge Select (IIEGS)

Bit 4 selects the input capture input signal edge that generates an interrupt request.

Bit 4 IIEGS	Description	
0	Interrupt generated on rising edge of input capture input signal	(initial value)
1	Interrupt generated on falling edge of input capture input signal	

Bits 3 and 2—Counter Clear 1 and 0 (CCLR1, CCLR0)

Bits 3 and 2 specify whether or not TCG is cleared by the rising edge, falling edge, or both edges of the input capture input signal.

Bit 3 CCLR1	Bit 2 CCLR0	Description	
0	0	TCG clearing is disabled	(initial value)
0	1	TCG cleared by falling edge of input capture input signal	
1	0	TCG cleared by rising edge of input capture input signal	
1	1	TCG cleared by both edges of input capture input signal	

Bits 1 and 0—Clock Select (CKS1, CKS0)

Bits 1 and 0 select the clock input to TCG from among four internal clock sources.

Bit 1 CKS1	Bit 0 CKS0	Description	
0	0	Internal clock: counting on ϕ/64	(initial value)
0	1	Internal clock: counting on ϕ/32	
1	0	Internal clock: counting on ϕ/2	
1	1	Internal clock: counting on ϕw/4	

Clock Stop Register 1 (CKSTPR1)

Bit:	7	6	5	4	3	2	1	0
	—	—	S32CKSTP	ADCKSTP	TGCKSTP	TFCKSTP	TCCKSTP	TACKSTP
Initial value:	1	1	1	1	1	1	1	1
Read/Write:	—	—	R/W	R/W	R/W	R/W	R/W	R/W

CKSTPR1 is an 8-bit read/write register that performs module standby mode control for peripheral modules. Only the bit relating to timer G is described here. For details of the other bits, see the sections on the relevant modules.

Bit 3—Timer G Module Standby Mode Control (TGCKSTP)

Bit 3 controls setting and clearing of module standby mode for timer G.

TGCKSTP	Description	
0	Timer G is set to module standby mode	
1	Timer G module standby mode is cleared	(initial value)

9.5.3 Noise Canceler

The noise canceler consists of a digital low-pass filter that eliminates high-frequency component noise from the pulses input from the input capture input pin. The noise canceler is set by NCS* in PMR2.

Figure 9.9 shows a block diagram of the noise canceler.

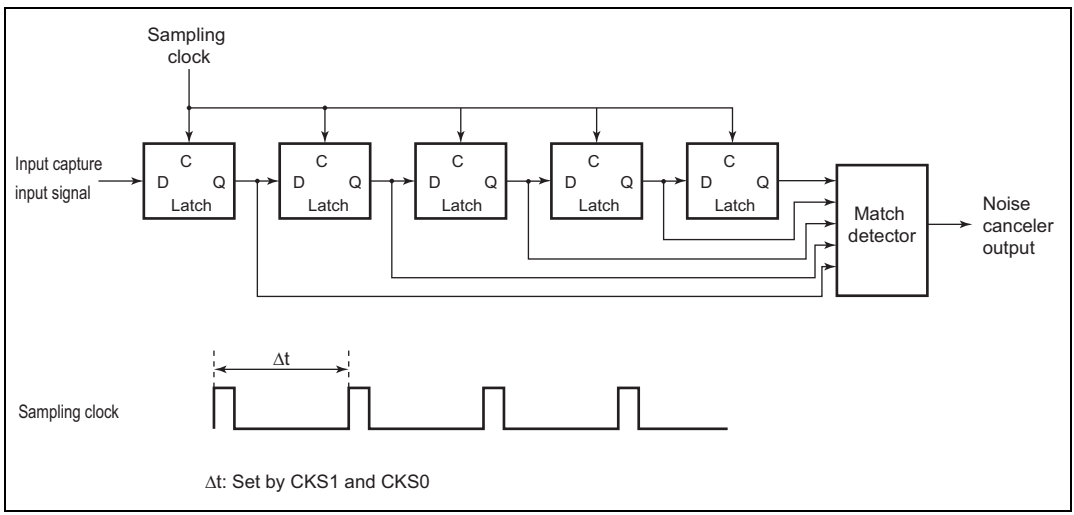

Figure 9.9 Noise Canceler Block Diagram

The noise canceler consists of five latch circuits connected in series and a match detector circuit. When the noise cancellation function is not used (NCS = 0), the system clock is selected as the sampling clock. When the noise cancellation function is used (NCS = 1), the sampling clock is the internal clock selected by CKS1 and CKS0 in TMG, the input capture input is sampled on the rising edge of this clock, and the data is judged to be correct when all the latch outputs match. If all the outputs do not match, the previous value is retained. After a reset, the noise canceler output is initialized when the falling edge of the input capture input signal has been sampled five times. Therefore, after making a setting for use of the noise cancellation function, a pulse with at least five times the width of the sampling clock is a dependable input capture signal. Even if noise cancellation is not used, an input capture input signal pulse width of at least 2ϕ or $2\phi_{SUB}$ is necessary to ensure that input capture operations are performed properly

Note: * An input capture signal may be generated when the NCS bit is modified.

Figure 9.10 shows an example of noise canceler timing.

In this example, high-level input of less than five times the width of the sampling clock at the input capture input pin is eliminated as noise.

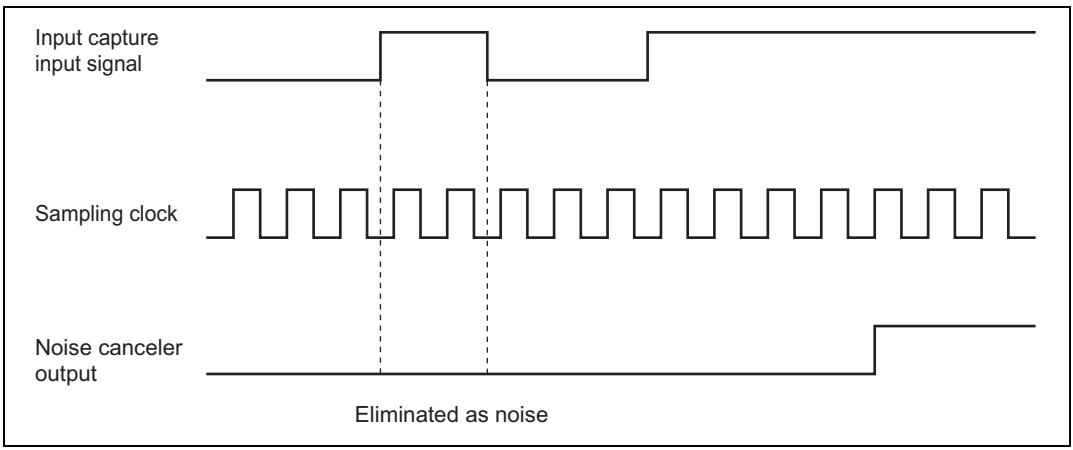

Figure 9.10 Noise Canceler Timing (Example)

9.5.4 Operation

Timer G is an 8-bit timer with built-in input capture and interval functions.

Timer G Functions

Timer G is an 8-bit up-counter with two functions, an input capture timer function and an interval timer function.

The operation of these two functions is described below.

a. Input capture timer operation

When the TMIG bit in port mode register 1 (PMR1) is set to 1, timer G functions as an input capture timer*.

In a reset, timer mode register G (TMG), timer counter G (TCG), input capture register GF (ICRGF), and input capture register GR (ICRGR) are all initialized to H'00.

Following a reset, TCG starts counting on the ϕ/64 internal clock.

The input clock can be selected from four internal clock sources by bits CKS1 and CKS0 in TMG.

When a rising edge/falling edge is detected in the input capture signal input from the TMIG pin, the TCG value at that time is transferred to ICRGR/ICRGF. When the edge selected by IIEGS in TMG is input, IRRTG in IRR2 is set to 1, and if the IENTG bit in IENR2 is 1 at this time, an interrupt request is sent to the CPU. For details of the interrupt, see section 3.3, Interrupts.

TCG can be cleared by a rising edge, falling edge, or both edges of the input capture signal, according to the setting of bits CCLR1 and CCLR0 in TMG. If TCG overflows when the input capture signal is high, the OVFH bit in TMG is set; if TCG overflows when the input capture signal is low, the OVFL bit in TMG is set. If the OVIE bit in TMG is 1 when these bits are set, IRRTG in IRR2 is set to 1, and if the IENTG bit in IENR2 is 1, timer G sends an interrupt request to the CPU. For details of the interrupt, see section 3.3, Interrupts.

Timer G has a built-in noise canceler that enables high-frequency component noise to be eliminated from pulses input from the TMIG pin. For details, see section 9.5.3, Noise Canceler.

Note: * An input capture signal may be generated when TMIG is modified.

b. Interval timer operation

When the TMIG bit in PMR1 is cleared to 0, timer G functions as an interval timer.

Following a reset, TCG starts counting on the ϕ/64 internal clock. The input clock can be selected from four internal clock sources by bits CKS1 and CKS0 in TMG. TCG increments on the selected clock, and when it overflows from H'FF to H'00, the OVFL bit in TMG is set to 1. If the OVIE bit in TMG is 1 at this time, IRRTG in IRR2 is set to 1, and if the IENTG bit in IENR2 is 1, timer G sends an interrupt request to the CPU. For details of the interrupt, see section 3.3, Interrupts.

Count Timing

TCG is incremented by internal clock input. Bits CKS1 and CKS0 in TMG select one of four internal clock sources (ϕ/64, ϕ/32, ϕ/2, or ϕw/4) created by dividing the system clock (ϕ) or watch clock (ϕw).

Input Capture Input Timing

a. Without noise cancellation function

For input capture input, dedicated input capture functions are provided for rising and falling edges.

Figure 9.11 shows the timing for rising/falling edge input capture input.

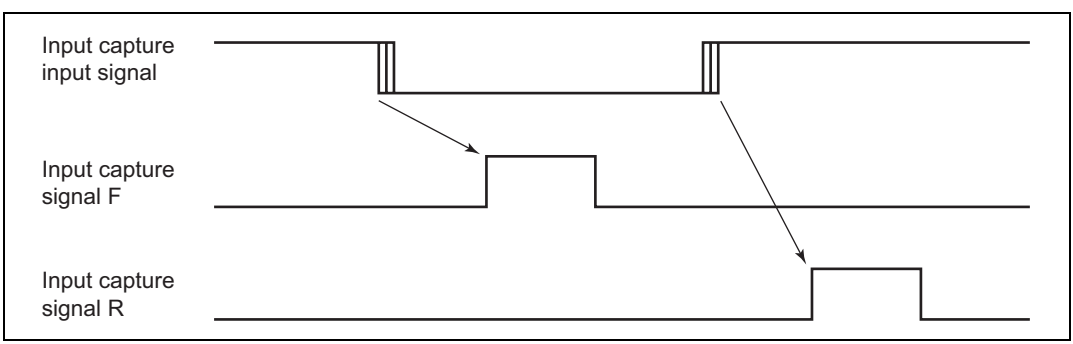

Figure 9.11 Input Capture Input Timing (without Noise Cancellation Function)

b. With noise cancellation function

When noise cancellation is performed on the input capture input, the passage of the input capture signal through the noise canceler results in a delay of five sampling clock cycles from the input capture input signal edge.

Figure 9.12 shows the timing in this case.

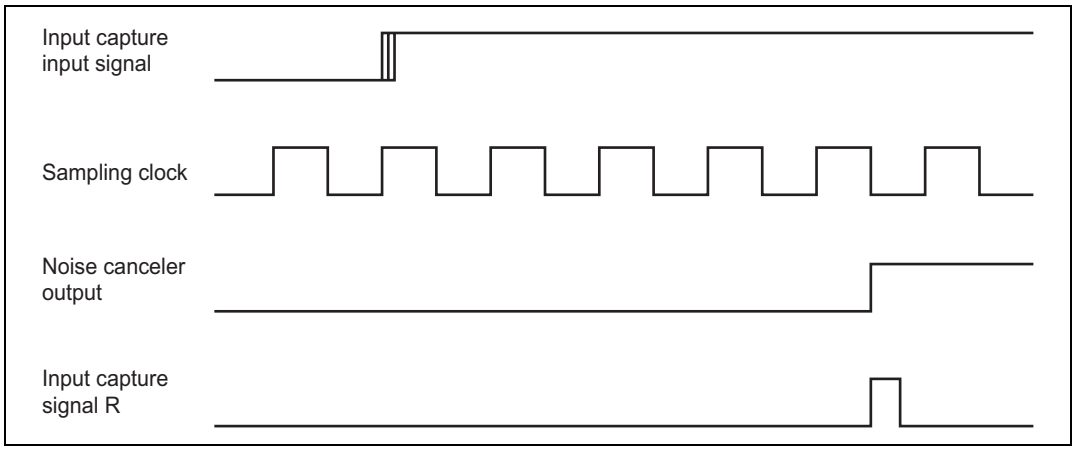

Figure 9.12 Input Capture Input Timing (with Noise Cancellation Function)

Timing of Input Capture by Input Capture Input

Figure 9.13 shows the timing of input capture by input capture input

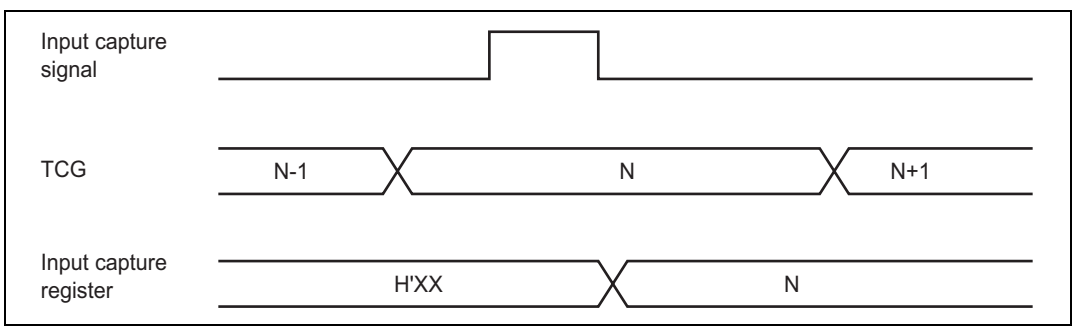

Figure 9.13 Timing of Input Capture by Input Capture Input

TCG Clear Timing

TCG can be cleared by the rising edge, falling edge, or both edges of the input capture input signal.

Figure 9.14 shows the timing for clearing by both edges.

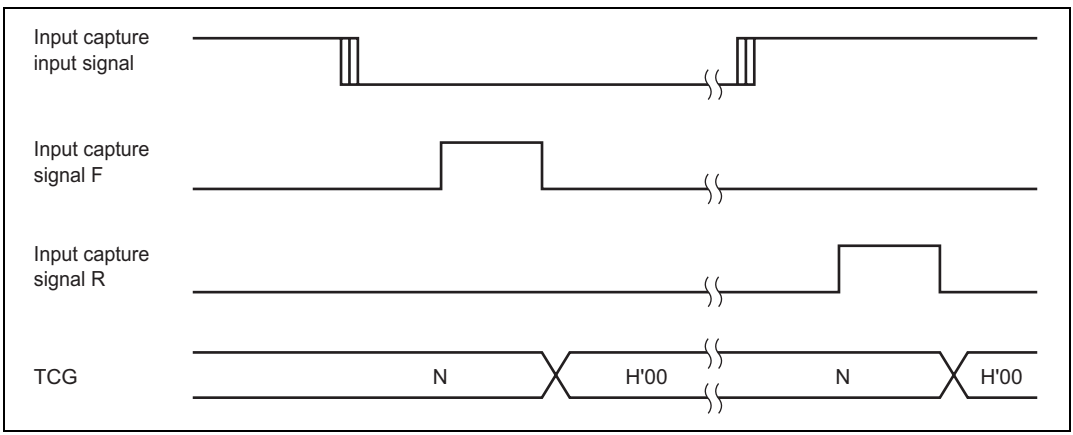

Figure 9.14 TCG Clear Timing

Timer G Operation Modes

Timer G operation modes are shown in table 9.12.

Table 9.12 Timer G Operation Modes

Operation Mode		Reset	Active	Sleep	Watch	Subactive	Subsleep	Standby	Module Standby
TCG	Input capture	Reset	Functions*	Functions*	Functions/ halted*	Functions/ halted*	Functions/ halted*	Halted	Halted
	Interval	Reset	Functions*	Functions*	Functions/ halted*	Functions/ halted*	Functions/ halted*	Halted	Halted
ICRGF		Reset	Functions*	Functions*	Functions/ halted*	Functions/ halted*	Functions/ halted*	Retained	Retained
ICRGR		Reset	Functions*	Functions*	Functions/ halted*	Functions/ halted*	Functions/ halted*	Retained	Retained
TMG		Reset	Functions	Retained	Retained	Functions	Retained	Retained	Retained

Note: * When ϕw/4 is selected as the TCG internal clock in active mode or sleep mode, since the system clock and internal clock are mutually asynchronous, synchronization is maintained by a synchronization circuit. This results in a maximum count cycle error of 1/ϕ(s). When ϕw/4 is selected as the TCG internal clock in watch mode, TCG and the noise canceler operate on the ϕw/4 internal clock without regard to the ϕ_{SUB} subclock (ϕw/8, ϕw/4, ϕw/2). Note that when another internal clock is selected, TCG and the noise canceler do not operate, and input of the input capture input signal does not result in input capture.

To operate the timer G in subactive mode or subsleep mode, select ϕw/4 as the TCG internal clock and ϕw/2 as the subclock ϕ_{SUB}. Note that when other internal clock is selected, or when ϕw/8 or ϕw/4 is selected as the subclock ϕ_{SUB}, TCG and the noise canceler do not operate.

9.5.5 Application Notes

Internal Clock Switching and TCG Operation

Depending on the timing, TCG may be incremented by a switch between different internal clock sources. Table 9.13 shows the relation between internal clock switchover timing (by write to bits CKS1 and CKS0) and TCG operation.

When TCG is internally clocked, an increment pulse is generated on detection of the falling edge of an internal clock signal, which is divided from the system clock (ϕ) or subclock (ϕw). For this reason, in a case like No. 3 in table 9.13 where the switch is from a high clock signal to a low clock signal, the switchover is seen as a falling edge, causing TCG to increment.

Table 9.13 Internal Clock Switching and TCG Operation

No.	Clock Levels Before and After Modifying Bits CKS1 and CKS0	TCG Operation
1	Goes from low level to low level	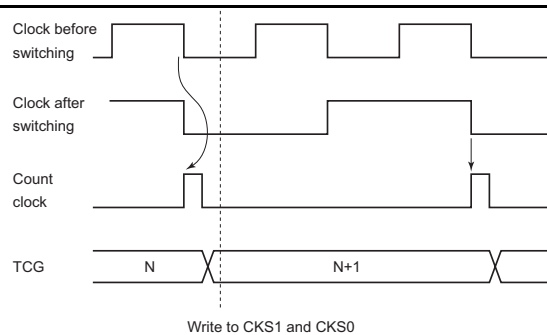
2	Goes from low level to high level	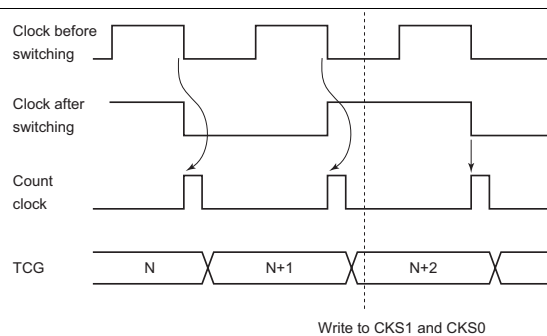

No.	Clock Levels Before and After Modifying Bits CKS1 and CKS0	TCG Operation
3	Goes from high level to low level	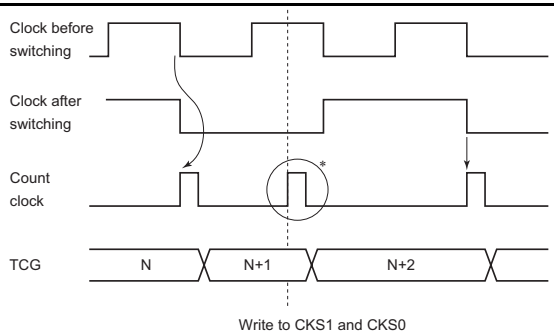
4	Goes from high level to high level	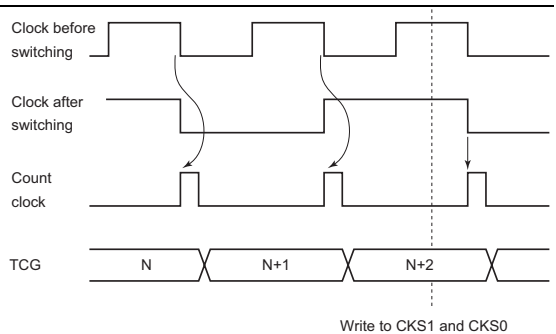

Note: * The switchover is seen as a falling edge, and TCG is incremented.

Notes on Port Mode Register Modification

The following points should be noted when a port mode register is modified to switch the input capture function or the input capture input noise canceler function.

- Switching input capture input pin function

  Note that when the pin function is switched by modifying TMIG in port mode register 1 (PMR1), which performs input capture input pin control, an edge will be regarded as having been input at the pin even though no valid edge has actually been input. Input capture input signal input edges, and the conditions for their occurrence, are summarized in table 9.14.

Table 9.14 Input Capture Input Signal Input Edges Due to Input Capture Input Pin Switching, and Conditions for Their Occurrence

Input Capture Input Signal Input Edge	Conditions
Generation of rising edge	When TMIG is modified from 0 to 1 while the TMIG pin is high
	When NCS is modified from 0 to 1 while the TMIG pin is high, then TMIG is modified from 0 to 1 before the signal is sampled five times by the noise canceler
Generation of falling edge	When TMIG is modified from 1 to 0 while the TMIG pin is high
	When NCS is modified from 0 to 1 while the TMIG pin is low, then TMIG is modified from 0 to 1 before the signal is sampled five times by the noise canceler
	When NCS is modified from 0 to 1 while the TMIG pin is high, then TMIG is modified from 1 to 0 after the signal is sampled five times by the noise canceler

Note: When the $P1_3$ pin is not set as an input capture input pin, the timer G input capture input signal is low.

- Switching input capture input noise canceler function

  When performing noise canceler function switching by modifying NCS in port mode register 2 (PMR2), which controls the input capture input noise canceler, TMIG should first be cleared to 0. Note that if NCS is modified without first clearing TMIG, an edge will be regarded as having been input at the pin even though no valid edge has actually been input. Input capture input signal input edges, and the conditions for their occurrence, are summarized in table 9.15.

Table 9.15 Input Capture Input Signal Input Edges Due to Noise Canceler Function Switching, and Conditions for Their Occurrence

Input Capture Input Signal Input Edge	Conditions
Generation of rising edge	When the TMIG pin is modified from 0 to 1 while TMIG is 1, then NCS is modified from 0 to 1 before the signal is sampled five times by the noise canceler
Generation of falling edge	When the TMIG pin is modified from 1 to 0 while TMIG is 1, then NCS is modified from 1 to 0 before the signal is sampled five times by the noise canceler

When the pin function is switched and an edge is generated in the input capture input signal, if this edge matches the edge selected by the input capture interrupt select (IIEGS) bit, the interrupt request flag will be set to 1. The interrupt request flag should therefore be cleared to 0 before use. Figure 9.15 shows the procedure for port mode register manipulation and interrupt request flag clearing. When switching the pin function, set the interrupt-disabled state before manipulating the port mode register, then, after the port mode register operation has been performed, wait for the time required to confirm the input capture input signal as an input capture signal (at least two system clocks when the noise canceler is not used; at least five sampling clocks when the noise canceler is used), before clearing the interrupt enable flag to 0. There are two ways of preventing interrupt request flag setting when the pin function is switched: by controlling the pin level so that the conditions shown in tables 9.14 and 9.15 are not satisfied, or by setting the opposite of the generated edge in the IIEGS bit in TMG.

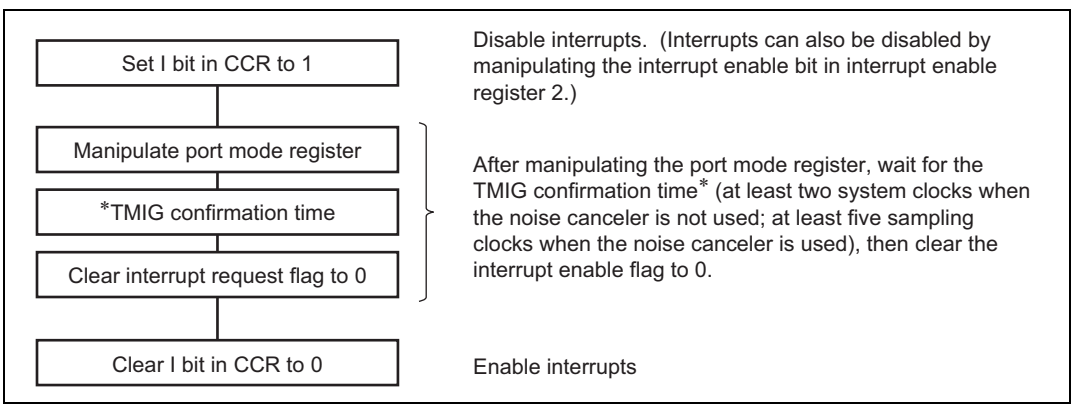

Figure 9.15 Port Mode Register Manipulation and Interrupt Enable Flag Clearing Procedure

9.5.6 Timer G Application Example

Using timer G, it is possible to measure the high and low widths of the input capture input signal as absolute values. For this purpose, CCLR1 and CCLR0 in TMG should both be set to 1.

Figure 9.16 shows an example of the operation in this case.

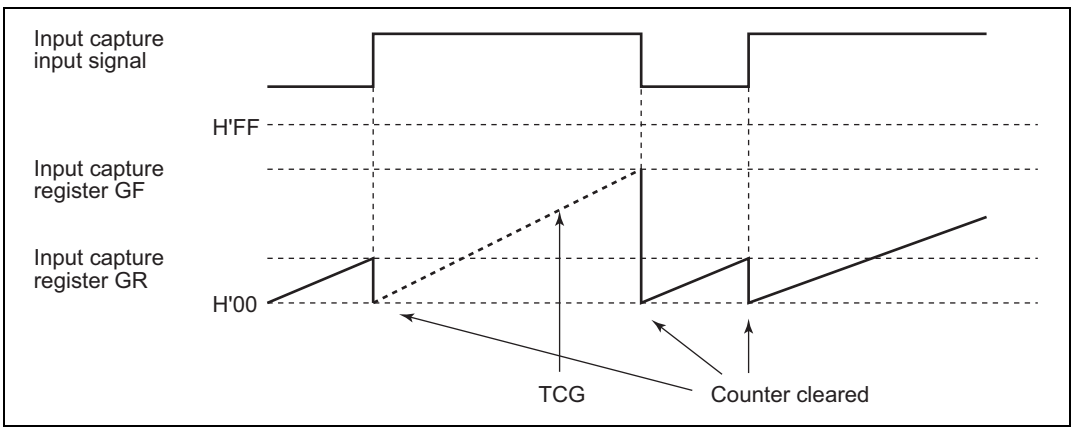

Figure 9.16 Timer G Application Example

9.6 Watchdog Timer

9.6.1 Overview

The watchdog timer has an 8-bit counter that is incremented by an input clock. If a system runaway allows the counter value to overflow before being rewritten, the watchdog timer can reset the chip internally. Note that stabilization times for the H8/38024, H8/38024S, and H8/38024R Group and for the H8/38124 Group are different.

Features

Features of the watchdog timer are given below.

- Incremented by internal clock source (ϕ/8192 or ϕw/32) on the H8/38024, H8/38024S, and H8/38024R Group.
- On the H8/38124 Group, 10 internal clocks (ϕ/64, ϕ/128, ϕ/256, ϕ/512, ϕ/1024, ϕ/2048, ϕ/4096, ϕ/8192, ϕw/32, or watchdog on-chip oscillator) are available for selection for use by the counter.
- A reset signal is generated when the counter overflows. The overflow period can be set from 1 to 256 times the selected clock (from approximately 4 ms to 1,000 ms when ϕ = 2.00 MHz).
- Use of module standby mode enables this module to be placed in standby mode independently when not used. See section 5.9, Module Standby Mode, for details.

Block Diagram

Figures 9.17(1) and 9.17(2) show a block diagram of the watchdog timer.

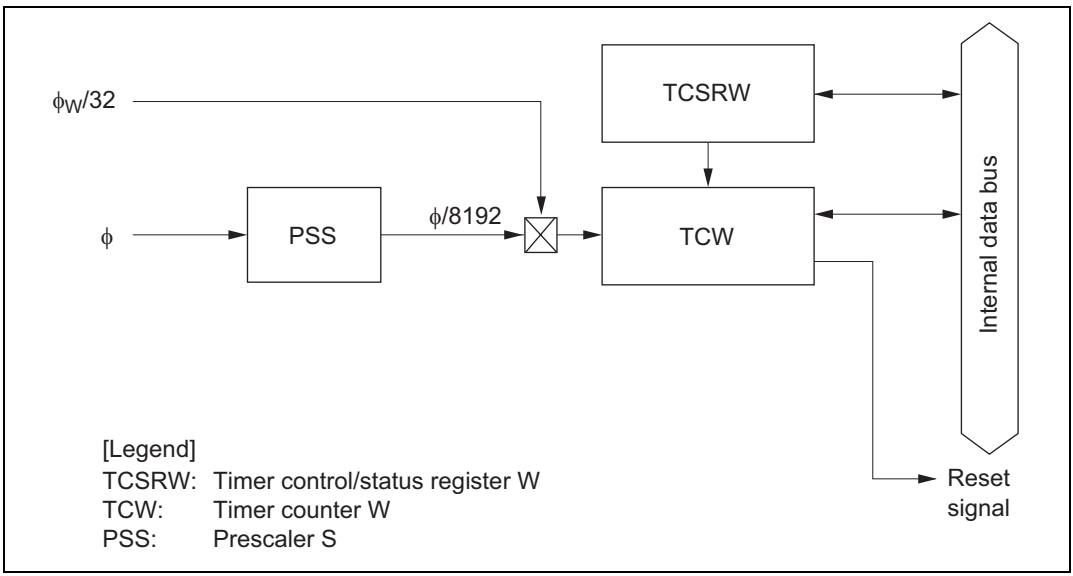

Figure 9.17(1) Block Diagram of Watchdog Timer (H8/38024, H8/38024S, H8/38024R Group)

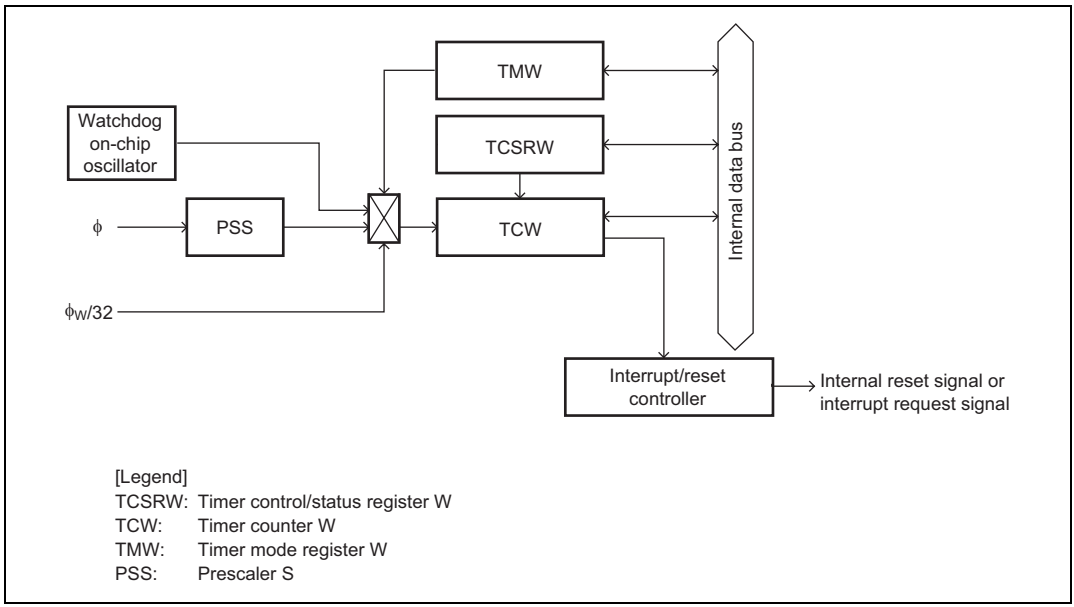

Figure 9.17(2) Block Diagram of Watchdog Timer (H8/38124 Group)

Register Configuration

Table 9.16 shows the register configuration of the watchdog timer.

Table 9.16 Watchdog Timer Registers

Name	Abbr.	R/W	Initial Value	Address
Timer control/status register W	TCSRW	R/W	H'AA	H'FFB2
Timer counter W	TCW	R/W	H'00	H'FFB3
Timer mode register W*	TMW	R/W	H'FF	H'FFF8
Clock stop register 2	CKSTPR2	R/W	H'FF	H'FFFB
Port mode register 2	PMR2	R/W	H'D8	H'FFC9

Note: * This register is implemented on the H8/38124 Group only.

9.6.2 Register Descriptions

Timer Control/Status Register W (TCSRW)

Bit	7	6	5	4	3	2	1	0
	B6WI	TCWE	B4WI	TCSRWE	B2WI	WDON	B0WI	WRST
Initial value	1	0	1	0	1	0/1*2	1	0
Read/Write	R	(R/W)*1	R	(R/W)*1	R	(R/W)*1	R	(R/W)*1

Notes: 1. Write is enabled only under certain conditions, which are given in the descriptions of the individual bits.
2. Initial value is 0 on H8/38024, H8/38024S, and H8/38024R Group; initial value is 1 on H8/38124 Group.

TCSRW is an 8-bit read/write register that controls write access to TCW and TCSRW itself, controls watchdog timer operations, and indicates operating status.

Bit 7—Bit 6 Write Disable (B6WI)

Bit 7 controls the writing of data to bit 6 in TCSRW.

Bit 7 B6WI	Description	
0	Bit 6 is write-enabled	
1	Bit 6 is write-protected	(initial value)

This bit is always read as 1. Data written to this bit is not stored.

Bit 6—Timer Counter W Write Enable (TCWE)

Bit 6 controls the writing of data to TCW.

Bit 6 TCWE	Description	
0	Data cannot be written to TCW	(initial value)
1	Data can be written to TCW	

Bit 5—Bit 4 Write Disable (B4WI)

Bit 5 controls the writing of data to bit 4 in TCSRW.

Bit 5 B4WI	Description	
0	Bit 4 is write-enabled	
1	Bit 4 is write-protected	(initial value)

This bit is always read as 1. Data written to this bit is not stored.

Bit 4—Timer Control/Status Register W Write Enable (TCSRWE)

Bit 4 controls the writing of data to bits 2 and 0 in TCSRW.

Bit 4 TCSRWE	Description	
0	Data cannot be written to bits 2 and 0	(initial value)
1	Data can be written to bits 2 and 0	

Bit 3—Bit 2 Write Inhibit (B2WI)

Bit 3 controls the writing of data to bit 2 in TCSRW.

Bit 3 B2WI	Description	
0	Bit 2 is write-enabled	
1	Bit 2 is write-protected	(initial value)

This bit is always read as 1. Data written to this bit is not stored.

Bit 2—Watchdog Timer On (WDON)

Bit 2 enables watchdog timer operation.

Bit 2 WDON	Description
0	Watchdog timer operation is disabled (initial value)* Clearing conditions: Reset, or when TCSRWE is set to 1 and 0 is written to B2WI and WDON. Note that a reset clears WDON to 0 on the H8/38024, H8/38024S, and H8/38024R Group, but sets WDON to 1 on the H8/38124 Group. Note: * Initial value is 0 on H8/38024, H8/38024S, and H8/38024R Group; initial value is 1 on H8/38124 Group.
1	Watchdog timer operation is enabled Setting condition: When TCSRWE is set to 1 and 0 is written to B2WI and 1 is written to WDON

Counting starts when this bit is set to 1, and stops when this bit is cleared to 0.

Bit 1—Bit 0 Write Inhibit (B0WI)

Bit 1 controls the writing of data to bit 0 in TCSRW.

Bit 1 B0WI	Description
0	Bit 0 is write-enabled
1	Bit 0 is write-protected (initial value)

This bit is always read as 1. Data written to this bit is not stored.

Bit 0—Watchdog Timer Reset (WRST)

Bit 0 indicates that TCW has overflowed, generating an internal reset signal. The internal reset signal generated by the overflow resets the entire chip. WRST is cleared to 0 by a reset from the $\overline{\text{RES}}$ pin, or when software writes 0.

Bit 0 WRST	Description
0	Clearing conditions: Reset by $\overline{\text{RES}}$ pin When TCSRWE = 1, and 0 is written in both BOWI and WRST
1	Setting condition: When TCW overflows and an internal reset signal is generated

Timer Counter W (TCW)

Bit	7	6	5	4	3	2	1	0
	TCW7	TCW6	TCW5	TCW4	TCW3	TCW2	TCW1	TCW0
Initial value	0	0	0	0	0	0	0	0
Read/Write	R/W	R/W	R/W	R/W	R/W	R/W	R/W	R/W

For the H8/38024, H8/38024S, and H8/38024R groups, the clock source is ϕ/8,192 or ϕw/32. For the H8/38124 group, the clock source is selected based on the timer mode register (TMW) setting if WDCKS is 0 and is ϕw/32 if WDCKS is 1.

When TCW overflows from H'FF to H'00, an internal reset signal is generated and WRST is set to 1 in TCSRW. Upon reset, TCW is initialized to H'00.

Timer Mode Register (TMW)

Bit	7	6	5	4	3	2	1	0
	—	—	—	—	CKS3	CKS2	CKS1	CKS0
Initial value	1	1	1	1	1	1	1	1
Read/Write	—	—	—	—	R/W	R/W	R/W	R/W

The TMW register is only implemented on the H8/38124. The input clock is selected using combinations of CKS3 to CKS0.

Bits 7 to 4—Reserved

These bits are always read as 1.

Bits 3 to 0—Clock Select (CKS3 to CKS0)

These bits are used to select the clock input to TCW from among 10 internal options. Clock source selection using this register is enabled when WDCKS in port mode register 2 (PMR2) is cleared to 0. If WDCKS is set to 1 the ϕw/32 clock source is selected, regardless of the settings of the bits in this register.

Bit 3 CKS3	Bit 2 CKS2	Bit 1 CKS1	Bit 0 CKS0	Description	
1	0	0	0	Internal clock: ϕ/64 count	
			1	Internal clock: ϕ/128 count	
		1	0	Internal clock: ϕ/256 count	
			1	Internal clock: ϕ/512 count	
	1	0	0	Internal clock: ϕ/1024 count	
			1	Internal clock: ϕ/2048 count	
		1	0	Internal clock: ϕ/4096 count	
			1	Internal clock: ϕ/8192 count	(initial value)
0	X	X	X	Watchdog on-chip oscillator	

Note: X: Don't care

Clock Stop Register 2 (CKSTPR2)

Bit	7	6	5	4	3	2	1	0
	LVDCKSTD*	—	—	PW2CKSTP	AECKSTP	WDCKSTP	PW1CKSTP	LDCKSTP
Initial value	1	1	1	1	1	1	1	1
Read/Write	R/W	—	—	R/W	R/W	R/W	R/W	R/W

Note: * Bits 6 and 5 are also reserved on products other than the H8/38124 Group.

CKSTPR2 is an 8-bit read/write register that performs module standby mode control for peripheral modules. Only the bit relating to the watchdog timer is described here. For details of the other bits, see the sections on the relevant modules.

Bit 2—Watchdog Timer Module Standby Mode Control (WDCKSTP)

Bit 2 controls setting and clearing of module standby mode for the watchdog timer.

WDCKSTP	Description	
0	Watchdog timer is set to module standby mode	
1	Watchdog timer module standby mode is cleared	(initial value)

Note: WDCKSTP is valid when the WDON bit is cleared to 0 in timer control/status register W (TCSRW). If WDCKSTP is set to 0 while WDON is set to 1 (during watchdog timer operation), 0 will be set in WDCKSTP but the watchdog timer will continue its watchdog function and will not enter module standby mode. When the watchdog function ends and WDON is cleared to 0 by software, the WDCKSTP setting will become valid and the watchdog timer will enter module standby mode.

Port Mode Register 2 (PMR2)

Bit	7	6	5	4	3	2	1	0
	—	—	POF1	—	—	WDCKS	NCS	IRQ0
Initial value	1	1	0	1	1	0	0	0
Read/Write	—	—	R/W	—	—	R/W	R/W	R/W

PMR2 is an 8-bit read/write register, mainly controlling the selection of pin functions for port 2. Only the bit relating to the watchdog timer is described here. For details of the other bits, see section 8, I/O Ports.

Bit 2—Watchdog Timer Source Clock Select (WDCKS)

This bit selects the watchdog timer source clock. Note that stabilization times for the H8/38024, H8/38024S, and H8/38024R Group and for the H8/38124 Group are different.

- H8/38024, H8/38024S, H8/38024R Group

WDCKS	Description	
0	ϕ/8192 selected	(initial value)
1	ϕw/32 selected	

- H8/38124 Group

WDCKS	Description	
0	Selects clock based on timer mode register W (TMW) setting	(initial value)
1	ϕw/32 selected	

9.6.3 Timer Operation

The watchdog timer has an 8-bit counter (TCW) that is incremented by clock input. The input clock is selected by the WDCKS in port mode register 2 (PMR2): on the H8/38024, H8/38024S, and H8/38024R Group, ϕ/8192 is selected when WDCKS is cleared to 0, and ϕw/32 when set to 1. On the H8/38124 Group, if WDCKS is cleared to 0 the clock selection is specified by the setting of timer mode register W (TMW), and if WDCKS is set to 1 the ϕw/32 clock source is selected. When TCSRWE = 1 in TCSRW, if 0 is written in B2WI and 1 is simultaneously written in WDON, TCW starts counting up. (Write access to TCSRW is required twice to turn on the watchdog timer. However, on the H8/38124 Group WDON is set to 1 after a reset is cancelled, TCW starts to be incremented even without gaining write access to TCSRW.) When the TCW count value reaches H'FF, the next clock input causes the watchdog timer to overflow, and an internal reset signal is generated one base clock (ϕ or ϕ_{SUB}) cycle later. The internal reset signal is output for 512 clock cycles of the ϕ_{OSC} clock. It is possible to write to TCW, causing TCW to count up from the written value. The overflow period can be set in the range from 1 to 256 input clocks, depending on the value written in TCW.

Figure 9.18 shows an example of watchdog timer operations.

Example: ϕ = 2 MHz and the desired overflow period is 30 ms.

$$\frac{2 \cdot 10^6}{8192} \cdot 30 \cdot 10^{-3} = 7.3$$

The value set in TCW should therefore be 256 – 8 = 248 (H'F8).

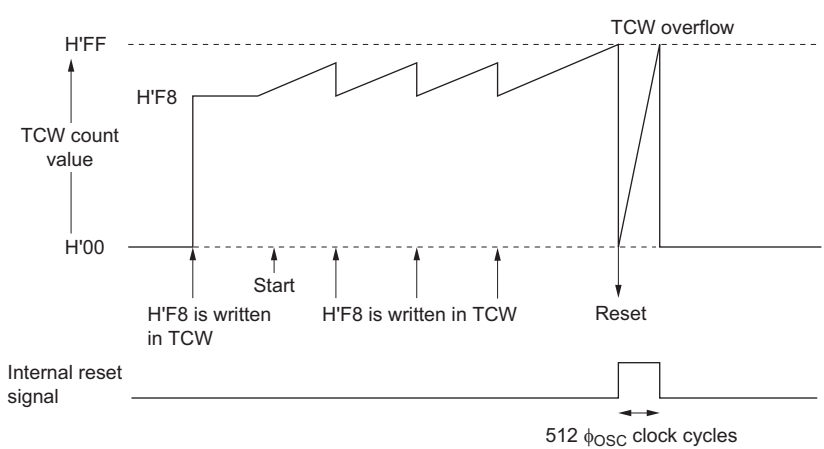

Figure 9.18 Typical Watchdog Timer Operations (Example)

9.6.4 Watchdog Timer Operation States

Table 9.17(1) and table 9.17(2) summarize the watchdog timer operation states for the H8/38024, H8/38024S, and H8/38024R Group, and for the H8/38124 Group, respectively.

Table 9.17(1) Watchdog Timer Operation States (H8/38024, H8/38024S, H8/38024R Group)

Operation Mode	Reset	Active	Sleep	Watch	Subactive	Subsleep	Standby	Module Standby
TCW	Reset	Functions	Functions	Halted	Functions/ Halted*	Halted	Halted	Halted
TCSRW	Reset	Functions	Functions	Retained	Functions/ Halted*	Retained	Retained	Retained

Note: * Functions when ϕw/32 is selected as the input clock.

Table 9.17(2) Watchdog Timer Operation States (H8/38124 Group)

Operation Mode	Reset	Active	Sleep	Watch	Subactive	Subsleep	Standby	Module Standby
TCW	Reset	Functions	Functions	Functions/ Halted*1	Functions/ Halted*1	Functions/ Halted*1	Functions/ Halted*2	Halted
TCSRW	Reset	Functions	Functions	Functions/ Retained*1	Functions/ Halted*1	Functions/ Retained*1	Functions/ Retained*2	Retained
TMW	Reset	Functions	Functions	Functions/ Retained*1	Functions/ Halted*1	Functions/ Retained*1	Functions/ Retained*2	Retained

Notes: 1. Operates when ϕw/32 or the on-chip oscillator is selected as the internal clock.
2. Operates only when the on-chip oscillator is selected.

9.7 Asynchronous Event Counter (AEC)

9.7.1 Overview

The asynchronous event counter is incremented by external event clock or internal clock input.

Features

Features of the asynchronous event counter are given below.

- Can count asynchronous events
  Can count external events input asynchronously without regard to the operation of base clocks ϕ and ϕ_{SUB}.
  The counter has a 16-bit configuration, enabling it to count up to 65536 (2^{16}) events.
- Can also be used as two independent 8-bit event counter channels.
- Can be used as single-channel independent 16-bit event counter.
- Event/clock input is enabled only when IRQAEC is high or event counter PWM output (IECPWM) is high.
- Both edge sensing can be used for IRQAEC or event counter PWM output (IECPWM) interrupts. When the asynchronous counter is not used, independent interrupt function use is possible.
- When an event counter PWM is used, event clock input enabling/disabling can be performed automatically in a fixed cycle.
- External event input or a prescaler output clock can be selected by software for the ECH and ECL clock sources. $\phi/2$, $\phi/4$, or $\phi/8$ can be selected as the prescaler output clock.
- Both edge counting is possible for AEVL and AEVH.
- Counter resetting and halting of the count-up function controllable by software
- Automatic interrupt generation on detection of event counter overflow
- Use of module standby mode enables this module to be placed in standby mode independently when not used.

Block Diagram

Figure 9.19 shows a block diagram of the asynchronous event counter.

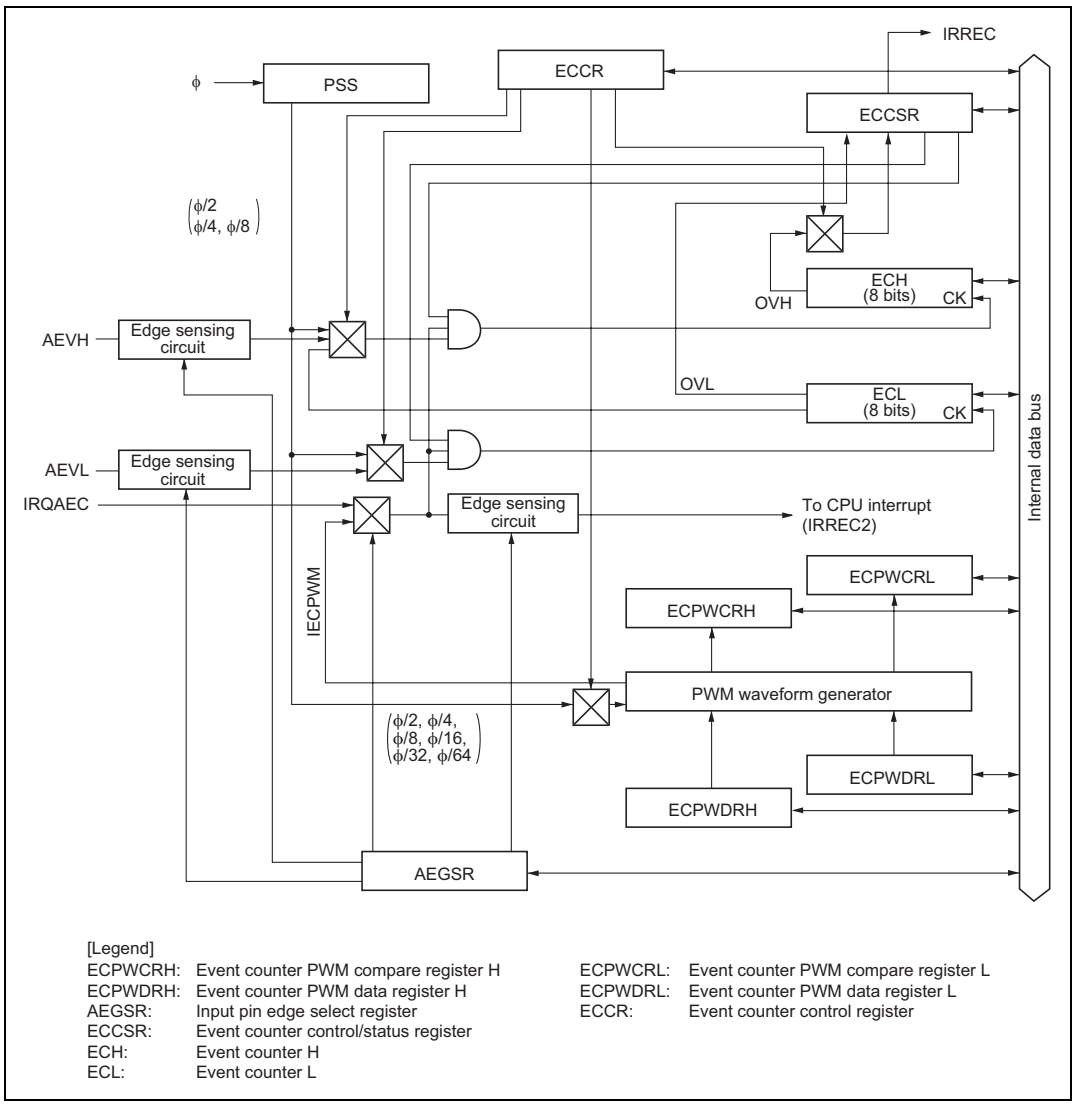

Figure 9.19 Block Diagram of Asynchronous Event Counter

Pin Configuration

Table 9.18 shows the asynchronous event counter pin configuration.

Table 9.18 Pin Configuration

Name	Abbr.	I/O	Function
Asynchronous event input H	AEVH	Input	Event input pin for input to event counter H
Asynchronous event input L	AEVL	Input	Event input pin for input to event counter L
Event input enable interrupt input	IRQAEC	Input	Input pin for interrupt enabling event input

Register Configuration

Table 9.19 shows the register configuration of the asynchronous event counter.

Table 9.19 Asynchronous Event Counter Registers

Name	Abbr.	R/W	Initial Value	Address
Event counter PWM compare register H	ECPWCRH	R/W	H'FF	H'FF8C
Event counter PWM compare register L	ECPWCRL	R/W	H'FF	H'FF8D
Event counter PWM data register H	ECPWDRH	W	H'00	H'FF8E
Event counter PWM data register L	ECPWDRL	W	H'00	H'FF8F
Input pin edge select register	AEGSR	R/W	H'00	H'FF92
Event counter control register	ECCR	R/W	H'00	H'FF94
Event counter control/status register	ECCSR	R/W	H'00	H'FF95
Event counter H	ECH	R	H'00	H'FF96
Event counter L	ECL	R	H'00	H'FF97
Clock stop register 2	CKSTPR2	R/W	H'FF	H'FFFB

9.7.2 Register Configurations

Event Counter PWM Compare Register H (ECPWCRH)

Bit	7	6	5	4	3	2	1	0
	ECPWCRH7	ECPWCRH6	ECPWCRH5	ECPWCRH4	ECPWCRH3	ECPWCRH2	ECPWCRH1	ECPWCRH0
Initial value	1	1	1	1	1	1	1	1
Read/Write	R/W	R/W	R/W	R/W	R/W	R/W	R/W	R/W

Note: When ECPWME in AEGSR is 1, event counter PWM is operating and therefore ECPWCRH should not be modified.
When changing the conversion period, event counter PWM must be halted by clearing ECPWME to 0 in AEGSR before modifying ECPWCRH.

ECPWCRH is an 8-bit read/write register that sets the event counter PWM waveform conversion period.

Event Counter PWM Compare Register L (ECPWCRL)

Bit	7	6	5	4	3	2	1	0
	ECPWCRL7	ECPWCRL6	ECPWCRL5	ECPWCRL4	ECPWCRL3	ECPWCRL2	ECPWCRL1	ECPWCRL0
Initial value	1	1	1	1	1	1	1	1
Read/Write	R/W	R/W	R/W	R/W	R/W	R/W	R/W	R/W

Note: When ECPWME in AEGSR is 1, event counter PWM is operating and therefore ECPWCRL should not be modified.
When changing the conversion period, event counter PWM must be halted by clearing ECPWME to 0 in AEGSR before modifying ECPWCRL.

ECPWCRL is an 8-bit read/write register that sets the event counter PWM waveform conversion period.

Event Counter PWM Data Register H (ECPWDRH)

Bit	7	6	5	4	3	2	1	0
	ECPWDRH7	ECPWDRH6	ECPWDRH5	ECPWDRH4	ECPWDRH3	ECPWDRH2	ECPWDRH1	ECPWDRH0
Initial value	0	0	0	0	0	0	0	0
Read/Write	W	W	W	W	W	W	W	W

Note: When ECPWME in AEGSR is 1, event counter PWM is operating and therefore ECPWDRH should not be modified.
When changing the data, event counter PWM must be halted by clearing ECPWME to 0 in AEGSR before modifying ECPWDRH.

ECPWDRH is an 8-bit write-only register that controls event counter PWM waveform generator data.

Event Counter PWM Data Register L (ECPWDRL)

Bit	7	6	5	4	3	2	1	0
	ECPWDRL7	ECPWDRL6	ECPWDRL5	ECPWDRL4	ECPWDRL3	ECPWDRL2	ECPWDRL1	ECPWDRL0
Initial value	0	0	0	0	0	0	0	0
Read/Write	W	W	W	W	W	W	W	W

Note: When ECPWME in AEGSR is 1, event counter PWM is operating and therefore ECPWDRL should not be modified.
When changing the data, event counter PWM must be halted by clearing ECPWME to 0 in AEGSR before modifying ECPWDRL.

ECPWDRL is an 8-bit write-only register that controls event counter PWM waveform generator data.

Input Pin Edge Selection Register (AEGSR)

Bit	7	6	5	4	3	2	1	0
	AHEGS1	AHEGS0	ALEGS1	ALEGS0	AIEGS1	AIEGS0	ECPWME	—
Initial value	0	0	0	0	0	0	0	0
Read/Write	R/W	R/W	R/W	R/W	R/W	R/W	R/W	R/W

AEGSR is an 8-bit read/write register that selects rising, falling, or both edge sensing for the AEVH, AEVL, and IRQAEC pins.

Bits 7 and 6—AEC Edge Select H

Bits 7 and 6 select rising, falling, or both edge sensing for the AEVH pin.

Bit 7 AHEGS1	Bit 6 AHEGS0	Description	
0	0	Falling edge on AEVH pin is sensed	(initial value)
	1	Rising edge on AEVH pin is sensed	
1	0	Both edges on AEVH pin are sensed	
	1	Use prohibited	

Bits 5 and 4—AEC Edge Select L

Bits 5 and 4 select rising, falling, or both edge sensing for the AEVL pin.

Bit 5 ALEGS1	Bit 4 ALEGS0	Description	
0	0	Falling edge on AEVL pin is sensed	(initial value)
	1	Rising edge on AEVL pin is sensed	
1	0	Both edges on AEVL pin are sensed	
	1	Use prohibited	

Bits 3 and 2—IRQAEC Edge Select

Bits 3 and 2 select rising, falling, or both edge sensing for the IRQAEC pin.

Bit 3 AIEGS1	Bit 2 AIEGS0	Description	
0	0	Falling edge on IRQAEC pin is sensed	(initial value)
	1	Rising edge on IRQAEC pin is sensed	
1	0	Both edges on IRQAEC pin are sensed	
	1	Use prohibited	

Bit 1—Event Counter PWM Enable

Bit 1 controls enabling/disabling of event counter PWM and selection/deselection of IRQAEC.

Bit 1 ECPWME	Description	
0	AEC PWM halted, IRQAEC selected	(initial value)
1	AEC PWM operation enabled, IRQAEC deselected	

Bit 0—Reserved

Bit 0 is a readable/writable reserved bit. It is initialized to 0 by a reset.

Note: Do not set this bit to 1.

Event Counter Control Register (ECCR)

Bit	7	6	5	4	3	2	1	0
	ACKH1	ACKH0	ACKL1	ACKL0	PWCK2	PWCK1	PWCK0	—
Initial value	0	0	0	0	0	0	0	0
Read/Write	R/W	R/W	R/W	R/W	R/W	R/W	R/W	R/W

ECCR performs counter input clock and IRQAEC/IECPWM control.

Bits 7 and 6—AEC Clock Select H (ACKH1, ACKH0)

Bits 7 and 6 select the clock used by ECH.

Bit 7 ACKH1	Bit 6 ACKH0	Description	
0	0	AEVH pin input	(initial value)
	1	$\phi/2$	
1	0	$\phi/4$	
	1	$\phi/8$	

Bits 5 and 4—AEC Clock Select L (ACKL1, ACKL0)

Bits 5 and 4 select the clock used by ECL.

Bit 5 ACKL1	Bit 4 ACKL0	Description	
0	0	AEVL pin input	(initial value)
	1	ϕ/2	
1	0	ϕ/4	
	1	ϕ/8	

Bits 3 to 1—Event Counter PWM Clock Select (PWCK2, PWCK1, PWCK0)

Bits 3 to 1 select the event counter PWM clock.

Bit 3 PWCK2	Bit 2 PWCK1	Bit 1 PWCK0	Description	
0	0	0	ϕ/2	(initial value)
		1	ϕ/4	
	1	0	ϕ/8	
		1	ϕ/16	
1	*	0	ϕ/32	
		1	ϕ/64	

*: Don’t care

Bit 0—Reserved

Bit 0 is a readable/writable reserved bit. It is initialized to 0 by a reset.

Note: Do not set this bit to 1.

Event Counter Control/Status Register (ECCSR)

Bit	7	6	5	4	3	2	1	0
	OVH	OVL	—	CH2	CUEH	CUEL	CRCH	CRCL
Initial Value	0	0	0	0	0	0	0	0
Read/Write	R/W*	R/W*	R/W	R/W	R/W	R/W	R/W	R/W

Note: * Bits 7 and 6 can only be written with 0, for flag clearing.

ECCSR is an 8-bit read/write register that controls counter overflow detection, counter resetting, and halting of the count-up function.

ECCSR is initialized to H'00 upon reset.

Bit 7—Counter Overflow H (OVH)

Bit 7 is a status flag indicating that ECH has overflowed from H'FF to H'00. This flag is set when ECH overflows. It is cleared by software but cannot be set by software. OVH is cleared by reading it when set to 1, then writing 0.

When ECH and ECL are used as a 16-bit event counter with CH2 cleared to 0, OVH functions as a status flag indicating that the 16-bit event counter has overflowed from H'FFFF to H'0000.

Bit 7 OVH	Description
0	ECH has not overflowed (initial value) Clearing condition: After reading OVH = 1, cleared by writing 0 to OVH
1	ECH has overflowed Setting condition: Set when ECH overflows from H’FF to H’00

Bit 6—Counter Overflow L (OVL)

Bit 6 is a status flag indicating that ECL has overflowed from H'FF to H'00. This flag is set when ECL overflows. It is cleared by software but cannot be set by software. OVL is cleared by reading it when set to 1, then writing 0.

Bit 6 OVL	Description	
0	ECL has not overflowed Clearing condition: After reading OVL = 1, cleared by writing 0 to OVL	(initial value)
1	ECL has overflowed Setting condition: Set when ECL overflows from H'FF to H'00	

Bit 5—Reserved

Bit 5 is a readable/writable reserved bit. It is initialized to 0 by a reset.

Bit 4—Channel Select (CH2)

Bit 4 selects whether ECH and ECL are used as a single-channel 16-bit event counter or as two independent 8-bit event counter channels. When CH2 is cleared to 0, ECH and ECL function as a 16-bit event counter which is incremented each time an event clock is input to the AEVL pin. In this case, the overflow signal from ECL is selected as the ECH input clock. When CH2 is set to 1, ECH and ECL function as independent 8-bit event counters which are incremented each time an event clock is input to the AEVH or AEVL pin, respectively.

Bit 4 CH2	Description	
0	ECH and ECL are used together as a single-channel 16-bit event counter	(initial value)
1	ECH and ECL are used as two independent 8-bit event counter channels	

Bit 3—Count-up Enable H (CUEH)

Bit 3 enables event clock input to ECH. When 1 is written to this bit, event clock input is enabled and increments the counter. When 0 is written to this bit, event clock input is disabled and the ECH value is held. The AEVH pin or the ECL overflow signal can be selected as the event clock source by bit CH2.

Bit 3 CUEH	Description	
0	ECH event clock input is disabled ECH value is held	(initial value)
1	ECH event clock input is enabled	

Bit 2—Count-up Enable L (CUEL)

Bit 2 enables event clock input to ECL. When 1 is written to this bit, event clock input is enabled and increments the counter. When 0 is written to this bit, event clock input is disabled and the ECL value is held.

Bit 2 CUEL	Description	
0	ECL event clock input is disabled ECL value is held	(initial value)
1	ECL event clock input is enabled	

Bit 1—Counter Reset Control H (CRCH)

Bit 1 controls resetting of ECH. When this bit is cleared to 0, ECH is reset. When 1 is written to this bit, the counter reset is cleared and the ECH count-up function is enabled.

Bit 1 CRCH	Description	
0	ECH is reset	(initial value)
1	ECH reset is cleared and count-up function is enabled	

Bit 0—Counter Reset Control L (CRCL)

Bit 0 controls resetting of ECL. When this bit is cleared to 0, ECL is reset. When 1 is written to this bit, the counter reset is cleared and the ECL count-up function is enabled.

Bit 0 CRCL	Description	
0	ECL is reset	(initial value)
1	ECL reset is cleared and count-up function is enabled	

Event Counter H (ECH)

Bit	7	6	5	4	3	2	1	0
	ECH7	ECH6	ECH5	ECH4	ECH3	ECH2	ECH1	ECH0
Initial Value	0	0	0	0	0	0	0	0
Read/Write	R	R	R	R	R	R	R	R

ECH is an 8-bit read-only up-counter that operates either as an independent 8-bit event counter or as the upper 8-bit up-counter of a 16-bit event counter configured in combination with ECL. The external asynchronous event AEVH pin, ϕ/2, ϕ/4, ϕ/8, or the overflow signal from lower 8-bit counter ECL can be selected as the input clock source. ECH can be cleared to H'00 by software, and is also initialized to H'00 upon reset.

Event Counter L (ECL)

Bit	7	6	5	4	3	2	1	0
	ECL7	ECL6	ECL5	ECL4	ECL3	ECL2	ECL1	ECL0
Initial Value	0	0	0	0	0	0	0	0
Read/Write	R	R	R	R	R	R	R	R

ECL is an 8-bit read-only up-counter that operates either as an independent 8-bit event counter or as the lower 8-bit up-counter of a 16-bit event counter configured in combination with ECH. The event clock from the external asynchronous event AEVL pin, ϕ/2, ϕ/4, or ϕ/8 is used as the input clock source. ECL can be cleared to H'00 by software, and is also initialized to H'00 upon reset.

Clock Stop Register 2 (CKSTPR2)

Bit	7	6	5	4	3	2	1	0
	LVDCKSTP*	—	—	PW2CKSTP	AECKSTP	WDCKSTP	PW1CKSTP	LDCKSTP
Initial value	1	1	1	1	1	1	1	1
Read/Write	R/W	—	—	R/W	R/W	R/W	R/W	R/W

Note: * Bits 6 and 5 are also reserved on products other than the H8/38124 Group.

CKSTPR2 is an 8-bit read/write register that performs module standby mode control for peripheral modules. Only the bit relating to the asynchronous event counter is described here. For details of the other bits, see the sections on the relevant modules.

Bit 3—Asynchronous Event Counter Module Standby Mode Control (AECKSTP)

Bit 3 controls setting and clearing of module standby mode for the asynchronous event counter.

AECKSTP	Description	
0	Asynchronous event counter is set to module standby mode	
1	Asynchronous event counter module standby mode is cleared	(initial value)

9.7.3 Operation

16-bit Event Counter Operation

When bit CH2 is cleared to 0 in ECCSR, ECH and ECL operate as a 16-bit event counter.

Any of four input clock sources—ϕ/2, ϕ/4, ϕ/8, or AEVL pin input—can be selected by means of bits ACKL1 and ACKL0 in ECCR.

When AEVL pin input is selected, input sensing is selected with bits ALEGS1 and ALEGS0.

The input clock is enabled only when IRQAEC is high or IECPWM is high. When IRQAEC is low or IECPWM is low, the input clock is not input to the counter, which therefore does not operate. Figure 9.20 shows an example of the software processing when ECH and ECL are used as a 16-bit event counter.

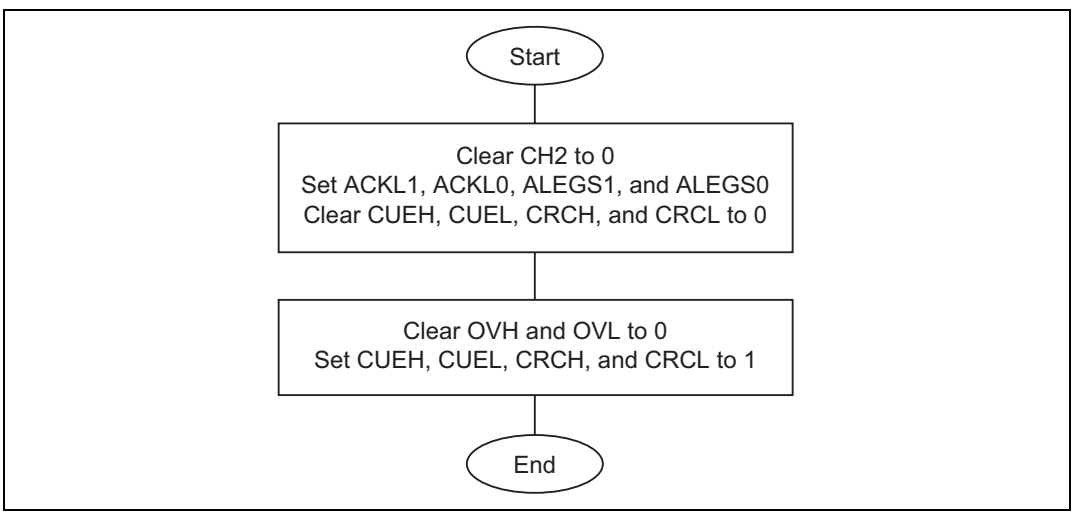

Figure 9.20 Example of Software Processing when Using ECH and ECL as 16-Bit Event Counter

As CH2 is cleared to 0 by a reset, ECH and ECL operate as a 16-bit event counter after a reset, and as ACKL1 and ACKL0 are cleared to 00, the operating clock is asynchronous event input from the AEVL pin (using falling edge sensing). When the next clock is input after the count value reaches H'FF in both ECH and ECL, ECH and ECL overflow from H'FFFF to H'0000, the OVH flag is set to 1 in ECCSR, the ECH and ECL count values each return to H'00, and counting up is restarted. When overflow occurs, the IRREC bit is set to 1 in IRR2. If the IENEC bit in IENR2 is 1 at this time, an interrupt request is sent to the CPU.

8-bit Event Counter Operation

When bit CH2 is set to 1 in ECCSR, ECH and ECL operate as independent 8-bit event counters.

ϕ/2, ϕ/4, ϕ/8, or AEVH pin input can be selected as the input clock source for ECH by means of bits ACKH1 and ACKH0 in ECCR, and ϕ/2, ϕ/4, ϕ/8, or AEVL pin input can be selected as the input clock source for ECL by means of bits ACKL1 and ACKL0 in ECCR.

Input sensing is selected with bits AHEGS1 and AHEGS0 when AEVH pin input is selected, and with bits ALEGS1 and ALEGS0 when AEVL pin input is selected.

The input clock is enabled only when IRQAEC is high or IECPWM is high. When IRQAEC is low or IECPWM is low, the input clock is not input to the counter, which therefore does not operate. Figure 9.21 shows an example of the software processing when ECH and ECL are used as 8-bit event counters.

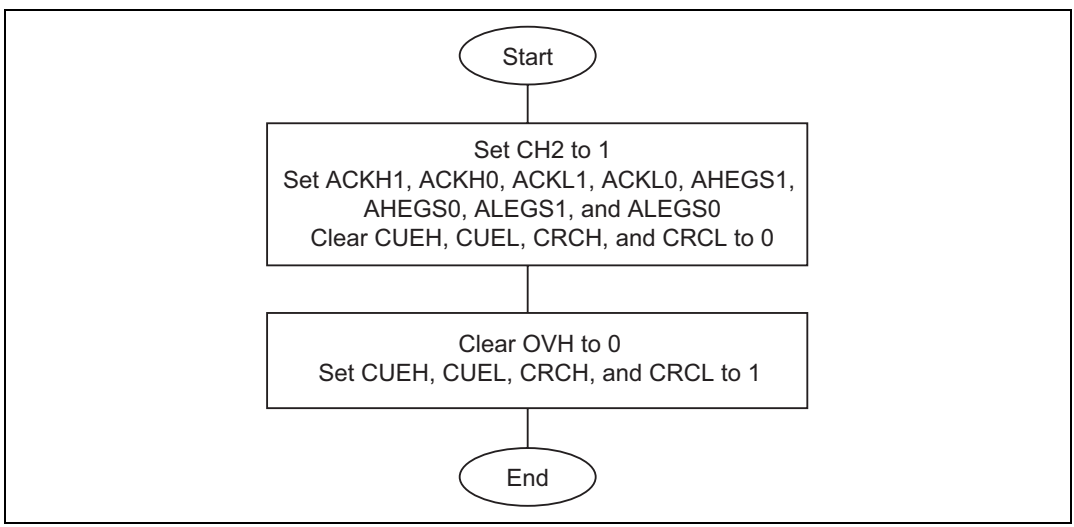

Figure 9.21 Example of Software Processing when Using ECH and ECL as 8-Bit Event Counters

ECH and ECL can be used as 8-bit event counters by carrying out the software processing shown in the example in figure 9.21. When the next clock is input after the ECH count value reaches H'FF, ECH overflows, the OVH flag is set to 1 in ECCSR, the ECH count value returns to H'00, and counting up is restarted. Similarly, when the next clock is input after the ECL count value reaches H'FF, ECL overflows, the OVL flag is set to 1 in ECCSR, the ECL count value returns to H'00, and counting up is restarted. When overflow occurs, the IRREC bit is set to 1 in IRR2. If the IENEC bit in IENR2 is 1 at this time, an interrupt request is sent to the CPU.

IRQAEC Operation

When ECPWME in AEGSR is 0, the ECH and ECL input clocks are enabled only when IRQAEC is high. When IRQAEC is low, the input clocks are not input to the counters, and so ECH and ECL do not count. ECH and ECL count operations can therefore be controlled from outside by controlling IRQAEC. In this case, ECH and ECL cannot be controlled individually.

IRQAEC can also operate as an interrupt source. In this case the vector number is 6 and the vector addresses are H'000C and H'000D.

Interrupt enabling is controlled by IENEC2 in IENR1. When an IRQAEC interrupt is generated, IRR1 interrupt request flag IRREC2 is set to 1. If IENEC2 in IENR1 is set to 1 at this time, an interrupt request is sent to the CPU.

Rising, falling, or both edge sensing can be selected for the IRQAEC input pin, with bits AIAGS1 and AIAGS0 in AEGSR.

Note: On the H8/38124 Group, control of switching between the system clock oscillator and the on-chip oscillator during resets should be performed by setting the IRQAEC input level. Refer to section 4, Clock Pulse Generators, for details.

Event Counter PWM Operation

When ECPWME in AEGSR is 1, the ECH and ECL input clocks are enabled only when event counter PWM output (IECPWM) is high. When IECPWM is low, the input clocks are not input to the counters, and so ECH and ECL do not count. ECH and ECL count operations can therefore be controlled cyclically from outside by controlling event counter PWM. In this case, ECH and ECL cannot be controlled individually.

IECPWM can also operate as an interrupt source. In this case the vector number is 6 and the vector addresses are H'000C and H'000D.

Interrupt enabling is controlled by IENEC2 in IENR1. When an IECPWM interrupt is generated, IRR1 interrupt request flag IRREC2 is set to 1. If IENEC2 in IENR1 is set to 1 at this time, an interrupt request is sent to the CPU.

Rising, falling, or both edge detection can be selected for IECPWM interrupt sensing with bits AIAGS1 and AIAGS0 in AEGSR.

Figure 9.22 and table 9.20 show examples of event counter PWM operation.

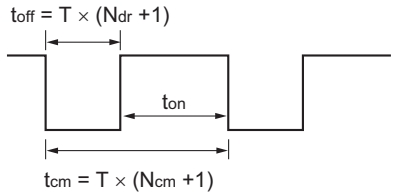

T_{on} : Clock input enabled time
T_{off} : Clock input disabled time
T_{cm} : One conversion period
T : ECPWM input clock cycle
N_{dr} : Value of ECPWDRH and ECPWDRL
Fixed low when Ndr = H'FFFF
N_{cm} : Value of ECPWCRH and ECPWCRL

Figure 9.22 Event Counter Operation Waveform

Note: N_{dr} and N_{cm} above must be set so that $N_{dr} < N_{cm}$. If the settings do not satisfy this condition, do not set ECPWME in AEGSR to 1.

Table 9.20 Examples of Event Counter PWM Operation

Conditions: f_{osc} = 4 MHz, f_{ϕ} = 2 MHz, high-speed active mode, ECPWCR value (N_{cm}) = H'7A11, ECPWDR value (N_{dr}) = H'16E3

Clock Source Selection	Clock Source Cycle (T)*	ECPWCR Value (N_{cm})	ECPWDR Value (N_{dr})	t_{off} = T • (N_{dr} + 1)	t_{cm} = T • (N_{cm} + 1)	$t_{on} = t_{cm} - t_{off}$
ϕ/2	1 µs	H'7A11 D'31249	H'16E3 D'5859	5.86 ms	31.25 ms	25.39 ms
ϕ/4	2 µs			11.72 ms	62.5 ms	50.78 ms
ϕ/8	4 µs			23.44 ms	125.0 ms	101.56 ms
ϕ/16	8 µs			46.88 ms	250.0 ms	203.12 ms
ϕ/32	16 µs			93.76 ms	500.0 ms	406.24 ms
ϕ/64	32 µs			187.52 ms	1000.0 ms	812.48 ms

Note: * t_{off} minimum width

Clock Input Enable/Disable Function Operation

The clock input to the event counter can be controlled by the IRQAEC pin when ECPWME in AEGSR is 0, and by event counter PWM output IECPWM when ECPWME in AEGSR is 1. As this function forcibly terminates the clock input by each signal, a maximum error of one count will occur depending the IRQAEC or IECPWM timing.

Figure 9.23 shows an example of the operation of this function.

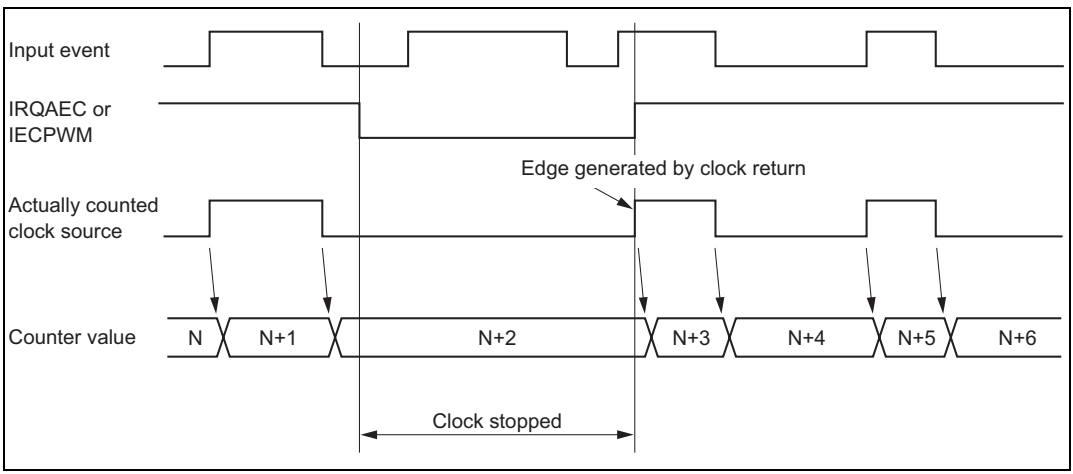

Figure 9.23 Example of Clock Control Operation

9.7.4 Asynchronous Event Counter Operation Modes

Asynchronous event counter operation modes are shown in table 9.21.

Table 9.21 Asynchronous Event Counter Operation Modes

Operation Mode	Reset	Active	Sleep	Watch	Subactive	Subsleep	Standby	Module Standby
AEGSR	Reset	Functions	Functions	Retained*1	Functions	Functions	Retained*1	Retained
ECCR	Reset	Functions	Functions	Retained*1	Functions	Functions	Retained*1	Retained
ECCSR	Reset	Functions	Functions	Retained*1	Functions	Functions	Retained*1	Retained
ECH	Reset	Functions	Functions	Functions*1*2	Functions*2	Functions*2	Functions*1*2	Halted
ECL	Reset	Functions	Functions	Functions*1*2	Functions*2	Functions*2	Functions*1*2	Halted
IRQAEC	Reset	Functions	Functions	Retained*3	Functions	Functions	Retained*3	Retained*4
Event counter PWM	Reset	Functions	Functions	Retained	Retained	Retained	Retained	Retained

Notes: 1. When an asynchronous external event is input, the counter increments but the counter overflow H/L flags are not affected.
2. Operates when asynchronous external events are selected; halted and retained otherwise.
3. Clock control by IRQAEC operates, but interrupts do not.
4. As the clock is stopped in module standby mode, IRQAEC has no effect.

9.7.5 Application Notes

1. When reading the values in ECH and ECL, the correct value will not be returned if the event counter increments during the read operation. Therefore, if the counter is being used in the 8-bit mode, clear bits CUEH and CUEL in ECCSR to 0 before reading ECH or ECL. If the counter is being used in the 16-bit mode, clear CUEL only to 0 before reading ECH or ECL.
2. Use a clock with a frequency of up to 16 MHz for input to the AEVH and AEVL pins, and ensure that the high and low widths of the clock are at least half the OSC clock cycle duration. The duty cycle is immaterial.

Mode		Maximum AEVH/AEVL Pin Input Clock Frequency
Active (high-speed), sleep (high-speed)		16 MHz
Active (medium-speed), sleep (medium-speed)	(ϕ/16)	2 • f_{OSC}
	(ϕ/32)	f_{OSC}
	(ϕ/64)	1/2 • f_{OSC}
f_{OSC} = 1 MHz to 4 MHz	(ϕ/128)	1/4 • f_{OSC}
Watch, subactive, subsleep, standby	(ϕw/2)	1000 kHz
	(ϕw/4)	500 kHz
ϕw = 32.768 kHz or 38.4 kHz*	(ϕw/8)	250 kHz

Note: * Does not apply to H8/38124 Group.

3. When using the clock in the 16-bit mode, set CUEH to 1 first, then set CRCH to 1 in ECCSR. Or, set CUEH and CRCH simultaneously before inputting the clock. After that, do not change the CUEH value while using in the 16-bit mode. Otherwise, an error counter increment may occur. Also, to reset the counter, clear CRCH and CRCL to 0 simultaneously or clear CRCL and CRCH to 0 sequentially, in that order.
4. When ECPWME in AEGSR is 1, event counter PWM is operating and therefore ECPWCRH, ECPWCRL, ECPWDRH, and ECPWDRL should not be modified.

   When changing the data, event counter PWM must be halted by clearing ECPWME to 0 in AEGSR before modifying these registers.
5. The event counter PWM data register and event counter PWM compare register must be set so that event counter PWM data register < event counter PWM compare register. If the settings do not satisfy this condition, do not set ECPWME to 1 in AEGSR.
6. As synchronization is established internally when an IRQAEC interrupt is generated, a maximum error of 1 t_{cyc} will occur between clock halting and interrupt acceptance.

Section 10 Serial Communication Interface

10.1 Overview

The H8/38024 Group is provided with one serial communication interface, SCI3.

Serial communication interface 3 (SCI3) can carry out serial data communication in either asynchronous or synchronous mode.

10.1.1 Features

Features of SCI3 are listed below.

- Choice of asynchronous or synchronous mode for serial data communication
  - Asynchronous mode

    Serial data communication is performed asynchronously, with synchronization provided character by character. In this mode, serial data can be exchanged with standard asynchronous communication LSIs such as a Universal Asynchronous Receiver/Transmitter (UART) or Asynchronous Communication Interface Adapter (ACIA).

    There is a choice of 12 data transfer formats.

Data length	7, 8, 5 bits
Stop bit length	1 or 2 bits
Parity	Even, odd, or none
Receive error detection	Parity, overrun, and framing errors
Break detection	Break detected by reading the RXD_{32} pin level directly when a framing error occurs

  - Synchronous mode

    Serial data communication is synchronized with a clock. In this mode, serial data can be exchanged with another LSI that has a synchronous communication function.

Data length	8 bits
Receive error detection	Overrun errors

- Full-duplex communication

  Separate transmission and reception units are provided, enabling transmission and reception to be carried out simultaneously. The transmission and reception units are both double-buffered, allowing continuous transmission and reception.
- On-chip baud rate generator, allowing any desired bit rate to be selected
- Choice of an internal or external clock as the transmit/receive clock source
- Six interrupt sources: transmit end, transmit data empty, receive data full, overrun error, framing error, and parity error

Note: On the H8/38124 Group, the system clock generator must be used when carrying out this function.

10.1.2 Block Diagram

Figure 10.1 shows a block diagram of SCI3.

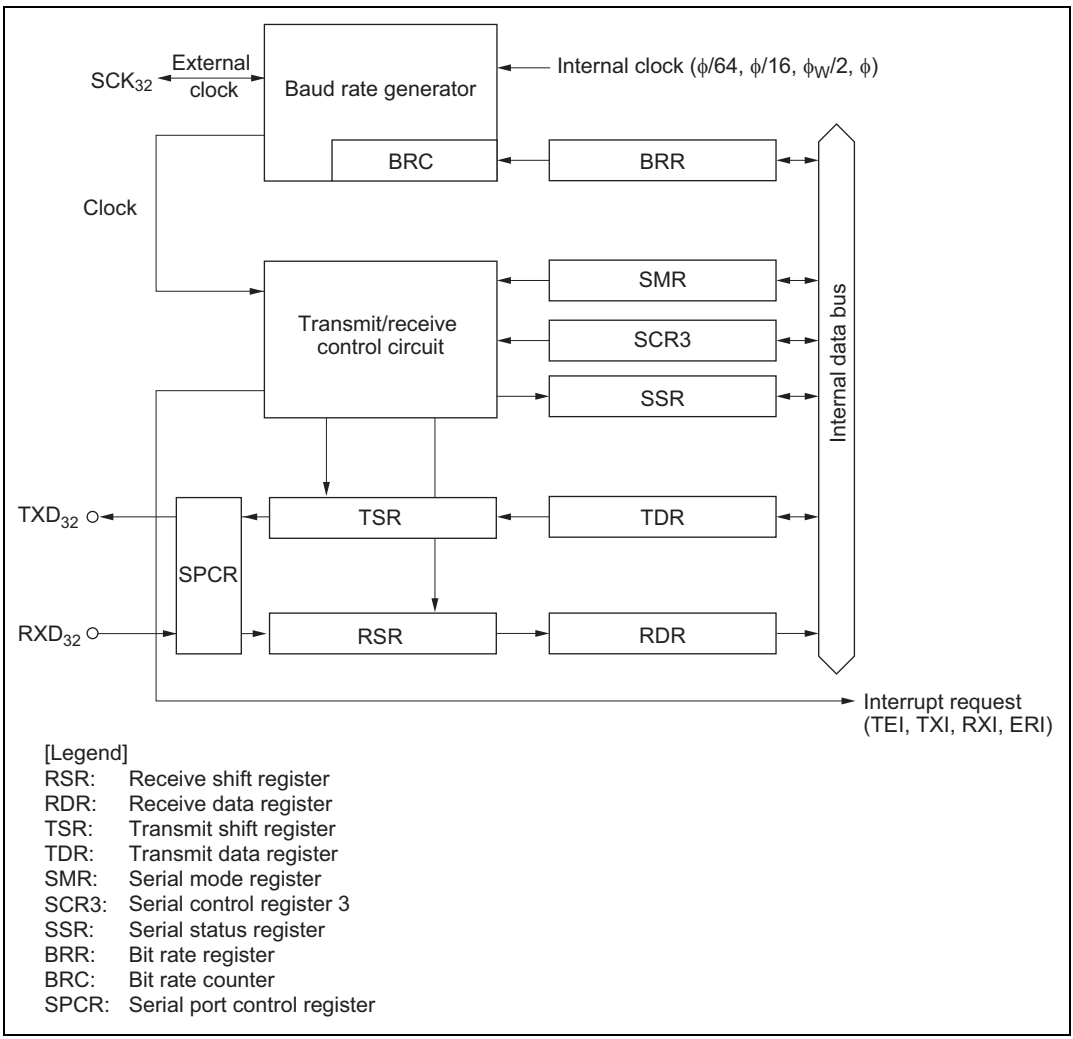

Figure 10.1 SCI3 Block Diagram

10.1.3 Pin Configuration

Table 10.1 shows the SCI3 pin configuration.

Table 10.1 Pin Configuration

Name	Abbr.	I/O	Function
SCI3 clock	SCK_{32}	I/O	SCI3 clock input/output
SCI3 receive data input	RXD_{32}	Input	SCI3 receive data input
SCI3 transmit data output	TXD_{32}	Output	SCI3 transmit data output

10.1.4 Register Configuration

Table 10.2 shows the SCI3 register configuration.

Table 10.2 Registers

Name	Abbr.	R/W	Initial Value	Address
Serial mode register	SMR	R/W	H'00	H'FFA8
Bit rate register	BRR	R/W	H'FF	H'FFA9
Serial control register 3	SCR3	R/W	H'00	H'FFAA
Transmit data register	TDR	R/W	H'FF	H'FFAB
Serial status register	SSR	R/W	H'84	H'FFAC
Receive data register	RDR	R	H'00	H'FFAD
Transmit shift register	TSR	Protected	—	—
Receive shift register	RSR	Protected	—	—
Bit rate counter	BRC	Protected	—	—
Clock stop register 1	CKSTPR1	R/W	H'FF	H'FFFA
Serial port control register	SPCR	R/W	—	H'FF91

10.2 Register Descriptions

10.2.1 Receive Shift Register (RSR)

Bit	7	6	5	4	3	2	1	0
Read/Write	—	—	—	—	—	—	—	—

RSR is a register used to receive serial data. Serial data input to RSR from the RXD_{32} pin is set in the order in which it is received, starting from the LSB (bit 0), and converted to parallel data. When one byte of data is received, it is transferred to RDR automatically.

RSR cannot be read or written directly by the CPU.

10.2.2 Receive Data Register (RDR)

Bit	7	6	5	4	3	2	1	0
	RDR7	RDR6	RDR5	RDR4	RDR3	RDR2	RDR1	RDR0
Initial value	0	0	0	0	0	0	0	0
Read/Write	R	R	R	R	R	R	R	R

RDR is an 8-bit register that stores received serial data.

When reception of one byte of data is finished, the received data is transferred from RSR to RDR, and the receive operation is completed. RSR is then able to receive data. RSR and RDR are double-buffered, allowing consecutive receive operations.

RDR is a read-only register, and cannot be written by the CPU.

RDR is initialized to H'00 upon reset, and in standby, module standby or watch mode.

10.2.3 Transmit Shift Register (TSR)

Bit	7	6	5	4	3	2	1	0
Read/Write	—	—	—	—	—	—	—	—

TSR is a register used to transmit serial data. Transmit data is first transferred from TDR to TSR, and serial data transmission is carried out by sending the data to the TXD_{32} pin in order, starting from the LSB (bit 0). When one byte of data is transmitted, the next byte of transmit data is transferred to TDR, and transmission started, automatically. Data transfer from TDR to TSR is not performed if no data has been written to TDR (if bit TDRE is set to 1 in the serial status register (SSR)).

TSR cannot be read or written directly by the CPU.

10.2.4 Transmit Data Register (TDR)

Bit	7	6	5	4	3	2	1	0
	TDR7	TDR6	TDR5	TDR4	TDR3	TDR2	TDR1	TDR0
Initial value	1	1	1	1	1	1	1	1
Read/Write	R/W	R/W	R/W	R/W	R/W	R/W	R/W	R/W

TDR is an 8-bit register that stores transmit data. When TSR is found to be empty, the transmit data written in TDR is transferred to TSR, and serial data transmission is started. Continuous transmission is possible by writing the next transmit data to TDR during TSR serial data transmission.

TDR can be read or written by the CPU at any time.

TDR is initialized to H'FF upon reset, and in standby, module standby, or watch mode.

10.2.5 Serial Mode Register (SMR)

Bit	7	6	5	4	3	2	1	0
	COM	CHR	PE	PM	STOP	MP	CKS1	CKS0
Initial value	0	0	0	0	0	0	0	0
Read/Write	R/W	R/W	R/W	R/W	R/W	R/W	R/W	R/W

SMR is an 8-bit register used to set the serial data transfer format and to select the clock source for the baud rate generator.

SMR can be read or written by the CPU at any time.

SMR is initialized to H'00 upon reset, and in standby, module standby, or watch mode.

Bit 7—Communication Mode (COM)

Bit 7 selects whether SCI3 operates in asynchronous mode or synchronous mode.

Bit 7 COM	Description	
0	Asynchronous mode	(initial value)
1	Synchronous mode	

Bit 6—Character Length (CHR)

Bit 6 selects either 7 or 8 bits as the data length to be used in asynchronous mode. In synchronous mode the data length is always 8 bits, irrespective of the bit 6 setting.

Bit 6 CHR	Description	
0	8-bit data/5-bit data*2	(initial value)
1	7-bit data*1/5-bit data*2	

Notes: 1. When 7-bit data is selected, the MSB (bit 7) of TDR is not transmitted.
2. When 5-bit data is selected, set both PE and MP to 1. The three most significant bits (bits 7, 6, and 5) of TDR are not transmitted.

Bit 5—Parity Enable (PE)

Bit 5 selects whether a parity bit is to be added during transmission and checked during reception in asynchronous mode. In synchronous mode parity bit addition and checking is not performed, irrespective of the bit 5 setting.

Bit 5 PE	Description	
0	Parity bit addition and checking disabled*2	(initial value)
1	Parity bit addition and checking enabled*1/*2	

Notes: 1. When PE is set to 1, even or odd parity, as designated by bit PM, is added to transmit data before it is sent, and the received parity bit is checked against the parity designated by bit PM.
2. For the case where 5-bit data is selected, see table 10.11.

Bit 4—Parity Mode (PM)

Bit 4 selects whether even or odd parity is to be used for parity addition and checking. The PM bit setting is only valid in asynchronous mode when bit PE is set to 1, enabling parity bit addition and checking. The PM bit setting is invalid in synchronous mode, and in asynchronous mode if parity bit addition and checking is disabled.

Bit 4 PM	Description	
0	Even parity*1	(initial value)
1	Odd parity*2	

Notes: 1. When even parity is selected, a parity bit is added in transmission so that the total number of 1 bits in the transmit data plus the parity bit is an even number; in reception, a check is carried out to confirm that the number of 1 bits in the receive data plus the parity bit is an even number.
2. When odd parity is selected, a parity bit is added in transmission so that the total number of 1 bits in the transmit data plus the parity bit is an odd number; in reception, a check is carried out to confirm that the number of 1 bits in the receive data plus the parity bit is an odd number.

Bit 3—Stop Bit Length (STOP)

Bit 3 selects 1 bit or 2 bits as the stop bit length in asynchronous mode. The STOP bit setting is only valid in asynchronous mode. When synchronous mode is selected the STOP bit setting is invalid since stop bits are not added.

Bit 3 STOP	Description	
0	1 stop bit*1	(initial value)
1	2 stop bits*2	

Notes: 1. In transmission, a single 1 bit (stop bit) is added at the end of a transmit character.
2. In transmission, two 1 bits (stop bits) are added at the end of a transmit character.

In reception, only the first of the received stop bits is checked, irrespective of the STOP bit setting. If the second stop bit is 1 it is treated as a stop bit, but if 0, it is treated as the start bit of the next transmit character.

Bit 2—5 Bit Communication (MP)

When this bit is one, the format of 5 bits communication becomes possible.

In the case of writing 1 to this bit, bit 5 (PE) should be written with 1 all at once.

Bit 2 MP	Description	
0	5 bit communication disabled	(initial value)
1	5 bit communication enabled	

Bits 1 and 0—Clock Select 1, 0 (CKS1, CKS0)

Bits 1 and 0 choose ϕ/64, ϕ/16, ϕw/2, or ϕ as the clock source for the baud rate generator.

For the relation between the clock source, bit rate register setting, and baud rate, see section 10.2.8, Bit rate register (BRR).

Bit 1 CKS1	Bit 0 CKS0	Description
0	0	ϕ clock (initial value)
0	1	ϕ w/2 clock*1/ϕ w clock*2
1	0	ϕ/16 clock
1	1	ϕ/64 clock

Notes: 1. ϕ w/2 clock in active (medium-speed/high-speed) mode and sleep mode
2. ϕ w clock in subactive mode and subsleep mode. In subactive or subsleep mode, SCI3 can be operated when CPU clock is ϕw/2 only.

10.2.6 Serial Control Register 3 (SCR3)

Bit	7	6	5	4	3	2	1	0
	TIE	RIE	TE	RE	MPIE	TEIE	CKE1	CKE0
Initial value	0	0	0	0	0	0	0	0
Read/Write	R/W	R/W	R/W	R/W	R/W	R/W	R/W	R/W

SCR3 is an 8-bit register for selecting transmit or receive operation, the asynchronous mode clock output, interrupt request enabling or disabling, and the transmit/receive clock source.

SCR3 can be read or written by the CPU at any time.

SCR3 is initialized to H'00 upon reset, and in standby, module standby or watch mode.

Bit 7—Transmit Interrupt Enable (TIE)

Bit 7 selects enabling or disabling of the transmit data empty interrupt request (TXI) when transmit data is transferred from the transmit data register (TDR) to the transmit shift register (TSR), and bit TDRE in the serial status register (SSR) is set to 1.

TXI can be released by clearing bit TDRE or bit TIE to 0.

Bit 7 TIE	Description	
0	Transmit data empty interrupt request (TXI) disabled	(initial value)
1	Transmit data empty interrupt request (TXI) enabled	

Bit 6—Receive Interrupt Enable (RIE)

Bit 6 selects enabling or disabling of the receive data full interrupt request (RXI) and the receive error interrupt request (ERI) when receive data is transferred from the receive shift register (RSR) to the receive data register (RDR), and bit RDRF in the serial status register (SSR) is set to 1. There are three kinds of receive error: overrun, framing, and parity.

RXI and ERI can be released by clearing bit RDRF or the FER, PER, or OER error flag to 0, or by clearing bit RIE to 0.

Bit 6 RIE	Description	
0	Receive data full interrupt request (RXI) and receive error interrupt request (ERI) disabled	(initial value)
1	Receive data full interrupt request (RXI) and receive error interrupt request (ERI) enabled	

Bit 5—Transmit Enable (TE)

Bit 5 selects enabling or disabling of the start of transmit operation.

Bit 5 TE	Description	
0	Transmit operation disabled*1 (TXD32 pin is I/O port)	(initial value)
1	Transmit operation enabled*2 (TXD32 pin is transmit data pin)	

Notes: 1. Bit TDRE in SSR is fixed at 1.
2. When transmit data is written to TDR in this state, bit TDRE in SSR is cleared to 0 and serial data transmission is started. Be sure to carry out serial mode register (SMR) settings, and setting of bit SPC32 in SPCR, to decide the transmission format before setting bit TE to 1.

Bit 4—Receive Enable (RE)

Bit 4 selects enabling or disabling of the start of receive operation.

Bit 4 RE	Description	
0	Receive operation disabled*1 (RXD32 pin is I/O port)	(initial value)
1	Receive operation enabled*2 (RXD32 pin is receive data pin)	

Notes: 1. Note that the RDRF, FER, PER, and OER flags in SSR are not affected when bit RE is cleared to 0, and retain their previous state.
2. In this state, serial data reception is started when a start bit is detected in asynchronous mode or serial clock input is detected in synchronous mode. Be sure to carry out serial mode register (SMR) settings to decide the reception format before setting bit RE to 1.

Bit 3—Reserved (MPIE)

It's a reserved bit.

Bit 2—Transmit End Interrupt Enable (TEIE)

Bit 2 selects enabling or disabling of the transmit end interrupt request (TEI) if there is no valid transmit data in TDR when MSB data is to be sent.

Bit 2 TEIE	Description	
0	Transmit end interrupt request (TEI) disabled	(initial value)
1	Transmit end interrupt request (TEI) enabled*	

Note: * TEI can be released by clearing bit TDRE to 0 and clearing bit TEND to 0 in SSR, or by clearing bit TEIE to 0.

Bits 1 and 0—Clock Enable 1 and 0 (CKE1, CKE0)

Bits 1 and 0 select the clock source and enabling or disabling of clock output from the SCK_{32} pin. The combination of CKE1 and CKE0 determines whether the SCK_{32} pin functions as an I/O port, a clock output pin, or a clock input pin.

The CKE0 bit setting is only valid in case of internal clock operation (CKE1 = 0) in asynchronous mode. In synchronous mode, or when external clock operation is used (CKE1 = 1), bit CKE0 should be cleared to 0.

After setting bits CKE1 and CKE0, set the operating mode in the serial mode register (SMR).

For details on clock source selection, see table 10.9.

Bit 1 CKE1	Bit 0 CKE0	Description		
		Communication Mode	**Clock Source**	**SCK_{32} Pin Function**
0	0	Asynchronous	Internal clock	I/O port*1
		Synchronous	Internal clock	Serial clock output*1
0	1	Asynchronous	Internal clock	Clock output*2
		Synchronous	Reserved	
1	0	Asynchronous	External clock	Clock input*3
		Synchronous	External clock	Serial clock input
1	1	Asynchronous	Reserved	
		Synchronous	Reserved	

Notes: 1. Initial value
2. A clock with the same frequency as the bit rate is output.
3. Input a clock with a frequency 16 times the bit rate.

10.2.7 Serial Status Register (SSR)

Bit	7	6	5	4	3	2	1	0
	TDRE	RDRF	OER	FER	PER	TEND	MPBR	MPBT
Initial value	1	0	0	0	0	1	0	0
Read/Write	R/(W)*	R/(W)*	R/(W)*	R/(W)*	R/(W)*	R	R	R/W

Note: * Only a write of 0 for flag clearing is possible.

SSR is an 8-bit register containing status flags that indicate the operational status of SCI3.

SSR can be read or written to by the CPU at any time, but 1 cannot be written to bits TDRE, RDRF, OER, PER, and FER.

Bits TEND and MPBR are read-only bits, and cannot be modified.

SSR is initialized to H'84 upon reset, and in standby, module standby, or watch mode.

Bit 7—Transmit Data Register Empty (TDRE)

Bit 7 indicates that transmit data has been transferred from TDR to TSR.

Bit 7 TDRE	Description
0	Transmit data written in TDR has not been transferred to TSR Clearing conditions: After reading TDRE = 1, cleared by writing 0 to TDRE When data is written to TDR by an instruction
1	Transmit data has not been written to TDR, or transmit data written in TDR has been transferred to TSR Setting conditions: When bit TE in SCR3 is cleared to 0 When data is transferred from TDR to TSR (initial value)

Bit 6—Receive Data Register Full (RDRF)

Bit 6 indicates that received data is stored in RDR.

Bit 6 RDRF	Description	
0	There is no receive data in RDR Clearing conditions: After reading RDRF = 1, cleared by writing 0 to RDRF When RDR data is read by an instruction	(initial value)
1	There is receive data in RDR Setting condition: When reception ends normally and receive data is transferred from RSR to RDR	

Note: If an error is detected in the receive data, or if the RE bit in SCR3 has been cleared to 0, RDR and bit RDRF are not affected and retain their previous state.
Note that if data reception is completed while bit RDRF is still set to 1, an overrun error (OER) will result and the receive data will be lost.

Bit 5—Overrun Error (OER)

Bit 5 indicates that an overrun error has occurred during reception.

Bit 5 OER	Description	
0	Reception in progress or completed*1 Clearing condition: After reading OER = 1, cleared by writing 0 to OER	(initial value)
1	An overrun error has occurred during reception*2 Setting condition: When reception is completed with RDRF set to 1	

Notes:
1. When bit RE in SCR3 is cleared to 0, bit OER is not affected and retains its previous state.
2. RDR retains the receive data it held before the overrun error occurred, and data received after the error is lost. Reception cannot be continued with bit OER set to 1, and in synchronous mode, transmission cannot be continued either.

Bit 4—Framing Error (FER)

Bit 4 indicates that a framing error has occurred during reception in asynchronous mode.

Bit 4 FER	Description
0	Reception in progress or completed*1 (initial value) Clearing condition: After reading FER = 1, cleared by writing 0 to FER
1	A framing error has occurred during reception Setting condition: When the stop bit at the end of the receive data is checked for a value of 1 at the end of reception, and the stop bit is 0*2

Notes: 1. When bit RE in SCR3 is cleared to 0, bit FER is not affected and retains its previous state.

2. Note that, in 2-stop-bit mode, only the first stop bit is checked for a value of 1, and the second stop bit is not checked. When a framing error occurs the receive data is transferred to RDR but bit RDRF is not set. Reception cannot be continued with bit FER set to 1. In synchronous mode, neither transmission nor reception is possible when bit FER is set to 1.

Bit 3—Parity Error (PER)

Bit 3 indicates that a parity error has occurred during reception with parity added in asynchronous mode.

Bit 3 PER	Description
0	Reception in progress or completed*1 (initial value) Clearing condition: After reading PER = 1, cleared by writing 0 to PER
1	A parity error has occurred during reception*2 Setting condition: When the number of 1 bits in the receive data plus parity bit does not match the parity designated by bit PM in the serial mode register (SMR)

Notes: 1. When bit RE in SCR3 is cleared to 0, bit PER is not affected and retains its previous state.

2. Receive data in which a parity error has occurred is still transferred to RDR, but bit RDRF is not set. Reception cannot be continued with bit PER set to 1. In synchronous mode, neither transmission nor reception is possible when bit FER is set to 1.

Bit 2—Transmit End (TEND)

Bit 2 indicates that bit TDRE is set to 1 when the last bit of a transmit character is sent.

Bit 2 is a read-only bit and cannot be modified.

Bit 2 TEND	Description
0	Transmission in progress Clearing conditions: After reading TDRE = 1, cleared by writing 0 to TDRE When data is written to TDR by an instruction
1	Transmission ended (initial value) Setting conditions: When bit TE in SCR3 is cleared to 0 When bit TDRE is set to 1 when the last bit of a transmit character is sent

Bit 1—Reserved (MPBR)

It's a reserved read-only bit.

Bit 0—Reserved (MPBT)

The write value should always be 0.

10.2.8 Bit Rate Register (BRR)

Bit	7	6	5	4	3	2	1	0
	BRR7	BRR6	BRR5	BRR4	BRR3	BRR2	BRR1	BRR0
Initial value	1	1	1	1	1	1	1	1
Read/Write	R/W	R/W	R/W	R/W	R/W	R/W	R/W	R/W

BRR is an 8-bit register that designates the transmit/receive bit rate in accordance with the baud rate generator operating clock selected by bits CKS1 and CKS0 of the serial mode register (SMR).

BRR can be read or written by the CPU at any time.

BRR is initialized to H'FF upon reset, and in standby, module standby, or watch mode.

Table 10.3 shows examples of BRR settings in asynchronous mode. The values shown are for active (high-speed) mode.

Table 10.3 Examples of BRR Settings for Various Bit Rates (Asynchronous Mode) (1)

	ϕ														
	16.4 kHz			19.2 kHz			1 MHz			1.2288 MHz			2 MHz		
Bit Rate (bit/s)	n	N	Error (%)	n	N	Error (%)	n	N	Error (%)	n	N	Error (%)	n	N	Error (%)
110	—	—	—	—	—	—	2	17	–1.36	2	21	–0.83	3	8	–1.36
150	—	—	—	0	3	0	2	12	0.16	3	3	0	2	25	0.16
200	—	—	—	0	2	0	2	9	–2.34	3	2	0	3	4	–2.34
250	0	1	2.5	—	—	—	3	1	–2.34	0	153	–0.26	2	15	–2.34
300	—	—	—	0	1	0	0	103	0.16	3	1	0	2	12	0.16
600	—	—	—	0	0	0	0	51	0.16	3	0	0	0	103	0.16
1200				—	—	—	0	25	0.16	2	1	0	0	51	0.16
2400				—	—	—	0	12	0.16	2	0	0	0	25	0.16
4800				—	—	—	—	—	—	0	7	0	0	12	0.16
9600				—	—	—	—	—	—	0	3	0	—	—	—
19200				—	—	—	—	—	—	0	1	0	—	—	—
31250				—	—	—	0	0	0	—	—	—	0	1	0
38400				—	—	—	—	—	—	0	0	0	—	—	—

Table 10.3 Examples of BRR Settings for Various Bit Rates (Asynchronous Mode) (2)

	ϕ								
	5 MHz			8 MHz			10 MHz		
Bit Rate (bit/s)	n	N	Error (%)	n	N	Error (%)	n	N	Error (%)
110	3	21	0.88	3	35	–1.36	3	43	0.88
150	3	15	1.73	3	25	0.16	3	32	–1.36
200	3	11	1.73	3	19	–2.34	3	23	1.73
250	3	9	–2.34	3	15	–2.34	3	19	–2.34
300	3	7	1.73	3	12	0.16	3	15	1.73
600	3	3	1.73	2	25	0.16	3	7	1.73
1200	3	1	1.73	2	12	0.16	3	3	1.73
2400	3	0	1.73	0	103	0.16	3	1	1.73
4800	2	1	1.73	0	51	0.16	3	0	1.73
9600	2	0	173	0	25	0.16	2	1	1.73
19200	0	7	1.73	0	12	0.16	2	0	1.73
31250	0	4	0	0	7	0	0	9	0
38400	0	3	1.73	—	—	—	0	7	1.73

Notes: No indication: Setting not possible.
—: Setting possible, but errors may result.

1. The value set in BRR is given by the following equation:

$$N = \frac{\phi}{(32 \times 2^{2n} \times B)} - 1$$

where B: Bit rate (bit/s)
N: Baud rate generator BRR setting ($0 \leq N \leq 255$)
ϕ: System clock frequency
n: Baud rate generator input clock number (n = 0, 2, or 3)
(The relation between n and the clock is shown in table 10.4.)

2. The error in table 10.3 is the value obtained from the following equation, rounded to two decimal places.

$$\text{Error (\%)} = \frac{\text{B (rate obtained from n, N, OSC)} - \text{R(bit rate in left-hand column in table 10.3.)}}{\text{R (bit rate in left-hand column in table 10.3.)}} \times 100$$

Table 10.4 Relation between n and Clock

		SMR Setting	
n	**Clock**	**CKS1**	**CKS0**
0	ϕ	0	0
0	ϕw/2*1/ϕw*2	0	1
2	ϕ/16	1	0
3	ϕ/64	1	1

Notes: 1. ϕ w/2 clock in active (medium-speed/high-speed) mode and sleep mode
2. ϕ w clock in subactive mode and subsleep mode
In subactive or subsleep mode, SCI3 can be operated when CPU clock is ϕw/2 only.

Table 10.5 shows the maximum bit rate for each frequency. The values shown are for active (high-speed) mode.

Table 10.5 Maximum Bit Rate for Each Frequency (Asynchronous Mode)

			Setting	
OSC (MHz)	**ϕ (MHz)**	**Maximum Bit Rate (bit/s)**	**n**	**N**
0.0384*	0.0192	600	0	0
2	1	31250	0	0
2.4576	1.2288	38400	0	0
4	2	62500	0	0
10	5	156250	0	0
16	8	250000	0	0
20	10	312500	0	0

Note: * When SMR is set up to CKS1 = 0, CKS0 = 1.

Table 10.6 shows examples of BRR settings in synchronous mode. The values shown are for active (high-speed) mode.

Table 10.6 Examples of BRR Settings for Various Bit Rates (Synchronous Mode) (1)

Bit Rate (bit/s)	ϕ								
	19.2 kHz			1 MHz			2 MHz		
	n	N	Error	n	N	Error	n	N	Error
200	0	23	0	—	—	—	—	—	—
250	—	—	—	—	—	—	2	124	0
300	2	0	0	—	—	—	—	—	—
500				—	—	—	—	—	—
1K				0	249	0	—	—	—
2.5K				0	99	0	0	199	0
5K				0	49	0	0	99	0
10K				0	24	0	0	49	0
25K				0	9	0	0	19	0
50K				0	4	0	0	9	0
100K				—	—	—	0	4	0
250K				0	0	0	0	1	0
500K							0	0	0
1M									

Table 10.6 Examples of BRR Settings for Various Bit Rates (Synchronous Mode) (2)

Bit Rate (bit/s)	ϕ								
	5 MHz			8 MHz			10 MHz		
	n	N	Error	n	N	Error	n	N	Error
200	—	—	—	—	—	—	0	12499	0
250	—	—	—	3	124	0	2	624	0
300	—	—	—	—	—	—	0	8332	0
500	—	—	—	2	249	0	0	4999	0
1K	—	—	—	2	124	0	0	2499	0
2.5K	—	—	—	2	49	0	0	999	0
5K	0	249	0	2	24	0	0	499	0
10K	0	124	0	0	199	0	0	249	0
25K	0	49	0	0	79	0	0	99	0
50K	0	24	0	0	39	0	0	49	0
100K	—	—	—	0	19	0	0	24	0
250K	0	4	0	0	7	0	0	9	0
500K	—	—	—	0	3	0	0	4	0
1M	—	—	—	0	1	0	—	—	—

Blank: Cannot be set.

— : A setting can be made, but an error will result.

Notes: The value set in BRR is given by the following equation:

$$N = \frac{\phi}{(4 \times 2^{2n} \times B)} - 1$$

where B: Bit rate (bit/s)
N: Baud rate generator BRR setting ($0 \leq N \leq 255$)
ϕ: System clock frequency
n: Baud rate generator input clock number (n = 0, 2, or 3)
(The relation between n and the clock is shown in table 10.7.)

Table 10.7 Relation between n and Clock

		SMR Setting	
n	**Clock**	**CKS1**	**CKS0**
0	ϕ	0	0
0	$\phi_w/2$ *1 / ϕw *2	0	1
2	$\phi/16$	1	0
3	$\phi/64$	1	1

Notes: 1. $\phi w/2$ clock in active (medium-speed/high-speed) mode and sleep mode
2. ϕw clock in subactive mode and subsleep mode
In subactive or subsleep mode, SCI3 can be operated when CPU clock is $\phi w/2$ only.

10.2.9 Clock stop register 1 (CKSTPR1)

Bit	7	6	5	4	3	2	1	0
	—	—	S32CKSTP	ADCKSTP	TGCKSTP	TFCKSTP	TCCKSTP	TACKSTP
Initial value	1	1	1	1	1	1	1	1
Read/Write	—	—	R/W	R/W	R/W	R/W	R/W	R/W

CKSTPR1 is an 8-bit read/write register that performs module standby mode control for peripheral modules. Only the bits relating to SCI3 are described here. For details of the other bits, see the sections on the relevant modules.

Bit 5—SCI3 Module Standby Mode Control (S32CKSTP)

Bit 5 controls setting and clearing of module standby mode for SCI3.

S32CKSTP	Description	
0	SCI3 is set to module standby mode*	
1	SCI3 module standby mode is cleared	(initial value)

Note: * All SCI3 register is initialized in module standby mode.

10.2.10 Serial Port Control Register (SPCR)

Bit	7	6	5	4	3	2	1	0
	—	—	SPC32	—	SCINV3	SCINV2	—	—
Initial value	1	1	0	—	0	0	—	—
Read/Write	—	—	R/W	W	R/W	R/W	W	W

SPCR is an 8-bit readable/writable register that performs RXD_{32} and TXD_{32} pin input/output data inversion switching.

Bits 7 and 6—Reserved

Bits 7 and 6 are reserved; they are always read as 1 and cannot be modified.

Bit 5—$P4_2$/TXD_{32} Pin Function Switch (SPC32)

This bit selects whether pin $P4_2$/TXD_{32} is used as $P4_2$ or as TXD_{32}.

Bit 5 SPC32	Description	
0	Functions as $P4_2$ I/O pin	(initial value)
1	Functions as TXD_{32} output pin*	

Note: * Set the TE bit in SCR3 after setting this bit to 1.

Bit 4—Reserved

Bit 4 is reserved; only 0 can be written to this bit.

Bit 3—TXD_{32} Pin Output Data Inversion Switch

Bit 3 specifies whether or not TXD_{32} pin output data is to be inverted.

Bit 3 SCINV3	Description	
0	TXD_{32} output data is not inverted	(initial value)
1	TXD_{32} output data is inverted	

Bit 2—RXD_{32} Pin Input Data Inversion Switch

Bit 2 specifies whether or not RXD_{32} pin input data is to be inverted.

Bit 2 SCINV2	Description	
0	RXD_{32} input data is not inverted	(initial value)
1	RXD_{32} input data is inverted	

Bits 1 and 0—Reserved

Bits 1 and 0 are reserved; only 0 can written to these bits.

10.3 Operation

10.3.1 Overview

SCI3 can perform serial communication in two modes: asynchronous mode in which synchronization is provided character by character, and synchronous mode in which synchronization is provided by clock pulses. The serial mode register (SMR) is used to select asynchronous or synchronous mode and the data transfer format, as shown in table 10.8.

The clock source for SCI3 is determined by bit COM in SMR and bits CKE1 and CKE0 in SCR3, as shown in table 10.9.

Asynchronous Mode

- Choice of 5-, 7-, or 8-bit data length
- Choice of parity addition, and addition of 1 or 2 stop bits. (The combination of these parameters determines the data transfer format and the character length.)
- Framing error (FER), parity error (PER), overrun error (OER), and break detection during reception
- Choice of internal or external clock as the clock source

  When internal clock is selected: SCI3 operates on the baud rate generator clock, and a clock with the same frequency as the bit rate can be output.

  When external clock is selected: A clock with a frequency 16 times the bit rate must be input. (The on-chip baud rate generator is not used.)

Synchronous Mode

- Data transfer format: Fixed 8-bit data length
- Overrun error (OER) detection during reception
- Choice of internal or external clock as the clock source

  When internal clock is selected: SCI3 operates on the baud rate generator clock, and a serial clock is output.

  When external clock is selected: The on-chip baud rate generator is not used, and SCI3 operates on the input serial clock.

Table 10.8 SMR Settings and Corresponding Data Transfer Formats

SMR						Data Transfer Format		
Bit 7 COM	Bit 6 CHR	Bit 2 MP	Bit 5 PE	Bit 3 STOP	Mode	Data Length	Parity Bit	Stop Bit Length
0	0	0	0	0	Asynchronous mode	8-bit data	No	1 bit
				1				2 bits
			1	0			Yes	1 bit
				1				2 bits
	1		0	0		7-bit data	No	1 bit
				1				2 bits
			1	0			Yes	1 bit
				1				2 bits
	0	1	0	0		Setting prohibited		
				1				
			1	0	Asynchronous mode	5-bit data	No	1 bit
				1				2 bits
	1		0	0		Setting prohibited		
				1				
			1	0	Asynchronous mode	5-bit data	Yes	1 bit
				1				2 bits
1	*	0	*	*	Synchronous mode	8-bit data	No	No

*: Don't care

Table 10.9 SMR and SCR3 Settings and Clock Source Selection

SMR	SCR3			Transmit/Receive Clock	
Bit 7	Bit 1	Bit 0			
COM	CKE1	CKE0	Mode	Clock Source	SCK_{32} Pin Function
0	0	0	Asynchronous mode	Internal	I/O port (SCK_{32} pin not used)
		1			Outputs clock with same frequency as bit rate
	1	0		External	Inputs clock with frequency 16 times bit rate
1	0	0	Synchronous mode	Internal	Outputs serial clock
	1	0		External	Inputs serial clock
0	1	1	Reserved (Do not specify these combinations)		
1	0	1			
1	1	1			

Interrupts and Continuous Transmission/Reception

SCI3 can carry out continuous reception using RXI and continuous transmission using TXI. These interrupts are shown in table 10.10.

Table 10.10 Transmit/Receive Interrupts

Interrupt	Flags	Interrupt Request Conditions	Notes
RXI	RDRF RIE	When serial reception is performed normally and receive data is transferred from RSR to RDR, bit RDRF is set to 1, and if bit RIE is set to 1 at this time, RXI is enabled and an interrupt is requested. (See figure 10.2(a).)	The RXI interrupt routine reads the receive data transferred to RDR and clears bit RDRF to 0. Continuous reception can be performed by repeating the above operations until reception of the next RSR data is completed.
TXI	TDRE TIE	When TSR is found to be empty (on completion of the previous transmission) and the transmit data placed in TDR is transferred to TSR, bit TDRE is set to 1. If bit TIE is set to 1 at this time, TXI is enabled and an interrupt is requested. (See figure 10.2(b).)	The TXI interrupt routine writes the next transmit data to TDR and clears bit TDRE to 0. Continuous transmission can be performed by repeating the above operations until the data transferred to TSR has been transmitted.
TEI	TEND TEIE	When the last bit of the character in TSR is transmitted, if bit TDRE is set to 1, bit TEND is set to 1. If bit TEIE is set to 1 at this time, TEI is enabled and an interrupt is requested. (See figure 10.2(c).)	TEI indicates that the next transmit data has not been written to TDR when the last bit of the transmit character in TSR is sent.

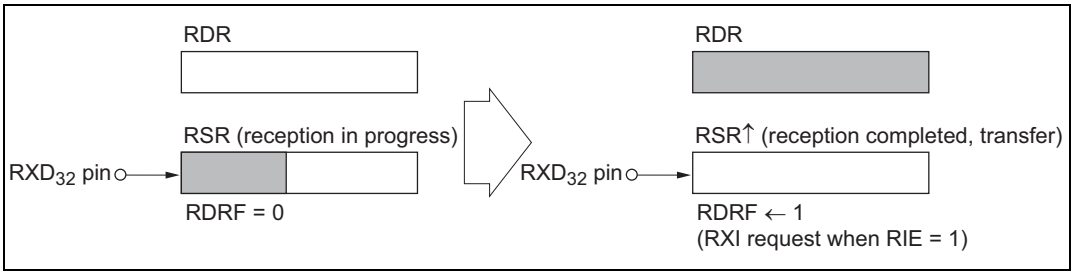

Figure 10.2(a) RDRF Setting and RXI Interrupt

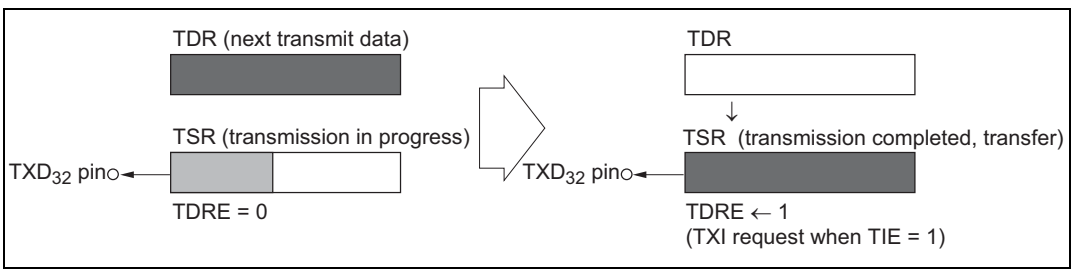

Figure 10.2(b) TDRE Setting and TXI Interrupt

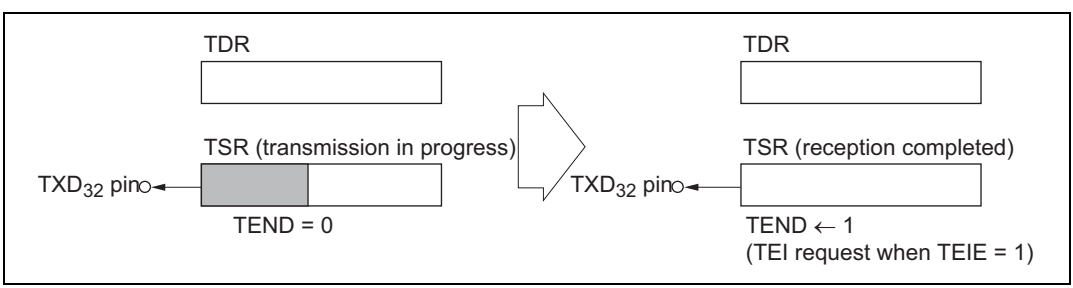

Figure 10.2(c) TEND Setting and TEI Interrupt

10.3.2 Operation in Asynchronous Mode

In asynchronous mode, serial communication is performed with synchronization provided character by character. A start bit indicating the start of communication and one or two stop bits indicating the end of communication are added to each character before it is sent.

SCI3 has separate transmission and reception units, allowing full-duplex communication. As the transmission and reception units are both double-buffered, data can be written during transmission and read during reception, making possible continuous transmission and reception.

Data Transfer Format

The general data transfer format in asynchronous communication is shown in figure 10.3.

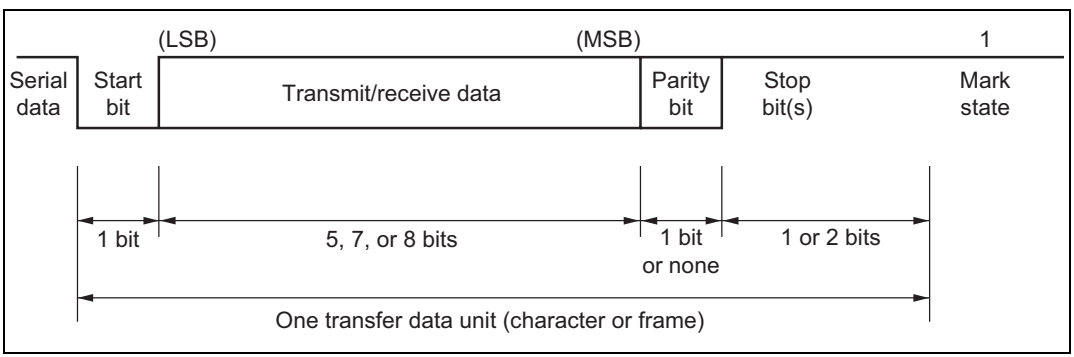

Figure 10.3 Data Format in Asynchronous Communication

In asynchronous communication, the communication line is normally in the mark state (high level). SCI3 monitors the communication line and when it detects a space (low level), identifies this as a start bit and begins serial data communication.

One transfer data character consists of a start bit (low level), followed by transmit/receive data (LSB-first format, starting from the least significant bit), a parity bit (high or low level), and finally one or two stop bits (high level).

In asynchronous mode, synchronization is performed by the falling edge of the start bit during reception. The data is sampled on the 8th pulse of a clock with a frequency 16 times the bit period, so that the transfer data is latched at the center of each bit.

Table 10.11 shows the 16 data transfer formats that can be set in asynchronous mode. The format is selected by the settings in the serial mode register (SMR).

Table 10.11 Data Transfer Formats (Asynchronous Mode)

SMR				Serial Data Transfer Format and Frame Length											
CHR	PE	MP	STOP	1	2	3	4	5	6	7	8	9	10	11	12
0	0	0	0	S	8-bit data								STOP		
0	0	0	1	S	8-bit data								STOP	STOP	
0	0	1	0	Setting prohibited											
0	0	1	1	Setting prohibited											
0	1	0	0	S	8-bit data								P	STOP	
0	1	0	1	S	8-bit data								P	STOP	STOP
0	1	1	0	S	5-bit data					STOP					
0	1	1	1	S	5-bit data					STOP	STOP				
1	0	0	0	S	7-bit data							STOP			
1	0	0	1	S	7-bit data							STOP	STOP		
1	0	1	0	Setting prohibited											
1	0	1	1	Setting prohibited											
1	1	0	0	S	7-bit data							P	STOP		
1	1	0	1	S	7-bit data							P	STOP	STOP	
1	1	1	0	S	5-bit data					P	STOP				
1	1	1	1	S	5-bit data					P	STOP	STOP			

[Legend]
S: Start bit
STOP: Stop bit
P: Parity bit
MPB: Multiprocessor bit

Clock

Either an internal clock generated by the baud rate generator or an external clock input at the SCK_{32} pin can be selected as the SCI3 transmit/receive clock. The selection is made by means of bit COM in SMR and bits SCE1 and CKE0 in SCR3. See table 10.9 for details on clock source selection.

When an external clock is input at the SCK_{32} pin, the clock frequency should be 16 times the bit rate.

When SCI3 operates on an internal clock, the clock can be output at the SCK_{32} pin. In this case the frequency of the output clock is the same as the bit rate, and the phase is such that the clock rises at the center of each bit of transmit/receive data, as shown in figure 10.4.

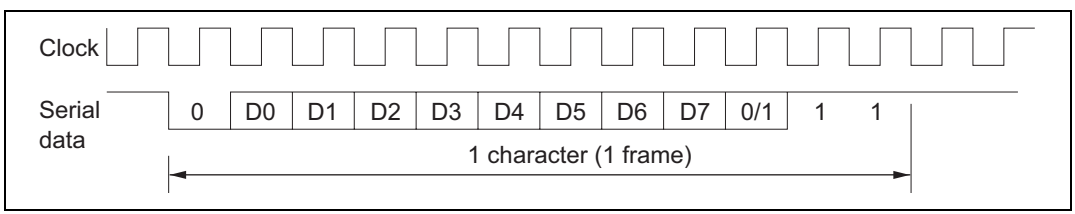

Figure 10.4 Phase Relationship between Output Clock and Transfer Data (Asynchronous Mode) (8-bit data, parity, 2 stop bits)

Data Transfer Operations

- SCI3 initialization

Before data is transferred on SCI3, bits TE and RE in SCR3 must first be cleared to 0, and then SCI3 must be initialized as follows.

Note: If the operation mode or data transfer format is changed, bits TE and RE must first be cleared to 0.
When bit TE is cleared to 0, bit TDRE is set to 1.
Note that the RDRF, PER, FER, and OER flags and the contents of RDR are retained when RE is cleared to 0.
When an external clock is used in asynchronous mode, the clock should not be stopped during operation, including initialization. When an external clock is used in synchronous mode, the clock should not be supplied during operation, including initialization.

Figure 10.5 shows an example of a flowchart for initializing SCI3.

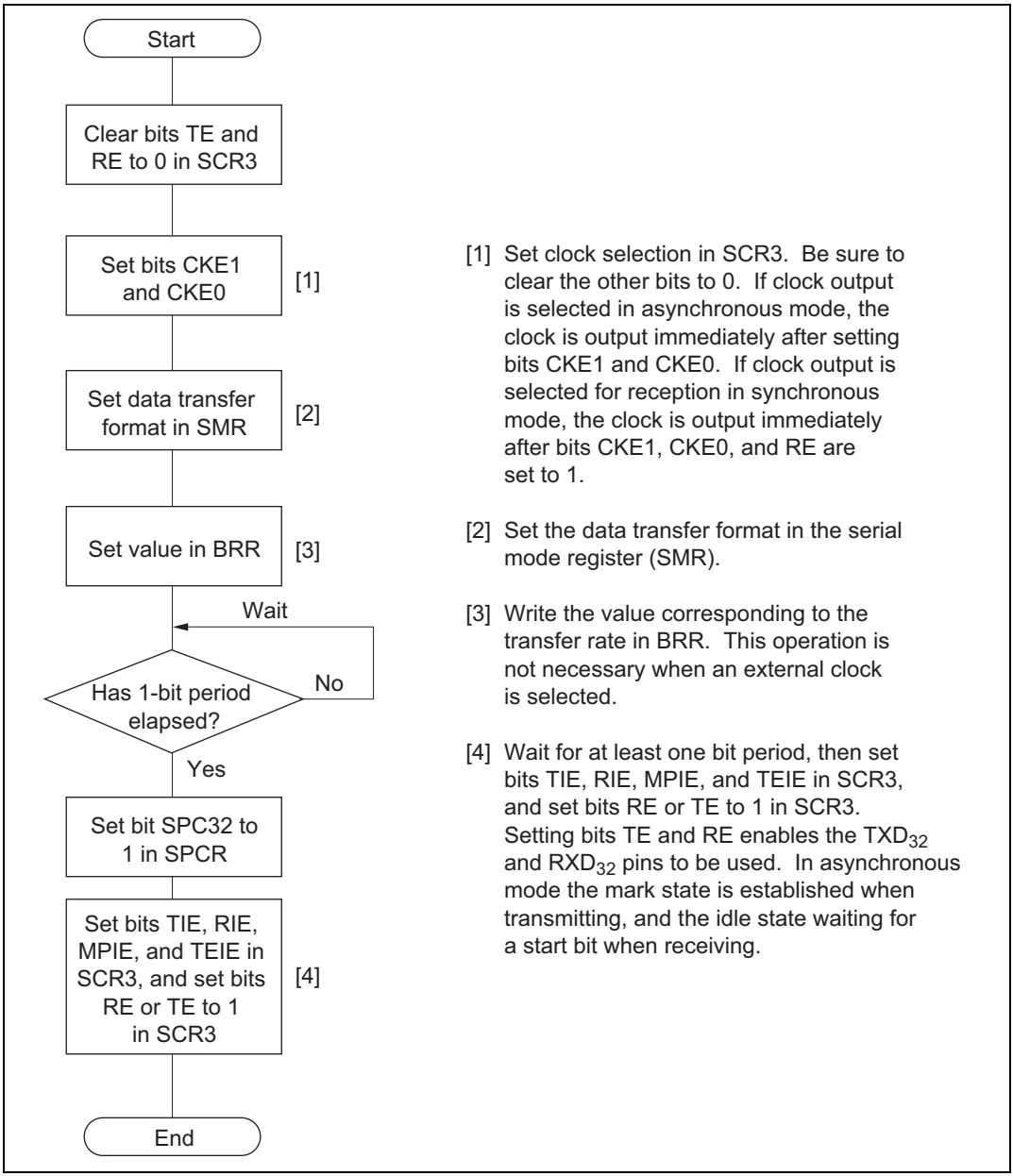

Figure 10.5 Example of SCI3 Initialization Flowchart

- Transmitting

Figure 10.6 shows an example of a flowchart for data transmission. This procedure should be followed for data transmission after initializing SCI3.

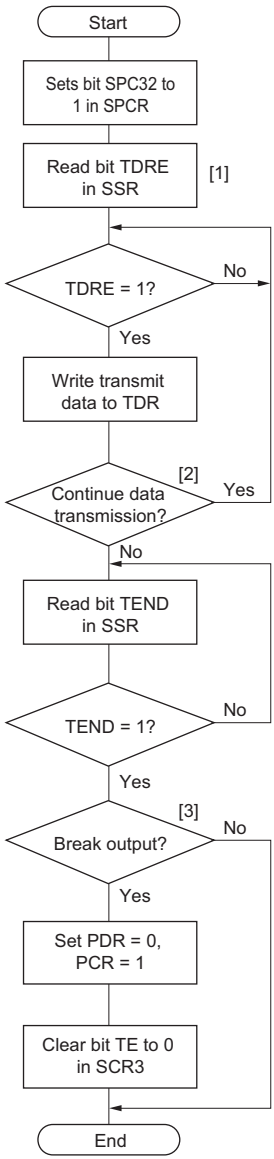

[1] Read the serial status register (SSR) and check that bit TDRE is set to 1, then write transmit data to the transmit data register (TDR). When data is written to TDR, bit TDRE is cleared to 0 automatically.
(After the TE bit is set to 1, one frame of 1s is output, then transmission is possible.)

[2] When continuing data transmission, be sure to read TDRE = 1 to confirm that a write can be performed before writing data to TDR. When data is written to TDR, bit TDRE is cleared to 0 automatically.

[3] If a break is to be output when data transmission ends, set the port PCR to 1 and clear the port PDR to 0, then clear bit TE in SCR3 to 0.

Figure 10.6 Example of Data Transmission Flowchart (Asynchronous Mode)

SCI3 operates as follows when transmitting data.

SCI3 monitors bit TDRE in SSR, and when it is cleared to 0, recognizes that data has been written to TDR and transfers data from TDR to TSR. It then sets bit TDRE to 1 and starts transmitting. If bit TIE in SCR3 is set to 1 at this time, a TXI request is made.

Serial data is transmitted from the TXD_{32} pin using the relevant data transfer format in table 10.11. When the stop bit is sent, SCI3 checks bit TDRE. If bit TDRE is cleared to 0, SCI3 transfers data from TDR to TSR, and when the stop bit has been sent, starts transmission of the next frame. If bit TDRE is set to 1, bit TEND in SSR bit is set to 1the mark state, in which 1s are transmitted, is established after the stop bit has been sent. If bit TEIE in SCR3 is set to 1 at this time, a TEI request is made.

Figure 10.7 shows an example of the operation when transmitting in asynchronous mode.

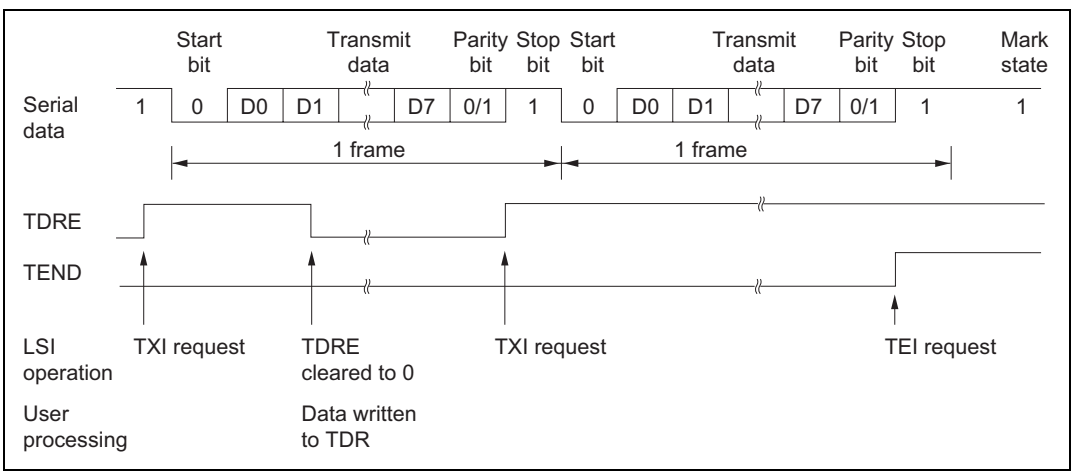

Figure 10.7 Example of Operation when Transmitting in Asynchronous Mode (8-bit data, parity, 1 stop bit)

- Receiving

Figure 10.8 shows an example of a flowchart for data reception. This procedure should be followed for data reception after initializing SCI3.

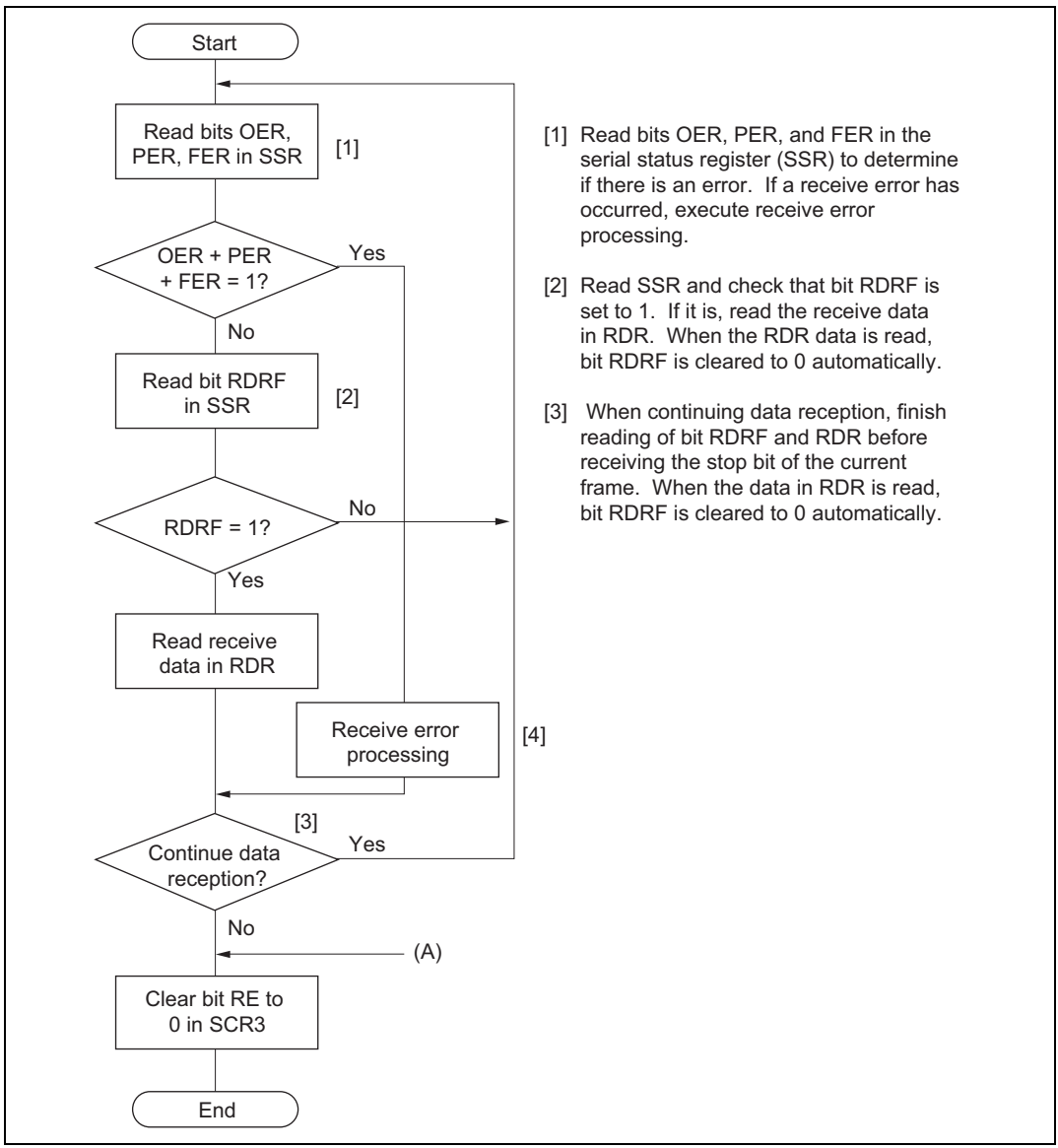

Figure 10.8 Example of Data Reception Flowchart (Asynchronous Mode)

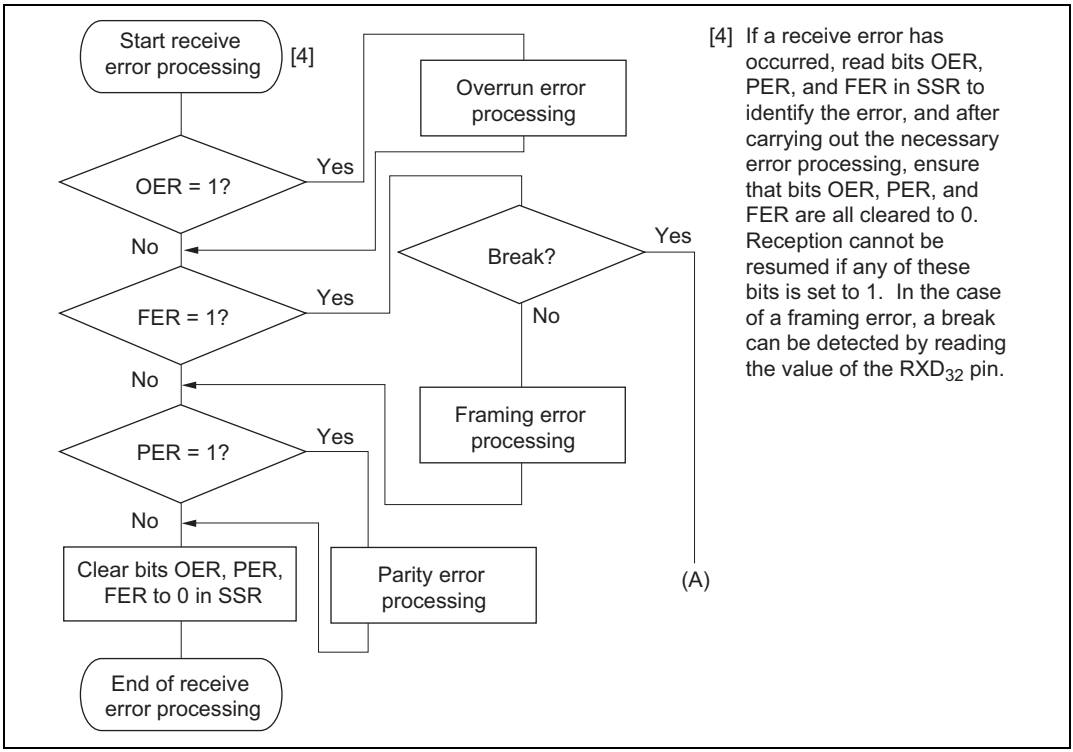

Figure 10.8 Example of Data Reception Flowchart (Asynchronous Mode) (cont)

SCI3 operates as follows when receiving data.

SCI3 monitors the communication line, and when it detects a 0 start bit, performs internal synchronization and begins reception. Reception is carried out in accordance with the relevant data transfer format in table 10.11. The received data is first placed in RSR in LSB-to-MSB order, and then the parity bit and stop bit(s) are received. SCI3 then carries out the following checks.

- Parity check
  SCI3 checks that the number of 1 bits in the receive data conforms to the parity (odd or even) set in bit PM in the serial mode register (SMR).
- Stop bit check
  SCI3 checks that the stop bit is 1. If two stop bits are used, only the first is checked.
- Status check
  SCI3 checks that bit RDRF is set to 0, indicating that the receive data can be transferred from RSR to RDR.

If no receive error is found in the above checks, bit RDRF is set to 1, and the receive data is stored in RDR. If bit RIE is set to 1 in SCR3, an RXI interrupt is requested. If the error checks identify a receive error, bit OER, PER, or FER is set to 1 depending on the kind of error. Bit RDRF retains its state prior to receiving the data. If bit RIE is set to 1 in SCR3, an ERI interrupt is requested.

Table 10.12 shows the conditions for detecting a receive error, and receive data processing.

Note: No further receive operations are possible while a receive error flag is set. Bits OER, FER, PER, and RDRF must therefore be cleared to 0 before resuming reception.

Table 10.12 Receive Error Detection Conditions and Receive Data Processing

Receive Error	Abbr.	Detection Conditions	Receive Data Processing
Overrun error	OER	When the next date receive operation is completed while bit RDRF is still set to 1 in SSR	Receive data is not transferred from RSR to RDR
Framing error	FER	When the stop bit is 0	Receive data is transferred from RSR to RDR
Parity error	PER	When the parity (odd or even) set in SMR is different from that of the received data	Receive data is transferred from RSR to RDR

Figure 10.9 shows an example of the operation when receiving in asynchronous mode.

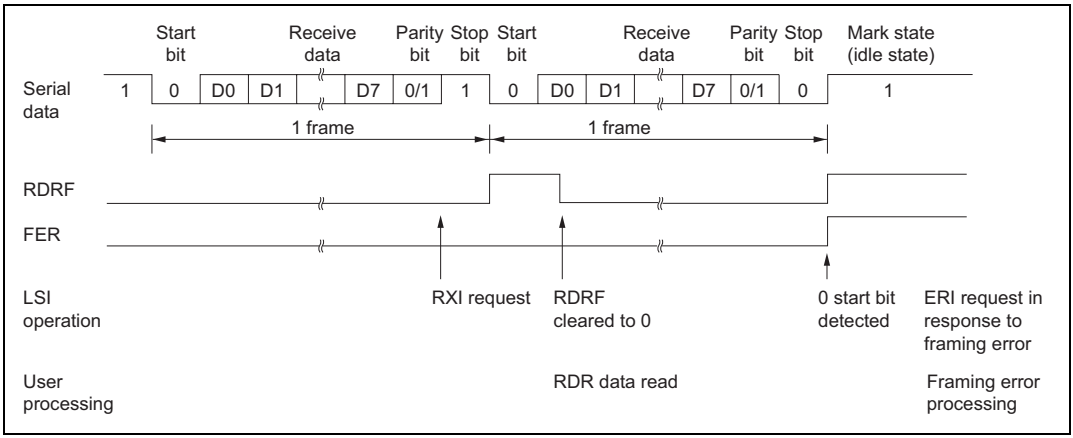

Figure 10.9 Example of Operation when Receiving in Asynchronous Mode (8-Bit Data, Parity, 1 Stop Bit)

10.3.3 Operation in Synchronous Mode

In synchronous mode, SCI3 transmits and receives data in synchronization with clock pulses. This mode is suitable for high-speed serial communication.

SCI3 has separate transmission and reception units, allowing full-duplex communication with a shared clock.

As the transmission and reception units are both double-buffered, data can be written during transmission and read during reception, making possible continuous transmission and reception.

Data Transfer Format

The general data transfer format in asynchronous communication is shown in figure 10.10.

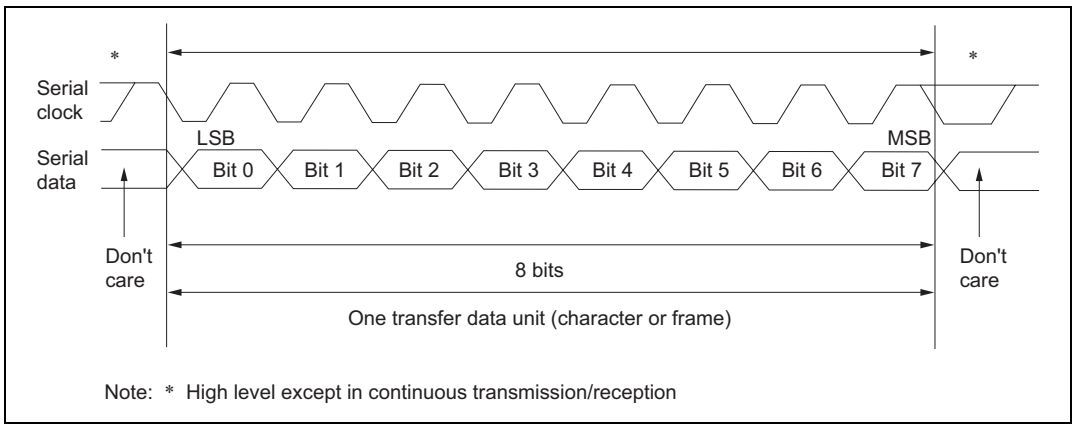

Figure 10.10 Data Format in Synchronous Communication

In synchronous communication, data on the communication line is output from one falling edge of the serial clock until the next falling edge. Data confirmation is guaranteed at the rising edge of the serial clock.

One transfer data character begins with the LSB and ends with the MSB. After output of the MSB, the communication line retains the MSB state.

When receiving in synchronous mode, SCI3 latches receive data at the rising edge of the serial clock.

The data transfer format uses a fixed 8-bit data length.

Parity bit cannot be added.

Clock

Either an internal clock generated by the baud rate generator or an external clock input at the SCK_{32} pin can be selected as the SCI3 serial clock. The selection is made by means of bit COM in SMR and bits CKE1 and CKE0 in SCR3. See table 10.9 for details on clock source selection.

When SCI3 operates on an internal clock, the serial clock is output at the SCK_{32} pin. Eight pulses of the serial clock are output in transmission or reception of one character, and when SCI3 is not transmitting or receiving, the clock is fixed at the high level.

Data Transfer Operations

- SCI3 initialization

Data transfer on SCI3 first of all requires that SCI3 be initialized as described in section 10.3.2, SCI3 initialization, and shown in figure 10.5.

- Transmitting

Figure 10.11 shows an example of a flowchart for data transmission. This procedure should be followed for data transmission after initializing SCI3.

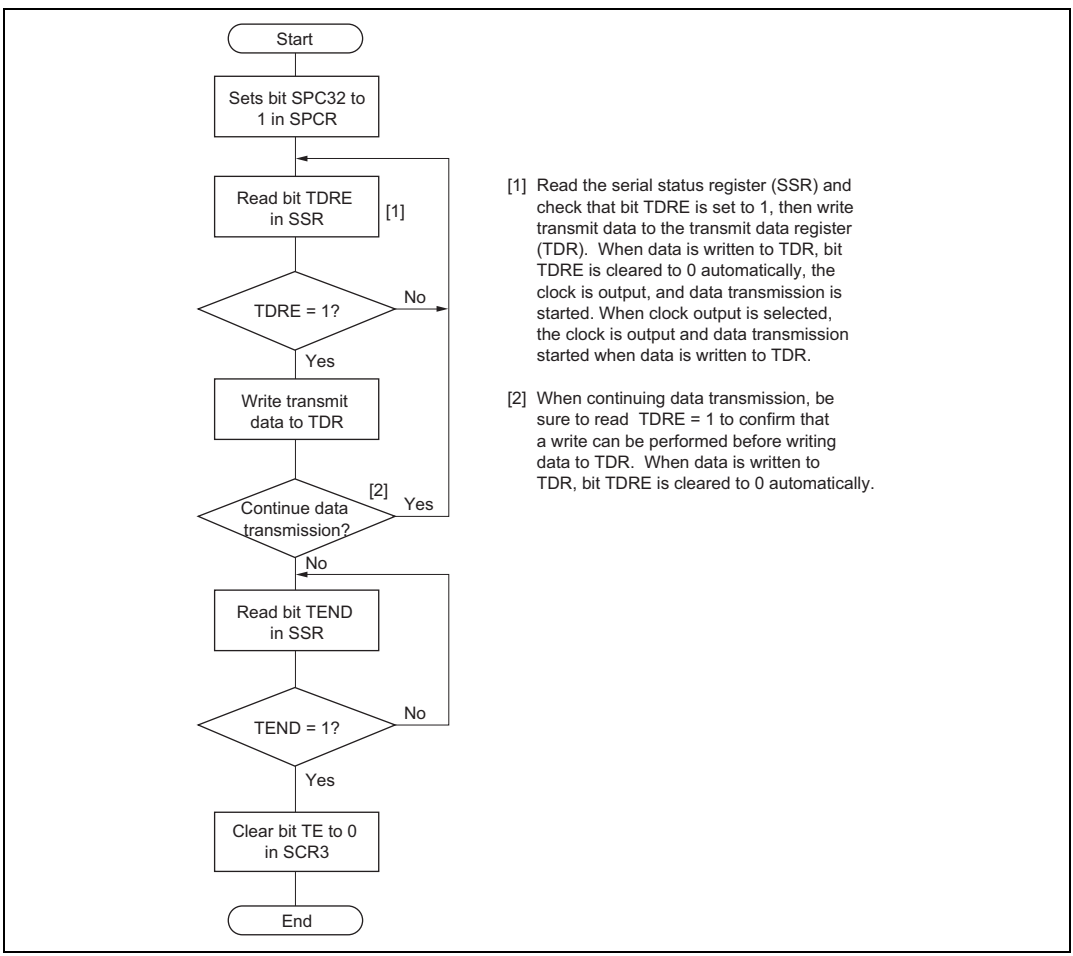

Figure 10.11 Example of Data Transmission Flowchart (Synchronous Mode)

SCI3 operates as follows when transmitting data.

SCI3 monitors bit TDRE in SSR, and when it is cleared to 0, recognizes that data has been written to TDR and transfers data from TDR to TSR. It then sets bit TDRE to 1 and starts transmitting. If bit TIE in SCR3 is set to 1 at this time, a TXI request is made.

When clock output mode is selected, SCI3 outputs 8 serial clock pulses. When an external clock is selected, data is output in synchronization with the input clock.

Serial data is transmitted from the TXD32 pin in order from the LSB (bit 0) to the MSB (bit 7). When the MSB (bit 7) is sent, checks bit TDRE. If bit TDRE is cleared to 0, SCI3 transfers data from TDR to TSR, and starts transmission of the next frame. If bit TDRE is set to 1, SCI3 sets bit TEND to 1 in SSR, and after sending the MSB (bit 7), retains the MSB state. If bit TEIE in SCR3 is set to 1 at this time, a TEI request is made.

After transmission ends, the SCK pin is fixed at the high level.

Note: Transmission is not possible if an error flag (OER, FER, or PER) that indicates the data reception status is set to 1. Check that these error flags are all cleared to 0 before a transmit operation.

Figure 10.12 shows an example of the operation when transmitting in synchronous mode.

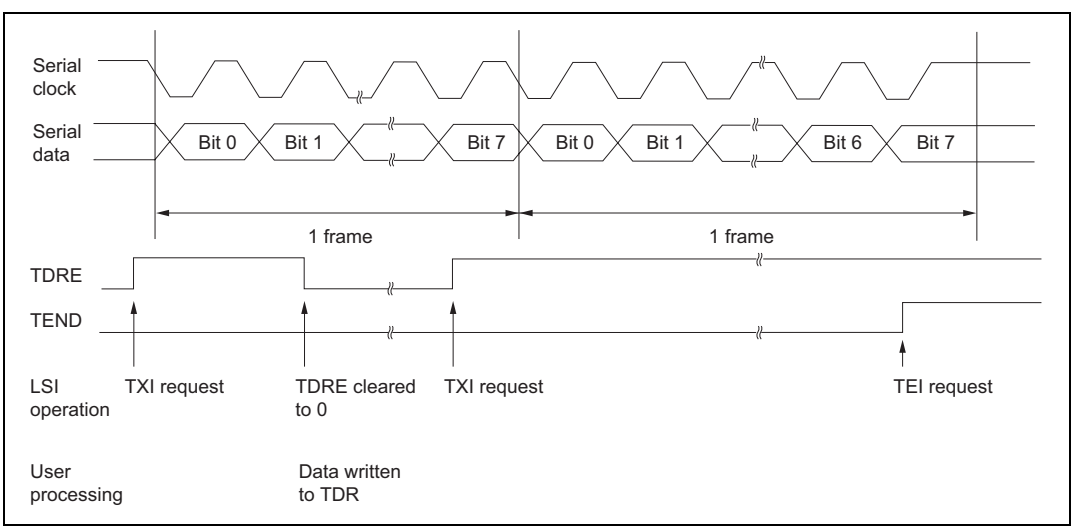

Figure 10.12 Example of Operation when Transmitting in Synchronous Mode

- Receiving

Figure 10.13 shows an example of a flowchart for data reception. This procedure should be followed for data reception after initializing SCI3.

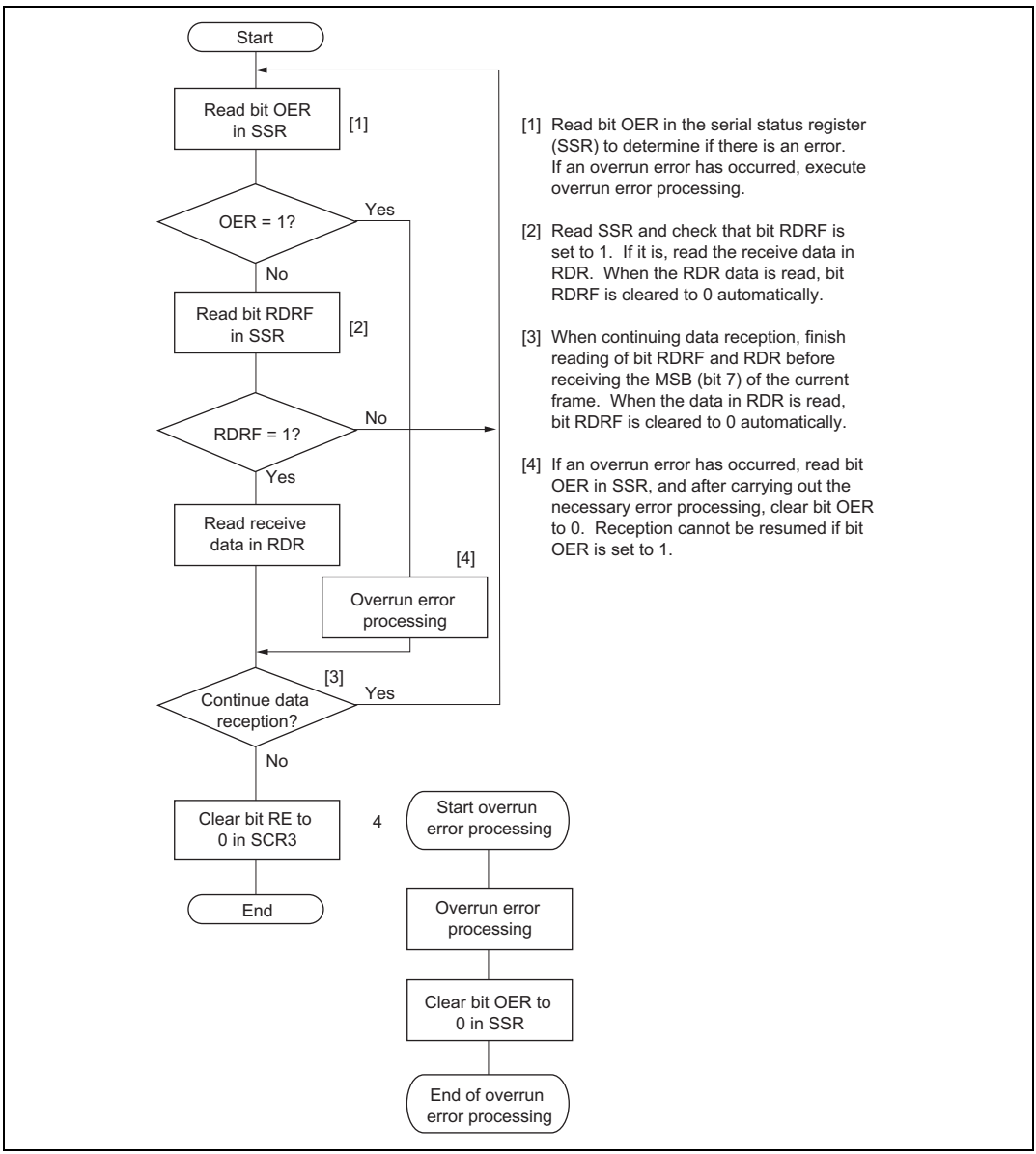

Figure 10.13 Example of Data Reception Flowchart (Synchronous Mode)

SCI3 operates as follows when receiving data.

SCI3 performs internal synchronization and begins reception in synchronization with the serial clock input or output.

The received data is placed in RSR in LSB-to-MSB order.

After the data has been received, SCI3 checks that bit RDRF is set to 0, indicating that the receive data can be transferred from RSR to RDR.

If this check shows that there is no overrun error, bit RDRF is set to 1, and the receive data is stored in RDR. If bit RIE is set to 1 in SCR3, an RXI interrupt is requested. If the check identifies an overrun error, bit OER is set to 1.

Bit RDRF remains set to 1. If bit RIE is set to 1 in SCR3, an ERI interrupt is requested.

See table 10.12 for the conditions for detecting a receive error, and receive data processing.

Note: No further receive operations are possible while a receive error flag is set. Bits OER, FER, PER, and RDRF must therefore be cleared to 0 before resuming reception.

Figure 10.14 shows an example of the operation when receiving in synchronous mode.

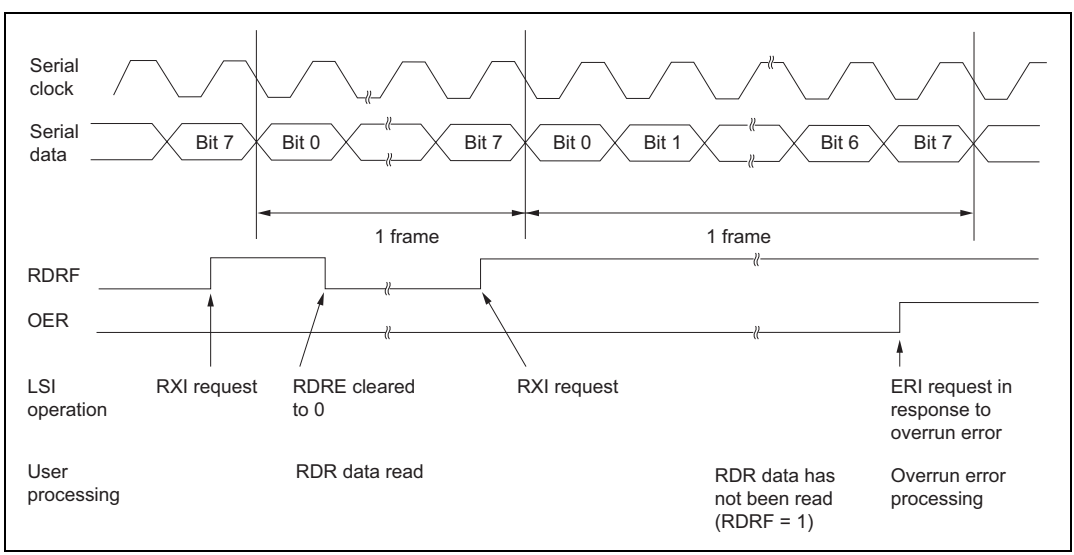

Figure 10.14 Example of Operation when Receiving in Synchronous Mode

- Simultaneous transmit/receive

Figure 10.15 shows an example of a flowchart for a simultaneous transmit/receive operation. This procedure should be followed for simultaneous transmission/reception after initializing SCI3.

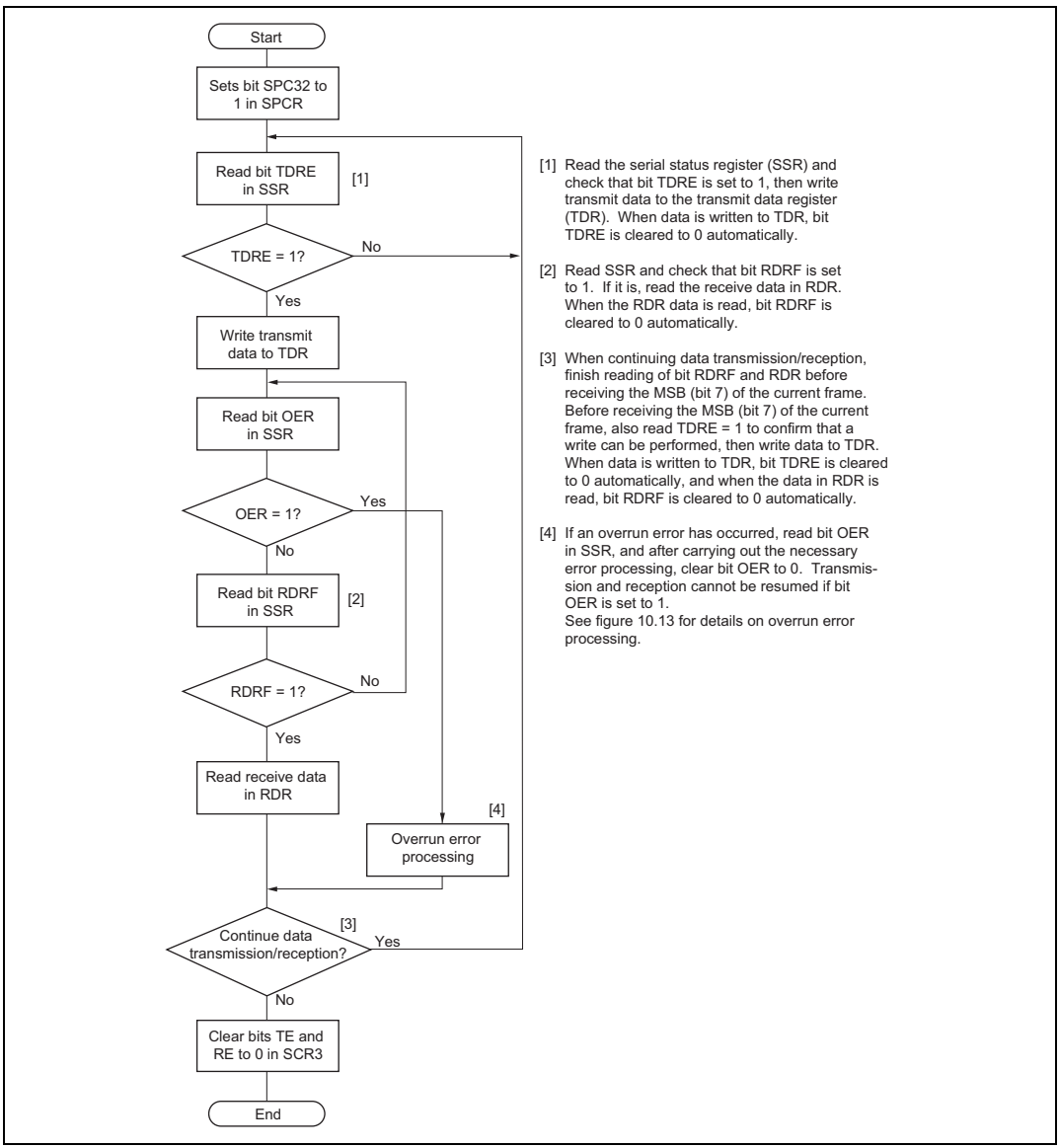

Figure 10.15 Example of Simultaneous Data Transmission/Reception Flowchart (Synchronous Mode)

Notes: 1. When switching from transmission to simultaneous transmission/reception, check that SCI3 has finished transmitting and that bits TDRE and TEND are set to 1, clear bit TE to 0, and then set bits TE and RE to 1 simultaneously.

2. When switching from reception to simultaneous transmission/reception, check that SCI3 has finished receiving, clear bit RE to 0, then check that bit RDRF and the error flags (OER, FER, and PER) are cleared to 0, and finally set bits TE and RE to 1 simultaneously.

10.4 Interrupts

SCI3 can generate six kinds of interrupts: transmit end, transmit data empty, receive data full, and three receive error interrupts (overrun error, framing error, and parity error). These interrupts have the same vector address.

The various interrupt requests are shown in table 10.13.

Table 10.13 SCI3 Interrupt Requests

Interrupt Abbr.	Interrupt Request	Vector Address
RXI	Interrupt request initiated by receive data full flag (RDRF)	H'0024
TXI	Interrupt request initiated by transmit data empty flag (TDRE)	
TEI	Interrupt request initiated by transmit end flag (TEND)	
ERI	Interrupt request initiated by receive error flag (OER, FER, PER)	

Each interrupt request can be enabled or disabled by means of bits TIE and RIE in SCR3.

When bit TDRE is set to 1 in SSR, a TXI interrupt is requested. When bit TEND is set to 1 in SSR, a TEI interrupt is requested. These two interrupts are generated during transmission.

The initial value of bit TDRE in SSR is 1. Therefore, if the transmit data empty interrupt request (TXI) is enabled by setting bit TIE to 1 in SCR3 before transmit data is transferred to TDR, a TXI interrupt will be requested even if the transmit data is not ready.

Also, the initial value of bit TEND in SSR is 1. Therefore, if the transmit end interrupt request (TEI) is enabled by setting bit TEIE to 1 in SCR3 before transmit data is transferred to TDR, a TEI interrupt will be requested even if the transmit data has not been sent.

Effective use of these interrupt requests can be made by having processing that transfers transmit data to TDR carried out in the interrupt service routine.

To prevent the generation of these interrupt requests (TXI and TEI), on the other hand, the enable bits for these interrupt requests (bits TIE and TEIE) should be set to 1 after transmit data has been transferred to TDR.

When bit RDRF is set to 1 in SSR, an RXI interrupt is requested, and if any of bits OER, PER, and FER is set to 1, an ERI interrupt is requested. These two interrupt requests are generated during reception.

For further details, see section 3.3, Interrupts.

10.5 Application Notes

The following points should be noted when using SCI3.

1. Relation between writes to TDR and bit TDRE

Bit TDRE in the serial status register (SSR) is a status flag that indicates that data for serial transmission has not been prepared in TDR. When data is written to TDR, bit TDRE is cleared to 0 automatically. When SCI3 transfers data from TDR to TSR, bit TDRE is set to 1.

Data can be written to TDR irrespective of the state of bit TDRE, but if new data is written to TDR while bit TDRE is cleared to 0, the data previously stored in TDR will be lost of it has not yet been transferred to TSR. Accordingly, to ensure that serial transmission is performed dependably, you should first check that bit TDRE is set to 1, then write the transmit data to TDR once only (not two or more times).

2. Operation when a number of receive errors occur simultaneously

If a number of receive errors are detected simultaneously, the status flags in SSR will be set to the states shown in table 10.14. If an overrun error is detected, data transfer from RSR to RDR will not be performed, and the receive data will be lost.

Table 10.14 SSR Status Flag States and Receive Data Transfer

SSR Status Flags				Receive Data Transfer	
RDRF*	OER	FER	PER	RSR → RDR	Receive Error Status
1	1	0	0	X	Overrun error
0	0	1	0	O	Framing error
0	0	0	1	O	Parity error
1	1	1	0	X	Overrun error + framing error
1	1	0	1	X	Overrun error + parity error
0	0	1	1	O	Framing error + parity error
1	1	1	1	X	Overrun error + framing error + parity error

O : Receive data is transferred from RSR to RDR.

X : Receive data is not transferred from RSR to RDR.

Note: * Bit RDRF retains its state prior to data reception. However, note that if RDR is read after an overrun error has occurred in a frame because reading of the receive data in the previous frame was delayed, RDRF will be cleared to 0.

3. Break detection and processing

When a framing error is detected, a break can be detected by reading the value of the RXD_{32} pin directly. In a break, the input from the RXD_{32} pin becomes all 0s, with the result that bit FER is set and bit PER may also be set.

SCI3 continues the receive operation even after receiving a break. Note, therefore, that even though bit FER is cleared to 0 it will be set to 1 again.

4. Mark state and break detection

When bit TE is cleared to 0, the TXD_{32} pin functions as an I/O port whose input/output direction and level are determined by PDR and PCR. This fact can be used to set the TXD_{32} pin to the mark state, or to detect a break during transmission.

To keep the communication line in the mark state (1 state) until bit TE is set to 1, set PCR = 1 and PDR = 1. Since bit TE is cleared to 0 at this time, the TXD_{32} pin functions as an I/O port and 1 is output.

To detect a break, clear bit TE to 0 after setting PCR = 1 and PDR = 0.

When bit TE is cleared to 0, the transmission unit is initialized regardless of the current transmission state, the TXD_{32} pin functions as an I/O port, and 0 is output from the TXD_{32} pin.

5. Receive error flags and transmit operation (synchronous mode only)

When a receive error flag (OER, PER, or FER) is set to 1, transmission cannot be started even if bit TDRE is cleared to 0. The receive error flags must be cleared to 0 before starting transmission.

Note also that receive error flags cannot be cleared to 0 even if bit RE is cleared to 0.

6. Receive data sampling timing and receive margin in asynchronous mode

In asynchronous mode, SCI3 operates on a basic clock with a frequency 16 times the transfer rate. When receiving, SCI3 performs internal synchronization by sampling the falling edge of the start bit with the basic clock. Receive data is latched internally at the 8th rising edge of the basic clock. This is illustrated in figure 10.16.

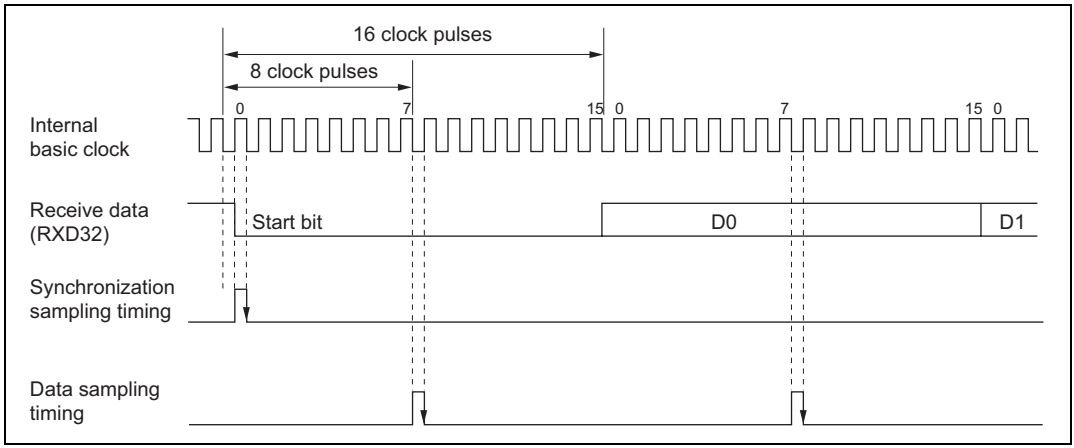

Figure 10.16 Receive Data Sampling Timing in Asynchronous Mode

Consequently, the receive margin in asynchronous mode can be expressed as shown in equation (1).

$$M = \{(0.5 - \frac{1}{2N}) - \frac{D - 0.5}{N} - (L - 0.5)\,F\} \times 100\ [\%] \qquad \text{..... Equation (1)}$$

where M: Receive margin (%)
N: Ratio of bit rate to clock (N = 16)
D: Clock duty (D = 0.5 to 1.0)
L: Frame length (L = 9 to 12)
F: Absolute value of clock frequency deviation

Substituting 0 for F (absolute value of clock frequency deviation) and 0.5 for D (clock duty) in equation (1), a receive margin of 46.875% is given by equation (2).

When D = 0.5 and F = 0,

$$M = \{0.5 - 1/(2 \times 16)\} \times 100\ [\%]$$
$$= 46.875\% \qquad \text{.... Equation (2)}$$

However, this is only a computed value, and a margin of 20% to 30% should be allowed when carrying out system design.

7. Relation between RDR reads and bit RDRF

In a receive operation, SCI3 continually checks the RDRF flag. If bit RDRF is cleared to 0 when reception of one frame ends, normal data reception is completed. If bit RDRF is set to 1, this indicates that an overrun error has occurred.

When the contents of RDR are read, bit RDRF is cleared to 0 automatically. Therefore, if bit RDR is read more than once, the second and subsequent read operations will be performed while bit RDRF is cleared to 0. Note that, when an RDR read is performed while bit RDRF is cleared to 0, if the read operation coincides with completion of reception of a frame, the next frame of data may be read. This is illustrated in figure 10.17.

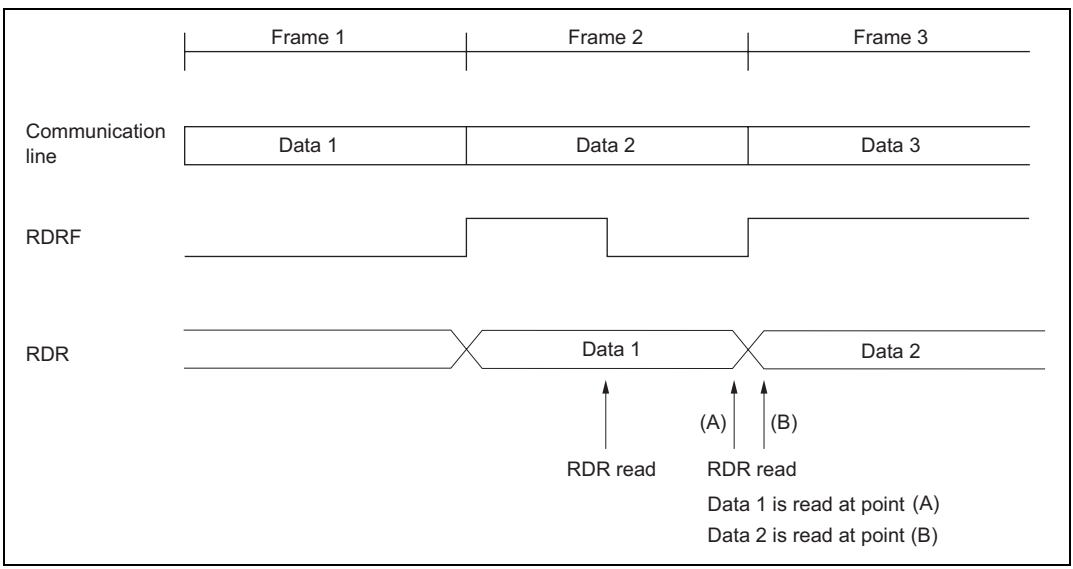

Figure 10.17 Relation between RDR Read Timing and Data

In this case, only a single RDR read operation (not two or more) should be performed after first checking that bit RDRF is set to 1. If two or more reads are performed, the data read the first time should be transferred to RAM, etc., and the RAM contents used. Also, ensure that there is sufficient margin in an RDR read operation before reception of the next frame is completed. To be precise in terms of timing, the RDR read should be completed before bit 7 is transferred in synchronous mode, or before the STOP bit is transferred in asynchronous mode.

8. Transmit and receive operations when making a state transition

Make sure that transmit and receive operations have completely finished before carrying out state transition processing.

9. Switching SCK_{32} function

If pin SCK_{32} is used as a clock output pin by SCI3 in synchronous mode and is then switched to a general input/output pin (a pin with a different function), the pin outputs a low level signal for half a system clock (ϕ) cycle immediately after it is switched.

This can be prevented by either of the following methods according to the situation.

a. When an SCK_{32} function is switched from clock output to non clock-output

   When stopping data transfer, issue one instruction to clear bits TE and RE to 0 and to set bits CKE1 and CKE0 in SCR3 to 1 and 0, respectively. In this case, bit COM in SMR should be left 1. The above prevents SCK_{32} from being used as a general input/output pin. To avoid an intermediate level of voltage from being applied to SCK_{32}, the line connected to SCK_{32} should be pulled up to the V_{CC} level via a resistor, or supplied with output from an external device.

b. When an SCK_{32} function is switched from clock output to general input/output

   When stopping data transfer,

   (i) Issue one instruction to clear bits TE and RE to 0 and to set bits CKE1 and CKE0 in SCR3 to 1 and 0, respectively.

   (ii) Clear bit COM in SMR to 0

   (iii) Clear bits CKE1 and CKE0 in SCR3 to 0

   Note that special care is also needed here to avoid an intermediate level of voltage from being applied to SCK_{32}.

10. Set up at subactive or subsleep mode

At subactive or subsleep mode, SCI3 becomes possible use only at CPU clock is ϕw/2.

11. Oscillator use with serial communications interface (H8/38124 Group only)

When implementing the serial communications interface on the H8/38124 Group, the system clock oscillator must be used. The on-chip oscillator should not be used in this case. See on-chip oscillator selection method in section 4.2, System Clock Generator, for information on switching between the system clock oscillator and the on-chip oscillator.

Section 11 10-Bit PWM

11.1 Overview

The H8/38024 Group is provided with two on-chip 10-bit PWMs (pulse width modulators), designated PWM1 and PWM2, with identical functions. The PWMs can be used as D/A converters by connecting a low-pass filter. In this section the suffix m (m = 1 or 2) is used with register names, etc., as in PWDRLm, which denotes the PWDRL registers for each PWM.

11.1.1 Features

Features of the 10-bit PWMs are as follows.

- Choice of four conversion periods
  Any of the following conversion periods can be chosen:
  4,096/ϕ, with a minimum modulation width of 4/ϕ
  2,048/ϕ, with a minimum modulation width of 2/ϕ
  1,024/ϕ, with a minimum modulation width of 1/ϕ
  512/ϕ, with a minimum modulation width of 1/2 ϕ
- Pulse division method for less ripple
- Use of module standby mode enables this module to be placed in standby mode independently when not used.

On the H8/38124 Group it is possible to select between two types of PWM output: pulse-division PWM and event counter PWM (PWM incorporating AEC). (The H8/38024 Group, H8/38024F-ZTAT Group, and H8/38024S Group can only produce pulse-division PWM output.) Refer to section 9.7, Asynchronous Event Counter, for information on event counter PWM.

11.1.2 Block Diagram

Figure 11.1(1) shows a block diagram of the 10-bit PWM of the H8/38024 Group, H8/38024F-ZTAT Group, and H8/38024S Group. Figure 11.1(2) shows a block diagram of the 10-bit PWM of the H8/38124 Group.

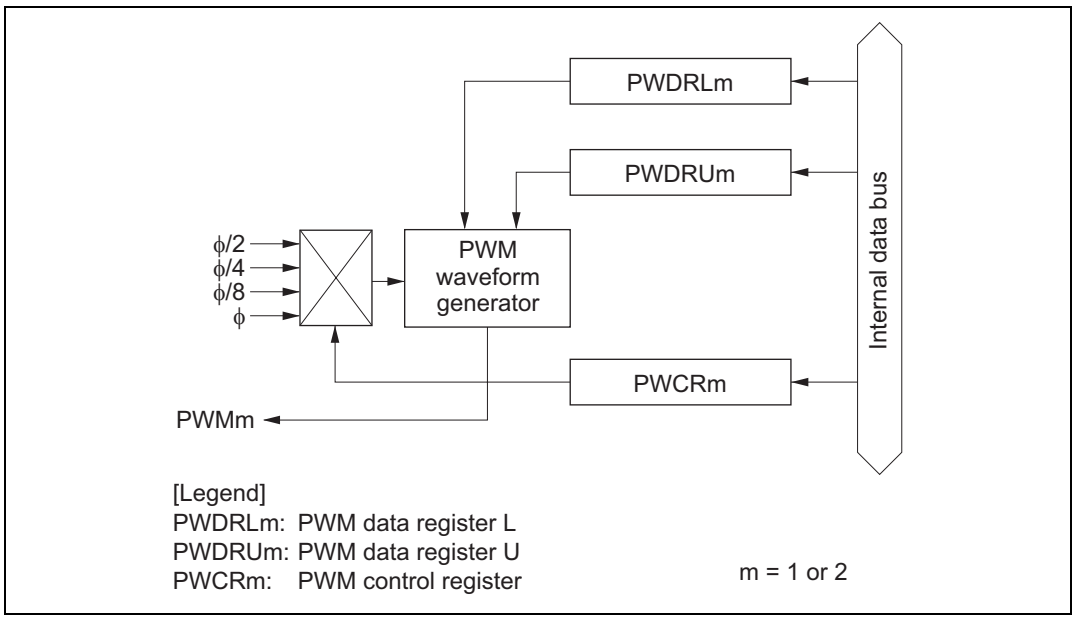

Figure 11.1(1) Block Diagram of the 10-bit PWM (H8/38024 Group, H8/38024F-ZTAT Group, and H8/38024S Group: 1-Channel Configuration)

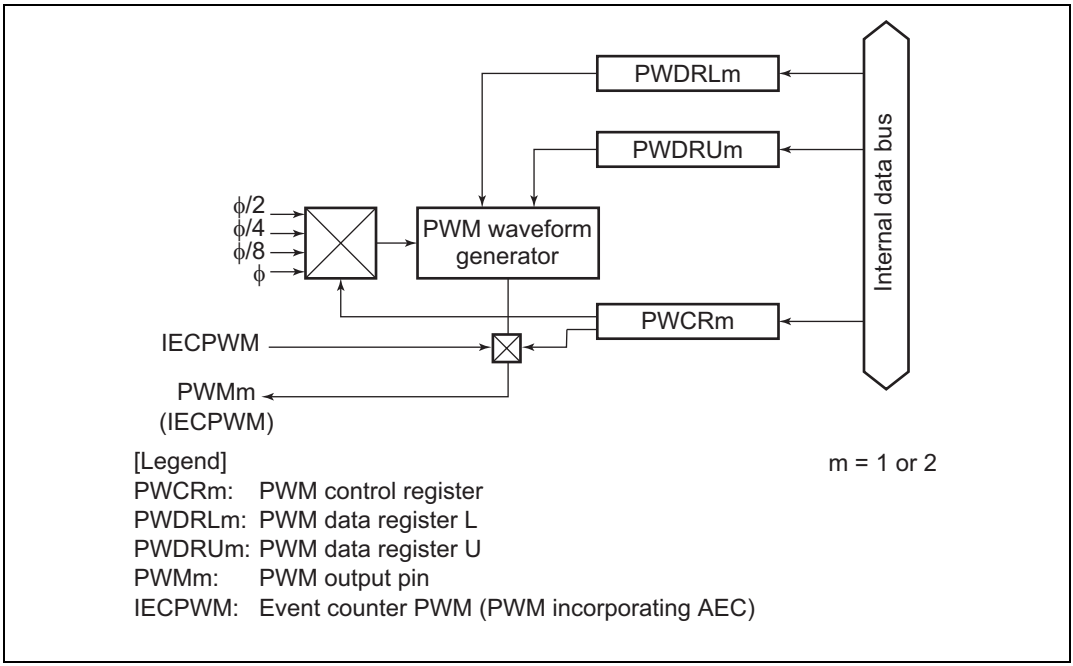

Figure 11.1(2) Figure 11.1(1) Block Diagram of the 10-bit PWM (H8/38124 Group: 1-Channel Configuration)

11.1.3 Pin Configuration

Table 11.1 shows the output pin assigned to the 10-bit PWM.

Table 11.1 Pin Configuration

Name	Abbr.	I/O	Function
PWM1 output pin	PWM1	Output	Pulse-division PWM waveform output (PWM1)/ event counter PWM output (IECPWM)*
PWM2 output pin	PWM2	Output	Pulse-division PWM waveform output (PWM2)/ event counter PWM output (IECPWM)*

Note: * Implemented on H8/38124 Group only.

11.1.4 Register Configuration

Table 11.2 shows the register configuration of the 10-bit PWM.

Table 11.2 Register Configuration

Name	Abbr.	R/W	Initial Value	Address
PWM1 control register	PWCR1	W	H'FC/H'F8*	H'FFD0
PWM1 data register U	PWDRU1	W	H'FC	H'FFD1
PWM1 data register L	PWDRL1	W	H'00	H'FFD2
PWM2 control register	PWCR2	W	H'FC/H'F8*	H'FFCD
PWM2 data register U	PWDRU2	W	H'FC	H'FFCE
PWM2 data register L	PWDRL2	W	H'00	H'FFCF
Clock stop register 2	CKSTPR2	R/W	H'FF	H'FFFB

Note: * Implemented on H8/38124 Group only.

11.2 Register Descriptions

11.2.1 PWM Control Register (PWCRm)

Bit	7	6	5	4	3	2	1	0
	—	—	—	—	—	—/ PWCRm2*	PWCRm1	PWCRm0
Initial value	1	1	1	1	1	1/0*	0	0
Read/Write	—	—	—	—	—	—/W*	W	W

Note: * Implemented on H8/38124 Group only.

On the H8/38024 Group, H8/38024F-ZTAT Group, and H8/38024S Group, PWCRm is an 8-bit write-only register for input clock selection.

Upon reset, PWCRm is initialized to H'FC. On the H8/38124 Group, PWCRm is an 8-bit write-only register used to select the input clock and PWM output type. At reset PWCRm is initialized to H'F8.

Bits 7 to 2—Reserved/Bits 7 to 3—Reserved*

Bits 7 to 2 are reserved; they are always read as 1, and cannot be modified.

Note: * Implemented on H8/38124 Group only.

Bit 2—Output Format Select (PWCRm2)*

This bit selects the format of the output from the PWMm output pin.

This bit is write-only. Reading it always returns 1.

Bit 2 PWCRm2	Description	
0	Pulse-division PWM	(initial value)
1	Event counter PWM	

Note: * Implemented on H8/38124 Group only.

Bits 1 and 0—Clock Select 1 and 0 (PWCRm1, PWCRm0)

Bits 1 and 0 select the clock supplied to the 10-bit PWM. These bits are write-only bits; they are always read as 1.

Bit 1 PWCRm1	Bit 0 PWCRm0	Description	
0	0	The input clock is ϕ ($t\phi^* = 1/\phi$) The conversion period is $512/\phi$, with a minimum modulation width of $1/2\phi$	(initial value)
0	1	The input clock is $\phi/2$ ($t\phi^* = 2/\phi$) The conversion period is $1{,}024/\phi$, with a minimum modulation width of $1/\phi$	
1	0	The input clock is $\phi/4$ ($t\phi^* = 4/\phi$) The conversion period is $2{,}048/\phi$, with a minimum modulation width of $2/\phi$	
1	1	The input clock is $\phi/8$ ($t\phi^* = 8/\phi$) The conversion period is $4{,}096/\phi$, with a minimum modulation width of $4/\phi$	

Note: * Period of PWM input clock.

11.2.2 PWM Data Registers U and L (PWDRUm, PWDRLm)

PWDRUm

Bit	7	6	5	4	3	2	1	0
	—	—	—	—	—	—	PWDRUm1	PWDRUm0
Initial value	1	1	1	1	1	1	0	0
Read/Write	—	—	—	—	—	—	W	W

PWDRLm

Bit	7	6	5	4	3	2	1	0
	PWDRLm7	PWDRLm6	PWDRLm5	PWDRLm4	PWDRLm3	PWDRLm2	PWDRLm1	PWDRLm0
Initial value	0	0	0	0	0	0	0	0
Read/Write	W	W	W	W	W	W	W	W

PWDRUm and PWDRLm form a 10-bit write-only register, with the upper 2 bits assigned to PWDRUm and the lower 8 bits to PWDRLm. The value written to PWDRUm and PWDRLm gives the total high-level width of one PWM waveform cycle.

When 10-bit data is written to PWDRUm and PWDRLm, the register contents are latched in the PWM waveform generator, updating the PWM waveform generation data. The 10-bit data should always be written in the following sequence:

1. Write the lower 8 bits to PWDRLm.
2. Write the upper 2 bits to PWDRUm for the same channel.

PWDRUm and PWDRLm are write-only registers. If they are read, all bits are read as 1.

Upon reset, PWDRUm is initialized to H'FC, and PWDRLm to H'00.

11.2.3 Clock Stop Register 2 (CKSTPR2)

Bit	7	6	5	4	3	2	1	0
	LVDCKSTP*	—	—	PW2CKSTP	AECKSTP	WDCKSTP	PW1CKSTP	LDCKSTP
Initial value	1	1	1	1	1	1	1	1
Read/Write	R/W	—	—	R/W	R/W	R/W	R/W	R/W

Note: * Bits 6 and 5 are also reserved on products other than the H8/38124 Group.

CKSTPR2 is an 8-bit read/write register that performs module standby mode control for peripheral modules. Only the bit relating to the PWM is described here. For details of the other bits, see the sections on the relevant modules.

Bits 4 and 1—PWM Module Standby Mode Control (PWmCKSTP)

Bits 4 and 1 control setting and clearing of module standby mode for the PWMm.

PWmCKSTP	Description	
0	PWMm is set to module standby mode	
1	PWMm module standby mode is cleared	(initial value)

11.3 Operation

11.3.1 Operation

When using the 10-bit PWM, set the registers in the following sequence.

1. Set PWM1 or PWM2 in PMR9 to 1 for the PWM channel to be used, so that pin $P9_0$/PWM1 or $P9_1$/PWM2 is designated as the PWM output pin, or both are designated as PWM output pins.

2. Set bits PWCRm1 and PWCRm0 in the PWM control register (PWCRm) to select a conversion period of 4,096/ϕ (PWCRm1 = 1, PWCRm0 = 1), 2,048/ϕ (PWCRm1 = 1, PWCRm0 = 0), 1,024/ϕ (PWCRm1 = 0, PWCRm0 = 1), or 512/ϕ (PWCRm1 = 0, PWCRm0 = 0). In the case of the H8/38124 Group, select between pulse-division PWM (PWCRm2 = 0) and event counter PWM (PWCRm2 = 1) output. Refer to section 9.7, Asynchronous Event Counter (AEC), for information on the event counter PWM (PWM incorporating AEC) output format.

3. Set the output waveform data in PWDRUm and PWDRLm. Be sure to write in the correct sequence, first PWDRLm then PWDRUm for the same channel. When data is written to PWDRUm, the data will be latched in the PWM waveform generator, updating the PWM waveform generation in synchronization with internal signals.

   One conversion period consists of 4 pulses, as shown in figure 11.2. The total of the high-level pulse widths during this period (T_H) corresponds to the data in PWDRUm and PWDRLm. This relation can be represented as follows.

   $$T_H = (\text{data value in PWDRUm and PWDRLm} + 4) \times t_\phi/2$$

   where tϕ is the PWM input clock period: 1/ϕ (PWCRm = H'0), 2/ϕ (PWCRm = H'1), 4/ϕ (PWCRm = H'2), or 8/ϕ (PWCRm = H'3).

Example: Settings in order to obtain a conversion period of 1,024 µs:
When PWCRm1 = 0 and PWCRm0 = 0, the conversion period is 512/ϕ, so ϕ must be 0.5 MHz. In this case, tfn = 256 µs, with 1/2ϕ (resolution) = 1.0 µs.
When PWCRm1 = 0 and PWCRm0 = 1, the conversion period is 1,024/ϕ, so ϕ must be 1 MHz. In this case, tfn = 256 µs, with 1/ϕ (resolution) = 1.0 µs.
When PWCRm1 = 1 and PWCRm0 = 0, the conversion period is 2,048/ϕ , so ϕ must be 2 MHz. In this case, tfn = 256 µs, with 2/ϕ (resolution) = 1.0 µs.
When PWCRm1 = 1 and PWCRm0 = 1, the conversion period is 4,096/ϕ, so ϕ must be 4 MHz. In this case, t_{fn} = 256 µs, with 4/ϕ (resolution) = 1.0 µs
Accordingly, for a conversion period of 1,024 µs, the system clock frequency (ϕ) must be 0.5 MHz, 1 MHz, 2 MHz, or 4 MHz.

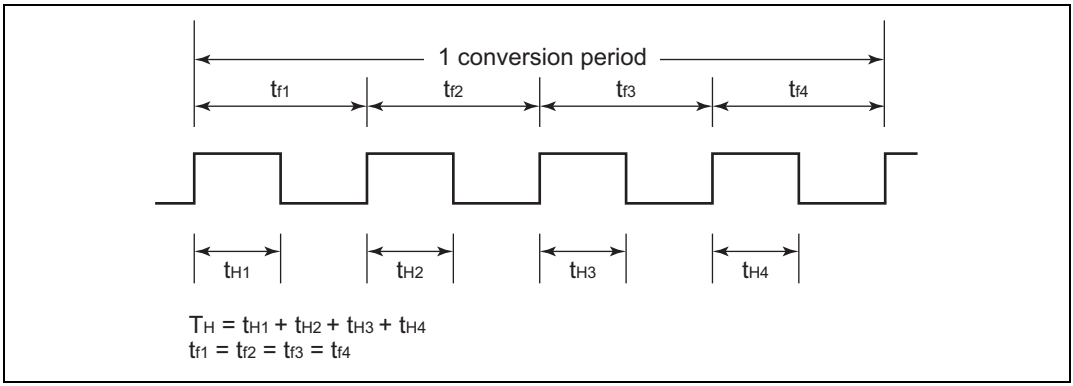

Figure 11.2 PWM Output Waveform

11.3.2 PWM Operation Modes

PWM operation modes are shown in table 11.3.

Table 11.3 PWM Operation Modes

Operation Mode	Reset	Active	Sleep	Watch	Sub-active	Sub-sleep	Standby	Module Standby
PWCRm	Reset	Functions	Functions	Retained	Retained	Retained	Retained	Retained
PWDRUm	Reset	Functions	Functions	Retained	Retained	Retained	Retained	Retained
PWDRLm	Reset	Functions	Functions	Retained	Retained	Retained	Retained	Retained

Section 12 A/D Converter

12.1 Overview

This LSI includes on-chip a resistance-ladder-based successive-approximation analog-to-digital converter, and can convert up to 8 channels of analog input.

12.1.1 Features

The A/D converter has the following features.

- 10-bit resolution
- Eight input channels
- Conversion time: approx. 12.4 µs per channel (at 5-MHz operation)/6.2 µs (at 10-MHz operation)*
- Built-in sample-and-hold function
- Interrupt requested on completion of A/D conversion
- A/D conversion can be started by external trigger input
- Use of module standby mode enables this module to be placed in standby mode independently when not used.

Note: * H8/38124 group only.

12.1.2 Block Diagram

Figure 12.1 shows a block diagram of the A/D converter.

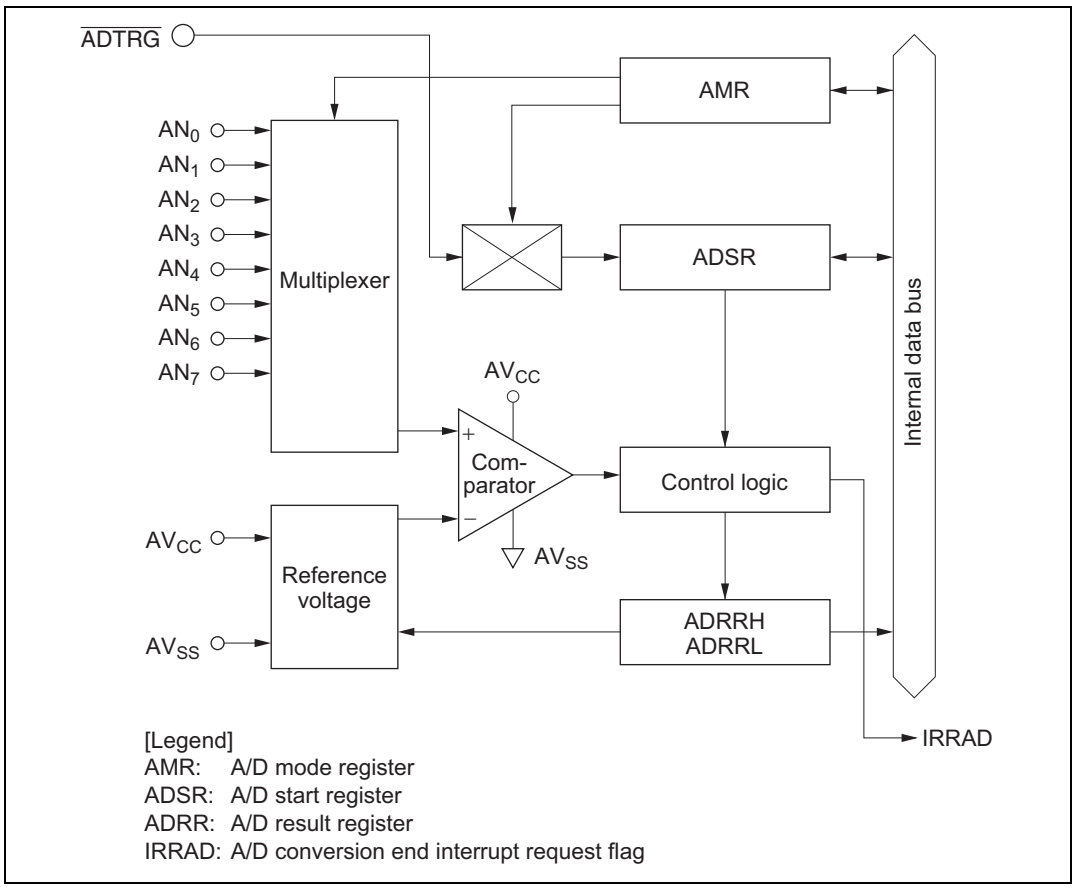

Figure 12.1 Block Diagram of the A/D Converter

12.1.3 Pin Configuration

Table 12.1 shows the A/D converter pin configuration.

Table 12.1 Pin Configuration

Name	Abbr.	I/O	Function
Analog power supply	AV_{CC}	Input	Power supply and reference voltage of analog part
Analog ground	AV_{SS}	Input	Ground and reference voltage of analog part
Analog input 0	AN_0	Input	Analog input channel 0
Analog input 1	AN_1	Input	Analog input channel 1
Analog input 2	AN_2	Input	Analog input channel 2
Analog input 3	AN_3	Input	Analog input channel 3
Analog input 4	AN_4	Input	Analog input channel 4
Analog input 5	AN_5	Input	Analog input channel 5
Analog input 6	AN_6	Input	Analog input channel 6
Analog input 7	AN_7	Input	Analog input channel 7
External trigger input	$\overline{ADTRG}$	Input	External trigger input for starting A/D conversion

12.1.4 Register Configuration

Table 12.2 shows the A/D converter register configuration.

Table 12.2 Register Configuration

Name	Abbr.	R/W	Initial Value	Address
A/D mode register	AMR	R/W	H'30	H'FFC6
A/D start register	ADSR	R/W	H'7F	H'FFC7
A/D result register H	ADRRH	R	Not fixed	H'FFC4
A/D result register L	ADRRL	R	Not fixed	H'FFC5
Clock stop register 1	CKSTPR1	R/W	H'FF	H'FFFA

12.2 Register Descriptions

12.2.1 A/D Result Registers (ADRRH, ADRRL)

Bit	7	6	5	4	3	2	1	0	7	6	5	4	3	2	1	0
	ADR9	ADR8	ADR7	ADR6	ADR5	ADR4	ADR3	ADR2	ADR1	ADR0	—	—	—	—	—	—
Initial value	Undefined	Undefined	Undefined	Undefined	Undefined	Undefined	Undefined	Undefined	Undefined	Undefined	—	—	—	—	—	—
Read/Write	R	R	R	R	R	R	R	R	R	R	—	—	—	—	—	—
	ADRRH								ADRRL							

ADRRH and ADRRL together comprise a 16-bit read-only register for holding the results of analog-to-digital conversion. The upper 8 bits of the data are held in ADRRH, and the lower 2 bits in ADRRL.

ADRRH and ADRRL can be read by the CPU at any time, but the ADRRH and ADRRL values during A/D conversion are not fixed. After A/D conversion is complete, the conversion result is stored as 10-bit data, and this data is held until the next conversion operation starts.

ADRRH and ADRRL are not cleared on reset.

12.2.2 A/D Mode Register (AMR)

Bit	7	6	5	4	3	2	1	0
	CKS	TRGE	—	—	CH3	CH2	CH1	CH0
Initial value	0	0	1	1	0	0	0	0
Read/Write	R/W	R/W	—	—	R/W	R/W	R/W	R/W

AMR is an 8-bit read/write register for specifying the A/D conversion speed, external trigger option, and the analog input pins.

Upon reset, AMR is initialized to H'30.

Bit 7—Clock Select (CKS)

Bit 7 sets the A/D conversion speed.

Bit 7 CKS	Conversion Period	Conversion Time		
		ϕ = 1 MHz	ϕ = 5 MHz	ϕ = 10 MHz*2
0	62/ϕ (initial value)	62 µs	12.4 µs	6.2 µs
1	31/ϕ	31 µs	—*1	—*1

Notes: 1. With the H8/38024, H8/38024S, and H8/38024F-ZTAT operation cannot be guaranteed if the conversion time is less than 12.4 µs. Make sure to select a setting that gives a conversion time of 12.4 µs or more.
With the H8/38124 Group operation cannot be guaranteed if the conversion time is less than 6.2 µs. Make sure to select a setting that gives a conversion time of 6.2 µs or more.
2. H8/38124 Group only.

Bit 6—External Trigger Select (TRGE)

Bit 6 enables or disables the start of A/D conversion by external trigger input.

Bit 6 TRGE	Description
0	Disables start of A/D conversion by external trigger (initial value)
1	Enables start of A/D conversion by rising or falling edge of external trigger at pin $\overline{\text{ADTRG}}$*

Note: * The external trigger ($\overline{\text{ADTRG}}$) edge is selected by bit IEG4 of IEGR. See 1. IRQ edge select register (IEGR) in section 3.3.2, Interrupt Control Registers, for details.

Bits 5 and 4—Reserved

Bits 5 and 4 are reserved; they are always read as 1, and cannot be modified.

Bits 3 to 0—Channel Select (CH3 to CH0)

Bits 3 to 0 select the analog input channel.

The channel selection should be made while bit ADSF is cleared to 0.

Bit 3 CH3	Bit 2 CH2	Bit 1 CH1	Bit 0 CH0	Analog Input Channel	
0	0	*	*	No channel selected	(initial value)
0	1	0	0	AN_0	
0	1	0	1	AN_1	
0	1	1	0	AN_2	
0	1	1	1	AN_3	
1	0	0	0	AN_4	
1	0	0	1	AN_5	
1	0	1	0	AN_6	
1	0	1	1	AN_7	
1	1	*	*	Setting prohibited	

*: Don’t care

12.2.3 A/D Start Register (ADSR)

Bit	7	6	5	4	3	2	1	0
	ADSF	—	—	—	—	—	—	—
Initial value	0	1	1	1	1	1	1	1
Read/Write	R/W	—	—	—	—	—	—	—

The A/D start register (ADSR) is an 8-bit read/write register for starting and stopping A/D conversion.

A/D conversion is started by writing 1 to the A/D start flag (ADSF) or by input of the designated edge of the external trigger signal, which also sets ADSF to 1. When conversion is complete, the converted data is set in ADRRH and ADRRL, and at the same time ADSF is cleared to 0.

Bit 7—A/D Start Flag (ADSF)

Bit 7 controls and indicates the start and end of A/D conversion.

Bit 7 ADSF	Description	
0	Read: Indicates the completion of A/D conversion	(initial value)
	Write: Stops A/D conversion	
1	Read: Indicates A/D conversion in progress	
	Write: Starts A/D conversion	

Bits 6 to 0—Reserved

Bits 6 to 0 are reserved; they are always read as 1, and cannot be modified.

12.2.4 Clock Stop Register 1 (CKSTPR1)

Bit	7	6	5	4	3	2	1	0
	—	—	S32CKSTP	ADCKSTP	TGCKSTP	TFCKSTP	TCCKSTP	TACKSTP
Initial value	1	1	1	1	1	1	1	1
Read/Write	—	—	R/W	R/W	R/W	R/W	R/W	R/W

CKSTPR1 is an 8-bit read/write register that performs module standby mode control for peripheral modules. Only the bit relating to the A/D converter is described here. For details of the other bits, see the sections on the relevant modules.

Bit 4—A/D Converter Module Standby Mode Control (ADCKSTP)

Bit 4 controls setting and clearing of module standby mode for the A/D converter.

ADCKSTP	Description	
0	A/D converter is set to module standby mode	
1	A/D converter module standby mode is cleared	(initial value)

12.3 Operation

12.3.1 A/D Conversion Operation

The A/D converter operates by successive approximations, and yields its conversion result as 10-bit data.

A/D conversion begins when software sets the A/D start flag (bit ADSF) to 1. Bit ADSF keeps a value of 1 during A/D conversion, and is cleared to 0 automatically when conversion is complete.

The completion of conversion also sets bit IRRAD in interrupt request register 2 (IRR2) to 1. An A/D conversion end interrupt is requested if bit IENAD in interrupt enable register 2 (IENR2) is set to 1.

If the conversion time or input channel needs to be changed in the A/D mode register (AMR) during A/D conversion, bit ADSF should first be cleared to 0, stopping the conversion operation, in order to avoid malfunction.

12.3.2 Start of A/D Conversion by External Trigger Input

The A/D converter can be made to start A/D conversion by input of an external trigger signal. External trigger input is enabled at pin $\overline{\text{ADTRG}}$ when bit IRQ4 in PMR1 is set to 1 and bit TRGE in AMR is set to 1. Then when the input signal edge designated in bit IEG4 of interrupt edge select register (IEGR) is detected at pin $\overline{\text{ADTRG}}$, bit ADSF in ADSR will be set to 1, starting A/D conversion.

Figure 12.2 shows the timing.

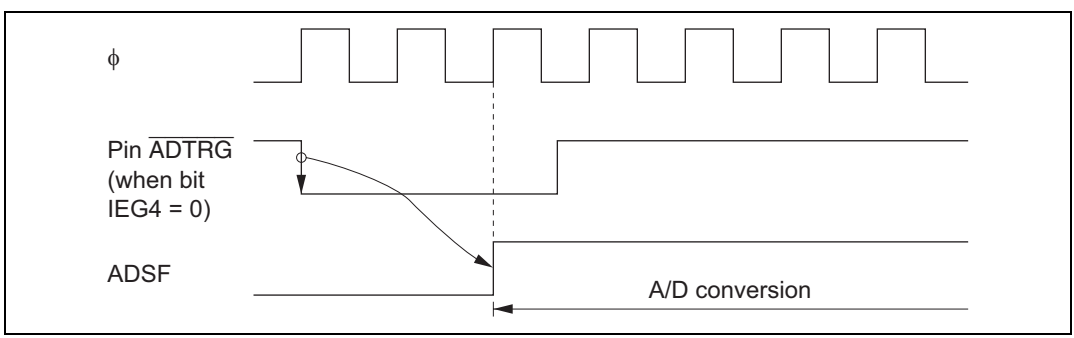

Figure 12.2 External Trigger Input Timing

12.3.3 A/D Converter Operation Modes

A/D converter operation modes are shown in table 12.3.

Table 12.3 A/D Converter Operation Modes

Operation Mode	Reset	Active	Sleep	Watch	Sub-active	Sub-sleep	Standby	Module Standby
AMR	Reset	Functions	Functions	Retained	Retained	Retained	Retained	Retained
ADSR	Reset	Functions	Functions	Retained	Retained	Retained	Retained	Retained
ADRRH	Retained*	Functions	Functions	Retained	Retained	Retained	Retained	Retained
ADRRL	Retained*	Functions	Functions	Retained	Retained	Retained	Retained	Retained

Note: * Undefined in a power-on reset.

12.4 Interrupts

When A/D conversion ends (ADSF changes from 1 to 0), bit IRRAD in interrupt request register 2 (IRR2) is set to 1.

A/D conversion end interrupts can be enabled or disabled by means of bit IENAD in interrupt enable register 2 (IENR2).

For further details see section 3.3, Interrupts.

12.5 Typical Use

An example of how the A/D converter can be used is given below, using channel 1 (pin AN1) as the analog input channel. Figure 12.3 shows the operation timing.

1. Bits CH3 to CH0 of the A/D mode register (AMR) are set to 0101, making pin AN_1 the analog input channel. A/D interrupts are enabled by setting bit IENAD to 1, and A/D conversion is started by setting bit ADSF to 1.
2. When A/D conversion is complete, bit IRRAD is set to 1, and the A/D conversion result is stored in ADRRH and ADRRL. At the same time ADSF is cleared to 0, and the A/D converter goes to the idle state.
3. Bit IENAD = 1, so an A/D conversion end interrupt is requested.
4. The A/D interrupt handling routine starts.
5. The A/D conversion result is read and processed.
6. The A/D interrupt handling routine ends.

If ADSF is set to 1 again afterward, A/D conversion starts and steps 2 through 6 take place.

Figures 12.4 and 12.5 show flow charts of procedures for using the A/D converter.

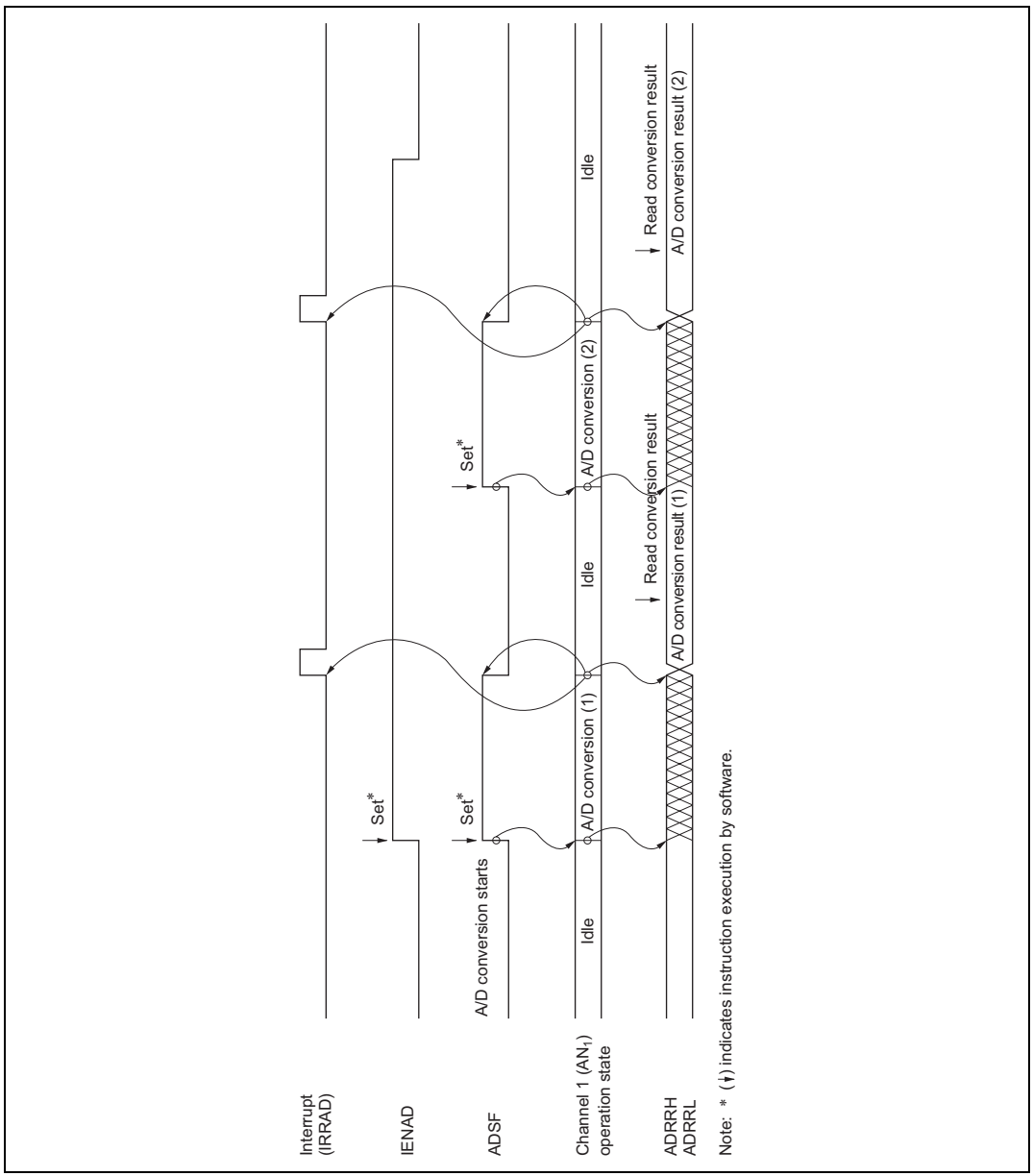

Figure 12.3 Typical A/D Converter Operation Timing

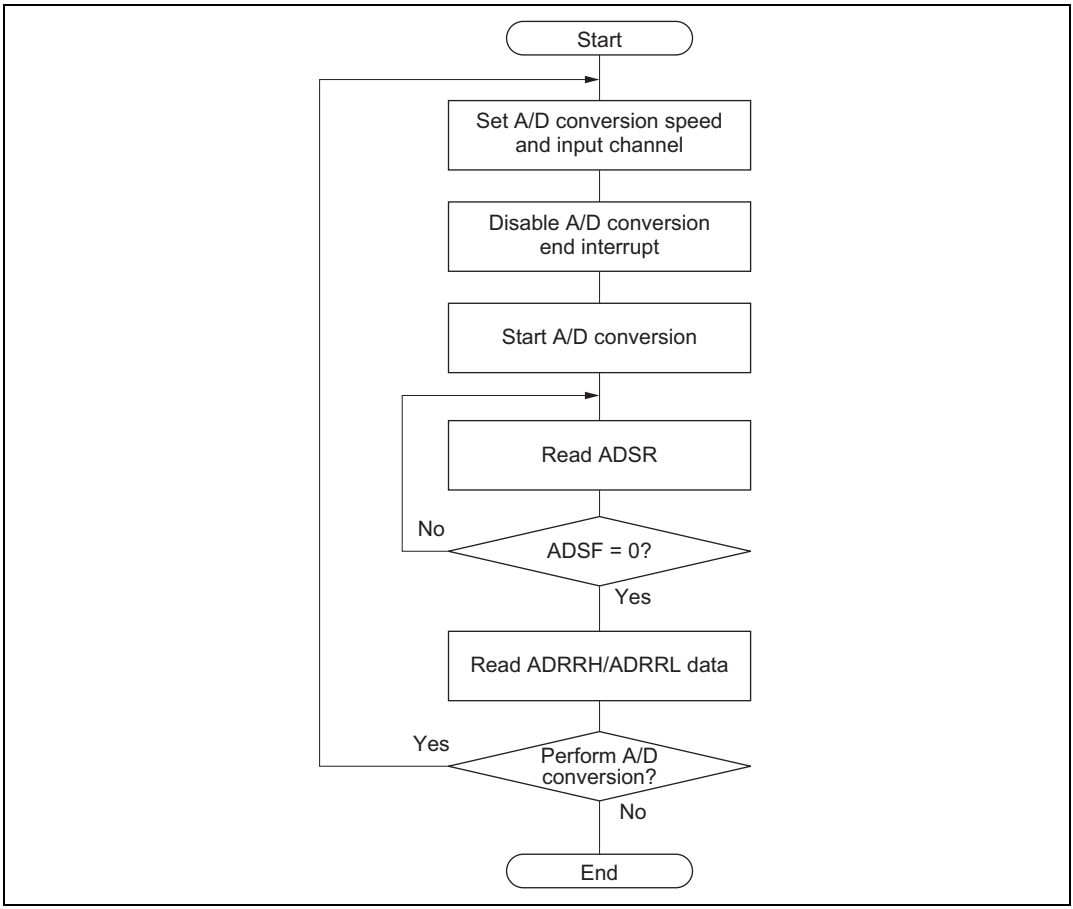

Figure 12.4 Flow Chart of Procedure for Using A/D Converter (Polling by Software)

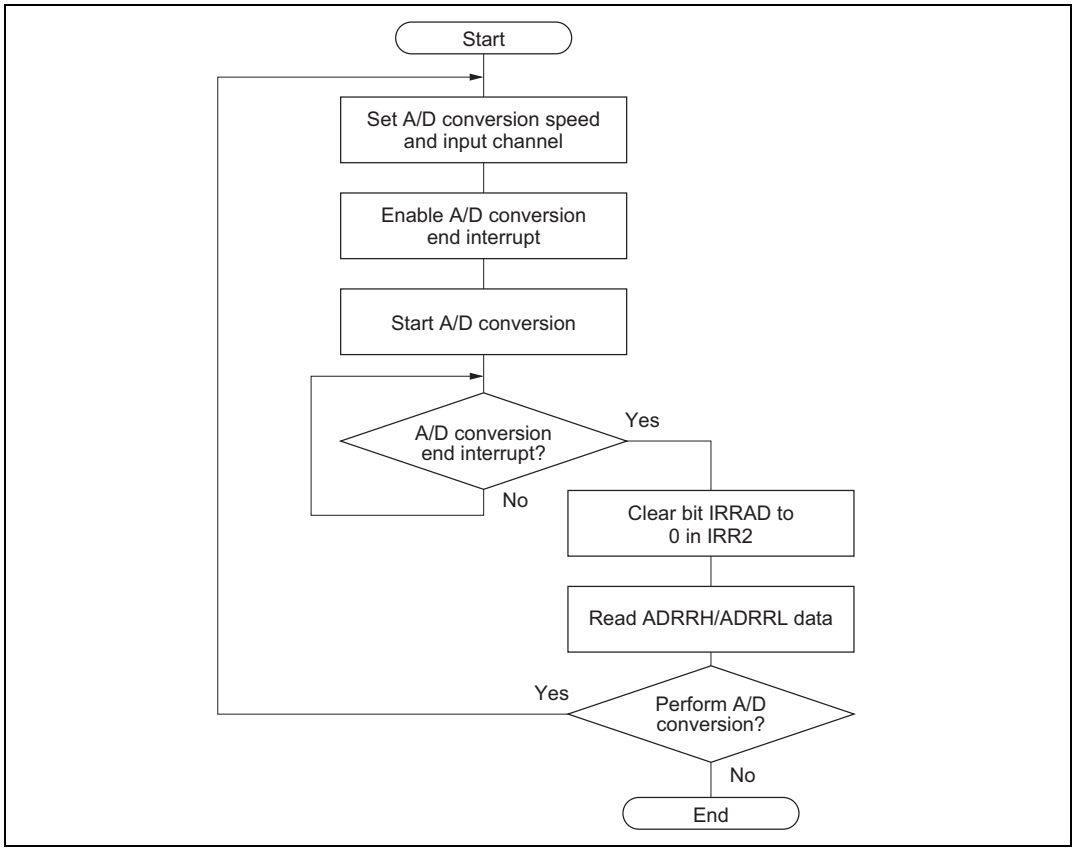

Figure 12.5 Flow Chart of Procedure for Using A/D Converter (Interrupts Used)

12.6 A/D Conversion Accuracy Definitions

This LSI's A/D conversion accuracy definitions are given below.

- Resolution

  The number of A/D converter digital output codes
- Quantization error

  The deviation inherent in the A/D converter, given by 1/2 LSB (see figure 12.6).
- Offset error

  The deviation of the analog input voltage value from the ideal A/D conversion characteristic when the digital output changes from the minimum voltage value 0000000000 to 0000000001 (see figure 12.7).
- Full-scale error

  The deviation of the analog input voltage value from the ideal A/D conversion characteristic when the digital output changes from 1111111110 to 1111111111 (see figure 12.7).
- Nonlinearity error

  The error with respect to the ideal A/D conversion characteristics between zero voltage and full-scale voltage. Does not include offset error, full-scale error, or quantization error.
- Absolute accuracy

  The deviation between the digital value and the analog input value. Includes offset error, full-scale error, quantization error, and nonlinearity error.

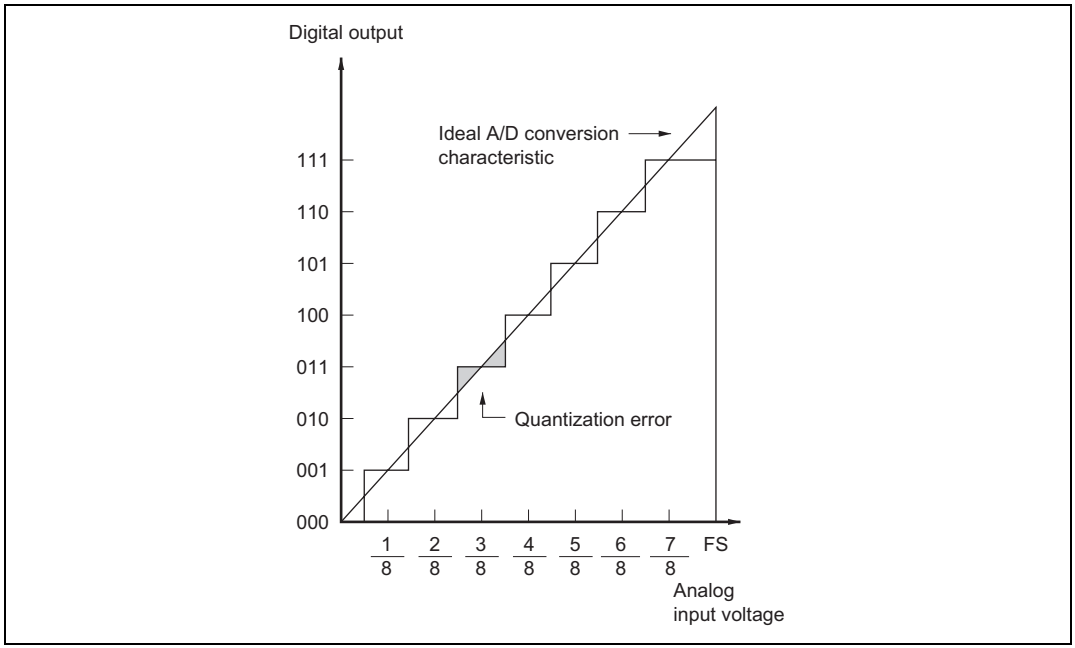

Figure 12.6 A/D Conversion Accuracy Definitions (1)

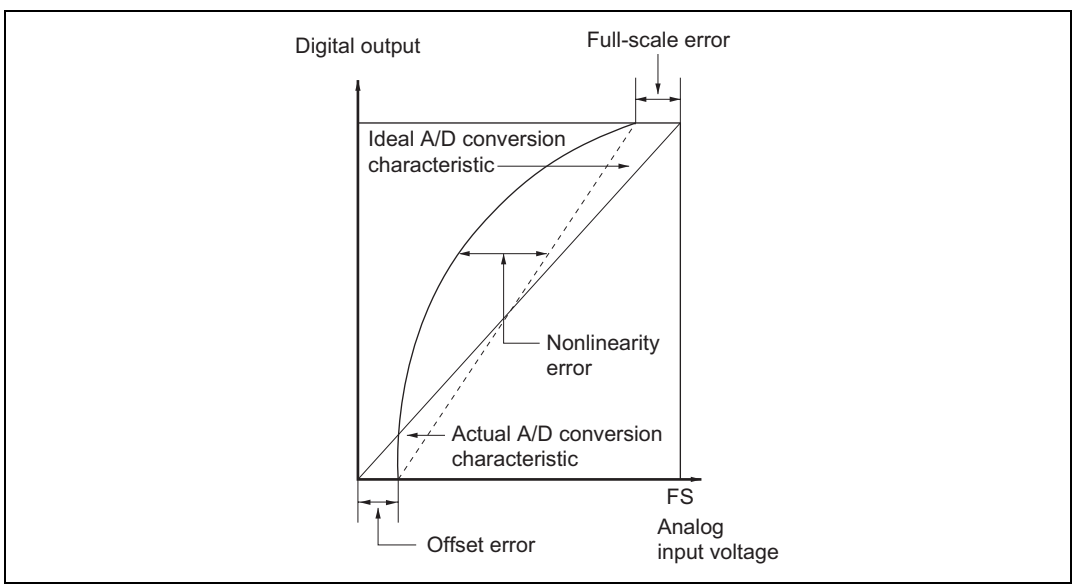

Figure 12.7 A/D Conversion Accuracy Definitions (2)

12.7 Application Notes

12.7.1 Permissible Signal Source Impedance

This LSI's analog input is designed such that conversion precision is guaranteed for an input signal for which the signal source impedance is 10 kΩ or less. This specification is provided to enable the A/D converter's sample-and-hold circuit input capacitance to be charged within the sampling time; if the sensor output impedance exceeds 10 kΩ, charging may be insufficient and it may not be possible to guarantee A/D conversion precision. However, a large capacitance provided externally, the input load will essentially comprise only the internal input resistance of 10 kΩ, and the signal source impedance is ignored. However, as a low-pass filter effect is obtained in this case, it may not be possible to follow an analog signal with a large differential coefficient (e.g., 5 mV/μs or greater) (see figure 12.8). When converting a high-speed analog signal, a low-impedance buffer should be inserted.

12.7.2 Influences on Absolute Precision

Adding capacitance results in coupling with GND, and therefore noise in GND may adversely affect absolute precision. Be sure to make the connection to an electrically stable GND.

Care is also required to ensure that filter circuits do not interfere with digital signals or act as antennas on the mounting board.

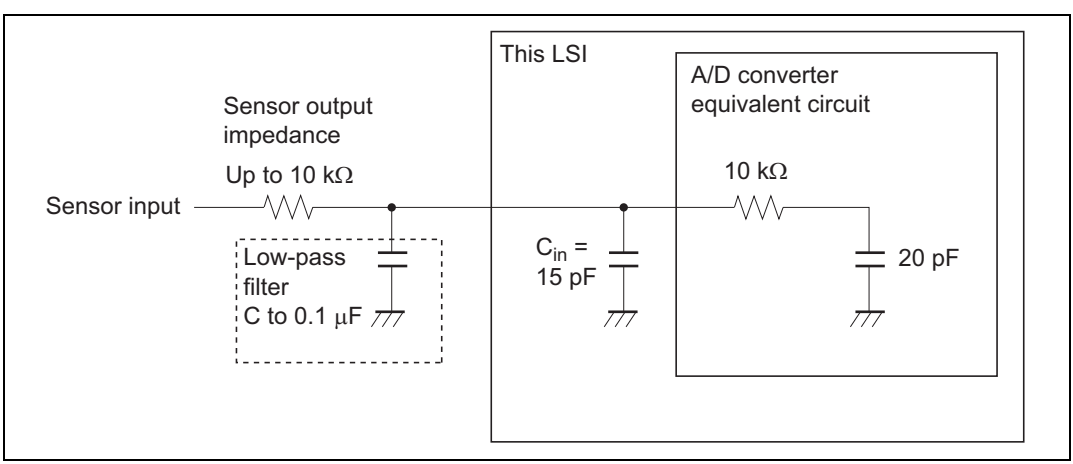

Figure 12.8 Analog Input Circuit Example

12.7.3 Additional Usage Notes

- Data in ADRRH and ADRRL should be read only when the A/D start flag (ADSF) in the A/D start register (ADSR) is cleared to 0.
- Changing the digital input signal at an adjacent pin during A/D conversion may adversely affect conversion accuracy.
- When A/D conversion is started after clearing module standby mode, wait for 10 ϕ clock cycles before starting.
- In active mode or sleep mode, analog power supply current (AI_{STOP1}) flows into the ladder resistance even when the A/D converter is not operating. Therefore, if the A/D converter is not used, it is recommended that AV_{CC} be connected to the system power supply and the ADCKSTP (A/D converter module standby mode control) bit be cleared to 0 in clock stop register 1 (CKSTPR1).

Section 13 LCD Controller/Driver

13.1 Overview

This LSI has an on-chip segment type LCD control circuit, LCD driver, and power supply circuit, enabling it to directly drive an LCD panel.

13.1.1 Features

Features of the LCD controller/driver are given below.

- Display capacity

Duty Cycle	Internal Driver
Static	32 seg
1/2	32 seg
1/3	32 seg
1/4	32 seg

- LCD RAM capacity
  8 bits × 16 bytes (128 bits)
- Word access to LCD RAM
- All four segment output pins can be used individually as port pins.
- Common output pins not used because of the duty cycle can be used for common double-buffering (parallel connection).
- Display possible in operating modes other than standby mode
- Choice of 11 frame frequencies
- Built-in power supply split-resistance, supplying LCD drive power
- Use of module standby mode enables this module to be placed in standby mode independently when not used.
- A or B waveform selectable by software
- Removal of split-resistance can be controlled in software. Note that this capability is implemented in the H8/38124 Group only.

13.1.2 Block Diagram

Figures 13.1(1) and 13.1(2) show a block diagram of the LCD controller/driver.

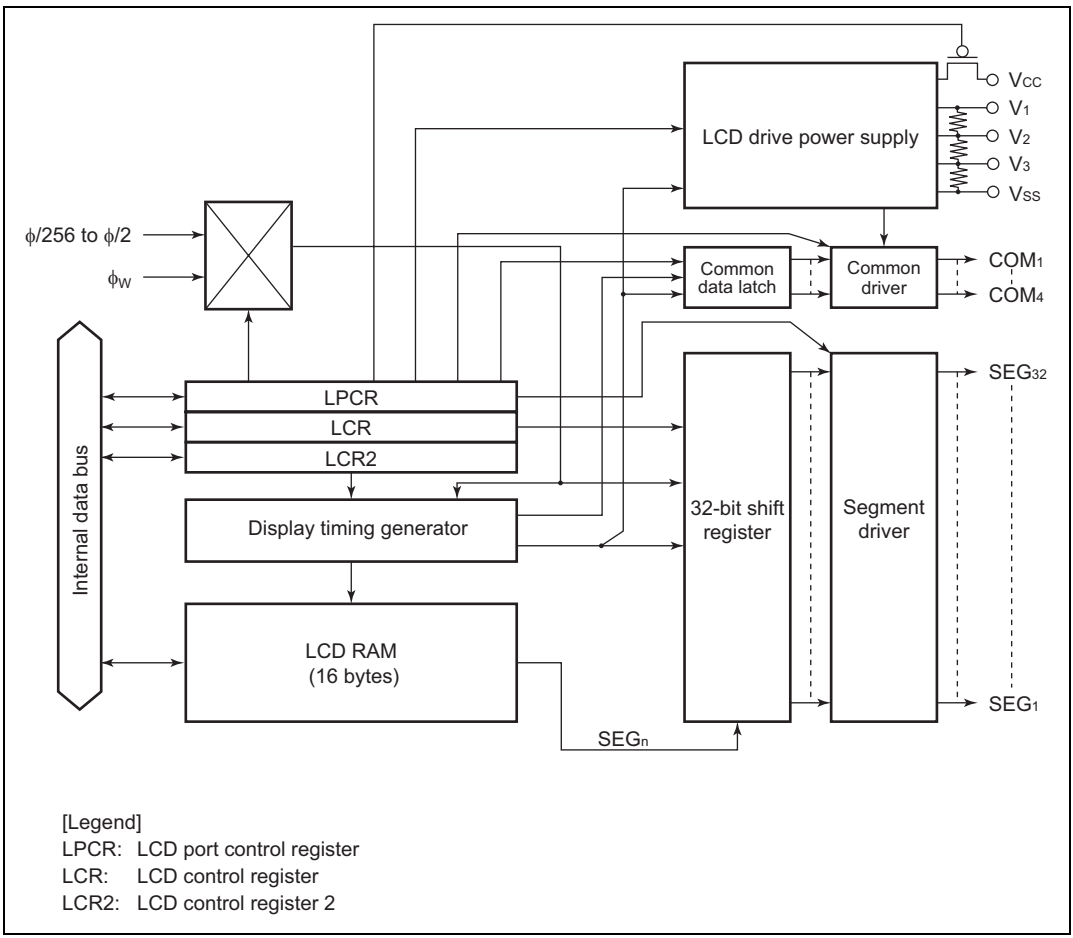

Figure 13.1(1) Block Diagram of H8/38024, H8/38024S, and H8/38024F-ZTAT Group LCD Controller/Driver

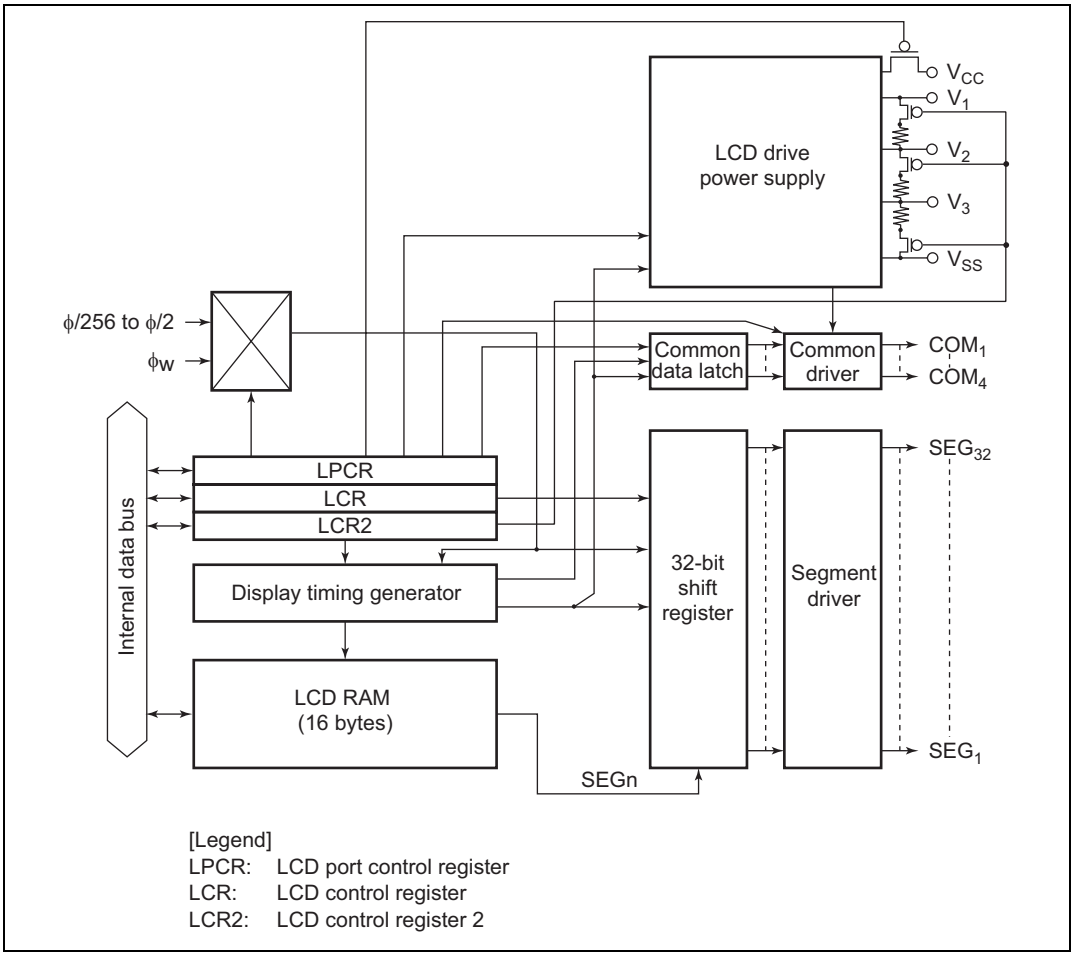

Figure 13.1(2) Block Diagram of H8/38124 Group LCD Controller/Driver

13.1.3 Pin Configuration

Table 13.1 shows the LCD controller/driver pin configuration.

Table 13.1 Pin Configuration

Name	Abbr.	I/O	Function
Segment output pins	SEG_{32} to SEG_1	Output	LCD segment drive pins All pins are multiplexed as port pins (setting programmable)
Common output pins	COM_4 to COM_1	Output	LCD common drive pins Pins can be used in parallel with static or 1/2 duty
LCD power supply pins	V_1, V_2, V_3	—	Used when a bypass capacitor is connected externally, and when an external power supply circuit is used

13.1.4 Register Configuration

Table 13.2 shows the register configuration of the LCD controller/driver.

Table 13.2 LCD Controller/Driver Registers

Name	Abbr.	R/W	Initial Value	Address
LCD port control register	LPCR	R/W	—	H'FFC0
LCD control register	LCR	R/W	H'80	H'FFC1
LCD control register 2	LCR2	R/W	—	H'FFC2
LCD RAM	—	R/W	Undefined	H'F740 to H'F74F
Clock stop register 2	CKSTPR2	R/W	H'FF	H'FFFB

13.2 Register Descriptions

13.2.1 LCD Port Control Register (LPCR)

Bit	7	6	5	4	3	2	1	0
	DTS1	DTS0	CMX	—	SGS3	SGS2	SGS1	SGS0
Initial value	0	0	0	—	0	0	0	0
Read/Write	R/W	R/W	R/W	W	R/W	R/W	R/W	R/W

LPCR is an 8-bit read/write register which selects the duty cycle and LCD driver pin functions.

Bits 7 to 5—Duty Cycle Select 1 and 0 (DTS1, DTS0), Common Function Select (CMX)

The combination of DTS1 and DTS0 selects static, 1/2, 1/3, or 1/4 duty. CMX specifies whether or not the same waveform is to be output from multiple pins to increase the common drive power when not all common pins are used because of the duty setting.

Bit 7 DTS1	Bit 6 DTS0	Bit 5 CMX	Duty Cycle	Common Drivers	Notes
0	0	0	Static	COM_1 (initial value)	Do not use COM_4, COM_3, and COM_2.
		1		COM_4 to COM_1	COM_4, COM_3, and COM_2 output the same waveform as COM_1.
0	1	0	1/2 duty	COM_2 and COM_1	Do not use COM_4 and COM_3.
		1		COM_4 to COM_1	COM_4 outputs the same waveform as COM_3, and COM_2 outputs the same waveform as COM_1.
1	0	0	1/3 duty	COM_3 to COM_1	Do not use COM_4.
		1		COM_4 to COM_1	Do not use COM_4.
1	1	0	1/4 duty	COM_4 to COM_1	—
		1			

Bit 4—Reserved

Bit 4 is reserved. It can only be written with 0.

Bits 3 to 0—Segment Driver Select 3 to 0 (SGS3 to SGS0)

Bits 3 to 0 select the segment drivers to be used.

				Function of Pins SEG_{32} to SEG_1								
Bit 3 SGS3	**Bit 2 SGS2**	**Bit 1 SGS1**	**Bit 0 SGS0**	**SEG_{32} to SEG_{29}**	**SEG_{28} to SEG_{25}**	**SEG_{24} to SEG_{21}**	**SEG_{20} to SEG_{17}**	**SEG_{16} to SEG_{13}**	**SEG_{12} to SEG_9**	**SEG_8 to SEG_5**	**SEG_4 to SEG_1**	**Notes**
0	0	0	0	Port	Port	Port	Port	Port	Port	Port	Port	(Initial value)
			1	Port	Port	Port	Port	Port	Port	Port	SEG	
		1	0	Port	Port	Port	Port	Port	Port	SEG	SEG	
			1	Port	Port	Port	Port	Port	SEG	SEG	SEG	
	1	0	0	Port	Port	Port	Port	SEG	SEG	SEG	SEG	
			1	Port	Port	Port	SEG	SEG	SEG	SEG	SEG	
		1	0	Port	Port	SEG	SEG	SEG	SEG	SEG	SEG	
			1	Port	SEG	SEG	SEG	SEG	SEG	SEG	SEG	
1	0	0	0	SEG	SEG	SEG	SEG	SEG	SEG	SEG	SEG	
			1	SEG	SEG	SEG	SEG	SEG	SEG	SEG	Port	
		1	0	SEG	SEG	SEG	SEG	SEG	SEG	Port	Port	
			1	SEG	SEG	SEG	SEG	SEG	Port	Port	Port	
	1	0	0	SEG	SEG	SEG	SEG	Port	Port	Port	Port	
			1	SEG	SEG	SEG	Port	Port	Port	Port	Port	
		1	0	SEG	SEG	Port	Port	Port	Port	Port	Port	
			1	SEG	Port	Port	Port	Port	Port	Port	Port	

13.2.2 LCD Control Register (LCR)

Bit	7	6	5	4	3	2	1	0
	—	PSW	ACT	DISP	CKS3	CKS2	CKS1	CKS0
Initial value	1	0	0	0	0	0	0	0
Read/Write	—	R/W	R/W	R/W	R/W	R/W	R/W	R/W

LCR is an 8-bit read/write register which performs LCD drive power supply on/off control and display data control, and selects the frame frequency.

LCR is initialized to H'80 upon reset.

Bit 7—Reserved

Bit 7 is reserved; it is always read as 1 and cannot be modified.

Bit 6—LCD Drive Power Supply On/Off Control (PSW)

Bit 6 can be used to turn the LCD drive power supply off when LCD display is not required in a power-down mode, or when an external power supply is used. When the ACT bit is cleared to 0, or in standby mode, the LCD drive power supply is turned off regardless of the setting of this bit.

Bit 6 PSW	Description	
0	LCD drive power supply off	(initial value)
1	LCD drive power supply on	

Bit 5—Display Function Activate (ACT)

Bit 5 specifies whether or not the LCD controller/driver is used. Clearing this bit to 0 halts operation of the LCD controller/driver. The LCD drive power supply is also turned off, regardless of the setting of the PSW bit. However, register contents are retained.

Bit 5 ACT	Description	
0	LCD controller/driver operation halted	(initial value)
1	LCD controller/driver operates	

Bit 4—Display Data Control (DISP)

Bit 4 specifies whether the LCD RAM contents are displayed or blank data is displayed regardless of the LCD RAM contents.

Bit 4 DISP	Description	
0	Blank data is displayed	(initial value)
1	LCD RAM data is display	

Bits 3 to 0—Frame Frequency Select 3 to 0 (CKS3 to CKS0)

Bits 3 to 0 select the operating clock and the frame frequency. In subactive mode, watch mode, and subsleep mode, the system clock (ϕ) is halted, and therefore display operations are not performed if one of the clocks from ϕ/2 to ϕ/256 is selected. If LCD display is required in these modes, ϕw, ϕw/2, or ϕw/4 must be selected as the operating clock.

Bit 3 CKS3	Bit 2 CKS2	Bit 1 CKS1	Bit 0 CKS0	Operating Clock	Frame Frequency*2 ϕ = 2 MHz	 ϕ = 250 kHz*1
0	*	0	0	ϕw	128 Hz*3 (initial value)	
0	*	0	1	ϕw/2	64 Hz*3	
0	*	1	*	ϕw/4	32 Hz*3	
1	0	0	0	ϕ/2	—	244 Hz
1	0	0	1	ϕ/4	977 Hz	122 Hz
1	0	1	0	ϕ/8	488 Hz	61 Hz
1	0	1	1	ϕ/16	244 Hz	30.5 Hz
1	1	0	0	ϕ/32	122 Hz	—
1	1	0	1	ϕ/64	61 Hz	—
1	1	1	0	ϕ/128	30.5 Hz	—
1	1	1	1	ϕ/256	—	—

*: Don't care

Notes: 1. This is the frame frequency in active (medium-speed, ϕosc/16) mode when ϕ = 2 MHz.
2. When 1/3 duty is selected, the frame frequency is 4/3 times the value shown.
3. This is the frame frequency when ϕw = 32.768 kHz.

13.2.3 LCD Control Register 2 (LCR2)

Bit	7	6	5	4	3	2	1	0
	LCDAB	—	—	—	CDS3*	CDS2*	CDS1*	CDS0*
Initial value	0	1	1	—	0	0	0	0
Read/Write	R/W	—	—	R/W	R/W	R/W	R/W	R/W

Note: * Applies to the H8/38124 Group only. On the H8/38024, H8/38024S, and H8/38024F-ZTAT Group, these bits are reserved like bit 4.

LCR2 is an 8-bit read/write register which controls switching between the A waveform and B waveform and removal of split-resistance. Note that removal of split-resistance control is only implemented on the H8/38124 Group.

Bit 7—A Waveform/B Waveform Switching Control (LCDAB)

Bit 7 specifies whether the A waveform or B waveform is used as the LCD drive waveform.

Bit 7 LCDAB	Description	
0	Drive using A waveform	(initial value)
1	Drive using B waveform	

Bits 6 and 5—Reserved

Bits 6 and 5 are reserved; they are always read as 1 and cannot be modified.

Bit 4—Reserved

Bit 4 is reserved; this can only be written with 0.

Bits 3 to 0—Removal of Split-Resistance Control

These bits control whether the split-resistance is removed or connected. Note that on products other than the H8/38124 Group, these bits are reserved like bit 4.

Bit 3 CDS3	Bit 2 CDS2	Bit 1 CDS1	Bit 0 CDS0	Description
0	0	0	0	(initial value)
			1	Split-resistance connected
		1	0	
			1	
	1	0	0	
			1	
		1	0	
			1	Split-resistance removed
1	0	0	0	Split-resistance connected
			1	
		1	0	
			1	
	1	0	0	
			1	
		1	0	
			1	

13.2.4 Clock Stop Register 2 (CKSTPR2)

Bit	7	6	5	4	3	2	1	0
	LVDCKSTP*	—	—	PW2CKSTP	AECKSTP	WDCKSTP	PW1CKSTP	LDCKSTP
Initial value	1	1	1	1	1	1	1	1
Read/Write	R/W	—	—	R/W	R/W	R/W	R/W	R/W

Note: * Bits 6 and 5 are also reserved on products other than the H8/38124 Group.

CKSTPR2 is an 8-bit read/write register that performs module standby mode control for peripheral modules. Only the bit relating to the LCD controller/driver is described here. For details of the other bits, see the sections on the relevant modules.

Bit 0—LCD Controller/Driver Module Standby Mode Control (LDCKSTP)

Bit 0 controls setting and clearing of module standby mode for the LCD controller/driver.

Bit 0 LDCKSTP	Description	
0	LCD controller/driver is set to module standby mode	
1	LCD controller/driver module standby mode is cleared	(initial value)

13.3 Operation

13.3.1 Settings up to LCD Display

To perform LCD display, the hardware and software related items described below must first be determined.

Hardware Settings

a. Using 1/2 duty

When 1/2 duty is used, interconnect pins V_2 and V_3 as shown in figure 13.2.

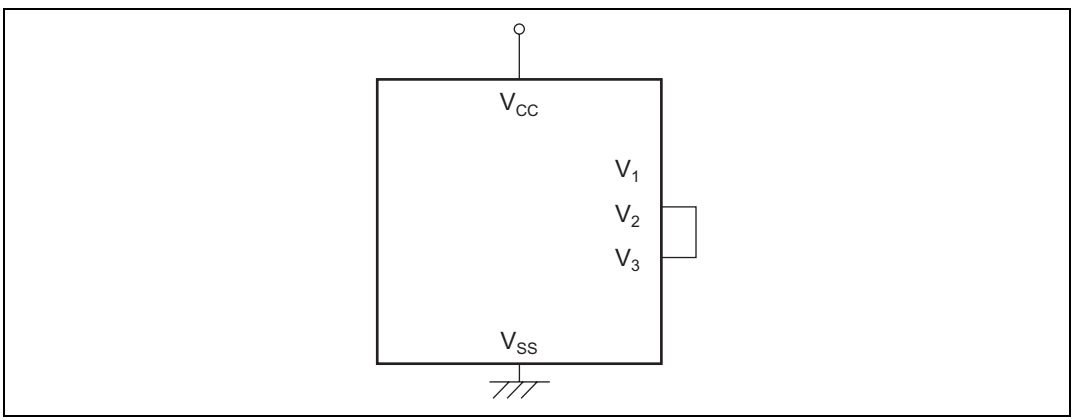

Figure 13.2 Handling of LCD Drive Power Supply when Using 1/2 Duty

b. Large-panel display

As the impedance of the built-in power supply split-resistance is large, it may not be suitable for driving a large panel. If the display lacks sharpness when using a large panel, refer to section 13.3.4, Boosting the LCD Drive Power Supply. When static or 1/2 duty is selected, the common output drive capability can be increased. Set CMX to 1 when selecting the duty cycle. In this mode, with a static duty cycle pins COM_4 to COM_1 output the same waveform, and with 1/2 duty the COM_1 waveform is output from pins COM_2 and COM_1, and the COM_2 waveform is output from pins COM_4 and COM_3.

Software Settings

a. Duty selection

Any of four duty cycles—static, 1/2 duty, 1/3 duty, or 1/4 duty—can be selected with bits DTS1 and DTS0.

b. Segment selection

The segment drivers to be used can be selected with bits SGS_3 to SGS_0.

c. Frame frequency selection

The frame frequency can be selected by setting bits CKS_3 to CKS_0. The frame frequency should be selected in accordance with the LCD panel specification. For the clock selection method in watch mode, subactive mode, and subsleep mode, see section 13.3.3, Operation in Power-Down Modes.

d. A or B waveform selection

Either the A or B waveform can be selected as the LCD waveform to be used by means of LCDAB.

13.3.2 Relationship between LCD RAM and Display

The relationship between the LCD RAM and the display segments differs according to the duty cycle. LCD RAM maps for the different duty cycles are shown in figures 13.3 to 13.6.

After setting the registers required for display, data is written to the part corresponding to the duty using the same kind of instruction as for ordinary RAM, and display is started automatically when turned on. Word- or byte-access instructions can be used for RAM setting.

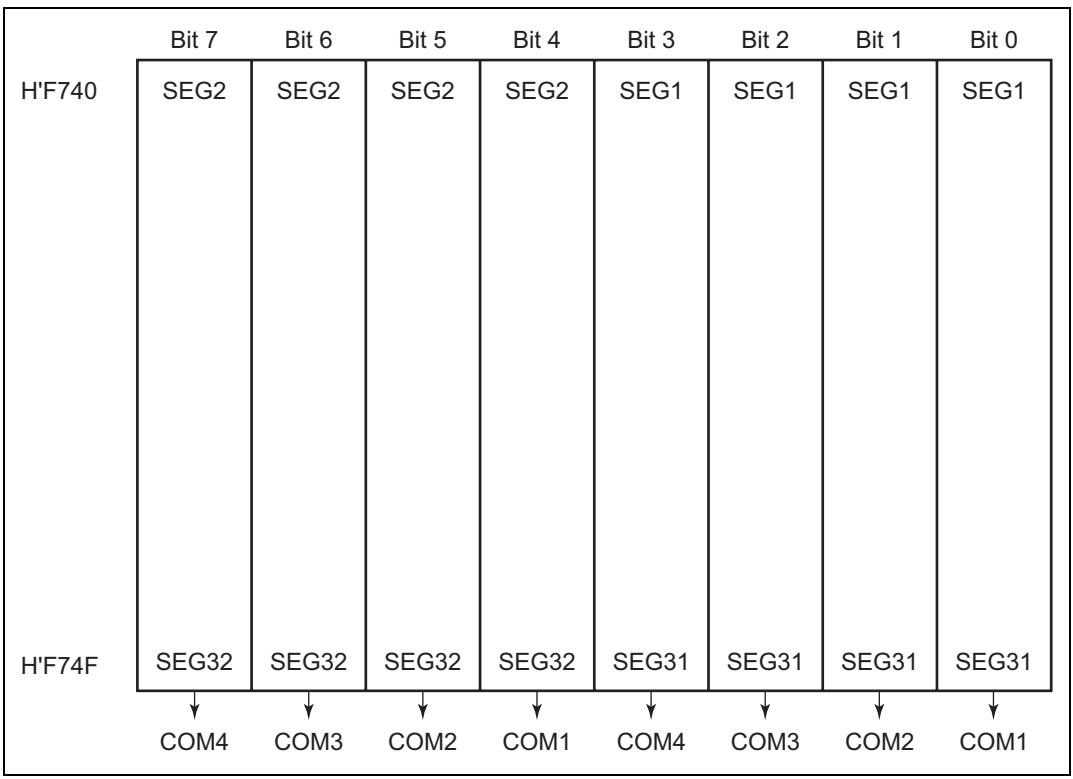

Figure 13.3 LCD RAM Map (1/4 Duty)

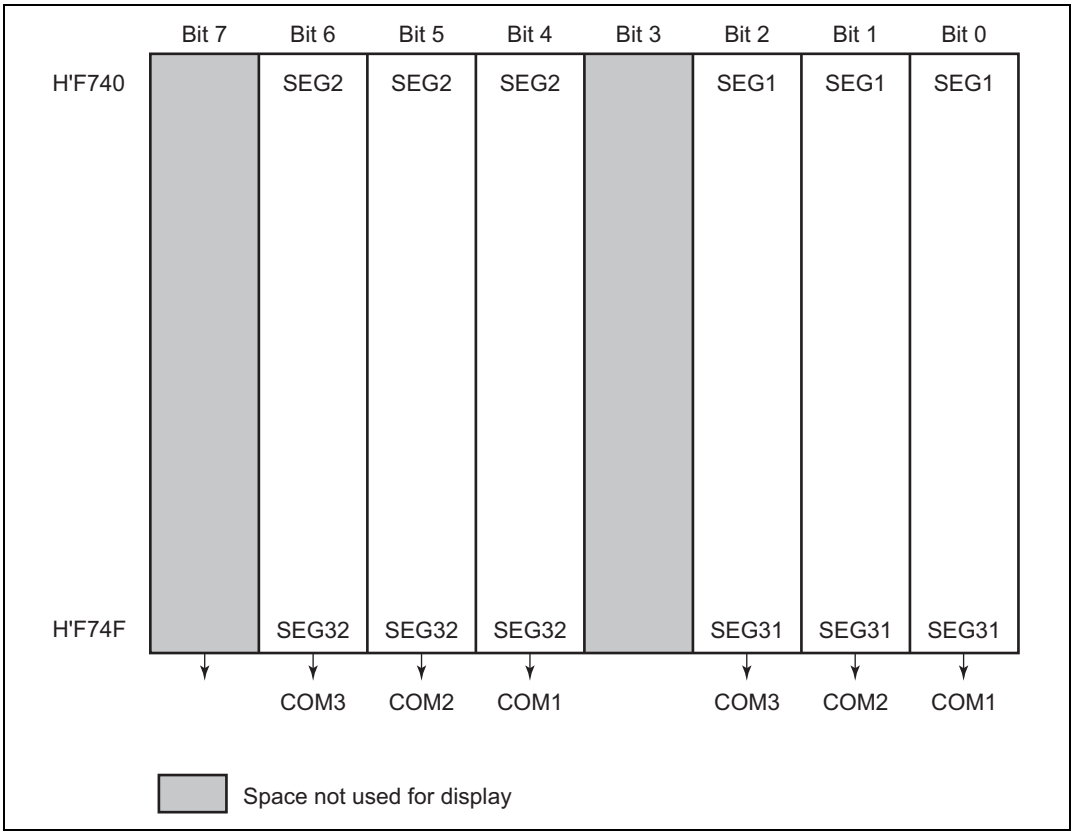

Figure 13.4 LCD RAM Map (1/3 Duty)

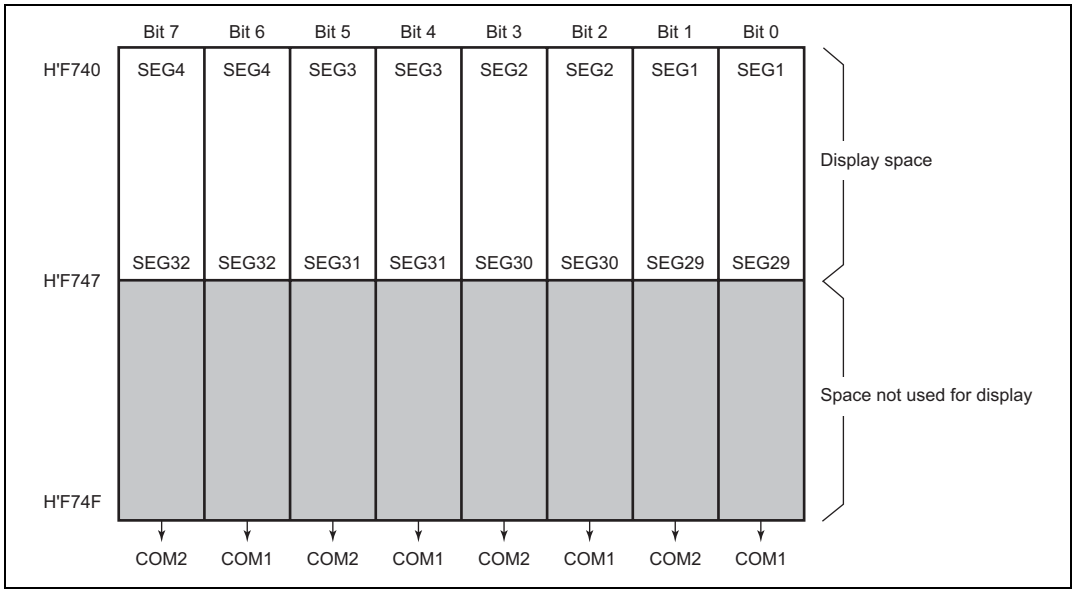

Figure 13.5 LCD RAM Map (1/2 Duty)

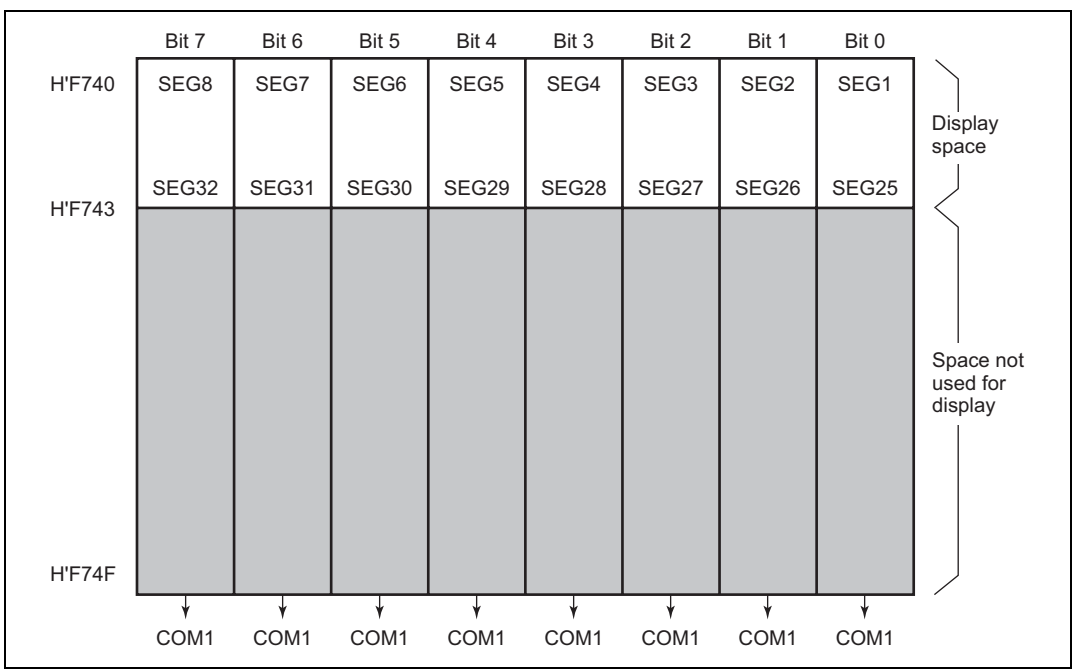

Figure 13.6 LCD RAM Map (Static Mode)

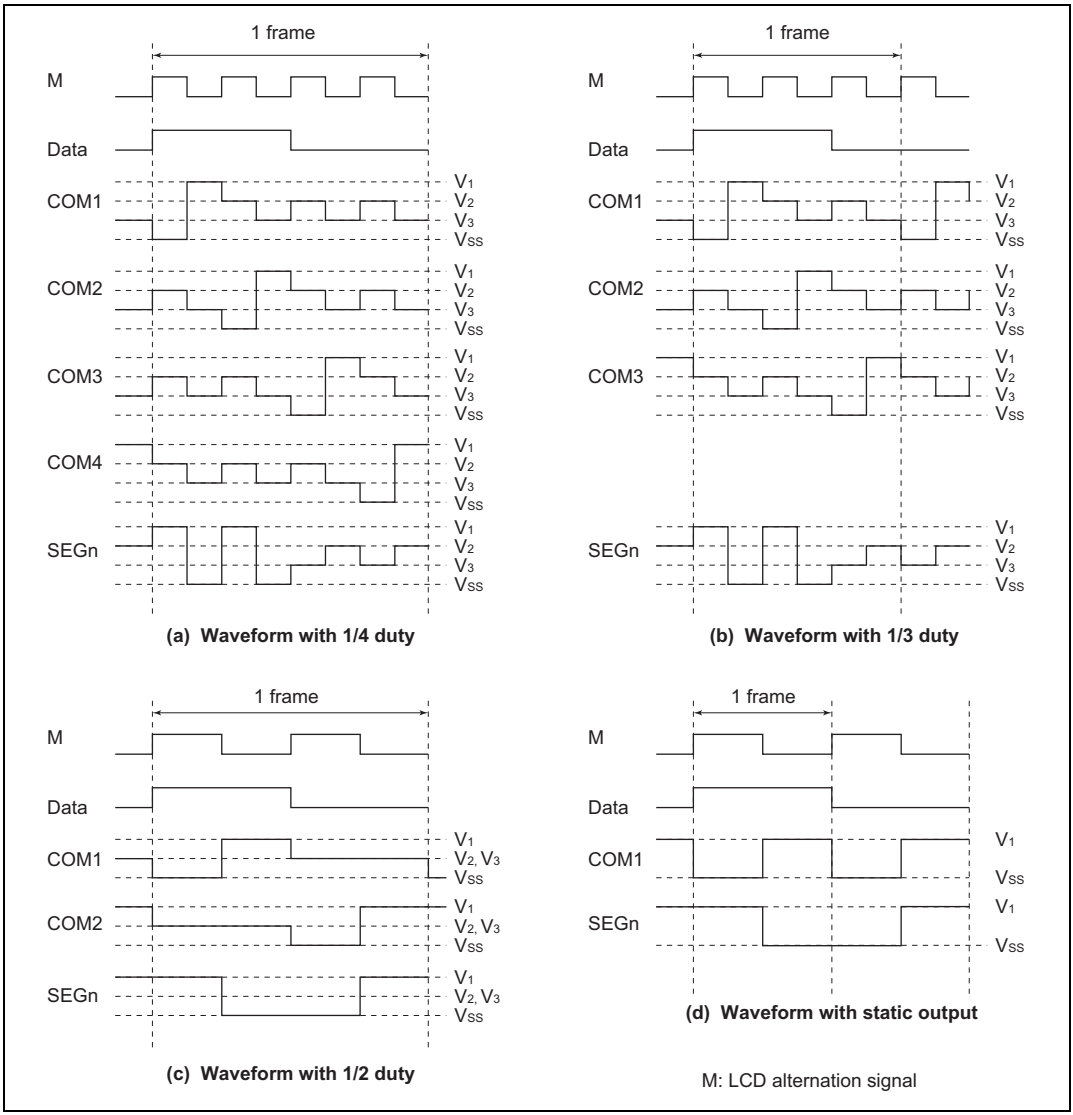

Figure 13.7 Output Waveforms for Each Duty Cycle (A Waveform)

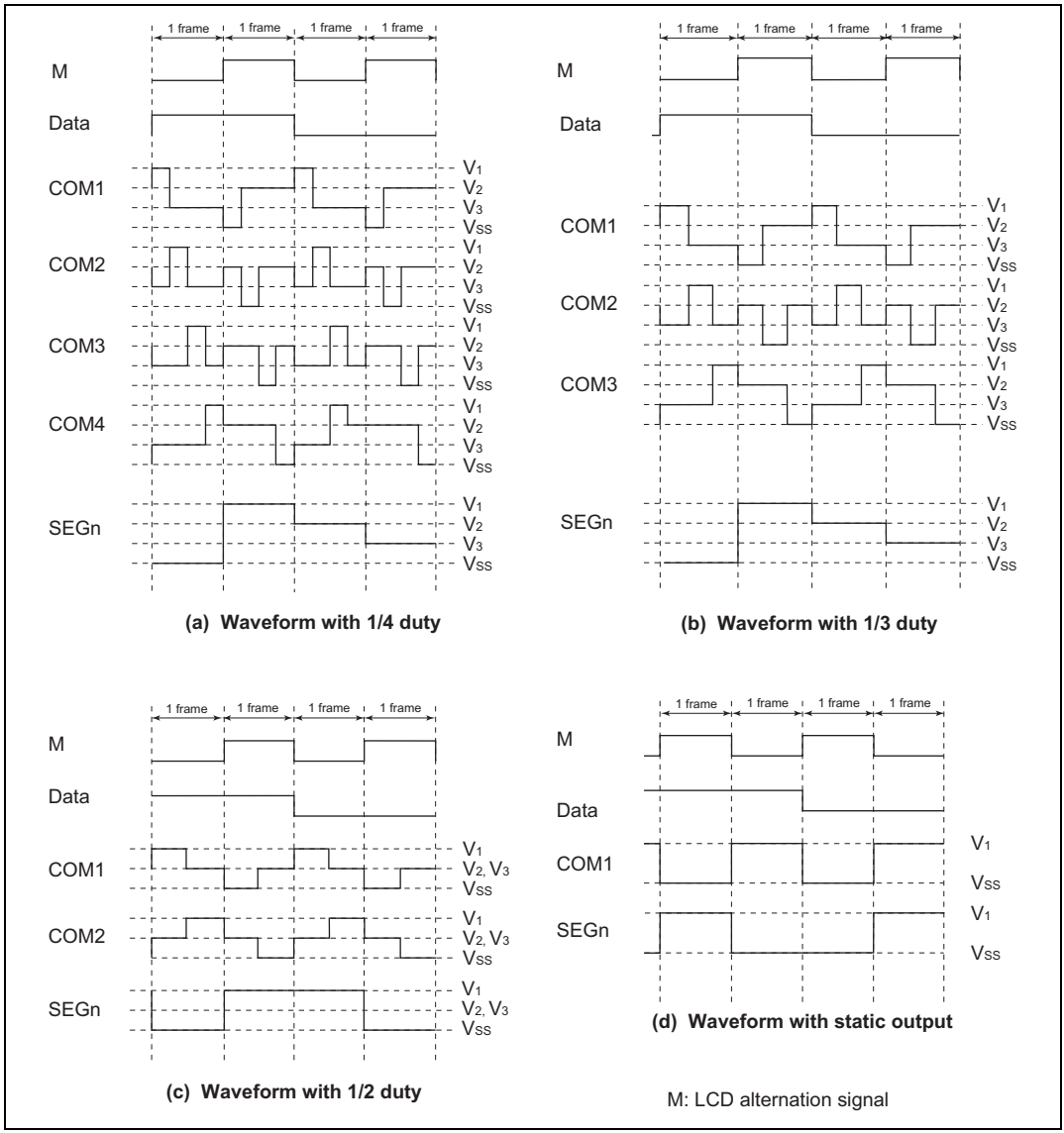

Figure 13.8 Output Waveforms for Each Duty Cycle (B Waveform)

Table 13.3 Output Levels

Data		**0**	**0**	**1**	**1**
M		**0**	**1**	**0**	**1**
Static	Common output	V_1	V_{SS}	V_1	V_{SS}
	Segment output	V_1	V_{SS}	V_{SS}	V_1
1/2 duty	Common output	V_2, V_3	V_2, V_3	V_1	V_{SS}
	Segment output	V_1	V_{SS}	V_{SS}	V_1
1/3 duty	Common output	V_3	V_2	V_1	V_{SS}
	Segment output	V_2	V_3	V_{SS}	V_1
1/4 duty	Common output	V_3	V_2	V_1	V_{SS}
	Segment output	V_2	V_3	V_{SS}	V_1

M: LCD alternation signal

13.3.3 Operation in Power-Down Modes

This LSI the LCD controller/driver can be operated even in the power-down modes. The operating state of the LCD controller/driver in the power-down modes is summarized in table 13.4.

In subactive mode, watch mode, and subsleep mode, the system clock oscillator stops, and therefore, unless ϕw, ϕw/2, or ϕw/4 has been selected by bits CKS3 to CKS0, the clock will not be supplied and display will halt. Since there is a possibility that a direct current will be applied to the LCD panel in this case, it is essential to ensure that ϕw, ϕw/2, or ϕw/4 is selected. In active (medium-speed) mode, the system clock is switched, and therefore CKS3 to CKS0 must be modified to ensure that the frame frequency does not change.

Table 13.4 Power-Down Modes and Display Operation

Mode		Reset	Active	Sleep	Watch	Sub-active	Sub-sleep	Standby	Module Standby
Clock	ϕ	Runs	Runs	Runs	Stops	Stops	Stops	Stops	Stops*4
	ϕw	Runs	Runs	Runs	Runs	Runs	Runs	Stops*1	Stops*4
Display operation	ACT = 0	Stops	Stops	Stops	Stops	Stops	Stops	Stops*2	Stops
	ACT = 1	Stops	Functions	Functions	Functions*3	Functions*3	Functions*3	Stops*2	Stops

Notes: 1. The subclock oscillator does not stop, but clock supply is halted.
2. The LCD drive power supply is turned off regardless of the setting of the PSW bit.
3. Display operation is performed only if ϕw, ϕw/2, or ϕw/4 is selected as the operating clock.
4. The clock supplied to the LCD stops.

13.3.4 Boosting the LCD Drive Power Supply

When a large panel is driven, the on-chip power supply capacity may be insufficient. If the power supply capacity is insufficient when V_{CC} is used as the power supply, the power supply impedance must be reduced. This can be done by connecting bypass capacitors of around 0.1 to 0.3 µF to pins V_1 to V_3, as shown in figure 13.9, or by adding a split-resistance externally.

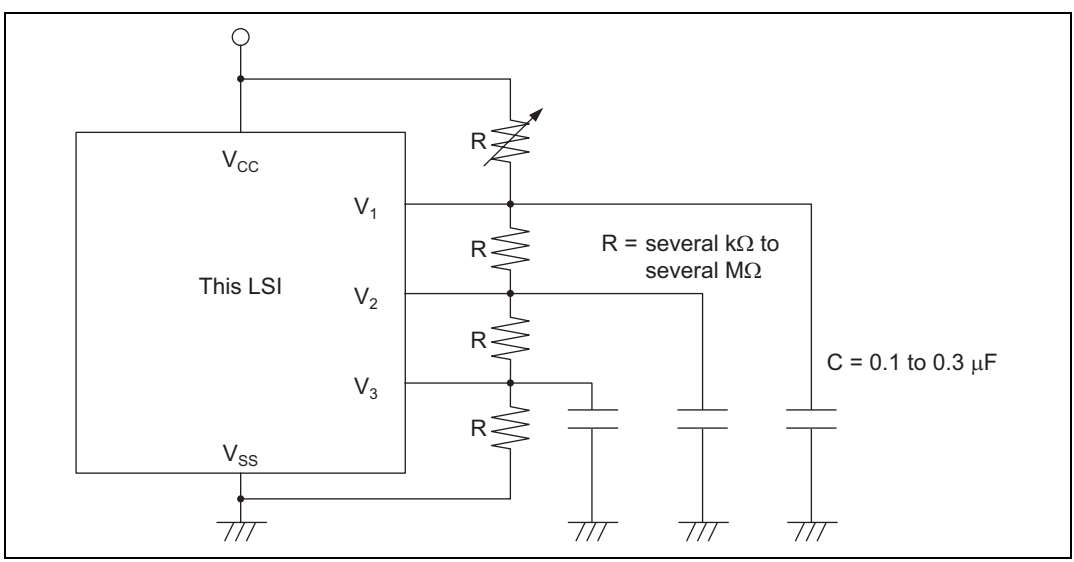

Figure 13.9 Connection of External Split-Resistance

Section 14 Power-On Reset and Low-Voltage Detection Circuits (H8/38124 Group Only)

14.1 Overview

This LSI can include a power-on reset circuit and low-voltage detection circuit.

The low-voltage detection circuit consists of two circuits: LVDI (interrupt by low voltage detect) and LVDR (reset by low voltage detect) circuits.

This circuit is used to prevent abnormal operation (runaway execution) from occurring due to the power supply voltage fall and to recreate the state before the power supply voltage fall when the power supply voltage rises again.

Even if the power supply voltage falls, the unstable state when the power supply voltage falls below the guaranteed operating voltage can be removed by entering standby mode* when exceeding the guaranteed operating voltage and during normal operation. Thus, system stability can be improved. If the power supply voltage falls more, the reset state is automatically entered. If the power supply voltage rises again, the reset state is held for a specified period, then active mode is automatically entered.

Figure 14.1 is a block diagram of the power-on reset circuit and the low-voltage detection circuit.

Note: * The voltage maintained in standby mode is the same as the RAM data retaining voltage (V_{RAM}). See section 16.8.2, DC Characteristics, for information on retaining voltage.

14.1.1 Features

The features of the power-on reset circuit and low-voltage detection circuit are described below.

- Power-on reset circuit

  Uses an external capacitor to generate an internal reset signal when power is first supplied.
- Low-voltage detection circuit

  LVDR: Monitors the power-supply voltage, and generates an internal reset signal when the voltage falls below a specified value.

  LVDI: Monitors the power-supply voltage, and generates an interrupt when the voltage falls below or rises above respective specified values.

Two pairs of detection levels for reset generation voltage are available: when only the LVDR circuit is used, or when the LVDI and LVDR circuits are both used. In addition, power supply rise/drop detection voltages and a detection voltage reference voltage may be input from an external source, allowing the detection level to be set freely by the user.

14.1.2 Block Diagram

A block diagram of the power-on reset circuit and low-voltage detection circuit are shown in figure 14.1.

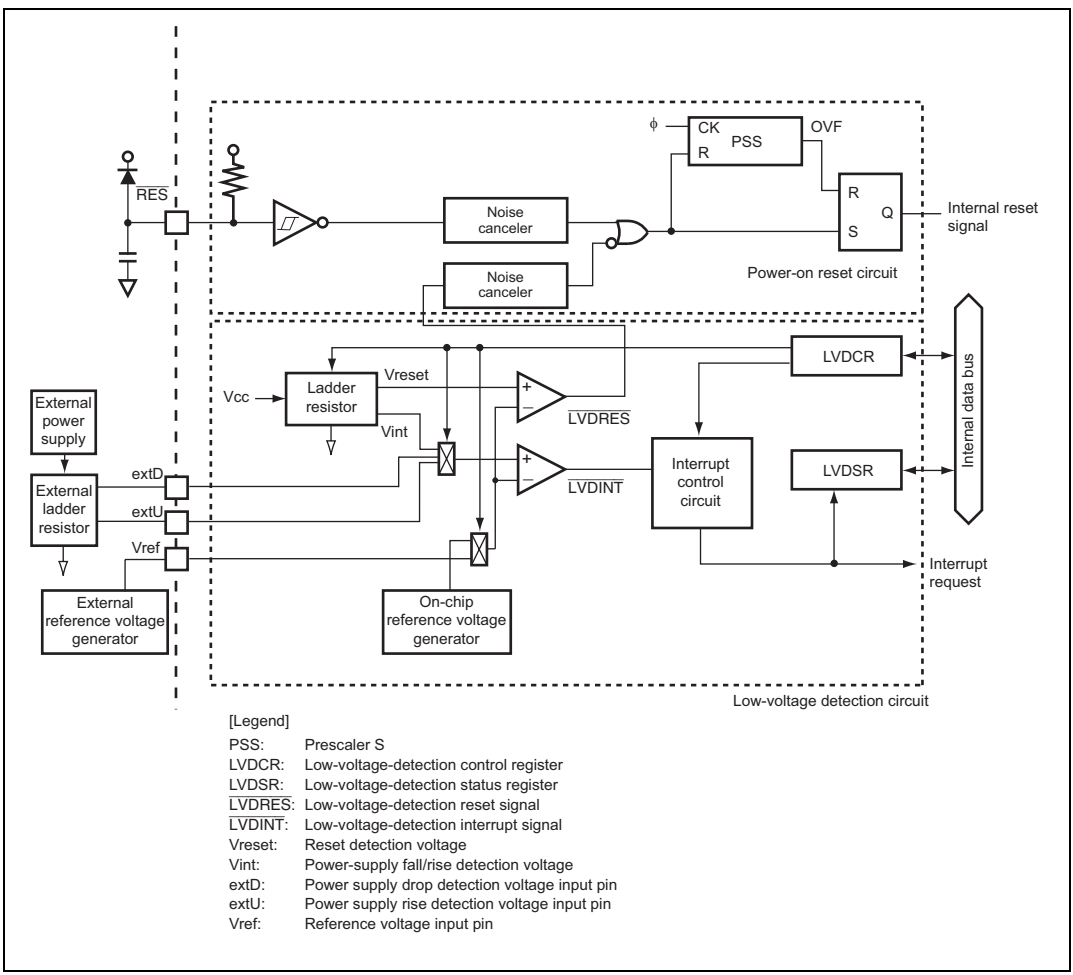

Figure 14.1 Diagram of Power-On Reset Circuit and Low-Voltage Detection Circuit

14.1.3 Pin Description

The pins of the power-on reset circuit and low-voltage detection circuit are listed in table 14.1.

Table 14.1 Pin Description

Pin	Symbol	I/O	Function
Low-voltage detection circuit reference voltage input pin	Vref	Input	Reference voltage input for low-voltage detection circuit
Low-voltage detection circuit power supply drop detection voltage input pin	extD	Input	Power supply drop detection voltage input pin for low-voltage detection circuit
Low-voltage detection circuit power supply rise detection voltage input pin	extU	Input	Power supply rise detection voltage input pin for low-voltage detection circuit

14.1.4 Register Descriptions

The registers of the power-on reset circuit and low-voltage detection circuit are listed in table 14.2.

Table 14.2 Register Descriptions

Name	Symbol	R/W	Initial Value	Address
Low-voltage detection control register	LVDCR	R/W	H'00	H'FF86
Low-voltage detection status register	LVDSR	R/W	H'00	H'FF87
Low-voltage detection counter	LVDCNT	R	H'00	H'FFC3

14.2 Individual Register Descriptions

14.2.1 Low-Voltage Detection Control Register (LVDCR)

Bit	7	6	5	4	3	2	1	0
	LVDE	—	VINTDSEL	VINTUSEL	LVDSEL	LVDRE	LVDDE	LVDUE
Initial value	0*	0	0	0	0*	0*	0	0
Read/Write	R/W	R/W	R/W	R/W	R/W	R/W	R/W	R/W

Note: * These bits are not initialized by resets trigged by LVDR. They are initialized by power-on resets and watchdog timer resets.

LVDCR is an 8-bit read/write register. It is used to control whether or not the low-voltage detection circuit is used, settings for external input of power supply rise and drop detection voltages, the LVDR detection level setting, enabling or disabling of resets triggered by the low-voltage detection reset circuit (LVDR), and enabling or disabling of interrupts triggered by power supply voltage drops or rises.

Bit 7—LVD Enable (LVDE)

This bit is used to control whether or not the low-voltage detection circuit is used.

Bit 7 LVDE	Description	
0	Low-voltage detection circuit not used (standby status)	(initial value)
1	Low-voltage detection circuit used	

Bit 6—Reserved

This bit is a read/write enabled reserved bit.

Bit 5—Power Supply Drop (LVDD) Detection Level External Input Select (VINTDSEL)

This bit is used to select the power supply drop detection level.

Bit 5 VINTDSEL	Description	
0	LVDD detection level generated by on-chip ladder resistor	(initial value)
1	LVDD detection level input to extD pin	

Bit 4—Power Supply Rise (LVDU) Detection Level External Input Select (VINTUSEL)

This bit is used to select the power supply rise detection level.

Bit 4 VINTUSEL	Description	
0	LVDU detection level generated by on-chip ladder resistor	(initial value)
1	LVDU detection level input to extU pin	

Bit 3—LVDR Detection Level Select (LVDSEL)

This bit is used to select the LVDR detection level. Select 2.3 V (typical) reset if voltage rise and drop detection interrupts are to be used. For reset detection only, Select 3.3 V (typical) reset.

Bit 3 LVDSEL	Description	
0	Reset detection voltage 2.3 V (typ.)	(initial value)
1	Reset detection voltage 3.3 V (typ.)	

Bit 2—LVDR Enable (LVDRE)

This bit is used to control whether resets triggered by LVDR are enabled or disabled.

Bit 2 LVDRE	Description	
0	LVDR resets disabled	(initial value)
1	LVDR resets enabled	

Bit 1—Voltage Drop Interrupt Enable (LVDDE)

This bit is used to control whether voltage drop interrupt requests are enabled or disabled.

Bit 1 LVDDE	Description	
0	Voltage drop interrupt requests disabled	(initial value)
1	Voltage drop interrupt requests enabled	

Bit 0—Voltage Rise Interrupt Enable (LVDUE)

This bit is used to control whether voltage rise interrupt requests are enabled or disabled.

Bit 0 LVDUE	Description	
0	Voltage rise interrupt requests disabled	(initial value)
1	Voltage rise interrupt requests enabled	

Table 14.3 shows the relationship between LVDCR settings and function selections. Refer to table 14.3 when making settings to LVDCR.

Table 14.3 LVDCR Settings and Function Selections

LVDCR Setting Value					Power-on Reset	Low-Voltage Detection Reset	Low-Voltage Detection Voltage Drop Interrupt	Low-Voltage Detection Voltage Rise Interrupt
LVDE	LVDSEL	LVDRE	LVDDE	LVDUE				
0	*	*	*	*	○	—	—	—
1	1	1	0	0	○	○	—	—
1	0	0	1	0	○	—	○	—
1	0	0	1	1	○	—	○	○
1	0	1	1	1	○	○	○	○

Note: Setting values marked with an asterisk (*) are invalid.

14.2.2 Low-Voltage Detection Status Register (LVDSR)

Bit	7	6	5	4	3	2	1	0
	OVF	—	—	—	VREFSEL	—	LVDDF	LVDUF
Initial value	0*	0	0	0	0	0	0*	0*
Read/Write	R/W	R/W	R/W	R/W	R/W	R/W	R/W	R/W

Note: * These bits initialized by resets trigged by LVDR.

LVDSR is an 8-bit read/write register. It is used to control external input selection, indicates when the reference voltage is stable, and indicates if the power supply voltage goes below or above a specified range.

Bit 7—LVD Reference Voltage Stabilized Flag (OVF)

This bit indicates when the low-voltage detection counter (LVDCNT) overflows.

Bit 7 OVF	Description	
0	[Clearing condition] When 0 is written after reading 1	(initial value)
1	[Setting condition] When the low-voltage detection counter (LVDCNT) overflows	

Bits 6 to 4—Reserved

These bits are read/write enabled reserved bits.

Bit 3—Reference Voltage External Input Select (VREFSEL)

This bit is used to select the reference voltage.

Bit 3 VREFSEL	Description	
0	The on-chip circuit is used to generate the reference voltage	(initial value)
1	The reference voltage is input to the Vref pin from an external source	

Bit 2—Reserved

This bit is reserved. It is always read as 0 and cannot be written to.

Bit 1—LVD Power Supply Voltage Drop Flag (LVDDF)

This bit indicates when a power supply voltage drop has been detected.

Bit 1 LVDDF	Description	
0	[Clearing condition] When 0 is written after reading 1	(initial value)
1	[Setting condition] When the power supply voltage drops below Vint(D)	

Bit 0—LVD Power Supply Voltage Rise Flag (LVDUF)

This bit indicates when a power supply voltage rise has been detected.

Bit 0 LVDUF	Description	
0	[Clearing condition] When 0 is written after reading 1	(initial value)
1	[Setting condition] When the power supply voltage drops below Vint(D) while the LVDUE bit in LVDCR is set to 1, and it rises above Vint(U) before dropping below Vreset1	

14.2.3 Low-Voltage Detection Counter (LVDCNT)

Bit	7	6	5	4	3	2	1	0
	CNT7	CNT6	CNT5	CNT4	CNT3	CNT2	CNT1	CNT0
Initial value	0	0	0	0	0	0	0	0
Read/Write	R	R	R	R	R	R	R	R

LVDCNT is a read-only 8-bit up-counter. Counting begins when 1 is written to LVDE. The counter increments using ϕ/4 as the clock source until it overflows by switching from H'FF to H'00, at which time the OVF bit in the LVDSR register is set to 1, indicating that the on-chip reference voltage generator has stabilized. If the LVD function is used, it is necessary to stand by until the counter has overflowed. The initial value of LVDCNT is H'00.

14.2.4 Clock Stop Register 2 (CKSTPR2)

Bit	7	6	5	4	3	2	1	0
	LVDCKSTP	—	—	PW2CKSTP	AECKSTP	WDCKSTP	PW1CKSTP	LDCKSTP
Initial value	1	1	1	1	1	1	1	1
Read/Write	R/W	—	—	R/W	R/W	R/W	R/W	R/W

CKSTPR2 is an 8-bit read/write register. It is used to control the module’s module standby mode. Only the bits relevant to the LVD function are described in this section. Refer to the sections on the other modules for information about the other bits.

Bit 7—LVD Module Standby Control (LVDCKSTP)

This bit is used to control setting of the LVD function to module standby status and cancellation of that status.

Bit 7 LVDCKSTP	Description	
0	Sets LVD to module standby status	
1	Cancels LVD module standby status	(initial value)

Note: This bit is implemented on the H8/38124 Group only. On other products it is always read as 1 and cannot be written to.

14.3 Operation

14.3.1 Power-On Reset Circuit

Figure 14.2 shows the timing of the operation of the power-on reset circuit. As the power-supply voltage rises, the capacitor which is externally connected to the $\overline{RES}$ pin is gradually charged via the on-chip pull-up resistor (typ. 100 kΩ). Since the state of the $\overline{RES}$ pin is transmitted within the chip, the prescaler S and the entire chip are in their reset states. When the level on the $\overline{RES}$ pin reaches the specified value, the prescaler S is released from its reset state and it starts counting. The OVF signal is generated to release the internal reset signal after the prescaler S has counted 131,072 clock (ϕ) cycles. The noise cancellation circuit of approximately 100 ns is incorporated to prevent the incorrect operation of the chip by noise on the $\overline{RES}$ pin.

To achieve stable operation of this LSI, the power supply needs to rise to its full level and settles within the specified time. The maximum time required for the power supply to rise and settle after power has been supplied (t_{PWON}) is determined by the oscillation frequency (f_{OSC}) and capacitance which is connected to $\overline{RES}$ pin ($C_{\overline{RES}}$). If t_{PWON} means the time required to reach 90 % of power supply voltage, the power supply circuit should be designed to satisfy the following formula.

$$t_{PWON}\ (\text{ms}) \leq 80 \times C_{\overline{RES}}\ (\mu\text{F}) \pm 10/f_{OSC}\ (\text{MHz})$$

($t_{PWON} \leq 3000$ ms, $C_{\overline{RES}} \geq 0.22$ μF, and $f_{OSC} = 10$ in 2-MHz to 10-MHz operation)

Note that the power supply voltage (Vcc) must fall below Vpor = 100 mV and rise after charge on the $\overline{RES}$ pin is removed. To remove charge on the $\overline{RES}$ pin, it is recommended that the diode should be placed near Vcc. If the power supply voltage (Vcc) rises from the point above Vpor, a power-on reset may not occur.

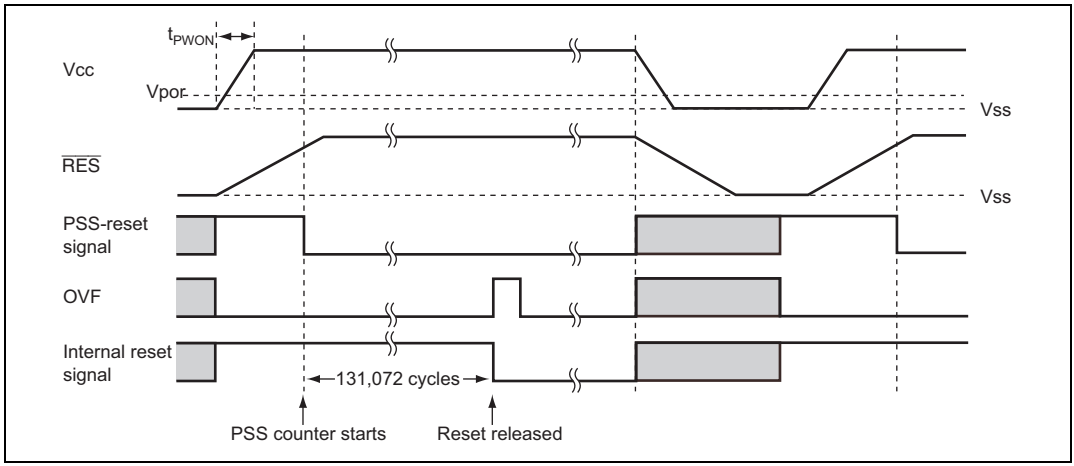

Figure 14.2 Operational Timing of Power-On Reset Circuit

14.3.2 Low-Voltage Detection Circuit

LVDR (Reset by Low Voltage Detect) Circuit:

Figure 14.3 shows the timing of the LVDR function. The LVDR enters the module-standby state after a power-on reset is canceled. To operate the LVDR, set the LVDE bit in LVDCR to 1, wait for 150 μs (t_{LVDON}) until the reference voltage and the low-voltage-detection power supply have stabilized, based on overflow of LVDNT, etc., then set the LVDRE bit in LVDCR to 1. After that, the output settings of ports must be made. To cancel the low-voltage detection circuit, first the LVDRE bit should be cleared to 0 and then the LVDE bit should be cleared to 0. The LVDE and LVDRE bits must not be cleared to 0 simultaneously because incorrect operation may occur.

When the power-supply voltage falls below the Vreset voltage (typ. = 2.3 V or 3.3 V), the LVDR clears the $\overline{\text{LVDRES}}$ signal to 0, and resets the prescaler S. The low-voltage detection reset state remains in place until a power-on reset is generated. When the power-supply voltage rises above the Vreset voltage again, the prescaler S starts counting. It counts 131,072 clock (ϕ) cycles, and then releases the internal reset signal. In this case, the LVDE, LVDSEL, and LVDRE bits in LVDCR are not initialized.

Note that if the power supply voltage (Vcc) falls below $V_{LVDRmin}$ = 1.0 V and then rises from that point, the low-voltage detection reset may not occur.

If the power supply voltage (Vcc) falls below Vpor = 100 mV, a power-on reset occurs.

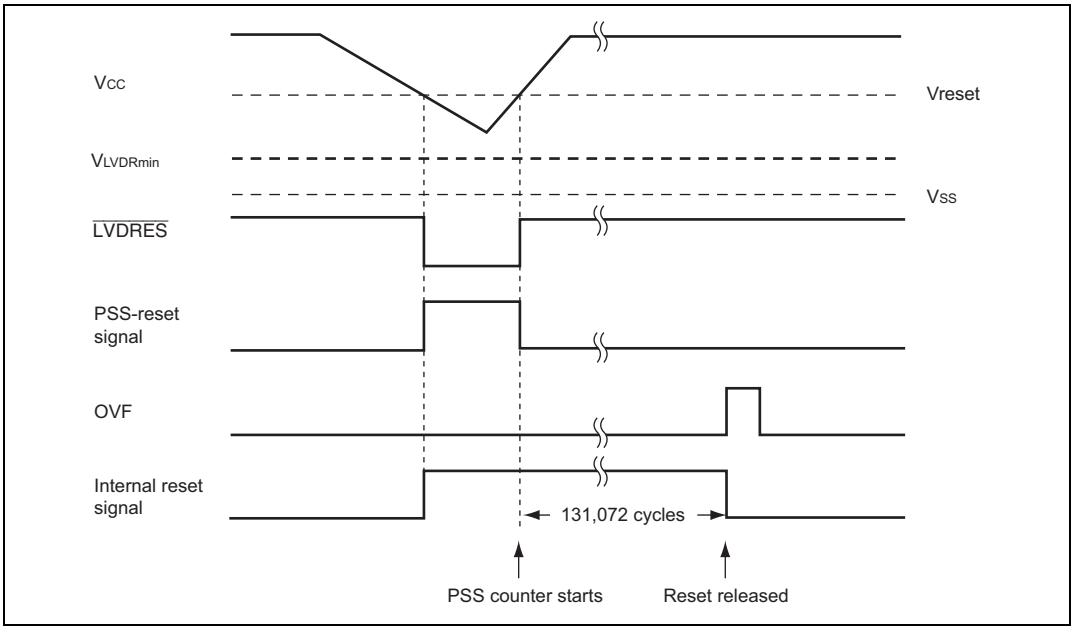

Figure 14.3 Operational Timing of LVDR Circuit

LVDI (Interrupt by Low Voltage Detect) Circuit:

Figure 14.4 shows the timing of LVDI functions. The LVDI enters the module-standby state after a power-on reset is canceled. To operate the LVDI, set the LVDE bit in LVDCR to 1, wait for 150 μs (t_{LVDON}) until the reference voltage and the low-voltage-detection power supply have stabilized, based on overflow of LVDNT, etc., then set the LVDDE and LVDUE bits in LVDCR to 1. After that, the output settings of ports must be made. To cancel the low-voltage detection circuit, first the LVDDE and LVDUE bits should all be cleared to 0 and then the LVDE bit should be cleared to 0. The LVDE bit must not be cleared to 0 at the same timing as the LVDDE and LVDUE bits because incorrect operation may occur.

When the power-supply voltage falls below Vint (D) (typ. = 3.7 V) voltage, the LVDI clears the $\overline{\text{LVDINT}}$ signal to 0 and the LVDDF bit in LVDSR is set to 1. If the LVDDE bit is 1 at this time, an IRQ0 interrupt request is simultaneously generated. In this case, the necessary data must be saved in the external EEPROM, etc, and a transition must be made to standby mode or watch mode. Until this processing is completed, the power supply voltage must be higher than the lower limit of the guaranteed operating voltage.

When the power-supply voltage does not fall below Vreset1 (typ. = 2.3 V) voltage but rises above Vint (U) (typ. = 4.0 V) voltage, the LVDI sets the $\overline{\text{LVDINT}}$ signal to 1. If the LVDUE bit is 1 at this time, the LVDUF bit in LVDSR is set to 1 and an IRQ0 interrupt request is simultaneously generated.

If the power supply voltage (Vcc) falls below Vreset1 (typ. = 2.3 V) voltage, the LVDR function is performed.

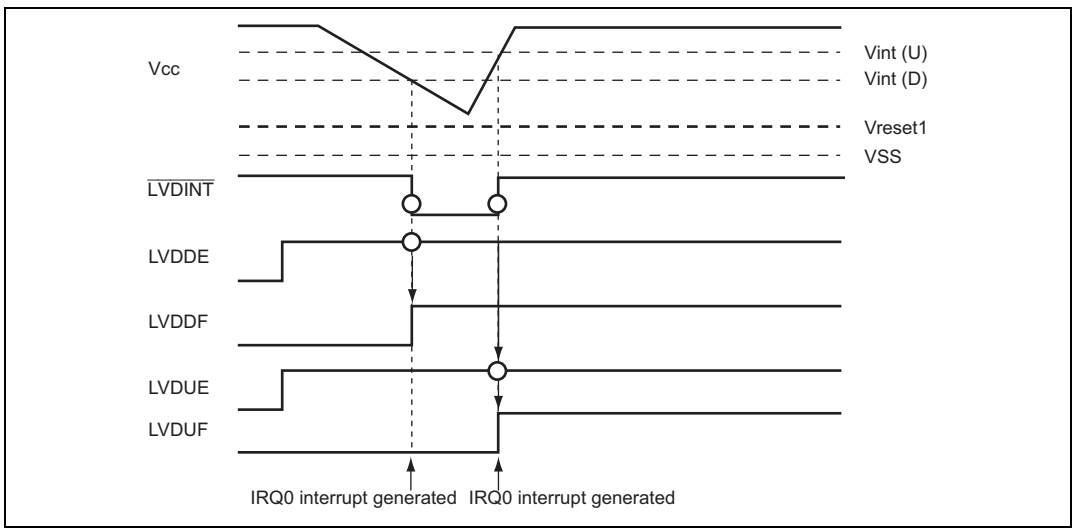

Figure 14.4 Operational Timing of LVDI Circuit

The reference voltage, power supply voltage drop detection level, and power supply voltage rise detection level can be input to the LSI from external sources via the Vref, extD, and extU pins. Figure 14.5 shows the operational timing using input from the Vref, extD, and extU pins.

First, make sure that the voltages input to pins extD and extU are set to higher levels than the interrupt detection voltage Vexd. After initial settings are made, a power supply drop interrupt is generated if the extD input voltage drops below Vexd. After a power supply drop interrupt is generated, if the external power supply voltage rises and the extU input voltage rises higher than Vexd, a power supply rise interrupt is generated. As with the on-chip circuit, the above function should be used in conjunction with LVDR (Vreset1) when the LVDI function is used.

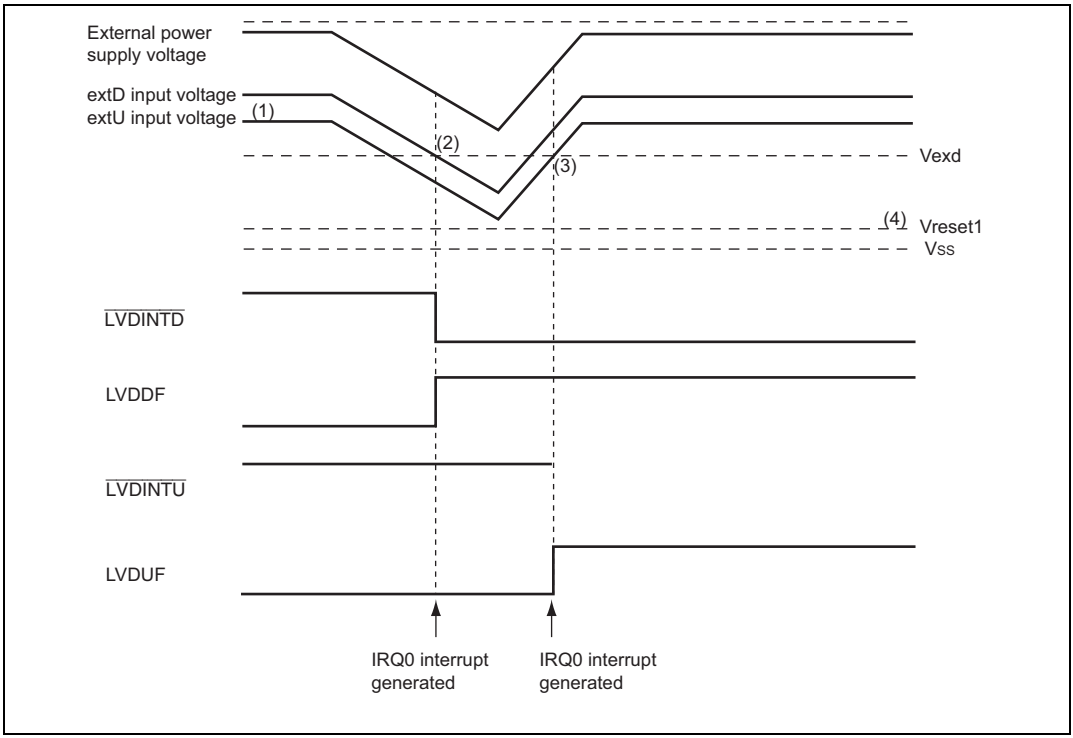

Figure 14.5 Operational Timing of Low-Voltage Detection Interrupt Circuit (Using Pins Vref, extD, and extU)

Figure 14.6 shows a usage example for the LVD function employing pins Vref, extD, and extU.

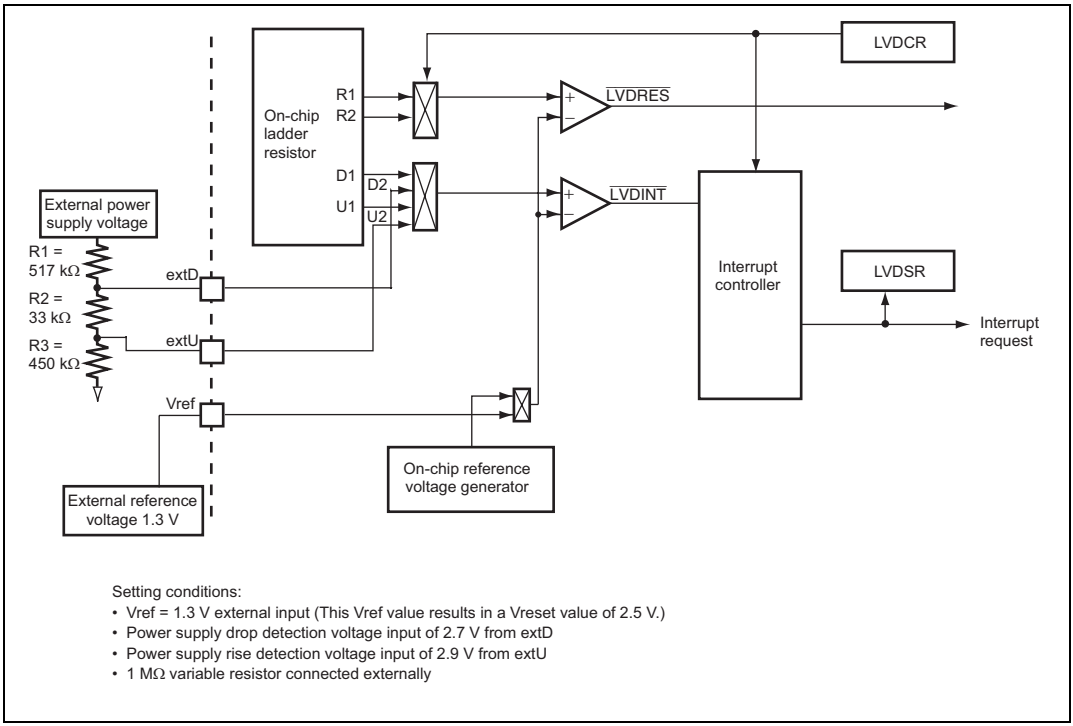

Figure 14.6 LVD Function Usage Example Employing Pins Vref, extD, and extU

Below is an explanation of the method for calculating the external resistor values when using the Vref, extD, and extU pins for input of reference and detection voltages from sources external to the LSI.

Procedure:

1. First, determine the overall resistance value, R. The current consumed by the resistor is determined by the value of R. A lower R will result in a greater current flow, and a higher R will result in a reduced current flow. The value of R is dependent on the configuration of the system in which the LSI is installed.

2. Determine the power supply drop detection voltage (Vint(D) and the power supply rise detection voltage (Vint(U).

3. Using a resistance value calculation table like the one shown below, plug in values for R, Vreset1, Vint(D), and Vint(U) to calculate the values of Vref, R1, R2, and R3.

Resistance Value Calculation Table

Ex. No	Vref (V)	R (kΩ)	Vreset1	Vint(D)	Vint(U)	R1 (kΩ)	R2 (kΩ)	R3 (kΩ)
1	1.30	1000	2.5	2.7	2.9	517	33	450
2	1.41	1000	2.7	2.9	3	514	16	470
3	1.57	1000	3	3.2	3.5	511	42	447
4	2.09	1000	4	4.5	4.7	536	20	444

4. Using an error calculation table like the one shown below, plug in values for R1, R2, R3, and Vref to calculate the deviation of Vreset1, Vint(D), and Vint(U). Make sure to double check the maximum and minimum values for each value.

Error Calculation Table

Vref (V)	R1 (kΩ)	R2 (kΩ)	R3 (kΩ)	Resistance Value Error (%) 5	Comparator Error (V)	Vreset1 (V)	Vint(D) (V)	Vint(U) (V)
1.3	517	33	450	R1+Err, R2/R3-Err	0.1	2.59	2.94	3.15
					0	2.49	2.84	3.05
					-0.1	2.39	2.74	2.95
				R1-Err, R2/R3+Err	0.1	2.59	2.66	2.85
					0	2.49	2.56	2.75
					-0.1	2.39	2.46	2.65
				R1/R2/R3 No Err	0.1	2.59	2.79	2.99
					0	2.49	2.69	2.89
					-0.1	2.39	2.59	2.79
				R1/R2+Err, R3-Err	0.1	2.59	2.93	3.16
					0	2.49	2.83	3.06
					-0.1	2.39	2.73	2.96
				R1/R2-Err, R3+Err	0.1	2.59	2.67	2.84
					0	2.49	2.57	2.74
					-0.1	2.39	2.47	2.64

Operation and Cancellation Setting Procedure Using LVDR and LVDI:

Settings should be made as indicated below in order to ensure proper operation of the low voltage detection circuit or to cancel operation. Figure 14.7 shows the setting timing for low voltage detection circuit operation and cancellation.

1. To turn on the low voltage detection circuit, first set the LVDE bit in LVDCR to 1.
2. After waiting for LVDCNT overflow, etc., to ensure that the stabilization time (t_{LVDON} = 150 μs) for the reference voltage and low voltage detection power supply has elapsed, clear bits LVDDF and LVDUF in LVDSR to 0. If necessary, set the LVDRE, LVDDE, and LVDUE bits in LVDCR to 1.
3. To cancel operation of the low voltage detection circuit, clear bits LVDRE, LVDDE, and LVDUE to 0, then clear bit LVDE to 0. Bit LVDE should not be cleared at the same time as bits LVDRE, LVDDE, and LVDUE to avoid malfunction.

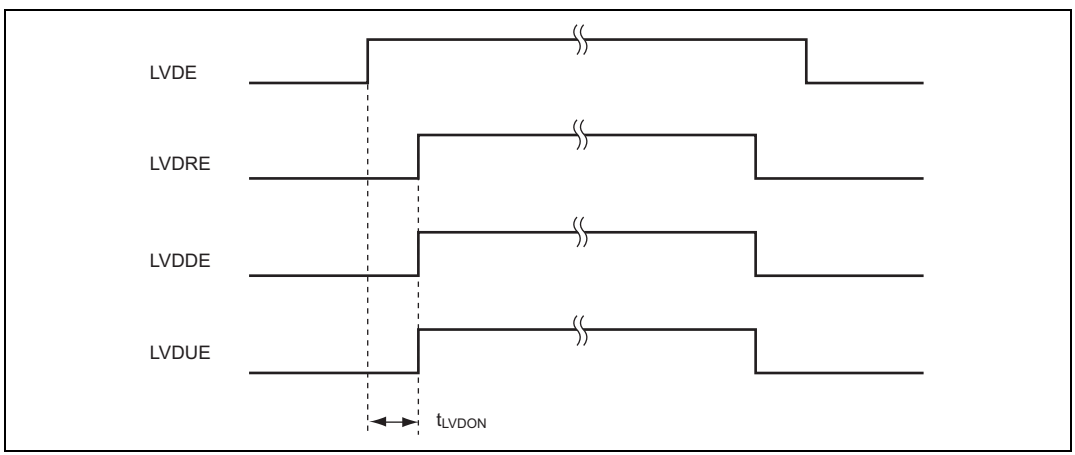

Figure 14.7 Low Voltage Detection Circuit Operation and Cancellation Setting Timing

Section 15 Power Supply Circuit (H8/38124 Group Only)

This LSI incorporates an internal power supply step-down circuit. Use of this circuit enables the internal power supply to be fixed at a constant level of approximately 3.0 V, independently of the voltage of the power supply connected to the external V_{CC} pin. As a result, the current consumed when an external power supply is used at 3.0 V or above can be held down to virtually the same low level as when used at approximately 3.0 V. If the external power supply is 3.0 V or below, the internal voltage will be practically the same as the external voltage. It is, of course, also possible to use the same level of external power supply voltage and internal power supply voltage without using the internal power supply step-down circuit.

15.1 When Using Internal Power Supply Step-Down Circuit

Connect the external power supply to the V_{CC} pin, and connect a capacitance of approximately 0.1 µF between CV_{CC} and V_{SS}, as shown in figure 15.1. The internal step-down circuit is made effective simply by adding this external circuit. In the external circuit interface, the external power supply voltage connected to V_{CC} and the GND potential connected to V_{SS} are the reference levels. For example, for port input/output levels, the V_{CC} level is the reference for the high level, and the V_{SS} level is that for the low level. The A/D converter analog power supply is not affected by the internal step-down circuit.

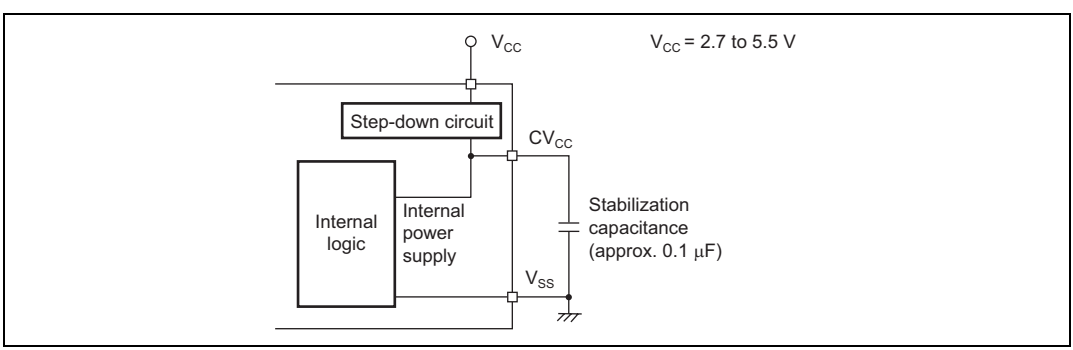

Figure 15.1 Power Supply Connection when Internal Step-Down Circuit is Used

15.2 When Not Using Internal Power Supply Step-Down Circuit

When the internal power supply step-down circuit is not used, connect the external power supply to the CV_{CC} pin and V_{CC} pin, as shown in figure 15.2. The external power supply is then input directly to the internal power supply. The permissible range for the power supply voltage is 2.7 V to 3.6 V. Operation cannot be guaranteed if a voltage outside this range (less than 3.0 V or more than 3.6 V) is input.

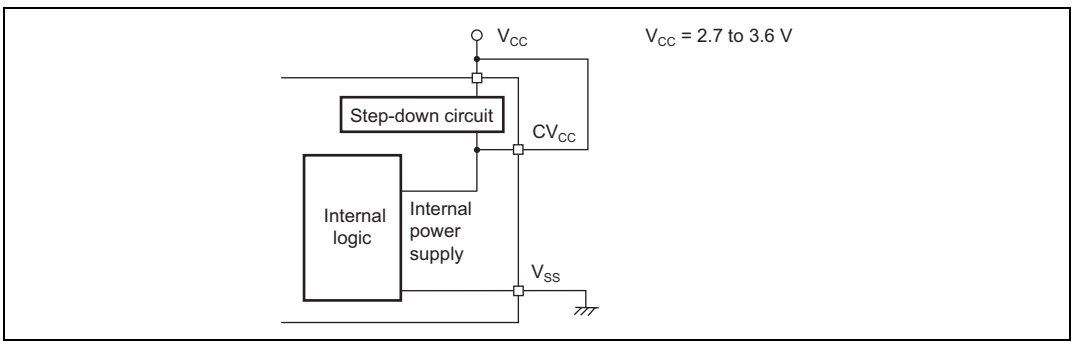

Figure 15.2 Power Supply Connection when Internal Step-Down Circuit is Not Used

Section 16 Electrical Characteristics

16.1 H8/38024 Group ZTAT Version and Mask ROM Version Absolute Maximum Ratings

Table 16.1 lists the absolute maximum ratings.

Table 16.1 Absolute Maximum Ratings

Item		Symbol	Value	Unit	Note
Power supply voltage		V_{CC}	–0.3 to +7.0	V	*
Analog power supply voltage		AV_{CC}	–0.3 to +7.0	V	
Programming voltage		V_{PP}	–0.3 to +13.0	V	
Input voltage	Ports other than Port B and IRQAEC	V_{in}	–0.3 to V_{CC} +0.3	V	
	Port B	AV_{in}	–0.3 to AV_{CC} +0.3	V	
	IRQAEC	HV_{in}	–0.3 to +7.3	V	
Port 9 pin voltage		V_{P9}	–0.3 to +7.3	V	
Operating temperature		T_{opr}	–20 to +75 (regular specifications)	°C	
			–40 to +85 (wide-range specifications)	°C	
Storage temperature		T_{stg}	–55 to +125	°C	

Note: * Permanent damage may occur to the chip if maximum ratings are exceeded. Normal operation should be under the conditions specified in Electrical Characteristics. Exceeding these values can result in incorrect operation and reduced reliability.

16.2 H8/38024 Group ZTAT Version and Mask ROM Version Electrical Characteristics

16.2.1 Power Supply Voltage and Operating Range

The power supply voltage and operating range are indicated by the shaded region in the figures.

Power Supply Voltage and Oscillator Frequency Range

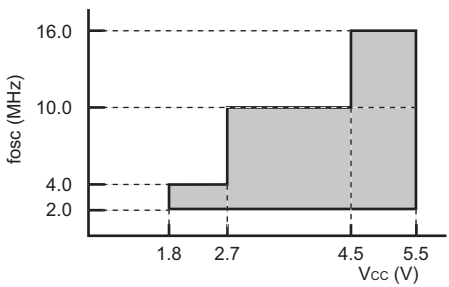

- Active (high-speed) mode
- Sleep (high-speed) mode

Note: 1. The fosc values are those when an oscillator is used; when an external clock is used the minimum value of fosc is 1 MHz.

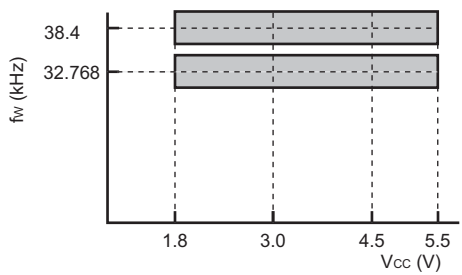

- All operating

Note: 2. When an oscillator is used for the subclock, hold Vcc at 2.2 V to 5.5 V from power-on until the oscillation settling time has elapsed.

Power Supply Voltage and Operating Frequency Range

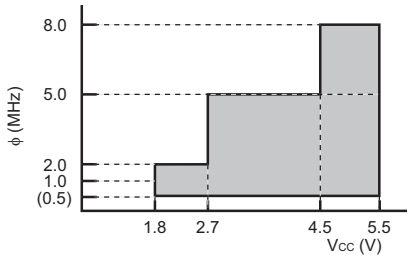

- Active (high-speed) mode
- Sleep (high-speed) mode (except CPU)

Note: 1. The figure in parentheses is the minimum operating frequency when an external clock is input. When using an oscillator, the minimum operating frequency (ϕ) is 1 MHz.

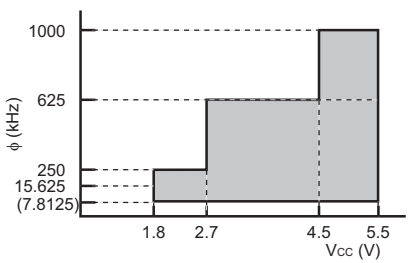

- Active (medium-speed) mode
- Sleep (medium-speed) mode (except A/D converter)

Note: 2. The figure in parentheses is the minimum operating frequency when an external clock is input. When using an oscillator, the minimum operating frequency (ϕ) is 15.625 kHz.

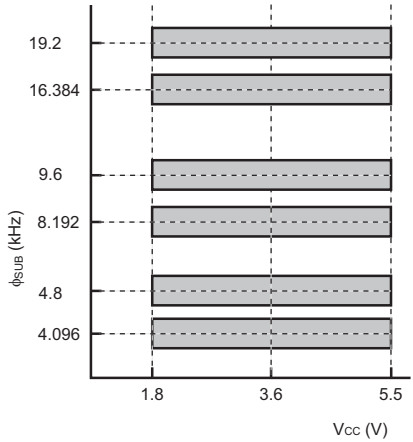

- Subactive mode
- Subsleep mode (except CPU)
- Watch mode (except CPU)

Analog Power Supply Voltage and A/D Converter Operating Range

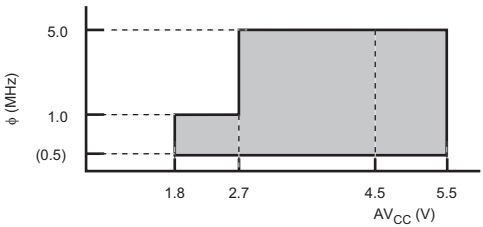

- Active (high-speed) mode
- Sleep (high-speed) mode

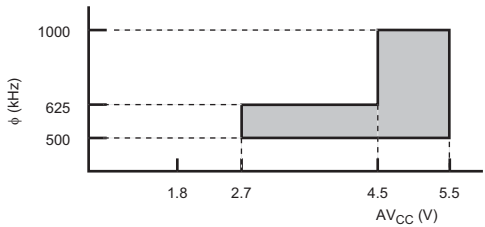

- Active (medium-speed) mode
- Sleep (medium-speed) mode

Note: 3. When AVCC = 1.8 V to 2.7 V, the operating range is limited to ϕ = 1.0 MHz when using an oscillator, and is ϕ = 0.5 MHz to 1.0 MHz when using an external clock.

16.2.2 DC Characteristics

Table 16.2 lists the DC characteristics of the H8/38024.

Table 16.2 DC Characteristics

V_{CC} = 1.8 V to 5.5 V, AV_{CC} = 1.8 V to 5.5 V, V_{SS} = AV_{SS} = 0.0 V, T_a = –20°C to +75°C (regular specifications), T_a = –40°C to +85°C (wide-range specifications), T_a = +75°C (Die) (including subactive mode) unless otherwise indicated.

Item	Symbol	Applicable Pins	Values Min	Values Typ	Values Max	Unit	Test Condition	Notes
Input high voltage	V_{IH}	$\overline{RES}$, $\overline{WKP}_0$ to $\overline{WKP}_7$, $\overline{IRQ}_0$, $\overline{IRQ}_3$, $\overline{IRQ}_4$, AEVL, AEVH, TMIC, TMIF, TMIG, $\overline{ADTRG}$, SCK_{32}	0.8 V_{CC}	—	V_{CC} + 0.3	V	V_{CC} = 4.0 V to 5.5 V	
			0.9 V_{CC}	—	V_{CC} + 0.3		Except the above	
		$\overline{IRQ}_1$	0.8 V_{CC}	—	AV_{CC} + 0.3	V	V_{CC} = 4.0 V to 5.5 V	
			0.9 V_{CC}	—	AV_{CC} + 0.3		Except the above	
		RXD_{32}, UD	0.7 V_{CC}	—	V_{CC} + 0.3	V	V_{CC} = 4.0 V to 5.5 V	
			0.8 V_{CC}	—	V_{CC} + 0.3		Except the above	
		OSC_1	0.8 V_{CC}	—	V_{CC} + 0.3	V	V_{CC} = 4.0 V to 5.5 V	
			0.9 V_{CC}	—	V_{CC} + 0.3		Except the above	
		X_1	0.9 V_{CC}	—	V_{CC} + 0.3	V	V_{CC} = 1.8 V to 5.5 V	
		$P1_3$, $P1_4$, $P1_6$, $P1_7$, $P3_0$ to $P3_7$, $P4_0$ to $P4_3$, $P5_0$ to $P5_7$, $P6_0$ to $P6_7$, $P7_0$ to $P7_7$, $P8_0$ to $P8_7$, PA_0 to PA_3	0.7 V_{CC}	—	V_{CC} + 0.3	V	V_{CC} = 4.0 V to 5.5 V	
			0.8 V_{CC}	—	V_{CC} + 0.3		Except the above	
		PB_0 to PB_7	0.7 V_{CC}	—	AV_{CC} + 0.3	V	V_{CC} = 4.0 V to 5.5 V	
			0.8 V_{CC}	—	AV_{CC} + 0.3		Except the above	
		IRQAEC	0.8 V_{CC}	—	7.3	V	V_{CC} = 4.0 V to 5.5 V	
			0.9 V_{CC}	—	7.3		Except the above	

Item	Symbol	Applicable Pins	Values Min	Values Typ	Values Max	Unit	Test Condition	Notes
Input low voltage	V_{IL}	$\overline{RES}$, $\overline{WKP}_0$ to $\overline{WKP}_7$, $\overline{IRQ}_0$, $\overline{IRQ}_1$, $\overline{IRQ}_3$, $\overline{IRQ}_4$, IRQAEC, AEVL, AEVH, TMIC, TMIF, TMIG, $\overline{ADTRG}$, SCK_{32}	–0.3	—	0.2 V_{CC}	V	V_{CC} = 4.0 V to 5.5 V	
			–0.3	—	0.1 V_{CC}		Except the above	
		RXD_{32}, UD	–0.3	—	0.3 V_{CC}	V	V_{CC} = 4.0 V to 5.5 V	
			–0.3	—	0.2 V_{CC}		Except the above	
		OSC_1	–0.3	—	0.2 V_{CC}	V	V_{CC} = 4.0 V to 5.5 V	
			–0.3	—	0.1 V_{CC}		Except the above	
		X_1	–0.3	—	0.1 V_{CC}	V	V_{CC} = 1.8 V to 5.5 V	
		$P1_3$, $P1_4$, $P1_6$, $P1_7$, $P3_0$ to $P3_7$, $P4_0$ to $P4_3$, $P5_0$ to $P5_7$, $P6_0$ to $P6_7$, $P7_0$ to $P7_7$, $P8_0$ to $P8_7$, PA_0 to PA_3, PB_0 to PB_7	–0.3	—	0.3 V_{CC}	V	V_{CC} = 4.0 V to 5.5 V	
			–0.3	—	0.2 V_{CC}		Except the above	
Output high voltage	V_{OH}	$P1_3$, $P1_4$, $P1_6$, $P1_7$, $P3_0$ to $P3_7$, $P4_0$ to $P4_2$, $P5_0$ to $P5_7$, $P6_0$ to $P6_7$, $P7_0$ to $P7_7$, $P8_0$ to $P8_7$, PA_0 to PA_3	V_{CC} – 1.0	—	—	V	V_{CC} = 4.0 V to 5.5 V $-I_{OH}$ = 1.0 mA	
			V_{CC} – 0.5	—	—		V_{CC} = 4.0 V to 5.5 V $-I_{OH}$ = 0.5 mA	
			V_{CC} – 0.3	—	—		$-I_{OH}$ = 0.1 mA	

Item	Symbol	Applicable Pins	Values Min	Values Typ	Values Max	Unit	Test Condition	Notes
Output low voltage	V_{OL}	$P1_3$, $P1_4$, $P1_6$, $P1_7$, $P4_0$ to $P4_2$	—	—	0.6	V	V_{CC} = 4.0 V to 5.5 V I_{OL} = 1.6 mA	
			—	—	0.5		I_{OL} = 0.4 mA	
		$P5_0$ to $P5_7$, $P6_0$ to $P6_7$, $P7_0$ to $P7_7$, $P8_0$ to $P8_7$, PA_0 to PA_3	—	—	0.5		I_{OL} = 0.4 mA	
		$P3_0$ to $P3_7$	—	—	1.5		V_{CC} = 4.0 V to 5.5 V I_{OL} = 10 mA	
			—	—	0.6		V_{CC} = 4.0 V to 5.5 V I_{OL} = 1.6 mA	
			—	—	0.5		I_{OL} = 0.4 mA	
		$P9_0$ to $P9_2$	—	—	0.5		V_{CC} = 2.2 to 5.5 V I_{OL} = 25 mA	*5
							I_{OL} = 15 mA	
			—	—	0.5		I_{OL} = 10 mA	*6
		$P9_3$ to $P9_5$	—	—	0.5		I_{OL} = 10 mA	
Input/output leakage current	$\|I_{IL}\|$	$\overline{RES}$, $P4_3$	—	—	20.0	μA	V_{IN} = 0.5 V to V_{CC} – 0.5 V	*2
			—	—	1.0			*1
		OSC_1, X_1, $P1_3$, $P1_4$, $P1_6$, $P1_7$, $P3_0$ to $P3_7$, $P4_0$ to $P4_2$, $P5_0$ to $P5_7$, $P6_0$ to $P6_7$, $P7_0$ to $P7_7$, $P8_0$ to $P8_7$, IRQAEC, $P9_0$ to $P9_5$, PA_0 to PA_3	—	—	1.0	μA	V_{IN} = 0.5 V to V_{CC} – 0.5 V	
		PB_0 to PB_7	—	—	1.0		V_{IN} = 0.5 V to AV_{CC} – 0.5 V	

Item	Symbol	Applicable Pins	Values Min	Values Typ	Values Max	Unit	Test Condition	Notes
Pull-up MOS current	$-I_p$	$P1_3$, $P1_4$, $P1_6$, $P1_7$, $P3_0$ to $P3_7$, $P5_0$ to $P5_7$, $P6_0$ to $P6_7$	50.0	—	300.0	μA	V_{CC} = 5 V, V_{IN} = 0 V	
			—	35.0	—		V_{CC} = 2.7 V, V_{IN} = 0 V	Reference value
Input capacitance	C_{IN}	All input pins except power supply, $\overline{RES}$, $P4_3$, PB_0 to PB_7	—	—	15.0	pF	f = 1 MHz, V_{IN} =0 V, T_a = 25°C	
		$\overline{IRQAEC}$	—	—	30.0			
		$\overline{RES}$	—	—	80.0			*2
			—	—	15.0			*1
		$P4_3$	—	—	50.0			*2
			—	—	15.0			*1
		PB_0 to PB_7	—	—	15.0			
Active mode current dissipation	I_{OPE1}	V_{CC}	—	7.0	10.0	mA	Active (high-speed) mode V_{CC} = 5 V, f_{OSC} = 10 MHz	*3 *4
	I_{OPE2}	V_{CC}	—	2.2	3.0	mA	Active (medium-speed) mode V_{CC} = 5 V, f_{OSC} = 10 MHz ϕ_{osc}/128	*3 *4
Sleep mode current dissipation	I_{SLEEP}	V_{CC}	—	3.8	5.0	mA	V_{CC}=5 V, f_{OSC}=10 MHz	*3 *4
Subactive mode current dissipation	I_{SUB}	V_{CC}	—	15.0	30.0	μA	V_{CC} = 2.7 V, LCD on 32 kHz crystal oscillator (ϕ_{SUB}=ϕ_w/2)	*3 *4
			—	8.0	—	μA	V_{CC} = 2.7 V, LCD on 32 kHz crystal oscillator (ϕ_{SUB}=ϕ_w/8)	*3 *4 Reference value
Subsleep mode current dissipation	I_{SUBSP}	V_{CC}	—	7.5	16.0	μA	V_{CC} = 2.7 V, LCD on 32 kHz crystal oscillator (ϕ_{SUB}=ϕ_w/2)	*3 *4

Item	Symbol	Applicable Pins	Values Min	Values Typ	Values Max	Unit	Test Condition	Notes
Watch mode current dissipation	I_{WATCH}	V_{CC}	—	3.8	6.0	μA	V_{CC} = 2.7 V, 32 kHz crystal oscillator LCD not used	*2 *3 *4
				2.8	6.0			*1 *3 *4
Standby mode current dissipation	I_{STBY}	V_{CC}	—	1.0	5.0	μA	32 kHz crystal oscillator not used	*3 *4
RAM data retaining voltage	V_{RAM}	V_{CC}	1.5	—	—	V		
Allowable output low current (per pin)	I_{OL}	Output pins except port 3 and 9	—	—	2.0	mA	V_{CC} = 4.0 V to 5.5 V	
		Port 3	—	—	10.0		V_{CC} = 4.0 V to 5.5 V	
		Output pins except port 9	—	—	0.5			
		$P9_0$ to $P9_2$	—	—	25.0		V_{CC} = 2.2 V to 5.5 V	*5
			—	—	15.0			
			—	—	10.0			
		$P9_3$ to $P9_5$	—	—	10.0			
Allowable output low current (total)	$\sum I_{OL}$	Output pins except ports 3 and 9	—	—	40.0	mA	V_{CC} = 4.0 V to 5.5 V	
		Port 3	—	—	80.0		V_{CC} = 4.0 V to 5.5 V	
		Output pins except port 9	—	—	20.0			
		Port 9	—	—	80.0			
Allowable output high current (per pin)	$-I_{OH}$	All output pins	—	—	2.0	mA	V_{CC} = 4.0 V to 5.5 V	
			—	—	0.2		Except the above	

Item	Symbol	Applicable Pins	Values Min	Values Typ	Values Max	Unit	Test Condition	Notes
Allowable output high current (total)	$\Sigma - I_{OH}$	All output pins	—	—	15.0	mA	V_{CC} = 4.0 V to 5.5 V	
			—	—	10.0		Except the above	

Notes: Connect the TEST pin to V_{SS}.

1. Applies to the Mask ROM products.
2. Applies to the HD64738024.
3. Pin states during current measurement.

Mode	$\overline{RES}$ Pin	Internal State	Other Pins	LCD Power Supply	Oscillator Pins
Active (high-speed) mode (I_{OPE1})	V_{CC}	Operates	V_{CC}	Halted	System clock oscillator: crystal Subclock oscillator: Pin X_1 = GND
Active (medium-speed) mode (I_{OPE2})					
Sleep mode	V_{CC}	Only timers operate	V_{CC}	Halted	
Subactive mode	V_{CC}	Operates	V_{CC}	Halted	System clock oscillator: crystal Subclock oscillator: crystal
Subsleep mode	V_{CC}	Only timers operate, CPU stops	V_{CC}	Halted	
Watch mode	V_{CC}	Only time base operates, CPU stops	V_{CC}	Halted	
Standby mode	V_{CC}	CPU and timers both stop	V_{CC}	Halted	System clock oscillator: crystal Subclock oscillator: Pin X_1 = GND

4. Excludes current in pull-up MOS transistors and output buffers.
5. When the PIOFF bit in the port mode register 9 is 0.
6. When the PIOFF bit in the port mode register 9 is 1.

16.2.3 AC Characteristics

Table 16.3 lists the control signal timing, and tables 16.4 lists the serial interface timing of the H8/38024.

Table 16.3 Control Signal Timing

V_{CC} = 1.8 V to 5.5 V, AV_{CC} = 1.8 V to 5.5 V, V_{SS} = AV_{SS} = 0.0 V, T_a = –20°C to +75°C (regular specifications), T_a = –40°C to +85°C (wide-range specifications), T_a = +75°C (Die) (including subactive mode) unless otherwise indicated.

Item	Symbol	Applicable Pins	Values Min	Values Typ	Values Max	Unit	Test Condition	Reference Figure
System clock oscillation frequency	f_{OSC}	OSC_1, OSC_2	2.0	—	16.0	MHz	V_{CC} = 4.5 V to 5.5 V	
			2.0	—	10.0		V_{CC} = 2.7 V to 5.5 V	
			2.0	—	4.0		Except the above	
OSC clock (ϕ_{OSC}) cycle time	t_{OSC}	OSC_1, OSC_2	62.5	—	500 (1000)	ns	V_{CC} = 4.5 V to 5.5 V	Figure 16.2 *2
			100	—	500 (1000)		V_{CC} = 2.7 V to 5.5 V	
			250	—	500 (1000)		Except the above	
System clock (ϕ) cycle time	t_{cyc}		2	—	128	t_{OSC}		
			—	—	128	µs		
Subclock oscillation frequency	f_W	X_1, X_2	—	32.768 or 38.4	—	kHz		
Watch clock (ϕ_W) cycle time	t_W	X_1, X_2	—	30.5 or 26.0	—	µs		Figure 16.2
Subclock (ϕ_{SUB}) cycle time	t_{subcyc}		2	—	8	t_W		*1
Instruction cycle time			2	—	—	t_{cyc} t_{subcyc}		
Oscillation stabilization time	t_{rc}	OSC_1, OSC_2	—	20	45	µs	Figure 16.9 V_{CC} = 2.2 V to 5.5 V	Figure 16.9
			—	—	50	ms	Except the above	
		X_1, X_2	—	—	2.0	s	V_{CC} = 2.7 V to 5.5 V	*3
			—	—	10.0		V_{CC} = 2.2 V to 5.5 V	

Item	Symbol	Applicable Pins	Values Min	Values Typ	Values Max	Unit	Test Condition	Reference Figure
External clock high width	t_{CPH}	OSC_1	25	—	—	ns	V_{CC} = 4.5 V to 5.5 V	Figure 16.2
			40	—	—		V_{CC} = 2.7 V to 5.5 V	
			100	—	—		Except the above	
		X_1	—	15.26 or 13.02	—	µs		
External clock low width	t_{CPL}	OSC_1	25	—	—	ns	V_{CC} = 4.5 V to 5.5 V	Figure 16.2
			40	—	—		V_{CC} = 2.7 V to 5.5 V	
			100	—	—		Except the above	
		X_1	—	15.26 or 13.02	—	µs		
External clock rise time	t_{CPr}	OSC_1	—	—	6	ns	V_{CC} = 4.5 V to 5.5 V	Figure 16.2
			—	—	10		V_{CC} = 2.7 V to 5.5 V	
			—	—	25		Except the above	
		X_1	—	—	55.0	ns		
External clock fall time	t_{CPf}	OSC_1	—	—	6	ns	V_{CC} = 4.5 V to 5.5 V	Figure 16.2
			—	—	10		V_{CC} = 2.7 V to 5.5 V	
			—	—	25		Except the above	
		X_1	—	—	55.0	ns		
Pin $\overline{RES}$ low width	t_{REL}	$\overline{RES}$	10	—	—	t_{cyc}		Figure 16.3
Input pin high width	t_{IH}	$\overline{IRQ_0}$, $\overline{IRQ_1}$, $\overline{IRQ_3}$, $\overline{IRQ_4}$, IRQAEC, $\overline{WKP_0}$ to $\overline{WKP_7}$, TMIC, TMIF, TMIG, $\overline{ADTRG}$	2	—	—	t_{cyc} t_{subcyc}		Figure 16.4
		AEVL, AEVH	0.5	—	—	t_{osc}		
Input pin low width	t_{IL}	$\overline{IRQ_0}$, $\overline{IRQ_1}$, $\overline{IRQ_3}$, $\overline{IRQ_4}$, IRQAEC, $\overline{WKP_0}$ to $\overline{WKP_7}$, TMIC, TMIF, TMIG, $\overline{ADTRG}$	2	—	—	t_{cyc} t_{subcyc}		Figure 16.4
		AEVL, AEVH	0.5	—	—	t_{osc}		

Item	Symbol	Applicable Pins	Values Min	Values Typ	Values Max	Unit	Test Condition	Reference Figure
UD pin minimum transition width	t_{UDH} t_{UDL}	UD	4	—	—	t_{cyc} t_{subcyc}		Figure 16.7

Notes: 1. Selected with SA1 and SA0 of system control register 2 (SYSCR2).
2. The figure in parentheses applies when an external clock is used.
3. After powering on, hold V_{CC} at 2.2 V to 5.5 V until the chip's oscillation settling time has elapsed.

Table 16.4 Serial Interface (SCI3) Timing

V_{CC} = 1.8 V to 5.5 V, AV_{CC} = 1.8 V to 5.5 V, V_{SS} = AV_{SS} = 0.0 V, T_a = –20°C to +75°C (regular specifications), T_a = –40°C to +85°C (wide-range specifications), T_a = +75°C (Die) (including subactive mode) unless otherwise indicated.

Item		Symbol	Values Min	Values Typ	Values Max	Unit	Test Conditions	Reference Figure
Input clock cycle	Asynchronous	t_{scyc}	4	—	—	t_{cyc} or		Figure 16.5
	Synchronous		6	—	—	t_{subcyc}		
Input clock pulse width		t_{SCKW}	0.4	—	0.6	t_{scyc}		Figure 16.5
Transmit data delay time (synchronous)		t_{TXD}	—	—	1	t_{cyc} or	V_{CC} = 4.0 V to 5.5 V	Figure 16.6
			—	—	1	t_{subcyc}	Except the above	
Receive data setup time (synchronous)		t_{RXS}	200.0	—	—	ns	V_{CC} = 4.0 V to 5.5 V	Figure 16.6
			400.0	—	—		Except the above	Figure 16.6
Receive data hold time (synchronous)		t_{RXH}	200.0	—	—	ns	V_{CC} = 4.0 V to 5.5 V	Figure 16.6
			400.0	—	—		Except the above	Figure 16.6

16.2.4 A/D Converter Characteristics

Table 16.5 shows the A/D converter characteristics of the H8/38024.

Table 16.5 A/D Converter Characteristics

V_{CC} = 1.8 V to 5.5 V, V_{SS} = AV_{SS} = 0.0 V, T_a = –20°C to +75°C (regular specifications), T_a = –40°C to +85°C (wide-range specifications), T_a = +75°C (Die) unless otherwise indicated.

Item	Symbol	Applicable Pins	Values Min	Values Typ	Values Max	Unit	Test Condition	Reference Figure
Analog power supply voltage	AV_{CC}	AV_{CC}	1.8	—	5.5	V		*1
Analog input voltage	AV_{IN}	AN_0 to AN_7	– 0.3	—	AV_{CC} + 0.3	V		
Analog power supply current	AI_{OPE}	AV_{CC}	—	—	1.5	mA	AV_{CC} = 5.0 V	
	AI_{STOP1}	AV_{CC}	—	600	—	µA		*2 Reference value
	AI_{STOP2}	AV_{CC}	—	—	5	µA		*3
Analog input capacitance	C_{AIN}	AN_0 to AN_7	—	—	15.0	pF		
Allowable signal source impedance	R_{AIN}		—	—	10.0	kΩ		
Resolution (data length)			—	—	10	bit		
Nonlinearity error			—	—	±2.5	LSB	AV_{CC} = 2.7 V to 5.5 V V_{CC} = 2.7 V to 5.5 V	
			—	—	±5.5		AV_{CC} = 2.0 V to 5.5 V V_{CC} = 2.0 V to 5.5 V	
			—	—	±7.5		Except the above	*4
Quantization error			—	—	±0.5	LSB		

Item	Symbol	Applicable Pins	Values Min	Values Typ	Values Max	Unit	Test Condition	Reference Figure
Absolute accuracy			—	—	±3.0	LSB	AV_{CC} = 2.7 V to 5.5 V V_{CC} = 2.7 V to 5.5 V	
			—	—	±6.0		AV_{CC} = 2.0 V to 5.5 V V_{CC} = 2.0 V to 5.5 V	
			—	—	±8.0		Except the above	*4
Conversion time			12.4	—	124	μs	AV_{CC} = 2.7 V to 5.5 V V_{CC} = 2.7 V to 5.5 V	
			62	—	124		Except the above	

Notes: 1. Set $AV_{CC} = V_{CC}$ when the A/D converter is not used.
2. AI_{STOP1} is the current in active and sleep modes while the A/D converter is idle.
3. AI_{STOP2} is the current at reset and in standby, watch, subactive, and subsleep modes while the A/D converter is idle.
4. Conversion time 62 μs

16.2.5 LCD Characteristics

Table 16.6 shows the LCD characteristics.

Table 16.6 LCD Characteristics

V_{CC} = 1.8 V to 5.5 V, AV_{CC} = 1.8 V to 5.5 V, V_{SS} = AV_{SS} = 0.0 V, T_a = –20°C to +75°C (regular specifications), T_a = –40°C to +85°C (wide-range specifications), T_a = +75°C (Die) (including subactive mode) unless otherwise specified.

Item	Symbol	Applicable Pins	Values Min	Values Typ	Values Max	Unit	Test Conditions	Reference Figure
Segment driver drop voltage	V_{DS}	SEG_1 to SEG_{32}	—	—	0.6	V	I_D = 2 µA V_1 = 2.7 V to 5.5 V	*1
Common driver drop voltage	V_{DC}	COM_1 to COM_4	—	—	0.3	V	I_D = 2 µA V_1 = 2.7 V to 5.5 V	*1
LCD power supply split-resistance	R_{LCD}		0.5	3.0	9.0	MΩ	Between V_1 and V_{SS}	
Liquid crystal display voltage	V_{LCD}	V_1	2.2	—	5.5	V		*2

Notes: 1. The voltage drop from power supply pins V_1, V_2, V_3, and VSS to each segment pin or common pin.

2. When the liquid crystal display voltage is supplied from an external power source, ensure that the following relationship is maintained: $V_{CC} \geq V_1 \geq V_2 \geq V_3 \geq V_{SS}$.

16.3 H8/38024 Group F-ZTAT Version and H8/38024R Group F-ZTAT Version Absolute Maximum Ratings

Table 16.7 lists the absolute maximum ratings.

Table 16.7 Absolute Maximum Ratings

Item		Symbol	Value	Unit	Note
Power supply voltage		V_{CC}	–0.3 to +4.3	V	*1
Analog power supply voltage		AV_{CC}	–0.3 to +4.3	V	
Input voltage	Ports other than Port B and IRQAEC	V_{in}	–0.3 to V_{CC} +0.3	V	
	Port B	AV_{in}	–0.3 to AV_{CC} +0.3	V	
	IRQAEC	HV_{in}	–0.3 to +7.3	V	
Port 9 pin voltage		V_{P9}	–0.3 to +7.3	V	
Operating temperature		T_{opr}	–20 to +75*2 (regular specifications)	°C	
			–40 to +85*2 (wide-range specifications)	°C	
			+75 (products shipped as chips)*3		
Storage temperature		T_{stg}	–55 to +125	°C	

Notes: 1. Permanent damage may occur to the chip if maximum ratings are exceeded. Normal operation should be under the conditions specified in Electrical Characteristics. Exceeding these values can result in incorrect operation and reduced reliability.

2. The operating temperature ranges for flash memory programming/erasing are T_a = –20°C to +75°C.

3. Power may be applied when the temperature is between –20°C and +75°C.

16.4 H8/38024 Group F-ZTAT Version and H8/38024R Group F-ZTAT Version Electrical Characteristics

16.4.1 Power Supply Voltage and Operating Range

The power supply voltage and operating range are indicated by the shaded region in the figures.

Power Supply Voltage and Oscillator Frequency Range

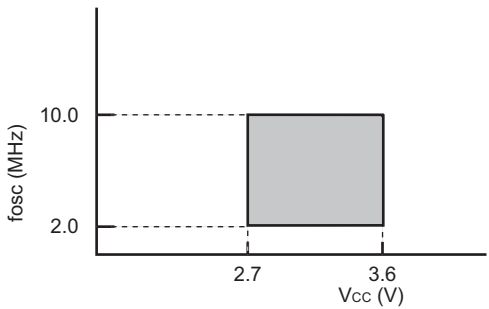

- Active (high-speed) mode
- Sleep (high-speed) mode

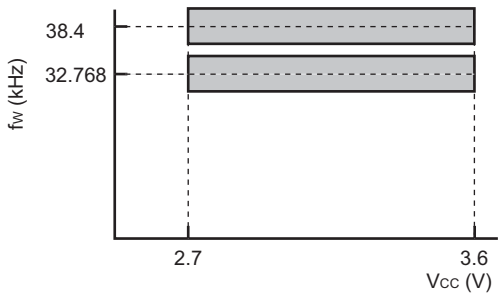

- All operating

Note: The fosc values are those when an oscillator is used; when an external clock is used the minimum value of fosc is 1 MHz.

Power Supply Voltage and Operating Frequency Range

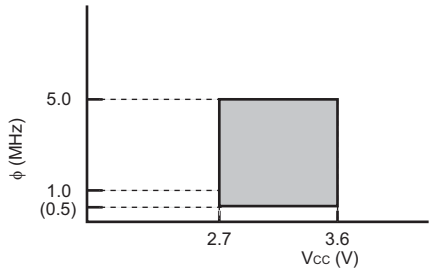

- Active (high-speed) mode
- Sleep (high-speed) mode (except CPU)

Note: 1. The figure in parentheses is the minimum operating frequency when an external clock is input. When using an oscillator, the minimum operating frequency (ϕ) is 1 MHz.

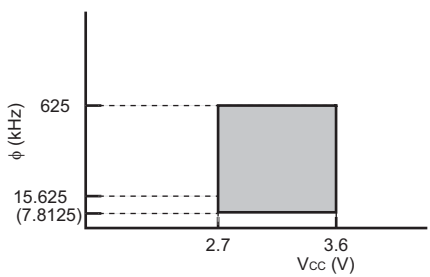

- Active (medium-speed) mode
- Sleep (medium-speed) mode (except A/D converter)

Note: 2. The figure in parentheses is the minimum operating frequency when an external clock is input. When using an oscillator, the minimum operating frequency (ϕ) is 15.625 kHz.

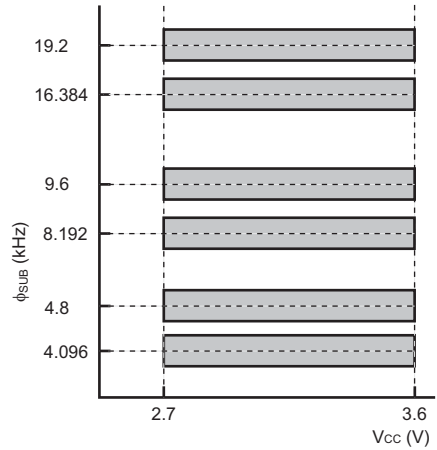

- Subactive mode
- Subsleep mode (except CPU)
- Watch mode (except CPU)

Analog Power Supply Voltage and A/D Converter Operating Range

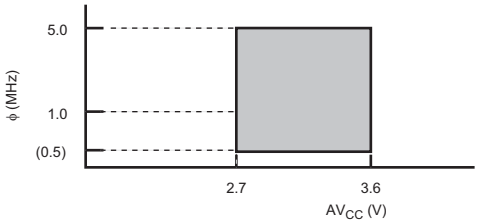

- Active (high-speed) mode
- Sleep (high-speed) mode

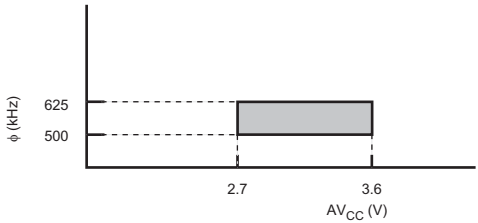

- Active (medium-speed) mode
- Sleep (medium-speed) mode

16.4.2 DC Characteristics

Table 16.8 lists the DC characteristics of the HD64F38024 and HD64F38024R.

Table 16.8 DC Characteristics

V_{CC} = 2.7 V to 3.6 V, AV_{CC} = 2.7 V to 3.6 V, V_{SS} = AV_{SS} = 0.0 V

Item	Symbol	Applicable Pins	Values Min	Values Typ	Values Max	Unit	Test Condition	Notes
Input high voltage	V_{IH}	$\overline{RES}$, $\overline{WKP}_0$ to $\overline{WKP}_7$, $\overline{IRQ}_0$, $\overline{IRQ}_3$, $\overline{IRQ}_4$, AEVL, AEVH, TMIC, TMIF, TMIG, $\overline{ADTRG}$, SCK_{32}	0.9 V_{CC}	—	V_{CC} + 0.3	V		
		$\overline{IRQ}_1$	0.9 V_{CC}	—	AV_{CC} + 0.3	V		
		RXD_{32}, UD	0.8 V_{CC}	—	V_{CC} + 0.3	V		
		OSC_1	0.9 V_{CC}	—	V_{CC} + 0.3	V		
		X_1	0.9 V_{CC}	—	V_{CC} + 0.3	V		
		$P1_3$, $P1_4$, $P1_6$, $P1_7$, $P3_0$ to $P3_7$, $P4_0$ to $P4_3$, $P5_0$ to $P5_7$, $P6_0$ to $P6_7$, $P7_0$ to $P7_7$, $P8_0$ to $P8_7$, PA_0 to PA_3	0.8 V_{CC}	—	V_{CC} + 0.3	V		
		PB_0 to PB_7	0.8 V_{CC}	—	AV_{CC} + 0.3	V		
		IRQAEC, $P9_5$ *5	0.9 V_{CC}	—	7.3	V		

Item	Symbol	Applicable Pins	Values Min	Typ	Max	Unit	Test Condition	Notes
Input low voltage	V_{IL}	$\overline{RES}$, $\overline{WKP}_0$ to $\overline{WKP}_7$, $\overline{IRQ}_0$, $\overline{IRQ}_1$, $\overline{IRQ}_3$, $\overline{IRQ}_4$, IRQAEC, $P9_5$*5, AEVL, AEVH, TMIC, TMIF, TMIG, $\overline{ADTRG}$, SCK_{32}	–0.3	—	0.1 V_{CC}	V		
		RXD_{32}, UD	–0.3	—	0.2 V_{CC}	V		
		OSC_1	–0.3	—	0.1 V_{CC}	V		
		X_1	–0.3	—	0.1 V_{CC}	V		
		$P1_3$, $P1_4$, $P1_6$, $P1_7$, $P3_0$ to $P3_7$, $P4_0$ to $P4_3$, $P5_0$ to $P5_7$, $P6_0$ to $P6_7$, $P7_0$ to $P7_7$, $P8_0$ to $P8_7$, PA_0 to PA_3, PB_0 to PB_7	–0.3	—	0.2 V_{CC}	V		
Output high voltage	V_{OH}	$P1_3$, $P1_4$, $P1_6$, $P1_7$, $P3_0$ to $P3_7$, $P4_0$ to $P4_2$, $P5_0$ to $P5_7$, $P6_0$ to $P6_7$, $P7_0$ to $P7_7$, $P8_0$ to $P8_7$, PA_0 to PA_3	V_{CC} – 1.0	—	—	V	$-I_{OH}$ = 1.0 mA	
			V_{CC} – 0.3	—	—		$-I_{OH}$ = 0.1 mA	

Item	Symbol	Applicable Pins	Values Min	Typ	Max	Unit	Test Condition	Notes
Output low voltage	V_{OL}	$P1_3$, $P1_4$, $P1_6$, $P1_7$, $P3_0$ to $P3_7$, $P4_0$ to $P4_2$, $P5_0$ to $P5_7$, $P6_0$ to $P6_7$, $P7_0$ to $P7_7$, $P8_0$ to $P8_7$, PA_0 to PA_3	—	—	0.5	V	I_{OL} = 0.4 mA	
		$P9_0$ to $P9_2$	—	—	0.5	V	I_{OL} = 25 mA	*1
							I_{OL} = 10 mA	*2
		$P9_3$ to $P9_5$	—	—	0.5	V	I_{OL} = 10 mA	
Input/output leakage current	$\lvert I_{IL} \rvert$	$\overline{RES}$, $P4_3$, OSC_1, X_1, $P1_3$, $P1_4$, $P1_6$, $P1_7$, $P3_0$ to $P3_7$, $P4_0$ to $P4_2$, $P5_0$ to $P5_7$, $P6_0$ to $P6_7$, $P7_0$ to $P7_7$, $P8_0$ to $P8_7$, IRQAEC, $P9_0$ to $P9_5$, PA_0 to PA_3	—	—	1.0	μA	V_{IN} = 0.5 V to V_{CC} – 0.5 V	
		PB_0 to PB_7	—	—	1.0	μA	V_{IN} = 0.5 V to AV_{CC} – 0.5 V	
Pull-up MOS current	$-I_p$	$P1_3$, $P1_4$, $P1_6$, $P1_7$, $P3_0$ to $P3_7$, $P5_0$ to $P5_7$, $P6_0$ to $P6_7$	30	—	180	μA	V_{CC} = 3 V, V_{IN} = 0 V	
Input capacitance	C_{IN}	All input pins except power supply and IRQAEC	—	—	15.0	pF	f = 1 MHz, V_{IN} =0 V, T_a = 25°C	
		IRQAEC	—	—	30.0	pF		

Item	Symbol	Applicable Pins	Values Min	Values Typ	Values Max	Unit	Test Condition	Notes
Active mode current dissipation	I_{OPE1}	V_{CC}	—	1.2	—	mA	Active (high-speed) mode V_{CC} = 3 V, f_{OSC} = 2 MHz	*3 *4 Max. guideline = 1.1 × typ.
			—	1.8	—	mA	Active (high-speed) mode V_{CC} = 3 V, f_{OSC} = 4 MHz	*3 *4 Max. guideline = 1.1 × typ.
			—	4.0	6.0	mA	Active (high-speed) mode V_{CC} = 3 V, f_{OSC} = 10 MHz	*3 *4
	I_{OPE2}	V_{CC}	—	0.7	—	mA	Active (medium-speed) mode V_{CC} = 3 V, f_{OSC} = 2 MHz ϕ_{osc}/128	*3 *4 Max. guideline = 1.1 × typ.
			—	0.8	—	mA	Active (medium-speed) mode V_{CC} = 3 V, f_{OSC} = 4 MHz ϕ_{osc}/128	*3 *4 Max. guideline = 1.1 × typ.
			—	1.2	1.8	mA	Active (medium-speed) mode V_{CC} = 3 V, f_{OSC} = 10 MHz ϕ_{osc}/128	*3 *4

Item	Symbol	Applicable Pins	Values Min	Values Typ	Values Max	Unit	Test Condition	Notes
Sleep mode current dissipation	I_{SLEEP}	V_{CC}	—	1.0	—	mA	V_{CC}= 3 V, f_{OSC}= 2 MHz	*3 *4 Max. guideline = 1.1 × typ.
			—	1.5	—	mA	V_{CC}= 3 V, f_{OSC}= 4 MHz	*3 *4 Max. guideline = 1.1 × typ.
			—	3.2	4.8	mA	V_{CC}= 3 V, f_{OSC}= 10 MHz	*3 *4
Subactive mode current dissipation	I_{SUB}	V_{CC}	—	10	—	µA	V_{CC} = 2.7 V, LCD on 32 kHz crystal resonator ($\phi_{SUB}=\phi_w/8$)	*3 *4 Reference value
			—	20	40	µA	V_{CC} = 2.7 V, LCD on 32 kHz External Clock ($\phi_{SUB}=\phi_w/2$)	*3 *4
			—	17	40	µA	V_{CC} = 2.7 V, LCD on 32 kHz crystal resonator ($\phi_{SUB}=\phi_w/2$)	
Subsleep mode current dissipation	I_{SUBSP}	V_{CC}	—	4.8	16.0	µA	V_{CC} = 2.7 V, LCD on 32 kHz External Clock ($\phi_{SUB}=\phi_w/2$)	*3 *4
			—	5.4	16.0	µA	V_{CC} = 2.7 V, LCD on 32 kHz crystal resonator ($\phi_{SUB}=\phi_w/2$)	

Item	Symbol	Applicable Pins	Values Min	Values Typ	Values Max	Unit	Test Condition	Notes
Watch mode current dissipation	I_{WATCH}	V_{CC}	—	2.0	—	μA	V_{CC} = 2.7 V, T_a = 25°C 32 kHz External Clock LCD not used	*3 *4 Reference value
			—	2.6	—	μA	V_{CC} = 2.7 V, T_a = 25°C 32 kHz crystal resonator LCD not used	
			—	2.0	6.0	μA	V_{CC} = 2.7 V, 32 kHz External Clock LCD not used	*3 *4
			—	2.6	6.0	μA	V_{CC} = 2.7 V, 32 kHz crystal resonator LCD not used	
Standby mode current dissipation	I_{STBY}	V_{CC}	—	0.3	—	μA	V_{CC} = 3.0 V, T_a = 25°C 32 kHz crystal resonator not used	*3 *4 Reference value
			—	1.0	5.0	μA	32 kHz crystal resonator not used	*3 *4
RAM data retaining voltage	V_{RAM}	V_{CC}	2.0	—	—	V		
Allowable output low current (per pin)	I_{OL}	Output pins except port 9	—	—	0.5	mA		
		$P9_0$ to $P9_2$	—	—	25.0	mA		*1
			—	—	10.0			*2
		$P9_3$ to $P9_5$	—	—	10.0	mA		*5
Allowable output low current (total)	ΣI_{OL}	Output pins except port 9	—	—	20.0	mA		
		Port 9	—	—	80.0	mA		

Item	Symbol	Applicable Pins	Values Min	Typ	Max	Unit	Test Condition	Notes
Allowable output high current (per pin)	$-I_{OH}$	All output pins	—	—	0.2	mA		
Allowable output high current (total)	$\sum - I_{OH}$	All output pins	—	—	10.0	mA		

Notes: Connect the TEST pin to V_{SS}.

1. Applied when the PIOFF bit in the port mode register 9 is 0.
2. Applied when the PIOFF bit in the port mode register 9 is 1.
3. Pin states during current measurement.

Mode	$\overline{RES}$ Pin	Internal State	Other Pins	LCD Power Supply	Oscillator Pins
Active (high-speed) mode (I_{OPE1})	V_{CC}	Operates	V_{CC}	Halted	System clock oscillator: crystal Subclock oscillator: Pin X_1 = GND
Active (medium-speed) mode (I_{OPE2})					
Sleep mode	V_{CC}	Only on-chip timers operate	V_{CC}	Halted	
Subactive mode	V_{CC}	Operates	V_{CC}	Halted	System clock oscillator: crystal Subclock oscillator: crystal
Subsleep mode	V_{CC}	Only on-chip timers operate, CPU stops	V_{CC}	Halted	
Watch mode	V_{CC}	Only time base operates, CPU stops	V_{CC}	Halted	
Standby mode	V_{CC}	CPU and timers both stop	V_{CC}	Halted	System clock oscillator: crystal Subclock oscillator: Pin X_1 = GND

4. Excludes current in pull-up MOS transistors and output buffers.
5. Used for the judgment of user mode or boot mode when the reset is released.

16.4.3 AC Characteristics

Table 16.9 lists the control signal timing, and tables 16.10 lists the serial interface timing of the H8/38024F.

Table 16.9 Control Signal Timing

V_{CC} = 2.7 V to 3.6 V, AV_{CC} = 2.7 V to 3.6 V, V_{SS} = AV_{SS} = 0.0 V

Item	Symbol	Applicable Pins	Values Min	Values Typ	Values Max	Unit	Test Condition	Reference Figure
System clock oscillation frequency	f_{OSC}	OSC_1, OSC_2	2.0	—	10.0	MHz		
OSC clock (ϕ_{OSC}) cycle time	t_{OSC}	OSC_1, OSC_2	100	—	500 (1000)	ns		Figure 16.2 *2
System clock (ϕ) cycle time	t_{cyc}		2	—	128	t_{OSC}		
			—	—	128	µs		
Subclock oscillation frequency	f_W	X_1, X_2	—	32.768 or 38.4	—	kHz		
Watch clock (ϕ_W) cycle time	t_W	X_1, X_2	—	30.5 or 26.0	—	µs		Figure 16.2
Subclock (ϕ_{SUB}) cycle time	t_{subcyc}		2	—	8	t_W		*1
Instruction cycle time			2	—	—	t_{cyc} t_{subcyc}		
Oscillation stabilization time	t_{rc}	OSC_1, OSC_2	—	0.8	2.0	ms	Figure 16.10 (crystal oscillator)	Figure 16.10 *3
			—	2.0	6.0	ms	Figure 16.9 (crystal oscillator)	Figure 16.9 *4
			—	20	45	µs	Figure 16.10 (ceramic oscillator)	Figure 16.10 *3
			—	20	45	µs	Figure 16.9 (ceramic oscillator)	Figure 16.9 *4
			—	—	50	ms	Except the above	
		X_1, X_2	—	—	2.0	s		

Item	Symbol	Applicable Pins	Values Min	Values Typ	Values Max	Unit	Test Condition	Reference Figure
External clock high width	t_{CPH}	OSC_1	40	—	—	ns		Figure 16.2
		X_1	—	15.26 or 13.02	—	μs		
External clock low width	t_{CPL}	OSC_1	40	—	—	ns		Figure 16.2
		X_1	—	15.26 or 13.02	—	μs		
External clock rise time	t_{CPr}	OSC_1	—	—	10	ns		Figure 16.2
		X_1	—	—	55.0	ns		
External clock fall time	t_{CPf}	OSC_1	—	—	10	ns		Figure 16.2
		X_1	—	—	55.0	ns		
Pin $\overline{RES}$ low width	t_{REL}	$\overline{RES}$	10	—	—	t_{cyc}		Figure 16.3
Input pin high width	t_{IH}	$\overline{IRQ_0}$, $\overline{IRQ_1}$, $\overline{IRQ_3}$, $\overline{IRQ_4}$, IRQAEC, $\overline{WKP_0}$ to $\overline{WKP_7}$, TMIC, TMIF, TMIG, $\overline{ADTRG}$	2	—	—	t_{cyc} t_{subcyc}		Figure 16.4
		AEVL, AEVH	0.5	—	—	t_{osc}		
Input pin low width	t_{IL}	$\overline{IRQ_0}$, $\overline{IRQ_1}$, $\overline{IRQ_3}$, $\overline{IRQ_4}$, IRQAEC, $\overline{WKP_0}$ to $\overline{WKP_7}$, TMIC, TMIF, TMIG, $\overline{ADTRG}$	2	—	—	t_{cyc} t_{subcyc}		Figure 16.4
		AEVL, AEVH	0.5	—	—	t_{osc}		
UD pin minimum transition width	t_{UDH} t_{UDL}	UD	4	—	—	t_{cyc} t_{subcyc}		Figure 16.7

Notes: 1. Selected with SA1 and SA0 of system control register 2 (SYSCR2).
2. The figure in parentheses applies when an external clock is used.
3. Applies to the HD64F38024R.
4. Applies to the HD64F38024.

Table 16.10 Serial Interface (SCI3) Timing

V_{CC} = 2.7 V to 3.6 V, AV_{CC} = 2.7 V to 3.6 V, V_{SS} = AV_{SS} = 0.0 V

Item		Symbol	Values Min	Typ	Max	Unit	Test Conditions	Reference Figure
Input clock cycle	Asynchronous	t_{scyc}	4	—	—	t_{cyc} or t_{subcyc}		Figure 16.5
	Synchronous		6	—	—			
Input clock pulse width		t_{SCKW}	0.4	—	0.6	t_{scyc}		Figure 16.5
Transmit data delay time (synchronous)		t_{TXD}	—	—	1	t_{cyc} or t_{subcyc}		Figure 16.6
Receive data setup time (synchronous)		t_{RXS}	400.0	—	—	ns		Figure 16.6
Receive data hold time (synchronous)		t_{RXH}	400.0	—	—	ns		Figure 16.6

16.4.4 A/D Converter Characteristics

Table 16.11 shows the A/D converter characteristics of the H8/38024F.

Table 16.11 A/D Converter Characteristics

V_{CC} = 2.7 V to 3.6 V, V_{SS} = AV_{SS} = 0.0 V

Item	Symbol	Applicable Pins	Values Min	Values Typ	Values Max	Unit	Test Condition	Reference Figure
Analog power supply voltage	AV_{CC}	AV_{CC}	2.7	—	3.6	V		*1
Analog input voltage	AV_{IN}	AN_0 to AN_7	– 0.3	—	AV_{CC} + 0.3	V		
Analog power supply current	AI_{OPE}	AV_{CC}	—	—	1.0	mA	AV_{CC} = 3.0 V	
	AI_{STOP1}	AV_{CC}	—	600	—	µA		*2 Reference value
	AI_{STOP2}	AV_{CC}	—	—	5	µA		*3
Analog input capacitance	C_{AIN}	AN_0 to AN_7	—	—	15.0	pF		
Allowable signal source impedance	R_{AIN}		—	—	10.0	kΩ		
Resolution (data length)			—	—	10	bit		
Nonlinearity error			—	—	±3.5	LSB	AV_{CC} = 2.7 V to 3.6 V	
Quantization error			—	—	±0.5	LSB		
Absolute accuracy			—	±2.0	±4.0	LSB	AV_{CC} = 2.7 V to 3.6 V	
Conversion time			12.4	—	124	µs	AV_{CC} = 2.7 V to 3.6 V	

Notes: 1. Set AV_{CC} = V_{CC} when the A/D converter is not used.
2. AI_{STOP1} is the current in active and sleep modes while the A/D converter is idle.
3. AI_{STOP2} is the current at reset and in standby, watch, subactive, and subsleep modes while the A/D converter is idle.

16.4.5 LCD Characteristics

Table 16.12 shows the LCD characteristics.

Table 16.12 LCD Characteristics

V_{CC} = 2.7 V to 3.6 V, AV_{CC} = 2.7 V to 3.6 V, V_{SS} = AV_{SS} = 0.0 V

Item	Symbol	Applicable Pins	Values Min	Values Typ	Values Max	Unit	Test Conditions	Reference Figure
Segment driver drop voltage	V_{DS}	SEG_1 to SEG_{32}	—	—	0.6	V	I_D = 2 µA V_1 = 2.7 V to 3.6 V	*1
Common driver drop voltage	V_{DC}	COM_1 to COM_4	—	—	0.3	V	I_D = 2 µA V_1 = 2.7 V to 3.6 V	*1
LCD power supply split-resistance	R_{LCD}		0.5	3.0	9.0	MΩ	Between V_1 and V_{SS}	*3
			1.5	3.0	7.0			*4
Liquid crystal display voltage	V_{LCD}	V_1	2.2	—	3.6	V		*2

Notes: 1. The voltage drop from power supply pins V_1, V_2, V_3, and VSS to each segment pin or common pin.
2. When the liquid crystal display voltage is supplied from an external power source, ensure that the following relationship is maintained: $V_{CC} \geq V_1 \geq V_2 \geq V_3 \geq V_{SS}$.
3. Applies to the HD64F38024.
4. Applies to the HD64F38024R.

16.4.6 Flash Memory Characteristics

Table 16.13 lists the flash memory characteristics.

Table 16.13 Flash Memory Characteristics

AV_{CC} = 2.7 V to 3.6 V, V_{SS} = AV_{SS} = 0.0 V, V_{CC} = 2.7 V to 3.6 V (operating voltage range in reading), V_{CC} = 3.0 V to 3.6 V (operating voltage range in programming/erasing), T_a = –20 to +75°C (operating temperature range in programming/erasing)

Item		Symbol	Values Min	Typ	Max	Unit	Test Condition
Programming time (per 128 bytes)*1 *2 *4		t_P	—	7	200	ms	
Erase time (per block) *1 *3 *6		t_E	—	100	1200	ms	
Maximum number of reprogrammings		N_{WEC}	1000 *8 *11	10000 *9	—	Times	
			100 *8 *12	10000 *9	—		
Data retention time		t_{DRP}	10*10	—	—	Years	
Programming	Wait time after SWE bit setting*1	x	1	—	—	μs	
	Wait time after PSU bit setting*1	y	50	—	—	μs	
	Wait time after P bit setting*1 *4	z1	28	30	32	μs	1 ≤ n ≤ 6
		z2	198	200	202	μs	7 ≤ n ≤ 1000
		z3	8	10	12	μs	Additional-programming
	Wait time after P bit clear*1	α	5	—	—	μs	
	Wait time after PSU bit clear*1	β	5	—	—	μs	
	Wait time after PV bit setting*1	γ	4	—	—	μs	
	Wait time after dummy write*1	ε	2	—	—	μs	
	Wait time after PV bit clear*1	η	2	—	—	μs	
	Wait time after SWE bit clear*1	θ	100	—	—	μs	
	Maximum programming count*1 *4 *5	N	—	—	1000	Times	
Erase	Wait time after SWE bit setting*1	x	1	—	—	μs	
	Wait time after ESU bit setting*1	y	100	—	—	μs	
	Wait time after E bit setting*1 *6	z	10	—	100	ms	
	Wait time after E bit clear*1	α	10	—	—	μs	
	Wait time after ESU bit clear*1	β	10	—	—	μs	
	Wait time after EV bit setting*1	γ	20	—	—	μs	
	Wait time after dummy write*1	ε	2	—	—	μs	
	Wait time after EV bit clear*1	η	4	—	—	μs	
	Wait time after SWE bit clear*1	θ	100	—	—	μs	
	Maximum erase count*1 *6 *7	N	—	—	120	Times	

Notes: 1. Make the time settings in accordance with the program/erase algorithms.
2. The programming time for 128 bytes. (Indicates the total time for which the P bit in flash memory control register 1 (FLMCR1) is set. The program-verify time is not included.)
3. The time required to erase one block. (Indicates the time for which the E bit in flash memory control register 1 (FLMCR1) is set. The erase-verify time is not included.)
4. Programming time maximum value (t_P(MAX)) = wait time after P bit setting (z) × maximum number of writes (N)
5. Set the maximum number of writes (N) according to the actual set values of z1, z2, and z3, so that it does not exceed the programming time maximum value (t_P(MAX)). The wait time after P bit setting (z1, z2) should be changed as follows according to the value of the number of writes (n).

   Number of writes (n)

   $1 \leq n \leq 6$ z1 = 30 µs

   $7 \leq n \leq 1000$ z2 = 200 µs
6. Erase time maximum value (t_E(max)) = wait time after E bit setting (z) × maximum number of erases (N)
7. Set the maximum number of erases (N) according to the actual set value of (z), so that it does not exceed the erase time maximum value (t_E(max)).
8. The minimum number of times all characteristics are guaranteed following reprogramming. (The guarantee covers the range from 1 to the minimum value.)
9. Reference value at 25°C. (Guideline showing number of reprogrammings over which functioning will be retained under normal circumstances.)
10. Data retention characteristics within the range indicated in the specifications, including the minimum value for reprogrammings.
11. Applies to an operating voltage range when reading data of 3.0 to 3.6 V.
12. Applies to an operating voltage range when reading data of 2.7 to 3.6 V.

16.4.7 Power Supply Characteristics

Table 16.14 Power Supply Characteristics

Unless otherwise indicated, V_{CC} = 2.7 V to 3.6 V, AV_{CC} = 2.7 V to 3.6 V, V_{SS} = AV_{SS} = 0.0 V

Item	Symbol	Applicable Pins	Test Condition	Values Min	Values Typ	Values Max	Unit	Notes
Power supply startup voltage	$V_{CCSTART}$	V_{CC}		0	—	0.1	V	*1*2
Power supply startup slope	SV_{CC}	V_{CC}		0.05	—	—	V/ms	

Notes: 1. This LSI may not start normally when it starts with the condition beyond specification shown in above (Refer to figure 16.1 for power supply voltage startup time.).
2. Applies to the F-ZTAT version.

16.5 H8/38024S Group Mask ROM Version Absolute Maximum Ratings

Table 16.15 lists the absolute maximum ratings.

Table 16.15 Absolute Maximum Ratings

Item		Symbol	Value	Unit	Note
Power supply voltage		V_{CC}	–0.3 to +4.3	V	*1
Analog power supply voltage		AV_{CC}	–0.3 to +4.3	V	
Input voltage	Ports other than Port B	V_{in}	–0.3 to V_{CC} +0.3	V	
	Port B	AV_{in}	–0.3 to AV_{CC} +0.3	V	
Port 9 pin voltage		V_{P9}	–0.3 to V_{CC} +0.3	V	
Operating temperature		T_{opr}	–20 to +75 (regular specifications)	°C	
			–40 to +85 (wide-range specifications)	°C	
			+75 (products shipped as chips)*2		
Storage temperature		T_{stg}	–55 to +125	°C	

Notes: 1. Permanent damage may occur to the chip if maximum ratings are exceeded. Normal operation should be under the conditions specified in Electrical Characteristics. Exceeding these values can result in incorrect operation and reduced reliability.

2. Power may be applied when the temperature is between –20 and +75°C.

16.6 H8/38024S Group Mask ROM Version Electrical Characteristics

16.6.1 Power Supply Voltage and Operating Range

The power supply voltage and operating range are indicated by the shaded region in the figures.

Power Supply Voltage and Oscillator Frequency Range

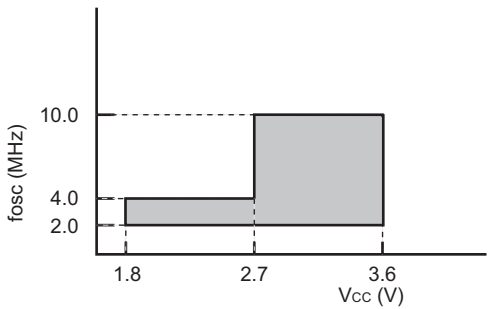

- Active (high-speed) mode
- Sleep (high-speed) mode

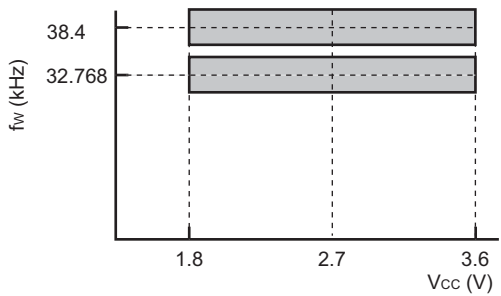

- All operating

Note: The fosc values are those when an oscillator is used; when an external clock is used the minimum value of fosc is 1 MHz.

Power Supply Voltage and Operating Frequency Range

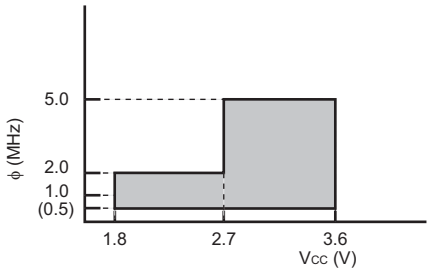

- Active (high-speed) mode
- Sleep (high-speed) mode (except CPU)

Note: 1. The figure in parentheses is the minimum operating frequency when an external clock is input. When using an oscillator, the minimum operating frequency (ϕ) is 1 MHz.

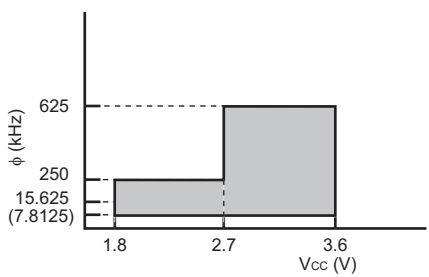

- Active (medium-speed) mode
- Sleep (medium-speed) mode (except A/D converter)

Note: 2. The figure in parentheses is the minimum operating frequency when an external clock is input. When using an oscillator, the minimum operating frequency (ϕ) is 15.625 kHz.

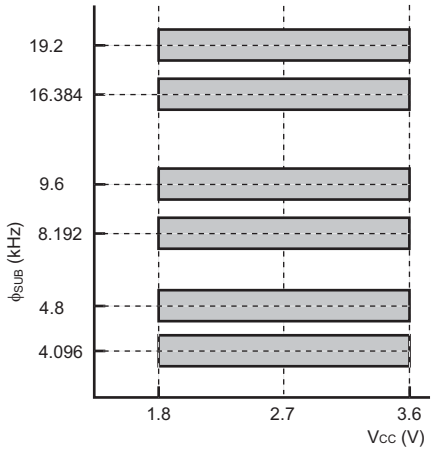

- Subactive mode
- Subsleep mode (except CPU)
- Watch mode (except CPU)

Analog power Supply Voltage and A/D Converter Operating Range

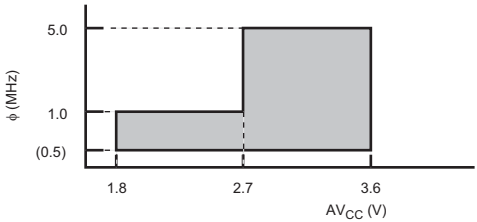

- Active (high-speed) mode
- Sleep (high-speed) mode

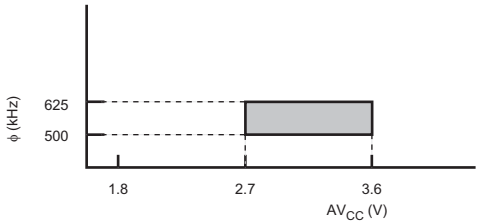

- Active (medium-speed) mode
- Sleep (medium-speed) mode

16.6.2 DC Characteristics

Table 16.16 lists the DC characteristics of the H8/38024S.

Table 16.16 DC Characteristics

V_{CC} = 1.8 V to 3.6 V, AV_{CC} = 1.8 V to 3.6 V, V_{SS} = AV_{SS} = 0.0 V

Item	Symbol	Applicable Pins	Values Min	Values Typ	Values Max	Unit	Test Condition	Notes
Input high voltage	V_{IH}	$\overline{RES}$, $\overline{WKP}_0$ to $\overline{WKP}_7$, $\overline{IRQ}_0$, $\overline{IRQ}_3$, $\overline{IRQ}_4$, AEVL, AEVH, TMIC, TMIF, TMIG, $\overline{ADTRG}$, SCK_{32}	0.9 V_{CC}	—	V_{CC} + 0.3	V		
		$\overline{IRQ}_1$	0.9 V_{CC}	—	AV_{CC} + 0.3	V		
		RXD_{32}, UD	0.8 V_{CC}	—	V_{CC} + 0.3	V		
		OSC_1	0.9 V_{CC}	—	V_{CC} + 0.3	V		
		X_1	0.9 V_{CC}	—	V_{CC} + 0.3	V		
		$P1_3$, $P1_4$, $P1_6$, $P1_7$, $P3_0$ to $P3_7$, $P4_0$ to $P4_3$, $P5_0$ to $P5_7$, $P6_0$ to $P6_7$, $P7_0$ to $P7_7$, $P8_0$ to $P8_7$, PA_0 to PA_3	0.8 V_{CC}	—	V_{CC} + 0.3	V		
		PB_0 to PB_7	0.8 V_{CC}	—	AV_{CC} + 0.3	V		
		IRQAEC	0.9 V_{CC}	—	V_{CC} + 0.3	V		

Item	Symbol	Applicable Pins	Values Min	Values Typ	Values Max	Unit	Test Condition	Notes
Input low voltage	V_{IL}	$\overline{RES}$, $\overline{WKP_0}$ to $\overline{WKP_7}$, $\overline{IRQ_0}$, $\overline{IRQ_1}$, $\overline{IRQ_3}$, $\overline{IRQ_4}$, IRQAEC, AEVL, AEVH, TMIC, TMIF, TMIG, $\overline{ADTRG}$, SCK_{32}	–0.3	—	0.1 V_{CC}	V		
		RXD_{32}, UD	–0.3	—	0.2 V_{CC}	V		
		OSC_1	–0.3	—	0.1 V_{CC}	V		
		X_1	–0.3	—	0.1 V_{CC}	V		
		$P1_3$, $P1_4$, $P1_6$, $P1_7$, $P3_0$ to $P3_7$, $P4_0$ to $P4_3$, $P5_0$ to $P5_7$, $P6_0$ to $P6_7$, $P7_0$ to $P7_7$, $P8_0$ to $P8_7$, PA_0 to PA_3, PB_0 to PB_7	–0.3	—	0.2 V_{CC}	V		
Output high voltage	V_{OH}	$P1_3$, $P1_4$, $P1_6$, $P1_7$, $P3_0$ to $P3_7$, $P4_0$ to $P4_2$, $P5_0$ to $P5_7$, $P6_0$ to $P6_7$, $P7_0$ to $P7_7$, $P8_0$ to $P8_7$, PA_0 to PA_3	V_{CC} – 1.0	—	—	V	$-I_{OH}$ = 1.0 mA V_{CC} = 2.7 V to 3.6 V	
			V_{CC} – 0.3	—	—		$-I_{OH}$ = 0.1 mA	

Item	Symbol	Applicable Pins	Values Min	Typ	Max	Unit	Test Condition	Notes
Output low voltage	V_{OL}	$P1_3$, $P1_4$, $P1_6$, $P1_7$, $P3_0$ to $P3_7$, $P4_0$ to $P4_2$, $P5_0$ to $P5_7$, $P6_0$ to $P6_7$, $P7_0$ to $P7_7$, $P8_0$ to $P8_7$, PA_0 to PA_3	—	—	0.5	V	I_{OL} = 0.4 mA	
		$P9_0$ to $P9_5$	—	—	0.5	V	I_{OL} = 10 mA V_{CC} = 2.2 V to 3.6 V	
			—	—	0.5	V	I_{OL} = 8 mA V_{CC} = 1.8 V to 3.6 V	
Input/output leakage current	$\lvert I_{IL} \rvert$	$\overline{RES}$, $P4_3$, OSC_1, X_1, $P1_3$, $P1_4$, $P1_6$, $P1_7$, $P3_0$ to $P3_7$, $P4_0$ to $P4_2$, $P5_0$ to $P5_7$, $P6_0$ to $P6_7$, $P7_0$ to $P7_7$, $P8_0$ to $P8_7$, IRQAEC, $P9_0$ to $P9_5$, PA_0 to PA_3	—	—	1.0	µA	V_{IN} = 0.5 V to V_{CC} – 0.5 V	
		PB_0 to PB_7	—	—	1.0	µA	V_{IN} = 0.5 V to AV_{CC} – 0.5 V	
Pull-up MOS current	$-I_p$	$P1_3$, $P1_4$, $P1_6$, $P1_7$, $P3_0$ to $P3_7$, $P5_0$ to $P5_7$, $P6_0$ to $P6_7$	30	—	180	µA	V_{CC} = 3 V, V_{IN} = 0 V	
Input capacitance	C_{IN}	All input pins except power supply and IRQAEC	—	—	15.0	pF	f = 1 MHz, V_{IN} =0 V, T_a = 25°C	
		IRQAEC	—	—	30.0	pF		

Item	Symbol	Applicable Pins	Values Min	Values Typ	Values Max	Unit	Test Condition	Notes
Active mode current dissipation	I_{OPE1}	V_{CC}	—	0.2	—	mA	Active (high-speed) mode V_{CC} = 1.8 V, f_{OSC} = 1 MHz	*1 *2 Max. guideline = 1.1 × typ.
			—	0.6	—	mA	Active (high-speed) mode V_{CC} = 3 V, f_{OSC} = 2 MHz	*1 *2 Max. guideline = 1.1 × typ.
			—	1.2	—	mA	Active (high-speed) mode V_{CC} = 3 V, f_{OSC} = 4 MHz	*1 *2 Max. guideline = 1.1 × typ.
			—	3.1	6.0	mA	Active (high-speed) mode V_{CC} = 3 V, f_{OSC} = 10 MHz	*1 *2
	I_{OPE2}	V_{CC}	—	0.03	—	mA	Active (medium-speed) mode V_{CC} = 1.8 V, f_{OSC} = 1 MHz ϕ_{osc}/128	*1 *2 Max. guideline = 1.1 × typ.
			—	0.1	—	mA	Active (medium-speed) mode V_{CC} = 3 V, f_{OSC} = 2 MHz ϕ_{osc}/128	*1 *2 Max. guideline = 1.1 × typ.

Item	Symbol	Applicable Pins	Values Min	Values Typ	Values Max	Unit	Test Condition	Notes
Active mode current dissipation	I_{OPE2}	V_{CC}	—	0.2	—	mA	Active (medium-speed) mode V_{CC} = 3 V, f_{OSC} = 4 MHz ϕ_{osc}/128	*1 *2 Max. guideline = 1.1 × typ.
			—	0.6	1.8	mA	Active (medium-speed) mode V_{CC} = 3 V, f_{OSC} = 10 MHz ϕ_{osc}/128	*1 *2
Sleep mode current dissipation	I_{SLEEP}	V_{CC}	—	0.08	—	mA	V_{CC}= 1.8 V, f_{OSC}= 1 MHz	*1 *2 Max. guideline = 1.1 × typ.
			—	0.3	—	mA	V_{CC}= 3 V, f_{OSC}= 2 MHz	*1 *2 Max. guideline = 1.1 × typ.
			—	0.5	—	mA	V_{CC}= 3 V, f_{OSC}= 4 MHz	*1 *2 Max. guideline = 1.1 × typ.
			—	1.3	4.8	mA	V_{CC}= 3 V, f_{OSC}= 10 MHz	*1 *2

Item	Symbol	Applicable Pins	Values Min	Values Typ	Values Max	Unit	Test Condition	Notes
Subactive mode current dissipation	I_{SUB}	V_{CC}	—	6.2	—	μA	V_{CC} = 1.8 V, LCD on 32 kHz External Clock ($\phi_{SUB}=\phi_w/2$)	*1 *2 Reference value
			—	5.7	—	μA	V_{CC} = 1.8 V, LCD on 32 kHz crystal resonator ($\phi_{SUB}=\phi_w/2$)	
			—	4.4	—	μA	V_{CC} = 2.7 V, LCD on 32 kHz crystal resonator ($\phi_{SUB}=\phi_w/8$)	
			—	10	40	μA	V_{CC} = 2.7 V, LCD on 32 kHz External Clock ($\phi_{SUB}=\phi_w/2$)	*1 *2
			—	11	40	μA	V_{CC} = 2.7 V, LCD on 32 kHz crystal resonator ($\phi_{SUB}=\phi_w/2$)	
Subsleep mode current dissipation	I_{SUBSP}	V_{CC}	—	4.6	16.0	μA	V_{CC} = 2.7 V, LCD on 32 kHz External Clock ($\phi_{SUB}=\phi_w/2$)	*1 *2
			—	5.1	16.0	μA	V_{CC} = 2.7 V, LCD on 32 kHz crystal resonator ($\phi_{SUB}=\phi_w/2$)	
Watch mode current dissipation	I_{WATCH}	V_{CC}	—	1.2	—	μA	V_{CC} = 1.8 V, T_a = 25°C 32 kHz crystal resonator LCD not used	*1 *2 Reference value
			—	2.0	—	μA	V_{CC} = 2.7 V, T_a = 25°C 32 kHz External Clock LCD not used	

Item	Symbol	Applicable Pins	Values Min	Values Typ	Values Max	Unit	Test Condition	Notes
Watch mode current dissipation	I_{WATCH}	V_{CC}	—	2.3	—	μA	V_{CC} = 2.7 V, T_a = 25°C 32 kHz crystal resonator LCD not used	*1 *2 Reference value
			—	2.0	6.0	μA	V_{CC} = 2.7 V, 32 kHz External Clock LCD not used	*1 *2
			—	2.3	6.0	μA	V_{CC} = 2.7 V, 32 kHz crystal resonator LCD not used	
Standby mode current dissipation	I_{STBY}	V_{CC}	—	0.1	—	μA	V_{CC} = 1.8 V, T_a = 25°C 32 kHz crystal resonator not used	*1 *2 Reference value
			—	0.3	—	μA	V_{CC} = 3.0 V, T_a = 25°C 32 kHz crystal resonator not used	*1 *2 Reference value
			—	1.0	5.0	μA	32 kHz crystal resonator not used	*1 *2
RAM data retaining voltage	V_{RAM}	V_{CC}	1.5	—	—	V		
Allowable output low current (per pin)	I_{OL}	Output pins except port 9	—	—	0.5	mA		
		$P9_0$ to $P9_5$	—	—	10.0	mA		
Allowable output low current (total)	ΣI_{OL}	Output pins except port 9	—	—	20.0	mA		
		Port 9	—	—	80.0	mA		
Allowable output high current (per pin)	$-I_{OH}$	All output pins	—	—	0.2	mA		

Item	Symbol	Applicable Pins	Values Min	Values Typ	Values Max	Unit	Test Condition	Notes
Allowable output high current (total)	$\Sigma - I_{OH}$	All output pins	—	—	10.0	mA		

Notes: Connect the TEST pin to V_{SS}.

1. Pin states during current measurement.

Mode	$\overline{RES}$ Pin	Internal State	Other Pins	LCD Power Supply	Oscillator Pins
Active (high-speed) mode (I_{OPE1})	V_{CC}	Operates	V_{CC}	Halted	System clock oscillator: crystal
Active (medium-speed) mode (I_{OPE2})					Subclock oscillator: Pin X_1 = GND
Sleep mode	V_{CC}	Only on-chip timers operate	V_{CC}	Halted	
Subactive mode	V_{CC}	Operates	V_{CC}	Halted	System clock oscillator:
Subsleep mode	V_{CC}	Only on-chip timers operate, CPU stops	V_{CC}	Halted	crystal Subclock oscillator:
Watch mode	V_{CC}	Only time base operates, CPU stops	V_{CC}	Halted	crystal
Standby mode	V_{CC}	CPU and timers both stop	V_{CC}	Halted	System clock oscillator: crystal Subclock oscillator: Pin X_1 = GND

2. Excludes current in pull-up MOS transistors and output buffers.

16.6.3 AC Characteristics

Table 16.17 lists the control signal timing, and tables 16.10 lists the serial interface timing of the H8/38024S.

Table 16.17 Control Signal Timing

V_{CC} = 1.8 V to 3.6 V, AV_{CC} = 1.8 V to 3.6 V, V_{SS} = AV_{SS} = 0.0 V

Item	Symbol	Applicable Pins	Values Min	Values Typ	Values Max	Unit	Test Condition	Reference Figure
System clock oscillation frequency	f_{OSC}	OSC_1, OSC_2	2.0	—	10.0	MHz	V_{CC} = 2.7 V to 3.6 V	
			2.0	—	4.0	MHz	V_{CC} = 1.8 V to 3.6 V	
OSC clock (ϕ_{OSC}) cycle time	t_{OSC}	OSC_1, OSC_2	100	—	500 (1000)	ns	V_{CC} = 2.7 V to 3.6 V	Figure 16.2 *2
			250	—	500 (1000)	ns	V_{CC} = 1.8 V to 3.6 V	
System clock (ϕ) cycle time	t_{cyc}		2	—	128	t_{OSC}		
			—	—	128	µs		
Subclock oscillation frequency	f_W	X_1, X_2	—	32.768 or 38.4	—	kHz		
Watch clock (ϕ_W) cycle time	t_W	X_1, X_2	—	30.5 or 26.0	—	µs		Figure 16.2
Subclock (ϕ_{SUB}) cycle time	t_{subcyc}		2	—	8	t_W		*1
Instruction cycle time			2	—	—	t_{cyc} t_{subcyc}		

Item	Symbol	Applicable Pins	Values Min	Values Typ	Values Max	Unit	Test Condition	Reference Figure
Oscillation stabilization time	t_{rc}	OSC_1, OSC_2	—	20	45	µs	Ceramic oscillator V_{CC} = 2.2 V to 3.6 V	Figure 16.10
			—	80	—	µs	Ceramic oscillator Except the above	
			—	0.8	2	ms	Crystal oscillator V_{CC} = 2.7 V to 3.6 V	
			—	1.2	3	ms	Crystal oscillator V_{CC} = 2.2 V to 3.6 V	
			—	—	50	ms	Except the above	
		X_1, X_2	—	—	2	s	V_{CC} = 2.2 V to 3.6 V	
			—	4	—	s	Except the above	
External clock high width	t_{CPH}	OSC_1	40	—	—	ns	V_{CC} = 2.7 V to 3.6 V	Figure 16.2
			100	—	—	ns	V_{CC} = 1.8 V to 3.6 V	
		X_1	—	15.26 or 13.02	—	µs		
External clock low width	t_{CPL}	OSC_1	40	—	—	ns	V_{CC} = 2.7 V to 3.6 V	Figure 16.2
			100	—	—	ns	V_{CC} = 1.8 V to 3.6 V	
		X_1	—	15.26 or 13.02	—	µs		
External clock rise time	t_{CPr}	OSC_1	—	—	10	ns	V_{CC} = 2.7 V to 3.6 V	Figure 16.2
			—	—	25	ns	V_{CC} = 1.8 V to 3.6 V	
		X_1	—	—	55.0	ns		
External clock fall time	t_{CPf}	OSC_1	—	—	10	ns	V_{CC} = 2.7 V to 3.6 V	Figure 16.2
			—	—	25	ns	V_{CC} = 1.8 V to 3.6 V	
		X_1	—	—	55.0	ns		
Pin $\overline{RES}$ low width	t_{REL}	$\overline{RES}$	10	—	—	t_{cyc}		Figure 16.3

Item	Symbol	Applicable Pins	Values Min	Values Typ	Values Max	Unit	Test Condition	Reference Figure
Input pin high width	t_{IH}	$\overline{IRQ}_0$, $\overline{IRQ}_1$, $\overline{IRQ}_3$, $\overline{IRQ}_4$, IRQAEC, $\overline{WKP}_0$ to $\overline{WKP}_7$, TMIC, TMIF, TMIG, $\overline{ADTRG}$	2	—	—	t_{cyc} t_{subcyc}		Figure 16.4
		AEVL, AEVH	0.5	—	—	t_{osc}		
Input pin low width	t_{IL}	$\overline{IRQ}_0$, $\overline{IRQ}_1$, $\overline{IRQ}_3$, $\overline{IRQ}_4$, IRQAEC, $\overline{WKP}_0$ to $\overline{WKP}_7$, TMIC, TMIF, TMIG, $\overline{ADTRG}$	2	—	—	t_{cyc} t_{subcyc}		Figure 16.4
		AEVL, AEVH	0.5	—	—	t_{osc}		
UD pin minimum transition width	t_{UDH} t_{UDL}	UD	4	—	—	t_{cyc} t_{subcyc}		Figure 16.7

Notes: 1. Selected with SA1 and SA0 of system control register 2 (SYSCR2).
2. The figure in parentheses applies when an external clock is used.

Table 16.18 Serial Interface (SCI3) Timing

V_{CC} = 1.8 V to 3.6 V, AV_{CC} = 1.8 V to 3.6 V, V_{SS} = AV_{SS} = 0.0 V

Item		Symbol	Values Min	Typ	Max	Unit	Test Conditions	Reference Figure
Input clock cycle	Asynchronous	t_{scyc}	4	—	—	t_{cyc} or t_{subcyc}		Figure 16.5
	Synchronous		6	—	—			
Input clock pulse width		t_{SCKW}	0.4	—	0.6	t_{scyc}		Figure 16.5
Transmit data delay time (synchronous)		t_{TXD}	—	—	1	t_{cyc} or t_{subcyc}		Figure 16.6
Receive data setup time (synchronous)		t_{RXS}	400.0	—	—	ns		Figure 16.6
Receive data hold time (synchronous)		t_{RXH}	400.0	—	—	ns		Figure 16.6

16.6.4 A/D Converter Characteristics

Table 16.19 shows the A/D converter characteristics of the H8/38024S.

Table 16.19 A/D Converter Characteristics

V_{CC} = 1.8 V to 3.6 V, V_{SS} = AV_{SS} = 0.0 V

Item	Symbol	Applicable Pins	Values Min	Values Typ	Values Max	Unit	Test Condition	Reference Figure
Analog power supply voltage	AV_{CC}	AV_{CC}	1.8	—	3.6	V		*1
Analog input voltage	AV_{IN}	AN_0 to AN_7	– 0.3	—	AV_{CC} + 0.3	V		
Analog power supply current	AI_{OPE}	AV_{CC}	—	—	1.0	mA	AV_{CC} = 3.0 V	
	AI_{STOP1}	AV_{CC}	—	600	—	μA		*2 Reference value
	AI_{STOP2}	AV_{CC}	—	—	5	μA		*3
Analog input capacitance	C_{AIN}	AN_0 to AN_7	—	—	15.0	pF		
Allowable signal source impedance	R_{AIN}		—	—	10.0	kΩ		
Resolution (data length)			—	—	10	bit		
Nonlinearity error			—	—	±3.5	LSB	AV_{CC} = 2.7 V to 3.6 V V_{CC} = 2.7 V to 3.6 V	
			—	—	±5.5	LSB	AV_{CC} = 2.0 V to 3.6 V V_{CC} = 2.0 V to 3.6 V	
			—	—	±7.5	LSB	Other than above	*4
Quantization error			—	—	±0.5	LSB		
Absolute accuracy			—	—	±4.0	LSB	AV_{CC} = 2.7 V to 3.6 V V_{CC} = 2.7 V to 3.6 V	
			—	—	±6.0	LSB	AV_{CC} = 2.0 V to 3.6 V V_{CC} = 2.0 V to 3.6 V	
			—	—	±8.0	LSB	Other than above	*4
Conversion time			12.4	—	124	μs	AV_{CC} = 2.7 V to 3.6 V V_{CC} = 2.7 V to 3.6 V	
			62	—	124	μs	Other than above	

Notes: 1. Set AV_{CC} = V_{CC} when the A/D converter is not used.
2. AI_{STOP1} is the current in active and sleep modes while the A/D converter is idle.

3. AI_{STOP2} is the current at reset and in standby, watch, subactive, and subsleep modes while the A/D converter is idle.
4. Conversion time: 62 μs.

16.6.5 LCD Characteristics

Table 16.20 shows the LCD characteristics.

Table 16.20 LCD Characteristics

V_{CC} = 1.8 V to 3.6 V, AV_{CC} = 1.8 V to 3.6 V, V_{SS} = AV_{SS} = 0.0 V

Item	Symbol	Applicable Pins	Values Min	Values Typ	Values Max	Unit	Test Conditions	Reference Figure
Segment driver drop voltage	V_{DS}	SEG_1 to SEG_{32}	—	—	0.6	V	I_D = 2 μA V_1 = 2.7 V to 3.6 V	*1
Common driver drop voltage	V_{DC}	COM_1 to COM_4	—	—	0.3	V	I_D = 2 μA V_1 = 2.7 V to 3.6 V	*1
LCD power supply split-resistance	R_{LCD}		1.5	3.0	7.0	MΩ	Between V_1 and V_{SS}	
Liquid crystal display voltage	V_{LCD}	V_1	2.2	—	3.6	V		*2

Notes: 1. The voltage drop from power supply pins V_1, V_2, V_3, and VSS to each segment pin or common pin.
2. When the liquid crystal display voltage is supplied from an external power source, ensure that the following relationship is maintained: $V_{CC} \geq V_1 \geq V_2 \geq V_3 \geq V_{SS}$.

16.7 Absolute Maximum Ratings of H8/38124 Group F-ZTAT Version and Mask ROM Version

Table 16.21 lists the absolute maximum ratings.

Table 16.21 Absolute Maximum Ratings

Item		Symbol	Value	Unit	Note
Power supply voltage		V_{CC}	–0.3 to +7.0	V	*1
		CV_{CC}	–0.3 to +4.3	V	
Analog power supply voltage		AV_{CC}	–0.3 to +7.0	V	
Input voltage	Other than port B	V_{in}	–0.3 to V_{CC} +0.3	V	
	Port B	AV_{in}	–0.3 to AV_{CC} +0.3	V	
Port 9 pin voltage		V_{P9}	–0.3 to V_{CC} +0.3	V	
Operating temperature		T_{opr}	–20 to +75*2 (regular specifications)	°C	
			–40 to +85*2 (wide-range temperature specifications)		
Storage temperature		T_{stg}	–55 to +125	°C	

Notes: 1. Permanent damage may result if maximum ratings are exceeded. Normal operation should be under the conditions specified in Electrical Characteristics. Exceeding these values can result in incorrect operation and reduced reliability.

2. The operating temperature ranges from –20°C to +75°C when programming or erasing the flash memory.

16.8 Electrical Characteristics of H8/38124 Group F-ZTAT Version and Mask ROM Version

16.8.1 Power Supply Voltage and Operating Ranges

Power Supply Voltage and Oscillation Frequency Range (System Clock Oscillator Selected)

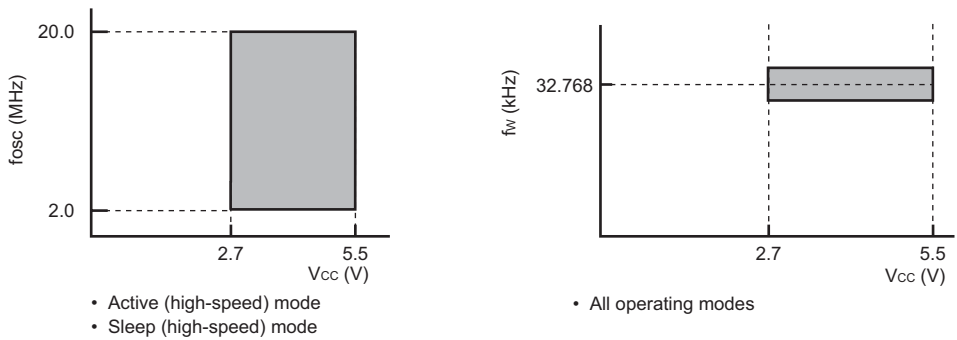

Power Supply Voltage and Oscillation Frequency Range (On-Chip Oscillator Selected)

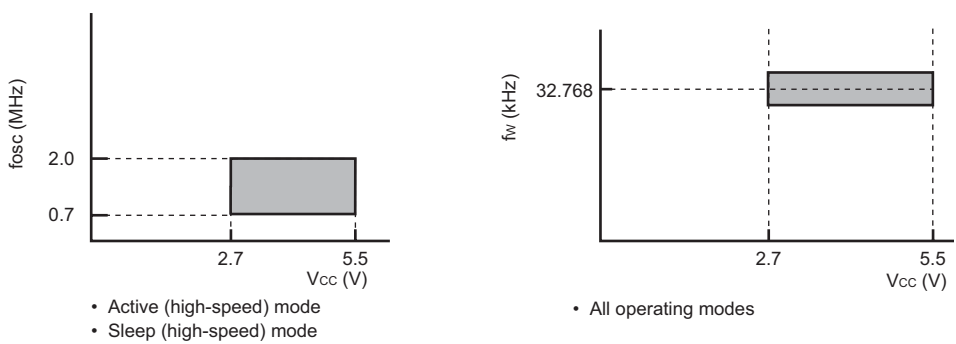

Power Supply Voltage and Operating Frequency Range (System Clock Oscillator Selected)

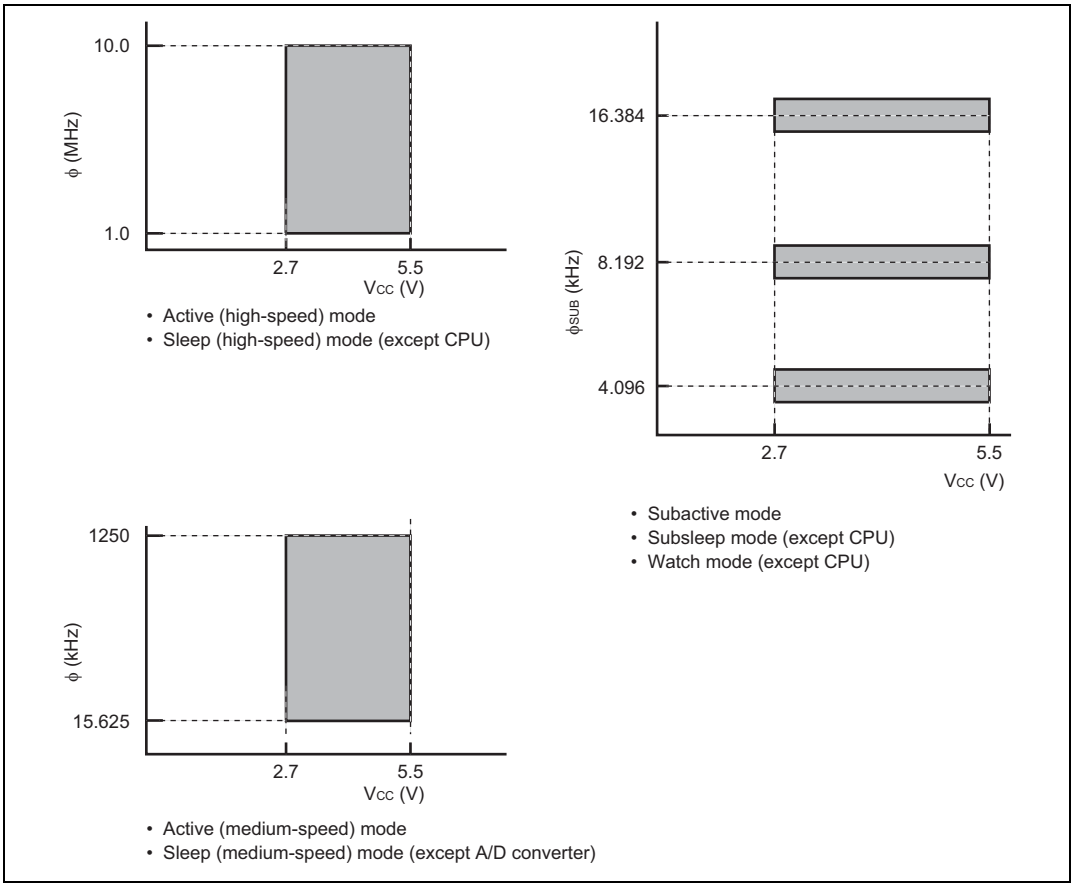

Power Supply Voltage and Operating Frequency Range (On-Chip Oscillator Selected)

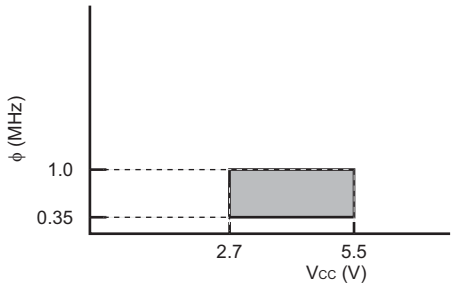

- Active (high-speed) mode
- Sleep (high-speed) mode (except CPU)

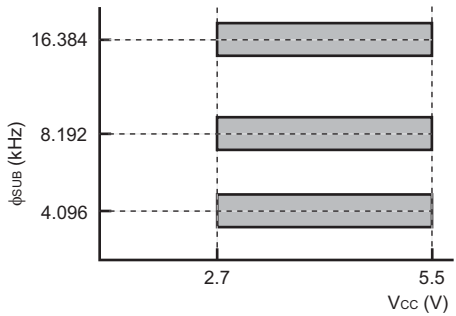

- Subactive mode
- Subsleep mode (except CPU)
- Watch mode (except CPU)

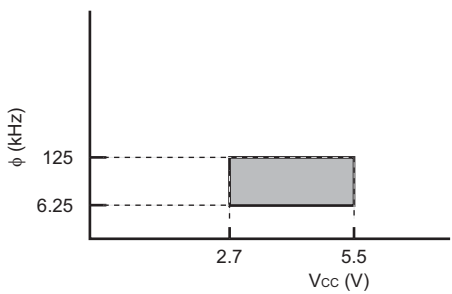

- Active (medium-speed) mode
- Sleep (medium-speed) mode (except A/D converter)

Analog Power Supply Voltage and A/D Converter Operating Range (System Clock Oscillator Selected)

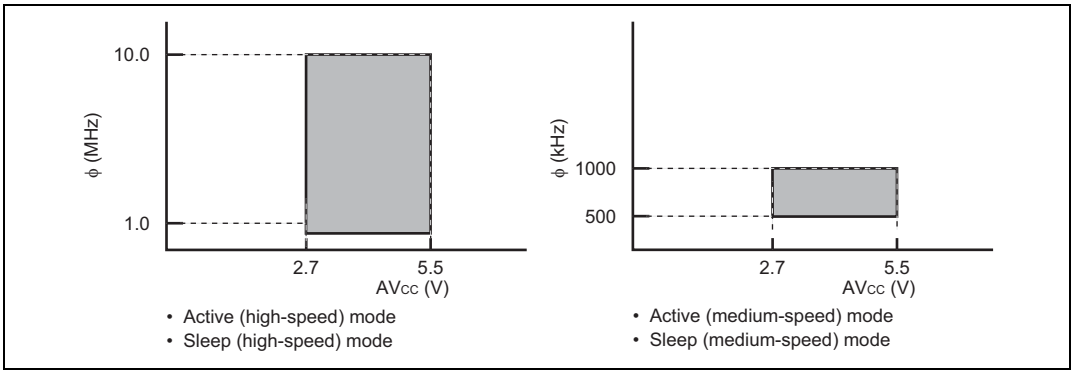

Analog Power Supply Voltage and A/D Converter Operating Range (On-Chip Oscillator Selected)

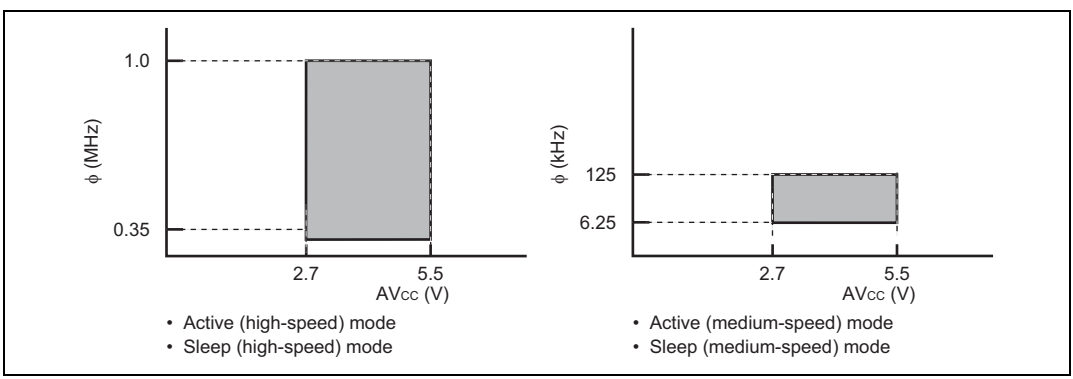

16.8.2 DC Characteristics

Table 16.22 lists the DC characteristics.

Table 16.22 DC Characteristics

V_{CC} = 2.7 V to 5.5 V, AV_{CC} = 2.7 V to 5.5 V, V_{SS} = AV_{SS} = 0.0 V, unless otherwise specified

Item	Symbol	Applicable Pins	Values Min	Values Typ	Values Max	Unit	Test Condition	Notes
Input high voltage	V_{IH}	$\overline{RES}$, $\overline{WKP}_0$ to $\overline{WKP}_7$, $\overline{IRQ}_0$, $\overline{IRQ}_3$, $\overline{IRQ}_4$, AEVL, AEVH, TMIC, TMIF, TMIG, ADTRG, SCK_{32}	$V_{CC} \times 0.8$	—	V_{CC} + 0.3	V	V_{CC} = 4.0 V to 5.5 V	
			$V_{CC} \times 0.9$	—	V_{CC} + 0.3		Other than above	
		$\overline{IRQ}_1$	$V_{CC} \times 0.8$	—	AV_{CC} + 0.3	V	V_{CC} = 4.0 V to 5.5 V	
			$V_{CC} \times 0.9$	—	AV_{CC} + 0.3		Other than above	
		RXD_{32}, UD	$V_{CC} \times 0.7$	—	V_{CC} + 0.3	V	V_{CC} = 4.0 V to 5.5 V	
			$V_{CC} \times 0.8$	—	V_{CC} + 0.3		Other than above	
		OSC_1	$V_{CC} \times 0.8$	—	V_{CC} + 0.3	V	V_{CC} = 4.0 V to 5.5 V	
			$V_{CC} \times 0.9$	—	V_{CC} + 0.3		Other than above	
		$P1_3$, $P1_4$, $P1_7$, $P3_0$ to $P3_7$, $P4_0$ to $P4_3$, $P5_0$ to $P5_7$, $P6_0$ to $P6_7$, $P7_0$ to $P7_7$, $P8_0$ to $P8_7$, PA_0 to PA_3	$V_{CC} \times 0.7$	—	V_{CC} + 0.3	V	V_{CC} = 4.0 V to 5.5 V	
			$V_{CC} \times 0.8$	—	V_{CC} + 0.3		Other than above	
		PB_0 to PB_7	$V_{CC} \times 0.7$	—	AV_{CC} + 0.3	V	V_{CC} = 4.0 V to 5.5 V	
			$V_{CC} \times 0.8$	—	AV_{CC} + 0.3		Other than above	
		IRQAEC, $P9_5$ *5	$V_{CC} \times 0.8$	—	V_{CC} + 0.3	V	V_{CC} = 4.0 V to 5.5 V	
			$V_{CC} \times 0.9$	—	V_{CC} + 0.3		Other than above	

Note: Connect the TEST pin to V_{SS}.

Item	Symbol	Applicable Pins	Values Min	Values Typ	Values Max	Unit	Test Condition	Notes
Input low voltage	V_{IL}	$\overline{RES}$, $\overline{WKP}_0$ to $\overline{WKP}_7$, $\overline{IRQ}_0$, $\overline{IRQ}_1$, $\overline{IRQ}_3$, $\overline{IRQ}_4$, IRQAEC, $P9_5$*5, AEVL, AEVH, TMIC, TMIF, TMIG, ADTRG, SCK_{32}	– 0.3	—	$V_{CC} \times 0.2$	V	V_{CC} = 4.0 V to 5.5 V	
			– 0.3	—	$V_{CC} \times 0.1$		Other than above	
		RXD_{32}, UD	– 0.3	—	$V_{CC} \times 0.3$	V	V_{CC} = 4.0 V to 5.5 V	
			– 0.3	—	$V_{CC} \times 0.2$		Other than above	
		OSC_1	– 0.3	—	$V_{CC} \times 0.2$	V	V_{CC} = 4.0 V to 5.5 V	
			– 0.3	—	$V_{CC} \times 0.1$		Other than above	
		$P1_3$, $P1_4$, $P1_7$, $P3_0$ to $P3_7$, $P4_0$ to $P4_3$, $P5_0$ to $P5_7$, $P6_0$ to $P6_7$, $P7_0$ to $P7_7$, $P8_0$ to $P8_7$, PA_0 to PA_3, PB_0 to PB_7	– 0.3	—	$V_{CC} \times 0.3$	V	V_{CC} = 4.0 V to 5.5 V	
			– 0.3	—	$V_{CC} \times 0.2$		Other than above	
Output high voltage	V_{OH}	$P1_3$, $P1_4$, $P1_7$, $P3_0$ to $P3_7$, $P4_0$ to $P4_2$, $P5_0$ to $P5_7$, $P6_0$ to $P6_7$, $P7_0$ to $P7_7$, $P8_0$ to $P8_7$, PA_0 to PA_3	V_{CC} – 1.0	—	—	V	V_{CC} = 4.0 V to 5.5 V $-I_{OH}$ = 1.0 mA	
			V_{CC} – 0.5	—	—		V_{CC} = 4.0 V to 5.5 V $-I_{OH}$ = 0.5 mA	
			V_{CC} – 0.3	—	—		$-I_{OH}$ = 0.1 mA	

Item	Symbol	Applicable Pins	Values Min	Values Typ	Values Max	Unit	Test Condition	Notes
Output low voltage	V_{OL}	$P1_3$, $P1_4$, $P1_7$, $P4_0$ to $P4_2$, $P5_0$ to $P5_7$, $P6_0$ to $P6_7$, $P7_0$ to $P7_7$, $P8_0$ to $P8_7$, PA_0 to PA_3	—	—	0.6	V	V_{CC} = 4.0 V to 5.5 V I_{OL} = 1.6 mA	
			—	—	0.5		I_{OL} = 0.4 mA	
		$P3_0$ to $P3_7$	—	—	1.0		V_{CC} = 4.0 V to 5.5 V I_{OL} = 10 mA	
			—	—	0.6		V_{CC} = 4.0 V to 5.5 V I_{OL} = 1.6 mA	
			—	—	0.5		I_{OL} = 0.4 mA	
		$P9_0$ to $P9_5$	—	—	1.5		V_{CC} = 4.0 V to 5.5 V I_{OL} = 15 mA	
			—	—	1.0		V_{CC} = 4.0 V to 5.5 V I_{OL} = 10 mA	
			—	—	0.8		V_{CC} = 4.0 V to 5.5 V I_{OL} = 8 mA	
			—	—	1.0		I_{OL} = 5 mA	
			—	—	0.6		I_{OL} = 1.6 mA	
			—	—	0.5		I_{OL} = 0.4 mA	
Input/ output leakage current	$\lvert I_{IL} \rvert$	$\overline{RES}$, $P4_3$, $P1_3$, $P1_4$, $P1_7$, OSC_1, X_1, $P3_0$ to $P3_7$, $P4_0$ to $P4_2$, $P5_0$ to $P5_7$, $P6_0$ to $P6_7$, $P7_0$ to $P7_7$, $P8_0$ to $P8_7$, IRQAEC, PA_0 to PA_3, $P9_0$ to $P9_5$	—	—	1.0	μA	V_{IN} = 0.5 V to V_{CC} – 0.5 V	
		PB_0 to PB_7	—	—	1.0		V_{IN} = 0.5 V to AV_{CC} – 0.5 V	
Pull-up MOS current	$-I_p$	$P1_3$, $P1_4$, $P1_7$, $P3_0$ to $P3_7$, $P5_0$ to $P5_7$, $P6_0$ to $P6_7$	20	—	200	μA	V_{CC} = 5.0 V, V_{IN} = 0.0 V	
			—	40	—		V_{CC} = 2.7 V, V_{IN} = 0.0 V	Reference value

Item	Symbol	Applicable Pins	Values Min	Values Typ	Values Max	Unit	Test Condition	Notes
Input capacitance	C_{in}	All input pins except power supply pin	—	—	15.0	pF	f = 1 MHz, V_{IN} = 0.0 V, T_a = 25°C	
Active mode current consumption	I_{OPE1}	V_{CC}	—	0.6	—	mA	Active (high-speed) mode V_{CC} = 2.7 V, f_{OSC} = 2 MHz	*1 *3 *4 Approx. max. value = 1.1 × Typ.
			—	1.0	—			*2 *3 *4 Approx. max. value = 1.1 × Typ.
			—	0.8	—		Active (high-speed) mode V_{CC} = 5 V, f_{OSC} = 2 MHz	*1 *3 *4 Approx. max. value = 1.1 × Typ.
			—	1.5	—			*2 *3 *4 Approx. max. value = 1.1 × Typ.
			—	1.6	—		Active (high-speed) mode V_{CC} = 5 V, f_{OSC} = 4 MHz	*1 *3 *4 Approx. max. value = 1.1 × Typ.
			—	2.0	—			*2 *3 *4
			—	3.3	7.0		Active (high-speed) mode V_{CC} = 5 V, f_{OSC} = 10 MHz	*1 *3 *4
			—	4.0	7.0			*2 *3 *4

Item	Symbol	Applicable Pins	Values Min	Values Typ	Values Max	Unit	Test Condition	Notes
Active mode current consumption	I_{OPE2}	V_{CC}	—	0.2	—	mA	Active (medium-speed) mode V_{CC} = 2.7 V, f_{OSC} = 2 MHz, ϕ_{OSC}/128	*1 *3 *4 Approx. max. value = 1.1 × Typ.
			—	0.5	—			*2 *3 *4 Approx. max. value = 1.1 × Typ.
			—	0.4	—		Active (medium-speed) mode V_{CC} = 5 V, f_{OSC} = 2 MHz, ϕ_{OSC}/128	*1 *3 *4 Approx. max. value = 1.1 × Typ.
			—	0.8	—			*2 *3 *4 Approx. max. value = 1.1 × Typ.
			—	0.6	—		Active (medium-speed) mode V_{CC} = 5 V, f_{OSC} = 4 MHz, ϕ_{OSC}/128	*1 *3 *4 Approx. max. value = 1.1 × Typ.
			—	0.9	—			*2 *3 *4
			—	0.9	3.0		Active (medium-speed) mode V_{CC} = 5 V, f_{OSC} = 10 MHz, ϕ_{OSC}/128	*1 *3 *4
			—	1.2	3.0			*2 *3 *4

Item	Symbol	Applicable Pins	Values Min	Values Typ	Values Max	Unit	Test Condition	Notes
Sleep mode current consumption	I_{SLEEP}	V_{CC}	—	0.3	—	mA	V_{CC} = 2.7 V, f_{OSC} = 2 MHz	*1 *3 *4 Approx. max. value = 1.1 × Typ.
			—	0.8	—			*2 *3 *4 Approx. max. value = 1.1 × Typ.
			—	0.5	—		V_{CC} = 5 V, f_{OSC} = 2 MHz	*1 *3 *4 Approx. max. value = 1.1 × Typ.
			—	0.9	—			*2 *3 *4 Approx. max. value = 1.1 × Typ.
			—	0.9	—		V_{CC} = 5 V, f_{OSC} = 4 MHz	*1 *3 *4 Approx. max. value = 1.1 × Typ.
			—	1.3	—			*2 *3 *4
			—	1.5	5.0		V_{CC} = 5 V, f_{OSC} = 10 MHz	*1 *3 *4
			—	2.2	5.0			*2 *3 *4
Subactive mode current consumption	I_{SUB}	V_{CC}	—	11.3	—	μA	V_{CC} = 2.7 V, LCD on, 32-kHz crystal resonator used ($\phi_{SUB} = \phi_W/8$)	*1 *3 *4 Reference value
			—	12.7	—			*2 *3 *4 Reference value
			—	16.3	50		V_{CC} = 2.7 V, LCD on, 32-kHz crystal resonator used ($\phi_{SUB} = \phi_W/2$)	*1 *3 *4
			—	30	50			*2 *3 *4

Item	Symbol	Applicable Pins	Values Min	Values Typ	Values Max	Unit	Test Condition	Notes
Subsleep mode current consumption	I_{SUBSP}	V_{CC}	—	4.0	16	μA	V_{CC} = 2.7 V, LCD on, 32-kHz crystal resonator used ($\phi_{SUB} = \phi_W/2$)	*3 *4
Watch mode current consumption	I_{WATCH}	V_{CC}	—	1.4	—	μA	V_{CC} = 2.7 V, T_a = 25°C, 32-kHz crystal resonator used, LCD not used	*1 *3 *4 Reference value
			—	1.8	—			*2 *3 *4 Reference value
			—	1.8	6.0		V_{CC} = 2.7 V, 32-kHz crystal resonator used, LCD not used	*3 *4
Standby mode current consumption	I_{STBY}	V_{CC}	—	0.3	—	μA	V_{CC} = 2.7 V, T_a = 25°C, 32-kHz crystal resonator not used	*1 *3 *4 Reference value
			—	0.5	—		V_{CC} = 2.7 V, T_a = 25°C, 32-kHz crystal resonator not used	*2 *3 *4 Reference value
			—	0.05	—		V_{CC} = 2.7 V, T_a = 25°C, SUBSTP (subclock oscillator control register) setting = 1	*2 *4 Reference value
			—	0.6	—		V_{CC} = 5.0 V, T_a = 25°C, 32-kHz crystal resonator not used	*2 *3 *4 Reference value
			—	0.16	—		V_{CC} = 5.0 V, T_a = 25°C, SUBSTP (subclock oscillator control register) setting = 1	*2 *4 Reference value
			—	1.0	5.0		32-kHz crystal resonator not used	*3 *4
RAM data retaining voltage	V_{RAM}	V_{CC}	2.0	—	—	V		*6

Item	Symbol	Applicable Pins	Values Min	Values Typ	Values Max	Unit	Test Condition	Notes
Allowable output low current (per pin)	I_{OL}	Output pins except ports 3 and 9	—	—	2.0	mA	V_{CC} = 4.0 V to 5.5 V	
		Port 3	—	—	10.0		V_{CC} = 4.0 V to 5.5 V	
		Output pins except port 9	—	—	0.5			
		Port 9	—	—	15.0		V_{CC} = 4.0 V to 5.5 V	
			—	—	5.0		Other than above	
Allowable output low current (total)	ΣI_{OL}	Output pins except ports 3 and 9	—	—	40.0	mA	V_{CC} = 4.0 V to 5.5 V	
		Port 3	—	—	80.0		V_{CC} = 4.0 V to 5.5 V	
		Output pins except port 9	—	—	20.0			
		Port 9	—	—	80.0			
Allowable output high current (per pin)	$-I_{OH}$	All output pins	—	—	2.0	mA	V_{CC} = 4.0 V to 5.5 V	
			—	—	0.2		Other than above	
Allowable output high current (total)	$\Sigma -I_{OH}$	All output pins	—	—	15.0	mA	V_{CC} = 4.0 V to 5.5 V	
			—	—	10.0		Other than above	

Notes: Connect the TEST pin to V_{SS}.

1. Applies to the mask-ROM version.
2. Applies to the F-ZTAT version.

3. Pin states when current consumption is measured

Mode	$\overline{RES}$ Pin	Internal State	Other Pins	LCD Power Supply	Oscillator Pins
Active (high-speed) mode (I_{OPE1}) Active (medium-speed) mode (I_{OPE2})	V_{CC}	Only CPU operates	V_{CC}	Stops	System clock: crystal resonator Subclock: Pin X_1 = GND
Sleep mode	V_{CC}	Only all on-chip timers operate	V_{CC}	Stops	
Subactive mode	V_{CC}	Only CPU operates	V_{CC}	Stops	System clock: crystal resonator Subclock: crystal resonator
Subsleep mode	V_{CC}	Only all on-chip timers operate CPU stops	V_{CC}	Stops	
Watch mode	V_{CC}	Only clock time base operates CPU stops	V_{CC}	Stops	
Standby mode	V_{CC}	CPU and timers both stop	V_{CC}	Stops	System clock: crystal resonator Subclock: Pin X_1 = GND

4. Except current which flows to the pull-up MOS or output buffer
5. Used when user mode or boot mode is determined after canceling a reset in the F-ZTAT version
6. Voltage maintained in standby mode

16.8.3 AC Characteristics

Table 16.23 lists the control signal timing and table 16.24 lists the serial interface timing.

Table 16.23 Control Signal Timing

V_{CC} = 2.7 V to 5.5 V, AV_{CC} = 2.7 V to 5.5 V, V_{SS} = AV_{SS} = 0.0 V, unless otherwise specified

Item	Symbol	Applicable Pins	Values Min	Values Typ	Values Max	Unit	Test Condition	Reference Figure
System clock oscillation frequency	f_{OSC}	OSC_1, OSC_2	2.0	—	20.0	MHz		
			0.7	—	2.0		On-chip oscillator selected	*2
OSC clock (ϕ_{OSC}) cycle time	t_{OSC}	OSC_1, OSC_2	50.0	—	500	ns		Figure 16.2
			500	—	1429		On-chip oscillator selected	
System clock (ϕ) cycle time	t_{cyc}		2	—	128	t_{OSC}		
			—	—	182	μs		
Subclock oscillation frequency	f_W	X_1, X_2	—	32.768	—	kHz		
Watch clock (ϕ_W) cycle time	t_W	X_1, X_2	—	30.5	—	μs		Figure 16.2
Subclock (ϕ_{SUB}) cycle time	t_{subcyc}		2	—	8	t_W		*1
Instruction cycle time			2	—	—	t_{cyc} t_{subcyc}		
Oscillation stabilization time	t_{rc}	OSC_1, OSC_2	—	—	20	ms		
	t_{rc}	X_1, X_2	—	—	2.0	s		
External clock high width	t_{CPH}	OSC_1	20	—	—	ns		Figure 16.2
External clock low width	t_{CPL}	OSC_1	20	—	—	ns		Figure 16.2
External clock rise time	t_{CPr}	OSC_1	—	—	5	ns		Figure 16.2
External clock fall time	t_{CPf}	OSC_1	—	—	5	ns		Figure 16.2
$\overline{RES}$ pin low width	t_{REL}	$\overline{RES}$	10	—	—	t_{cyc}		Figure 16.3

Item	Symbol	Applicable Pins	Values Min	Values Typ	Values Max	Unit	Test Condition	Reference Figure
Input pin high width	t_{IH}	$\overline{IRQ0}$, $\overline{IRQ1}$, $\overline{IRQ3}$, $\overline{IRQ4}$, IRQAEC, $\overline{WKP0}$ to $\overline{WKP7}$, TMIC, TMIF, TMIG, $\overline{ADTRG}$	2	—	—	t_{cyc} t_{subcyc}		Figure 16.4
		AEVL, AEVH	0.5	—	—	t_{OSC}		
Input pin low width	t_{IL}	$\overline{IRQ0}$, $\overline{IRQ1}$, $\overline{IRQ3}$, $\overline{IRQ4}$, IRQAEC, $\overline{WKP0}$ to $\overline{WKP7}$, TMIC, TMIF, TMIG, $\overline{ADTRG}$	2	—	—	t_{cyc} t_{subcyc}		Figure 16.4
		AEVL, AEVH	0.5	—	—	t_{OSC}		
UD pin minimum transition width	t_{UDH} t_{UDL}	UD	4	—	—	t_{cyc} t_{subcyc}		Figure 16.7

Notes: 1. Determined by the SA1 and SA0 bits in the system control register 2 (SYSCR2).

2. These characteristics are given as ranges between minimum and maximum values in order to account for factors such as temperature, power supply voltage, and variation among production lots. When designing systems, make sure to give due consideration to the SPEC range. Please contact a Renesas sales or support representative for actual performance data on the product.

Table 16.24 Serial Interface (SCI3) Timing

V_{CC} = 2.7 V to 5.5 V, AV_{CC} = 2.7 V to 5.5 V, V_{SS} = AV_{SS} = 0.0 V, unless otherwise specified

Item		Symbol	Values Min	Values Typ	Values Max	Unit	Test Condition	Reference Figure
Input clock cycle	Asynchronous	t_{scyc}	4	—	—	t_{cyc} or t_{subcyc}		Figure 16.5
	Clocked synchronous		6	—	—			
Input clock pulse width		t_{SCKW}	0.4	—	0.6	t_{scyc}		Figure 16.5
Transmit data delay time (clocked synchronous)		t_{TXD}	—	—	1	t_{cyc} or t_{subcyc}		Figure 16.6
Receive data setup time (clocked synchronous)		t_{RXS}	150.0	—	—	ns		Figure 16.6
Receive data hold time (clocked synchronous)		t_{RXH}	150.0	—	—	ns		Figure 16.6

16.8.4 A/D Converter Characteristics

Table 16.25 shows the A/D converter characteristics.

Table 16.25 A/D Converter Characteristics

V_{CC} = 2.7 V to 5.5 V, AV_{CC} = 2.7 V to 5.5 V, V_{SS} = AV_{SS} = 0.0 V, unless otherwise specified

Item	Symbol	Applicable Pins	Values Min	Values Typ	Values Max	Unit	Test Condition	Reference Figure
Analog power supply voltage	AV_{CC}	AV_{CC}	2.7	—	5.5	V		*1
Analog input voltage	AV_{IN}	AN_0 to AN_7	– 0.3	—	AV_{CC} + 0.3	V		
Analog power supply current	AI_{OPE}	AV_{CC}	—	—	1.5	mA	AV_{CC} = 5.0 V	
	AI_{STOP1}	AV_{CC}	—	600	—	µA		*2 Reference value
	AI_{STOP2}	AV_{CC}	—	—	5.0	µA		*3
Analog input capacitance	C_{AIN}	AN_0 to AN_7	—	—	15.0	pF		
Allowable signal source impedance	R_{AIN}		—	—	10.0	kΩ		
Resolution (data length)			—	—	10	bit		
Nonlinearity error			—	—	±3.5	LSB	AV_{CC} = 4.0 V to 5.5 V	
			—	—	±7.5		AV_{CC} = 2.7 V to 5.5 V	
Quantization error			—	—	±0.5	LSB		
Absolute accuracy			—	±2.0	±4.0	LSB	AV_{CC} = 4.0 V to 5.5 V	
			—	±2.0	±8.0		AV_{CC} = 2.7 V to 5.5 V	
Conversion time			6.2	—	124	µs		

Notes: 1. Set AV_{CC} = V_{CC} when the A/D converter is not used.
2. AI_{STOP1} is the current in active and sleep modes while the A/D converter is idle.
3. AI_{STOP2} is the current at reset and in standby, watch, subactive, and subsleep modes while the A/D converter is idle.

16.8.5 LCD Characteristics

Table 16.26 shows the LCD characteristics.

Table 16.26 LCD Characteristics

V_{CC} = 2.7 V to 5.5 V, AV_{CC} = 2.7 V to 5.5 V, V_{SS} = AV_{SS} = 0.0 V, unless otherwise specified

Item	Symbol	Applicable Pins	Values			Unit	Test Condition	Reference Figure
			Min	Typ	Max			
Segment driver step-down voltage	V_{DS}	SEG_1 to SEG_{32}	—	—	0.6	V	I_D = 2 μA V1 = 2.7 V to 5.5 V	*1
Common driver step-down voltage	V_{DC}	COM_1 to COM_4	—	—	0.3	V	I_D = 2 μA V1 = 2.7 V to 5.5 V	*1
LCD power supply split-resistance	R_{LCD}		1.5	3.0	7.0	MΩ	Between V1 and V_{SS}	
Liquid crystal display voltage	V_{LCD}	V_1	2.7	—	5.5	V		*2

Notes: 1. The voltage step-down from power supply pins V1, V2, V3, and V_{SS} to each segment pin or common pin.

2. When the liquid crystal display voltage is supplied from an external power supply, ensure that the following relationship is maintained: $V_{CC} \geq V1 \geq V2 \geq V3 \geq V_{SS}$.

16.8.6 Flash Memory Characteristics

Table 16.27 Flash Memory Characteristics

Condition: AV_{CC} = 2.7 V to 5.5 V, V_{SS} = AV_{SS} = 0.0 V, V_{CC} = 2.7 V to 5.5 V (range of operating voltage when reading), V_{CC} = 3.0 V to 5.5 V (range of operating voltage when programming/erasing), T_a = –20°C to +75°C (range of operating temperature when programming/erasing: product with regular specifications, product with wide-range temperature specifications)

Item		Symbol	Values Min	Values Typ	Values Max	Unit	Test Conditions
Programming time*1*2*4		t_P	—	7	200	ms/128 bytes	
Erase time*1*3*5		t_E	—	100	1200	ms/block	
Reprogramming count		N_{WEC}	1000*8	10000*9	—	times	
Data retain period		t_{DRP}	10*10	—	—	year	
Programming	Wait time after SWE-bit setting*1	x	1	—	—	µs	
	Wait time after PSU-bit setting*1	y	50	—	—	µs	
	Wait time after P-bit setting*1*4	z1	28	30	32	µs	1 ≤ n ≤ 6
		z2	198	200	202	µs	7 ≤ n ≤ 1000
		z3	8	10	12	µs	Additional programming
	Wait time after P-bit clear*1	α	5	—	—	µs	
	Wait time after PSU-bit clear*1	β	5	—	—	µs	
	Wait time after PV-bit setting*1	γ	4	—	—	µs	
	Wait time after dummy write*1	ε	2	—	—	µs	
	Wait time after PV-bit clear*1	η	2	—	—	µs	
	Wait time after SWE-bit clear*1	θ	100	—	—	µs	
	Maximum programming count*1*4*5	N	—	—	1000	times	

Item		Symbol	Values Min	Typ	Max	Unit	Test Conditions
Erase	Wait time after SWE-bit setting*1	x	1	—	—	μs	
	Wait time after ESU-bit setting*1	y	100	—	—	μs	
	Wait time after E-bit setting*1*6	z	10	—	100	ms	
	Wait time after E-bit clear*1	α	10	—	—	μs	
	Wait time after ESU-bit clear*1	β	10	—	—	μs	
	Wait time after EV-bit setting*1	γ	20	—	—	μs	
	Wait time after dummy write*1	ε	2	—	—	μs	
	Wait time after EV-bit clear*1	η	4	—	—	μs	
	Wait time after SWE-bit clear*1	θ	100	—	—	μs	
	Maximum erase count*1*6*7	N	—	—	120	times	

Notes:
1. Set the times according to the program/erase algorithms.
2. Programming time per 128 bytes (Shows the total period for which the P bit in FLMCR1 is set. It does not include the programming verification time.)
3. Block erase time (Shows the total period for which the E bit in FLMCR1 is set. It does not include the erase verification time.)
4. Maximum programming time (t_P (max))
   t_P (max) = Wait time after P-bit setting (z) × maximum number of writes (N)
5. The maximum number of writes (N) should be set according to the actual set value of z1, z2, and z3 to allow programming within the maximum programming time (t_P (max)). The wait time after P-bit setting (z1 and z2) should be alternated according to the number of writes (n) as follows:
   $1 \leq n \leq 6$ z1 = 30 μs
   $7 \leq n \leq 1000$ z2 = 200 μs
6. Maximum erase time (t_E (max))
   t_E (max) = Wait time after E-bit setting (z) × maximum erase count (N)
7. The maximum number of erases (N) should be set according to the actual set value of z to allow erasing within the maximum erase time (t_E (max)).
8. This minimum value guarantees all characteristics after reprogramming (the guaranteed range is from 1 to the minimum value).
9. Reference value when the temperature is 25°C (normally reprogramming will be performed by this count).
10. This is a data retain characteristic when reprogramming is performed within the specification range including this minimum value.

16.8.7 Power Supply Voltage Detection Circuit Characteristics

Table 16.28 Power Supply Voltage Detection Circuit Characteristics (1)

V_{CC} = 2.7 V to 5.5 V, AV_{CC} = 2.7 V to 5.5 V, V_{SS} = AV_{SS} = 0.0 V, unless otherwise specified

Item	Symbol	Rated Values Min	Typ	Max	Unit	Test Conditions
LVDR operation drop voltage*	$V_{LVDRmin}$	1.0	—	—	V	
LVD stabilization time	T_{LVDON}	150	—	—	µs	
Standby mode current consumption	I_{STBY}	—	—	100	µA	LVDE = 1 V_{CC} = 5.0 V 32 oscillator not used

Note: * In some cases no reset may occur if the power supply voltage, V_{CC}, drops below VLVDRmin = 1.0 V and then rises, so thorough evaluation is called for.

Table 16. 29 Power Supply Voltage Detection Circuit Characteristics (2)

Using on-chip reference voltage and ladder resistor (VREFSEL = VINTDSEL = VINTUSEL = 0)

Item	Symbol	Rated Values Min	Typ	Max	Unit	Test Conditions
Power supply drop detection voltage	Vint(D)*3	3.3	3.7	4.2	V	LVDSEL = 0
Power supply rise detection voltage	Vint(U)*3	3.6	4.0	4.5	V	LVDSEL = 0
Reset detection voltage 1*1	Vreset1*3	2.0	2.3	2.7	V	LVDSEL = 0
Reset detection voltage 2*2	Vreset2*3	2.7	3.3	3.9	V	LVDSEL = 1

Notes: 1. The above function should be used in conjunction with the voltage drop/rise detection function.
2. Low-voltage detection reset should be selected for low-voltage detection reset only.
3. The values of Vint(D), Vint(U), Vreset1, and Vreset2 change relative to each other.
Example: If Vint(D) is the minimum value, Vint(U), Vreset1, and Vreset2 are also the minimum values.

Table 16.30 Power Supply Voltage Detection Circuit Characteristics (3)

Using on-chip reference voltage and detect voltage external input (VREFSEL = 0, VINTDSEL and VINTUSEL = 1)

Item	Symbol	Rated Values Min	Typ	Max	Unit	Test Condition
extD/extU interrupt detection level	Vexd	0.80	1.20	1.60	V	
extD/extU pin input voltage*2	VextD*1 VextU*1	–0.3	—	V_{CC} + 0.3 or AV_{CC} + 0.3, whichever is lower	V	V_{CC} = 2.7 to 3.3 V
		–0.3	—	3.6 or AV_{CC} + 0.3, whichever is lower	V	V_{CC} = 3.3 to 5.5 V

Notes: 1. The VextD voltage must always be greater than the VextU voltage.
2. The maximum input voltage of the extD and extU pins is 3.6 V.

Table 16.31 Power Supply Voltage Detection Circuit Characteristics (4)

Using external reference voltage and ladder resistor (VREFSEL = 1, VINTDSEL = VINTUSEL = 0)

Item	Symbol	Rated Values Min	Typ	Max	Unit	Test Condition
Power supply drop detection voltage	Vint(D)*1	3.08 * (Vref1 – 0.1)	3.08 * Vref1	3.08 * (Vref1 + 0.1)	V	LVDSEL = 0
Vref input voltage (Vint(D))	Vref1*2	0.98	—	1.68	V	Vint(D)
Power supply rise detection voltage	Vint(U)*1	3.33 * (Vref2 – 0.1)	3.33 * Vref2	3.33 * (Vref2 + 0.1)	V	LVDSEL = 0
Vref input voltage (Vint(U))	Vref2*2	0.91	—	1.55	V	Vint(U)
Reset detection voltage 1	Vreset1*1	1.91 * (Vref3 – 0.1)	1.91 * Vref3	1.91 * (Vref3 + 0.1)	V	LVDSEL = 0
Vref input voltage (Vreset1)	Vref3*2	0.89	—	2.77	V	Vreset1
Reset detection voltage 2	Vreset2*1	2.76 * (Vref4 – 0.1)	2.76 * Vref4	2.76 * (Vref4 + 0.1)	V	LVDSEL = 1
Vref input voltage (Vreset2)	Vref4*2	1.08	—	1.89	V	Vreset2

Notes: 1. The values of Vint(D), Vint(U), Vreset1, and Vreset2 change relative to each other.

Example: If Vint(D) is the minimum value, Vint(U), Vreset1, and Vreset2 are also the minimum values.

2. The Vref input voltage is calculated using the following formula.

2.7 V (= V_{CC} min) < Vint(D), Vint(U), Vreset2 < 5.5 V (= V_{CC} max)
1.5 V (= RAM retention voltage) < Vreset1 < 5.5 V (= V_{CC} max)

Vref1: 2.7 < 3.08 * (Vref1 – 0.1), 3.08 * (Vref1 + 0.1) < 5.5 → 0.98 < Vref1 < 1.68
Vref2: 2.7 < 3.33 * (Vref2 – 0.1), 3.33 * (Vref2 + 0.1) < 5.5 → 0.91 < Vref2 < 1.55
Vref3: 1.5 < 1.91 * (Vref3 – 0.1), 1.91 * (Vref3 + 0.1) < 5.5 → 0.89 < Vref3 < 2.77
Vref4: 2.7 < 2.76 * (Vref4 – 0.1), 2.76 * (Vref4 + 0.1) < 5.5 → 1.08 < Vref4 < 1.89

Table 16. 32 Power Supply Voltage Detection Circuit Characteristics (5)

Using external reference voltage and detect voltage external input (VREFSEL = VINTDSEL = VINTUSEL = 1)

Item	Symbol	Rated Values Min	Typ	Max	Unit	Test Condition
Comparator detection accuracy	Vcdl	0.1	—	—	V	| VextU – Vref | | VextD – Vref |
extD/extU pin input voltage	VextD* VextU*	–0.3	—	V_{CC} + 0.3 or AV_{CC} + 0.3, whichever is lower	V	V_{CC} = 2.7 to 3.3 V
		–0.3	—	3.6 or AV_{CC} + 0.3, whichever is lower	V	V_{CC} = 3.3 to 5.5 V
Vref pin input voltage	Vref5	0.8	—	2.8	V	V_{CC} = 2.7 to 5.5 V

Note: * The VextD voltage must always be greater than the VextU voltage.

16.8.8 Power-On Reset Circuit Characteristics

Table 16.33 Power-On Reset Circuit Characteristics

V_{CC} = 2.7 V to 5.5 V, AV_{CC} = 2.7 V to 5.5 V, V_{SS} = AV_{SS} = 0.0 V, unless otherwise specified

Item	Symbol	Rated Values Min	Typ	Max	Unit	Test Condition
RES pin pull-up resistance	R_{RES}	65	100	—	kΩ	
Power-on reset start voltage	V_{por}	—	—	100	mV	

Note: Make sure to drop the power supply voltage, V_{CC}, to below Vpor = 100 mV and then raise it after the RES pin load had thoroughly dissipated. To drain the load of the RES pin, attaching a diode to the V_{CC} side is recommended. The power-on reset function may not work properly if the power supply voltage, V_{CC}, is raised from a level exceeding 100 mV.

16.8.9 Watchdog Timer Characteristics

Table 16.34 Watchdog Timer Characteristics

AV_{CC} = 2.7 V to 5.5 V, V_{SS} = AV_{SS} = 0.0 V, unless otherwise specified

Item	Symbol	Applicable Pins	Rated Values Min	Typ	Max	Unit	Note	Test Condition
On-chip oscillator overflow time	t_{OVF}		0.2	0.4	—	s	*	V_{CC} = 5 V

Note: * When the on-chip oscillator is selected, the timer counts from 0 to 255, indicating the time remaining until an internal reset is generated.

16.8.10 Power Supply Characteristics

Table 16.35 Power Supply Characteristics

Unless otherwise indicated, V_{CC} = 2.7 V to 5.5 V, AV_{CC} = 2.7 V to 5.5 V, V_{SS} = AV_{SS} = 0.0 V

Item	Symbol	Applicable Pins	Test Condition	Values Min	Typ	Max	Unit	Notes
Power supply startup voltage	$V_{CCSTART}$	V_{CC}		0	—	0.1	V	*1*2
Power supply startup slope	SV_{CC}	V_{CC}		0.05	—	—	V/ms	

Notes: 1. This LSI may not start normally when it starts with the condition beyond specification shown in above (Refer to figure 16.1 for power supply voltage startup time.).
2. Applies to the F-ZTAT version.

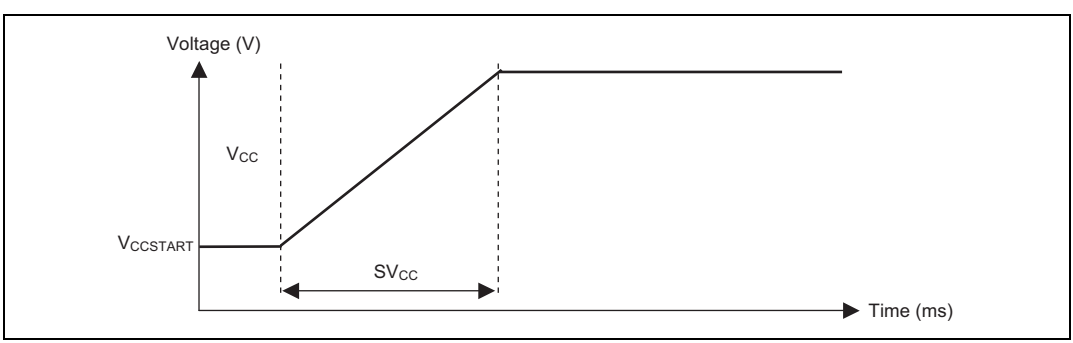

Figure 16.1 Power Supply Voltage Startup Timing

16.9 Operation Timing

Figures 16.2 to 16.7 show timing diagrams.

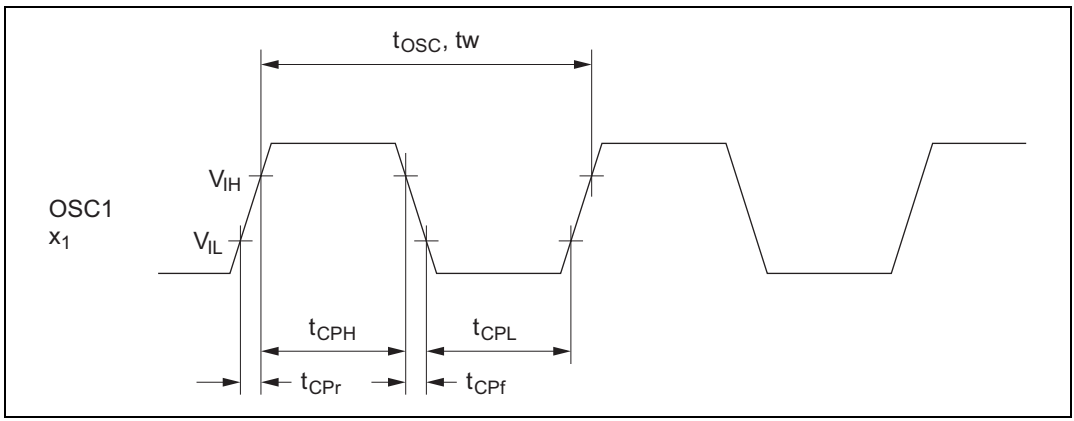

Figure 16.2 Clock Input Timing

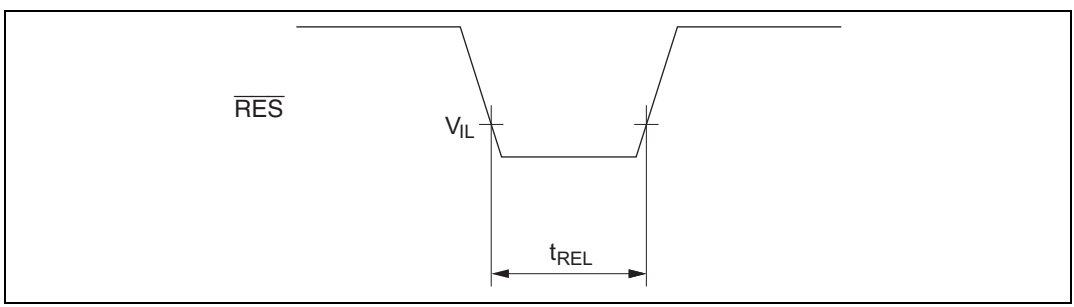

Figure 16.3 $\overline{\text{RES}}$ Low Width

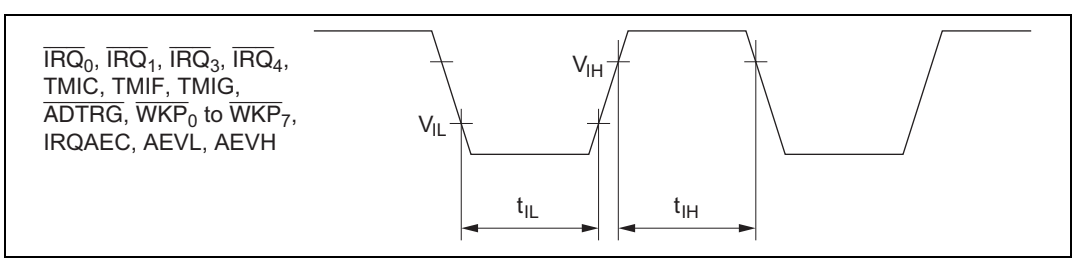

Figure 16.4 Input Timing

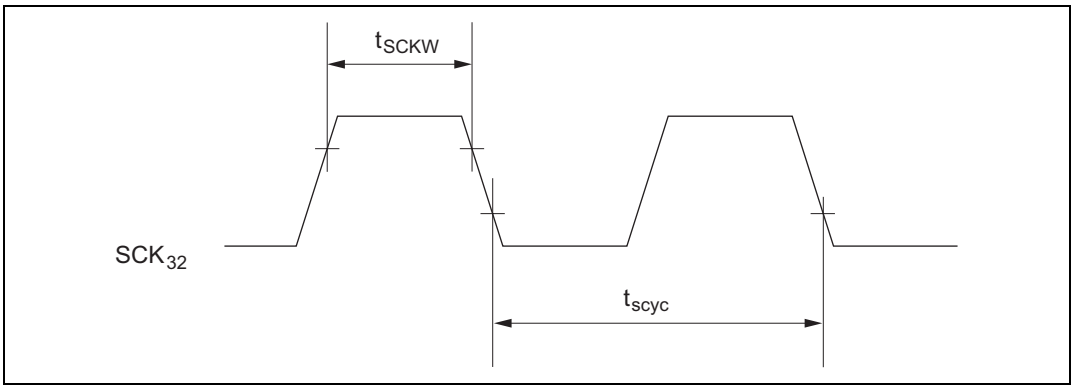

Figure 16.5 SCK3 Input Clock Timing

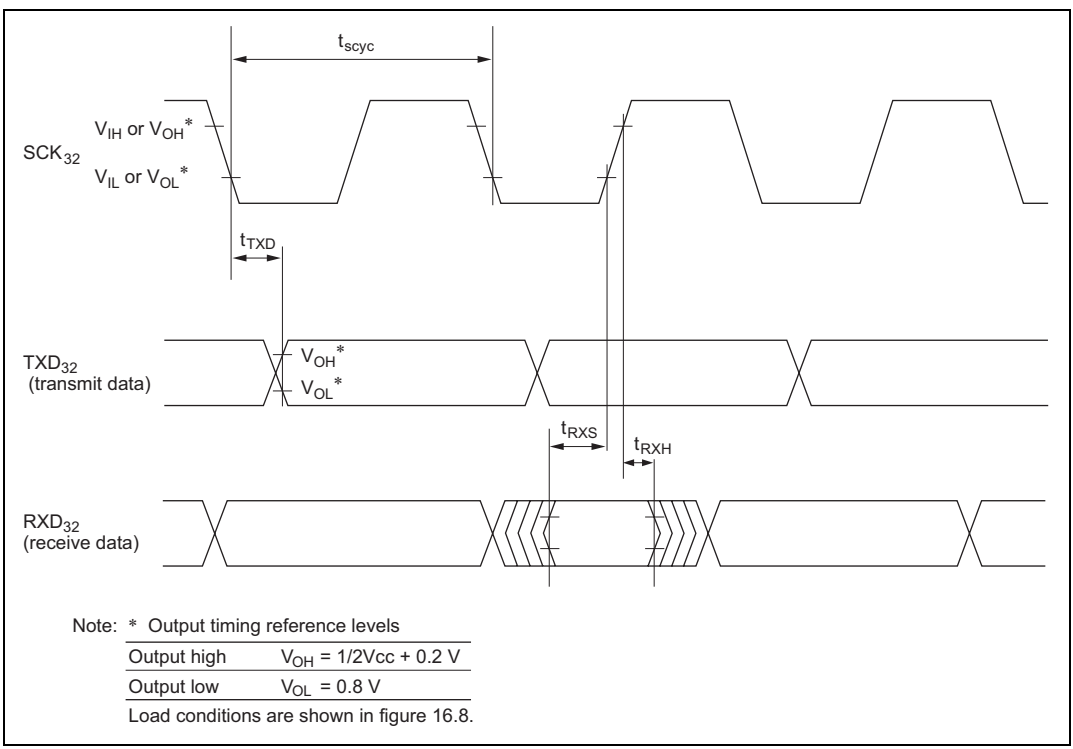

Note: * Output timing reference levels

Output high	V_{OH} = 1/2Vcc + 0.2 V
Output low	V_{OL} = 0.8 V

Load conditions are shown in figure 16.8.

Figure 16.6 SCI3 Synchronous Mode Input/Output Timing

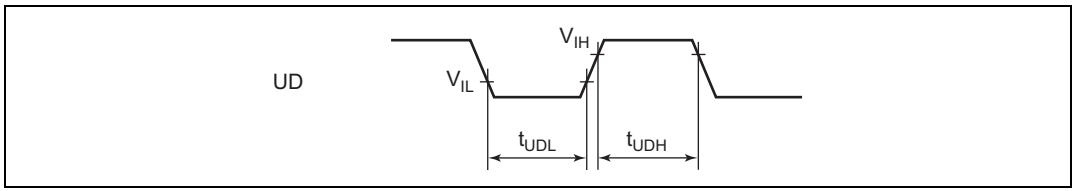

Figure 16.7 UD Pin Minimum Transition Width Timing

16.10 Output Load Circuit

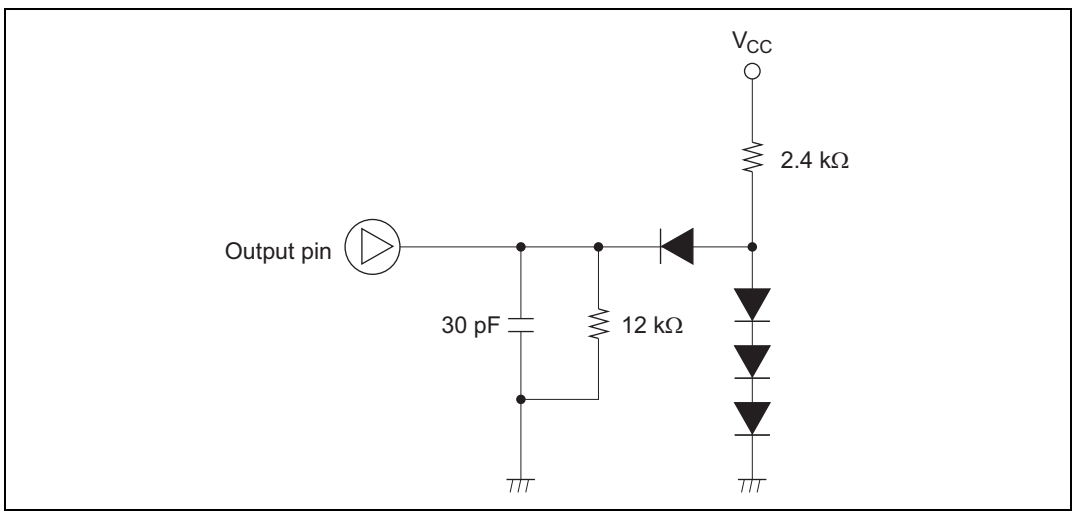

Figure 16.8 Output Load Condition

16.11 Resonator Equivalent Circuit

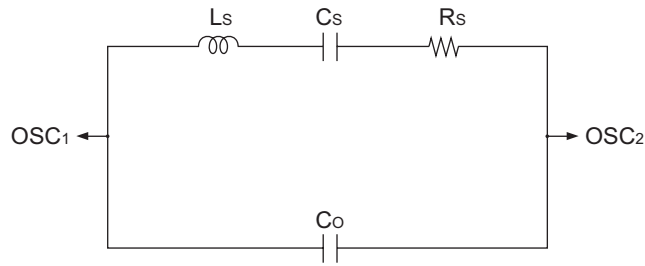

Crystal Resonator Parameters

Frequency (MHz)	4	4.193	10
R_S (max)	100 Ω	100 Ω	30 Ω
C_O (max)	16 pF	16 pF	16 pF

Ceramic Resonator Parameters

Frequency (MHz)	2	4	10
R_S (max)	18.3 Ω	6.8 Ω	4.6 Ω
C_O (max)	36.94 pF	36.72 pF	32.31 pF

Figure 16.9 Resonator Equivalent Circuit (1)

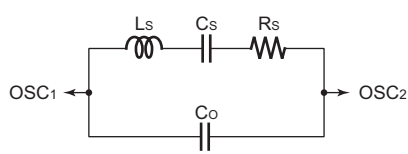

Crystal Resonator Parameters
(Manufacturer's Publicly Released Values)

Frequency (MHz)	4	Manufacturer
R_S (max)	100 Ω	Nihon Dempa Kogyo Co., Ltd.
C_O (max)	16 pF	

Ceramic Resonator Parameters (1)
(Manufacturer's Publicly Released Values)

Frequency (MHz)	2	Manufacturer
R_S (max)	18.3 Ω	Murata Manufacturing Co., Ltd.
C_O (max)	36.94 pF	

Ceramic Resonator Parameters (2)
(Manufacturer's Publicly Released Values)

Frequency (MHz)	10	Manufacturer
R_S (max)	4.6 Ω	Murata Manufacturing Co., Ltd.
C_O (max)	32.31 pF	

Figure 16.10 Resonator Equivalent Circuit (2)

16.12 Usage Note

The ZTAT, F-ZTAT, and mask ROM versions satisfy the electrical characteristics shown in this manual, but actual electrical characteristic values, operating margins, noise margins, and other properties may vary due to differences in manufacturing process, on-chip ROM, layout patterns, and so on.

When system evaluation testing is carried out using the ZTAT or F-ZTAT version, the same evaluation testing should also be conducted for the mask ROM version when changing over to that version.

Appendix A CPU Instruction Set

A.1 Instructions

Operation Notation

Rd8/16	General register (destination) (8 or 16 bits)
Rs8/16	General register (source) (8 or 16 bits)
Rn8/16	General register (8 or 16 bits)
CCR	Condition code register
N	N (negative) flag in CCR
Z	Z (zero) flag in CCR
V	V (overflow) flag in CCR
C	C (carry) flag in CCR
PC	Program counter
SP	Stack pointer
#xx: 3/8/16	Immediate data (3, 8, or 16 bits)
d: 8/16	Displacement (8 or 16 bits)
@aa: 8/16	Absolute address (8 or 16 bits)
+	Addition
–	Subtraction
×	Multiplication
÷	Division
∧	Logical AND
∨	Logical OR
⊕	Exclusive logical OR
→	Move
—	Logical complement

Condition Code Notation

Symbol	
↕	Modified according to the instruction result
*	Not fixed (value not guaranteed)
0	Always cleared to 0
—	Not affected by the instruction execution result

Table A.1 lists the H8/300L CPU instruction set.

Table A.1 Instruction Set

Mnemonic	Operand Size	Operation	Addressing Mode/ Instruction Length (bytes)									Condition Code						No. of States
			#xx: 8/16	Rn	@Rn	@(d:16, Rn)	@–Rn/@Rn+	@aa: 8/16	@(d:8, PC)	@@aa	Implied	I	H	N	Z	V	C	
MOV.B #xx:8, Rd	B	#xx:8 → Rd8	2									—	—	↕	↕	0	—	2
MOV.B Rs, Rd	B	Rs8 → Rd8		2								—	—	↕	↕	0	—	2
MOV.B @Rs, Rd	B	@Rs16 → Rd8			2							—	—	↕	↕	0	—	4
MOV.B @(d:16, Rs), Rd	B	@(d:16, Rs16)→ Rd8				4						—	—	↕	↕	0	—	6
MOV.B @Rs+, Rd	B	@Rs16 → Rd8 Rs16+1 → Rs16					2					—	—	↕	↕	0	—	6
MOV.B @aa:8, Rd	B	@aa:8 → Rd8						2				—	—	↕	↕	0	—	4
MOV.B @aa:16, Rd	B	@aa:16 → Rd8						4				—	—	↕	↕	0	—	6
MOV.B Rs, @Rd	B	Rs8 → @Rd16			2							—	—	↕	↕	0	—	4
MOV.B Rs, @(d:16, Rd)	B	Rs8 → @(d:16, Rd16)				4						—	—	↕	↕	0	—	6
MOV.B Rs, @–Rd	B	Rd16–1 → Rd16 Rs8 → @Rd16					2					—	—	↕	↕	0	—	6
MOV.B Rs, @aa:8	B	Rs8 → @aa:8						2				—	—	↕	↕	0	—	4
MOV.B Rs, @aa:16	B	Rs8 → @aa:16						4				—	—	↕	↕	0	—	6
MOV.W #xx:16, Rd	W	#xx:16 → Rd	4									—	—	↕	↕	0	—	4
MOV.W Rs, Rd	W	Rs16 → Rd16		2								—	—	↕	↕	0	—	2
MOV.W @Rs, Rd	W	@Rs16 → Rd16			2							—	—	↕	↕	0	—	4
MOV.W @(d:16, Rs), Rd	W	@(d:16, Rs16) → Rd16				4						—	—	↕	↕	0	—	6
MOV.W @Rs+, Rd	W	@Rs16 → Rd16 Rs16+2 → Rs16					2					—	—	↕	↕	0	—	6
MOV.W @aa:16, Rd	W	@aa:16 → Rd16						4				—	—	↕	↕	0	—	6
MOV.W Rs, @Rd	W	Rs16 → @Rd16			2							—	—	↕	↕	0	—	4
MOV.W Rs, @(d:16, Rd)	W	Rs16 → @(d:16, Rd16)				4						—	—	↕	↕	0	—	6
MOV.W Rs, @–Rd	W	Rd16–2 → Rd16 Rs16 → @Rd16					2					—	—	↕	↕	0	—	6
MOV.W Rs, @aa:16	W	Rs16 → @aa:16						4				—	—	↕	↕	0	—	6
POP Rd	W	@SP → Rd16 SP+2 → SP					2					—	—	↕	↕	0	—	6
PUSH Rs	W	SP–2 → SP Rs16 → @SP					2					—	—	↕	↕	0	—	6

Mnemonic	Operand Size	Operation	Addressing Mode/ Instruction Length (bytes)									Condition Code						No. of States
			#xx: 8/16	Rn	@Rn	@(d:16, Rn)	@–Rn/@Rn+	@aa: 8/16	@(d:8, PC)	@@aa	Implied	I	H	N	Z	V	C	
ADD.B #xx:8, Rd	B	Rd8+#xx:8 → Rd8	2									—	↕	↕	↕	↕	↕	2
ADD.B Rs, Rd	B	Rd8+Rs8 → Rd8		2								—	↕	↕	↕	↕	↕	2
ADD.W Rs, Rd	W	Rd16+Rs16 → Rd16		2								—	(1)	↕	↕	↕	↕	2
ADDX.B #xx:8, Rd	B	Rd8+#xx:8 +C → Rd8	2									—	↕	↕	(2)	↕	↕	2
ADDX.B Rs, Rd	B	Rd8+Rs8 +C → Rd8		2								—	↕	↕	(2)	↕	↕	2
ADDS.W #1, Rd	W	Rd16+1 → Rd16		2								—	—	—	—	—	—	2
ADDS.W #2, Rd	W	Rd16+2 → Rd16		2								—	—	—	—	—	—	2
INC.B Rd	B	Rd8+1 → Rd8		2								—	—	↕	↕	↕	—	2
DAA.B Rd	B	Rd8 decimal adjust → Rd8		2								—	*	↕	↕	*	(3)	2
SUB.B Rs, Rd	B	Rd8–Rs8 → Rd8		2								—	↕	↕	↕	↕	↕	2
SUB.W Rs, Rd	W	Rd16–Rs16 → Rd16		2								—	(1)	↕	↕	↕	↕	2
SUBX.B #xx:8, Rd	B	Rd8–#xx:8 –C → Rd8	2									—	↕	↕	(2)	↕	↕	2
SUBX.B Rs, Rd	B	Rd8–Rs8 –C → Rd8		2								—	↕	↕	(2)	↕	↕	2
SUBS.W #1, Rd	W	Rd16–1 → Rd16		2								—	—	—	—	—	—	2
SUBS.W #2, Rd	W	Rd16–2 → Rd16		2								—	—	—	—	—	—	2
DEC.B Rd	B	Rd8–1 → Rd8		2								—	—	↕	↕	↕	—	2
DAS.B Rd	B	Rd8 decimal adjust → Rd8		2								—	*	↕	↕	*	—	2
NEG.B Rd	B	0–Rd → Rd		2								—	↕	↕	↕	↕	↕	2
CMP.B #xx:8, Rd	B	Rd8–#xx:8	2									—	↕	↕	↕	↕	↕	2
CMP.B Rs, Rd	B	Rd8–Rs8		2								—	↕	↕	↕	↕	↕	2
CMP.W Rs, Rd	W	Rd16–Rs16		2								—	(1)	↕	↕	↕	↕	2

Mnemonic	Operand Size	Operation	Addressing Mode/ Instruction Length (bytes)									Condition Code						No. of States
			#xx: 8/16	Rn	@Rn	@(d:16, Rn)	@–Rn/@Rn+	@aa: 8/16	@(d:8, PC)	@@aa	Implied	I	H	N	Z	V	C	
MULXU.B Rs, Rd	B	Rd8 × Rs8 → Rd16		2								—	—	—	—	—	—	14
DIVXU.B Rs, Rd	B	Rd16÷Rs8 → Rd16 (RdH: remainder, RdL: quotient)		2								—	—	(5)	(6)	—	—	14
AND.B #xx:8, Rd	B	Rd8∧#xx:8 → Rd8	2									—	—	↕	↕	0	—	2
AND.B Rs, Rd	B	Rd8∧Rs8 → Rd8		2								—	—	↕	↕	0	—	2
OR.B #xx:8, Rd	B	Rd8∨#xx:8 → Rd8	2									—	—	↕	↕	0	—	2
OR.B Rs, Rd	B	Rd8∨Rs8 → Rd8		2								—	—	↕	↕	0	—	2
XOR.B #xx:8, Rd	B	Rd8⊕#xx:8 → Rd8	2									—	—	↕	↕	0	—	2
XOR.B Rs, Rd	B	Rd8⊕Rs8 → Rd8		2								—	—	↕	↕	0	—	2
NOT.B Rd	B	$\overline{\text{Rd}}$ → Rd		2								—	—	↕	↕	0	—	2
SHAL.B Rd	B	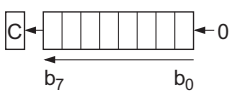		2								—	—	↕	↕	↕	↕	2
SHAR.B Rd	B	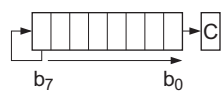		2								—	—	↕	↕	0	↕	2
SHLL.B Rd	B	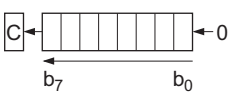		2								—	—	↕	↕	0	↕	2
SHLR.B Rd	B	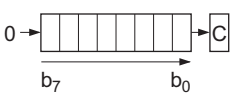		2								—	—	0	↕	0	↕	2
ROTXL.B Rd	B	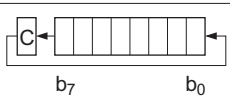		2								—	—	↕	↕	0	↕	2
ROTXR.B Rd	B	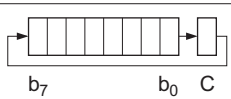		2								—	—	↕	↕	0	↕	2

Mnemonic	Operand Size	Operation	Addressing Mode/ Instruction Length (bytes)									Condition Code						No. of States
			#xx: 8/16	Rn	@Rn	@(d:16, Rn)	@–Rn/@Rn+	@aa: 8/16	@(d:8, PC)	@@aa	Implied	I	H	N	Z	V	C	
ROTL.B Rd	B	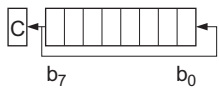		2								—	—	↕	↕	0	↕	2
ROTR.B Rd	B	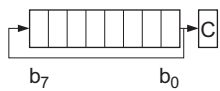		2								—	—	↕	↕	0	↕	2
BSET #xx:3, Rd	B	(#xx:3 of Rd8) ← 1		2								—	—	—	—	—	—	2
BSET #xx:3, @Rd	B	(#xx:3 of @Rd16) ← 1			4							—	—	—	—	—	—	8
BSET #xx:3, @aa:8	B	(#xx:3 of @aa:8) ← 1						4				—	—	—	—	—	—	8
BSET Rn, Rd	B	(Rn8 of Rd8) ← 1		2								—	—	—	—	—	—	2
BSET Rn, @Rd	B	(Rn8 of @Rd16) ← 1			4							—	—	—	—	—	—	8
BSET Rn, @aa:8	B	(Rn8 of @aa:8) ← 1						4				—	—	—	—	—	—	8
BCLR #xx:3, Rd	B	(#xx:3 of Rd8) ← 0		2								—	—	—	—	—	—	2
BCLR #xx:3, @Rd	B	(#xx:3 of @Rd16) ← 0			4							—	—	—	—	—	—	8
BCLR #xx:3, @aa:8	B	(#xx:3 of @aa:8) ← 0						4				—	—	—	—	—	—	8
BCLR Rn, Rd	B	(Rn8 of Rd8) ← 0		2								—	—	—	—	—	—	2
BCLR Rn, @Rd	B	(Rn8 of @Rd16) ← 0			4							—	—	—	—	—	—	8
BCLR Rn, @aa:8	B	(Rn8 of @aa:8) ← 0						4				—	—	—	—	—	—	8
BNOT #xx:3, Rd	B	(#xx:3 of Rd8) ← $(\overline{\text{\#xx:3 of Rd8}})$		2								—	—	—	—	—	—	2
BNOT #xx:3, @Rd	B	(#xx:3 of @Rd16) ← $(\overline{\text{\#xx:3 of @Rd16}})$			4							—	—	—	—	—	—	8
BNOT #xx:3, @aa:8	B	(#xx:3 of @aa:8) ← $(\overline{\text{\#xx:3 of @aa:8}})$						4				—	—	—	—	—	—	8
BNOT Rn, Rd	B	(Rn8 of Rd8) ← $(\overline{\text{Rn8 of Rd8}})$		2								—	—	—	—	—	—	2
BNOT Rn, @Rd	B	(Rn8 of @Rd16) ← $(\overline{\text{Rn8 of @Rd16}})$			4							—	—	—	—	—	—	8
BNOT Rn, @aa:8	B	(Rn8 of @aa:8) ← $(\overline{\text{Rn8 of @aa:8}})$						4				—	—	—	—	—	—	8

Mnemonic	Operand Size	Operation	Addressing Mode/ Instruction Length (bytes)									Condition Code						No. of States
			#xx: 8/16	Rn	@Rn	@(d:16, Rn)	@–Rn/@Rn+	@aa: 8/16	@(d:8, PC)	@@aa	Implied	I	H	N	Z	V	C	
BTST #xx:3, Rd	B	$(\overline{\#xx:3 \text{ of } Rd8}) \rightarrow Z$		2								—	—	—	↕	—	—	2
BTST #xx:3, @Rd	B	$(\overline{\#xx:3 \text{ of } @Rd16}) \rightarrow Z$			4							—	—	—	↕	—	—	6
BTST #xx:3, @aa:8	B	$(\overline{\#xx:3 \text{ of } @aa:8}) \rightarrow Z$						4				—	—	—	↕	—	—	6
BTST Rn, Rd	B	$(\overline{Rn8 \text{ of } Rd8}) \rightarrow Z$		2								—	—	—	↕	—	—	2
BTST Rn, @Rd	B	$(\overline{Rn8 \text{ of } @Rd16}) \rightarrow Z$			4							—	—	—	↕	—	—	6
BTST Rn, @aa:8	B	$(\overline{Rn8 \text{ of } @aa:8}) \rightarrow Z$						4				—	—	—	↕	—	—	6
BLD #xx:3, Rd	B	(#xx:3 of Rd8) → C		2								—	—	—	—	—	↕	2
BLD #xx:3, @Rd	B	(#xx:3 of @Rd16) → C			4							—	—	—	—	—	↕	6
BLD #xx:3, @aa:8	B	(#xx:3 of @aa:8) → C						4				—	—	—	—	—	↕	6
BILD #xx:3, Rd	B	$(\overline{\#xx:3 \text{ of } Rd8}) \rightarrow C$		2								—	—	—	—	—	↕	2
BILD #xx:3, @Rd	B	$(\overline{\#xx:3 \text{ of } @Rd16}) \rightarrow C$			4							—	—	—	—	—	↕	6
BILD #xx:3, @aa:8	B	$(\overline{\#xx:3 \text{ of } @aa:8}) \rightarrow C$						4				—	—	—	—	—	↕	6
BST #xx:3, Rd	B	C → (#xx:3 of Rd8)		2								—	—	—	—	—	—	2
BST #xx:3, @Rd	B	C → (#xx:3 of @Rd16)			4							—	—	—	—	—	—	8
BST #xx:3, @aa:8	B	C → (#xx:3 of @aa:8)						4				—	—	—	—	—	—	8
BIST #xx:3, Rd	B	$\overline{C} \rightarrow$ (#xx:3 of Rd8)		2								—	—	—	—	—	—	2
BIST #xx:3, @Rd	B	$\overline{C} \rightarrow$ (#xx:3 of @Rd16)			4							—	—	—	—	—	—	8
BIST #xx:3, @aa:8	B	$\overline{C} \rightarrow$ (#xx:3 of @aa:8)						4				—	—	—	—	—	—	8
BAND #xx:3, Rd	B	C∧(#xx:3 of Rd8) → C		2								—	—	—	—	—	↕	2
BAND #xx:3, @Rd	B	C∧(#xx:3 of @Rd16) → C			4							—	—	—	—	—	↕	6
BAND #xx:3, @aa:8	B	C∧(#xx:3 of @aa:8) → C						4				—	—	—	—	—	↕	6
BIAND #xx:3, Rd	B	$C \wedge (\overline{\#xx:3 \text{ of } Rd8}) \rightarrow C$		2								—	—	—	—	—	↕	2
BIAND #xx:3, @Rd	B	$C \wedge (\overline{\#xx:3 \text{ of } @Rd16}) \rightarrow C$			4							—	—	—	—	—	↕	6
BIAND #xx:3, @aa:8	B	$C \wedge (\overline{\#xx:3 \text{ of } @aa:8}) \rightarrow C$						4				—	—	—	—	—	↕	6
BOR #xx:3, Rd	B	C∨(#xx:3 of Rd8) → C		2								—	—	—	—	—	↕	2
BOR #xx:3, @Rd	B	C∨(#xx:3 of @Rd16) → C			4							—	—	—	—	—	↕	6
BOR #xx:3, @aa:8	B	C∨(#xx:3 of @aa:8) → C						4				—	—	—	—	—	↕	6
BIOR #xx:3, Rd	B	$C \vee (\overline{\#xx:3 \text{ of } Rd8}) \rightarrow C$		2								—	—	—	—	—	↕	2
BIOR #xx:3, @Rd	B	$C \vee (\overline{\#xx:3 \text{ of } @Rd16}) \rightarrow C$			4							—	—	—	—	—	↕	6

Mnemonic	Operand Size	Operation	Branching Condition	Addressing Mode/ Instruction Length (bytes) #xx: 8/16	Rn	@Rn	@(d:16, Rn)	@–Rn/@Rn+	@aa: 8/16	@(d:8, PC)	@@aa	Implied	Condition Code I	H	N	Z	V	C	No. of States
BIOR #xx:3, @aa:8	B	$C \vee (\overline{\#xx:3} \text{ of } \overline{@aa:8}) \rightarrow C$							4				—	—	—	—	—	↕	6
BXOR #xx:3, Rd	B	$C \oplus (\#xx:3 \text{ of } Rd8) \rightarrow C$			2								—	—	—	—	—	↕	2
BXOR #xx:3, @Rd	B	$C \oplus (\#xx:3 \text{ of } @Rd16) \rightarrow C$				4							—	—	—	—	—	↕	6
BXOR #xx:3, @aa:8	B	$C \oplus (\#xx:3 \text{ of } @aa:8) \rightarrow C$							4				—	—	—	—	—	↕	6
BIXOR #xx:3, Rd	B	$C \oplus (\overline{\#xx:3} \text{ of } \overline{Rd8}) \rightarrow C$			2								—	—	—	—	—	↕	2
BIXOR #xx:3, @Rd	B	$C \oplus (\overline{\#xx:3} \text{ of } \overline{@Rd16}) \rightarrow C$				4							—	—	—	—	—	↕	6
BIXOR #xx:3, @aa:8	B	$C \oplus (\overline{\#xx:3} \text{ of } \overline{@aa:8}) \rightarrow C$							4				—	—	—	—	—	↕	6
BRA d:8 (BT d:8)	—	$PC \leftarrow PC+d:8$								2			—	—	—	—	—	—	4
BRN d:8 (BF d:8)	—	$PC \leftarrow PC+2$								2			—	—	—	—	—	—	4
BHI d:8	—	If condition is true then $PC \leftarrow PC+d:8$ else next;	$C \vee Z = 0$							2			—	—	—	—	—	—	4
BLS d:8	—		$C \vee Z = 1$							2			—	—	—	—	—	—	4
BCC d:8 (BHS d:8)	—		$C = 0$							2			—	—	—	—	—	—	4
BCS d:8 (BLO d:8)	—		$C = 1$							2			—	—	—	—	—	—	4
BNE d:8	—		$Z = 0$							2			—	—	—	—	—	—	4
BEQ d:8	—		$Z = 1$							2			—	—	—	—	—	—	4
BVC d:8	—		$V = 0$							2			—	—	—	—	—	—	4
BVS d:8	—		$V = 1$							2			—	—	—	—	—	—	4
BPL d:8	—		$N = 0$							2			—	—	—	—	—	—	4
BMI d:8	—		$N = 1$							2			—	—	—	—	—	—	4
BGE d:8	—		$N \oplus V = 0$							2			—	—	—	—	—	—	4
BLT d:8	—		$N \oplus V = 1$							2			—	—	—	—	—	—	4
BGT d:8	—		$Z \vee (N \oplus V) = 0$							2			—	—	—	—	—	—	4
BLE d:8	—		$Z \vee (N \oplus V) = 1$							2			—	—	—	—	—	—	4
JMP @Rn	—	$PC \leftarrow Rn16$				2							—	—	—	—	—	—	4
JMP @aa:16	—	$PC \leftarrow aa:16$							4				—	—	—	—	—	—	6
JMP @@aa:8	—	$PC \leftarrow @aa:8$									2		—	—	—	—	—	—	8
BSR d:8	—	$SP-2 \rightarrow SP$ $PC \rightarrow @SP$ $PC \leftarrow PC+d:8$								2			—	—	—	—	—	—	6

Mnemonic	Operand Size	Operation	Addressing Mode/ Instruction Length (bytes)									Condition Code						No. of States
			#xx: 8/16	Rn	@Rn	@(d:16, Rn)	@–Rn/@Rn+	@aa: 8/16	@(d:8, PC)	@@aa	Implied	I	H	N	Z	V	C	
JSR @Rn	—	SP–2 → SP PC → @SP PC ← Rn16			2							—	—	—	—	—	—	6
JSR @aa:16	—	SP–2 → SP PC → @SP PC ← aa:16						4				—	—	—	—	—	—	8
JSR @@aa:8	—	SP–2 → SP PC → @SP PC ← @aa:8								2		—	—	—	—	—	—	8
RTS	—	PC ← @SP SP+2 → SP									2	—	—	—	—	—	—	8
RTE	—	CCR ← @SP SP+2 → SP PC ← @SP SP+2 → SP									2	↕	↕	↕	↕	↕	↕	10
SLEEP	—	Transit to sleep mode.									2	—	—	—	—	—	—	2
LDC #xx:8, CCR	B	#xx:8 → CCR	2									↕	↕	↕	↕	↕	↕	2
LDC Rs, CCR	B	Rs8 → CCR		2								↕	↕	↕	↕	↕	↕	2
STC CCR, Rd	B	CCR → Rd8		2								—	—	—	—	—	—	2
ANDC #xx:8, CCR	B	CCR∧#xx:8 → CCR	2									↕	↕	↕	↕	↕	↕	2
ORC #xx:8, CCR	B	CCR∨#xx:8 → CCR	2									↕	↕	↕	↕	↕	↕	2
XORC #xx:8, CCR	B	CCR⊕#xx:8 → CCR	2									↕	↕	↕	↕	↕	↕	2
NOP	—	PC ← PC+2									2	—	—	—	—	—	—	2
EEPMOV	—	if R4L≠0 Repeat @R5 → @R6 R5+1 → R5 R6+1 → R6 R4L–1 → R4L Until R4L=0 else next;									4	—	—	—	—	—	—	(4)

Notes: (1) Set to 1 when there is a carry or borrow from bit 11; otherwise cleared to 0.

(2) If the result is zero, the previous value of the flag is retained; otherwise the flag is cleared to 0.

(3) Set to 1 if decimal adjustment produces a carry; otherwise retains value prior to arithmetic operation.

(4) The number of states required for execution is 4n + 9 (n = value of R4L). 4n + 8 for HD64F38024, H8/38024S Group, and H8/38124 Group.

(5) Set to 1 if the divisor is negative; otherwise cleared to 0.

(6) Set to 1 if the divisor is zero; otherwise cleared to 0.

A.2 Operation Code Map

Table A.2 is an operation code map. It shows the operation codes contained in the first byte of the instruction code (bits 15 to 8 of the first instruction word).

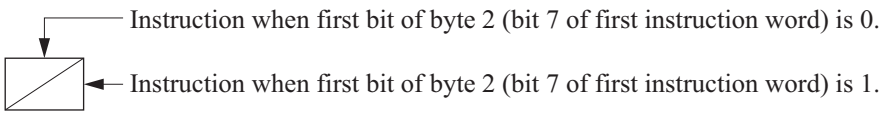

Table A.2 Operation Code Map

High \ Low	0	1	2	3	4	5	6	7	8	9	A	B	C	D	E	F
0	NOP	SLEEP	STC	LDC	ORC	XORC	ANDC	LDC	ADD		INC	ADDS	MOV		ADDX	DAA
1	SHLL / SHAL	SHLR / SHAR	ROTXL / ROTL	ROTXR / ROTR	OR	XOR	AND	NOT / NEG	SUB		DEC	SUBS	CMP		SUBX	DAS
2	MOV															
3																
4	BRA	BRN	BHI	BLS	BCC	BCS	BNE	BEQ	BVC	BVS	BPL	BMI	BGE	BLT	BGT	BLE
5	MULXU	DIVXU			RTS	BSR	RTE				JMP			JSR		
6	BSET	BNOT	BCLR	BTST	MOV*											
7					BOR / BIOR	BXOR / BIXOR	BAND / BIAND	BST / BIST / BLD / BILD		MOV		EEPMOV	Bit-manipulation instructions			
8	ADD															
9	ADDX															
A	CMP															
B	SUBX															
C	OR															
D	XOR															
E	AND															
F	MOV															

Note: * The PUSH and POP instructions are identical in machine language to MOV instructions.

A.3 Number of Execution States

The tables here can be used to calculate the number of states required for instruction execution. Table A.4 indicates the number of states required for each cycle (instruction fetch, read/write, etc.), and table A.3 indicates the number of cycles of each type occurring in each instruction. The total number of states required for execution of an instruction can be calculated from these two tables as follows:

Execution states = $I \times S_I + J \times S_J + K \times S_K + L \times S_L + M \times S_M + N \times S_N$

Examples: When instruction is fetched from on-chip ROM, and an on-chip RAM is accessed.

BSET #0, @FF00
From table A.4:
$I = L = 2, \quad J = K = M = N = 0$
From table A.3:
$S_I = 2, \quad S_L = 2$
Number of states required for execution = $2 \times 2 + 2 \times 2 = 8$
When instruction is fetched from on-chip ROM, branch address is read from on-chip ROM, and on-chip RAM is used for stack area.

JSR @@ 30
From table A.4:
$I = 2, \quad J = K = 1, \quad L = M = N = 0$
From table A.3:
$S_I = S_J = S_K = 2$
Number of states required for execution = $2 \times 2 + 1 \times 2 + 1 \times 2 = 8$

Table A.3 Number of Cycles in Each Instruction

Execution Status (instruction cycle)		Access Location	
		On-Chip Memory	On-Chip Peripheral Module
Instruction fetch	S_I	2	—
Branch address read	S_J		
Stack operation	S_K		
Byte data access	S_L		2 or 3*
Word data access	S_M		—
Internal operation	S_N	1	

Note: * Depends on which on-chip module is accessed. See section 2.9.1, Notes on Data Access for details.

Table A.4 Number of Cycles in Each Instruction

Instruction	Mnemonic	Instruction Fetch I	Branch Addr. Read J	Stack Operation K	Byte Data Access L	Word Data Access M	Internal Operation N
ADD	ADD.B #xx:8, Rd	1					
	ADD.B Rs, Rd	1					
	ADD.W Rs, Rd	1					
ADDS	ADDS.W #1, Rd	1					
	ADDS.W #2, Rd	1					
ADDX	ADDX.B #xx:8, Rd	1					
	ADDX.B Rs, Rd	1					
AND	AND.B #xx:8, Rd	1					
	AND.B Rs, Rd	1					
ANDC	ANDC #xx:8, CCR	1					
BAND	BAND #xx:3, Rd	1					
	BAND #xx:3, @Rd	2			1		
	BAND #xx:3, @aa:8	2			1		
Bcc	BRA d:8 (BT d:8)	2					
	BRN d:8 (BF d:8)	2					
	BHI d:8	2					
	BLS d:8	2					
	BCC d:8 (BHS d:8)	2					
	BCS d:8 (BLO d:8)	2					
	BNE d:8	2					
	BEQ d:8	2					
	BVC d:8	2					
	BVS d:8	2					
	BPL d:8	2					
	BMI d:8	2					
	BGE d:8	2					
	BLT d:8	2					
	BGT d:8	2					
	BLE d:8	2					
BCLR	BCLR #xx:3, Rd	1					
	BCLR #xx:3, @Rd	2			2		
	BCLR #xx:3, @aa:8	2			2		
	BCLR Rn, Rd	1					
	BCLR Rn, @Rd	2			2		
	BCLR Rn, @aa:8	2			2		
BIAND	BIAND #xx:3, Rd	1					
	BIAND #xx:3, @Rd	2			1		
	BIAND #xx:3, @aa:8	2			1		

Instruction	Mnemonic	Instruction Fetch I	Branch Addr. Read J	Stack Operation K	Byte Data Access L	Word Data Access M	Internal Operation N
BILD	BILD #xx:3, Rd	1					
	BILD #xx:3, @Rd	2			1		
	BILD #xx:3, @aa:8	2			1		
BIOR	BIOR #xx:3, Rd	1					
	BIOR #xx:3, @Rd	2			1		
	BIOR #xx:3, @aa:8	2			1		
BIST	BIST #xx:3, Rd	1					
	BIST #xx:3, @Rd	2			2		
	BIST #xx:3, @aa:8	2			2		
BIXOR	BIXOR #xx:3, Rd	1					
	BIXOR #xx:3, @Rd	2			1		
	BIXOR #xx:3, @aa:8	2			1		
BLD	BLD #xx:3, Rd	1					
	BLD #xx:3, @Rd	2			1		
	BLD #xx:3, @aa:8	2			1		
BNOT	BNOT #xx:3, Rd	1					
	BNOT #xx:3, @Rd	2			2		
	BNOT #xx:3, @aa:8	2			2		
	BNOT Rn, Rd	1					
	BNOT Rn, @Rd	2			2		
	BNOT Rn, @aa:8	2			2		
BOR	BOR #xx:3, Rd	1					
	BOR #xx:3, @Rd	2			1		
	BOR #xx:3, @aa:8	2			1		
BSET	BSET #xx:3, Rd	1					
	BSET #xx:3, @Rd	2			2		
	BSET #xx:3, @aa:8	2			2		
	BSET Rn, Rd	1					
	BSET Rn, @Rd	2			2		
	BSET Rn, @aa:8	2			2		
BSR	BSR d:8	2		1			
BST	BST #xx:3, Rd	1					
	BST #xx:3, @Rd	2			2		
	BST #xx:3, @aa:8	2			2		
BTST	BTST #xx:3, Rd	1					
	BTST #xx:3, @Rd	2			1		
	BTST #xx:3, @aa:8	2			1		
	BTST Rn, Rd	1					
	BTST Rn, @Rd	2			1		

Instruction	Mnemonic	Instruction Fetch I	Branch Addr. Read J	Stack Operation K	Byte Data Access L	Word Data Access M	Internal Operation N
BTST	BTST Rn, @aa:8	2			1		
BXOR	BXOR #xx:3, Rd	1					
	BXOR #xx:3, @Rd	2			1		
	BXOR #xx:3, @aa:8	2			1		
CMP	CMP. B #xx:8, Rd	1					
	CMP. B Rs, Rd	1					
	CMP.W Rs, Rd	1					
DAA	DAA.B Rd	1					
DAS	DAS.B Rd	1					
DEC	DEC.B Rd	1					
DIVXU	DIVXU.B Rs, Rd	1					12
EEPMOV	EEPMOV	2			2n+2*		1*
INC	INC.B Rd	1					
JMP	JMP @Rn	2					
	JMP @aa:16	2					2
	JMP @@aa:8	2	1				2
JSR	JSR @Rn	2		1			
	JSR @aa:16	2		1			2
	JSR @@aa:8	2	1	1			
LDC	LDC #xx:8, CCR	1					
	LDC Rs, CCR	1					
MOV	MOV.B #xx:8, Rd	1					
	MOV.B Rs, Rd	1					
	MOV.B @Rs, Rd	1			1		
	MOV.B @(d:16, Rs), Rd	2			1		
	MOV.B @Rs+, Rd	1			1		2
	MOV.B @aa:8, Rd	1			1		
	MOV.B @aa:16, Rd	2			1		
	MOV.B Rs, @Rd	1			1		
	MOV.B Rs, @(d:16, Rd)	2			1		
	MOV.B Rs, @–Rd	1			1		2
	MOV.B Rs, @aa:8	1			1		
	MOV.B Rs, @aa:16	2			1		
	MOV.W #xx:16, Rd	2					
	MOV.W Rs, Rd	1					
	MOV.W @Rs, Rd	1				1	
	MOV.W @(d:16, Rs), Rd	2				1	
	MOV.W @Rs+, Rd	1				1	2
	MOV.W @aa:16, Rd	2				1	

Note: * n: Initial value in R4L. The source and destination operands are accessed n + 1 times each.
Internal operation N is 0 for HD64F38024, HD64F38024F, H8/38024S Group and H8/38124 Group.

Instruction	Mnemonic	Instruction Fetch I	Branch Addr. Read J	Stack Operation K	Byte Data Access L	Word Data Access M	Internal Operation N
MOV	MOV.W Rs, @Rd	1				1	
	MOV.W Rs, @(d:16, Rd)	2				1	
	MOV.W Rs, @–Rd	1				1	2
	MOV.W Rs, @aa:16	2				1	
MULXU	MULXU.B Rs, Rd	1					12
NEG	NEG.B Rd	1					
NOP	NOP	1					
NOT	NOT.B Rd	1					
OR	OR.B #xx:8, Rd	1					
	OR.B Rs, Rd	1					
ORC	ORC #xx:8, CCR	1					
ROTL	ROTL.B Rd	1					
ROTR	ROTR.B Rd	1					
ROTXL	ROTXL.B Rd	1					
ROTXR	ROTXR.B Rd	1					
RTE	RTE	2		2			2
RTS	RTS	2		1			2
SHAL	SHAL.B Rd	1					
SHAR	SHAR.B Rd	1					
SHLL	SHLL.B Rd	1					
SHLR	SHLR.B Rd	1					
SLEEP	SLEEP	1					
STC	STC CCR, Rd	1					
SUB	SUB.B Rs, Rd	1					
	SUB.W Rs, Rd	1					
SUBS	SUBS.W #1, Rd	1					
	SUBS.W #2, Rd	1					
POP	POP Rd	1		1			2
PUSH	PUSH Rs	1		1			2
SUBX	SUBX.B #xx:8, Rd	1					
	SUBX.B Rs, Rd	1					
XOR	XOR.B #xx:8, Rd	1					
	XOR.B Rs, Rd	1					
XORC	XORC #xx:8, CCR	1					

Appendix B Internal I/O Registers

B.1 Addresses

Upper Address: H'F0

Lower Address	Register Name	Bit Names								Module Name
		Bit 7	Bit 6	Bit 5	Bit 4	Bit 3	Bit 2	Bit 1	Bit 0	
H'20	FLMCR1	—	SWE	ESU	PSU	EV	PV	E	P	ROM
H'21	FLMCR2	FLER	—	—	—	—	—	—	—	
H'22	FLPWCR	PDWND	—	—	—	—	—	—	—	
H'23	EBR	—	—	—	EB4	EB3	EB2	EB1	EB0	
H'24										
H'25										
H'26										
H'27										
H'28										
H'29										
H'2A										
H'2B	FENR	FLSHE	—	—	—	—	—	—	—	
H'2C										
H'2D										
H'2E										
H'2F										

Upper Address: H'FF

Lower Address	Register Name	Bit Names								Module Name
		Bit 7	Bit 6	Bit 5	Bit 4	Bit 3	Bit 2	Bit 1	Bit 0	
H'80										
H'81										
H'82										
H'83										
H'84										
H'85										
H'86	LVDCR	LVDE	—	VINTDSEL	VINTUSEL	LVDSL	LVDRE	LVDDE	LVDUE	Low-voltage detect circuit*
H'87	LVDSR	OVF	—	—	—	VREFSEL	—	LVDDF	LVDUF	
H'88										
H'89										
H'8A										
H'8B										
H'8C	ECPWCRH	ECPWCRH7	ECPWCRH6	ECPWCRH5	ECPWCRH4	ECPWCRH3	ECPWCRH2	ECPWCRH1	ECPWCRH0	Asynchronous event counter
H'8D	ECPWCRL	ECPWCRL7	ECPWCRL6	ECPWCRL5	ECPWCRL4	ECPWCRL3	ECPWCRL2	ECPWCRL1	ECPWCRL0	
H'8E	ECPWDRH	ECPWDRH7	ECPWDRH6	ECPWDRH5	ECPWDRH4	ECPWDRH3	ECPWDRH2	ECPWDRH1	ECPWDRH0	
H'8F	ECPWDRL	ECPWDRL7	ECPWDRL6	ECPWDRL5	ECPWDRL4	ECPWDRL3	ECPWDRL2	ECPWDRL1	ECPWDRL0	
H'90	WEGR	WKEGS7	WKEGS6	WKEGS5	WKEGS4	WKEGS3	WKEGS2	WKEGS1	WKEGS0	System control
H'91	SPCR	—	—	SPC32	—	SCINV3	SCINV2	—	—	SCI3
H'92	AEGSR	AHEGS1	AHEGS0	ALEGS1	ALEGS0	AIEGS1	AIEGS0	ECPWME	—	Asynchronous event counter
H'93										
H'94	ECCR	ACKH1	ACKH0	ACKL1	ACKL0	PWCK2	PWCK1	PWCK0	—	
H'95	ECCSR	OVH	OVL	—	CH2	CUEH	CUEL	CRCH	CRCL	
H'96	ECH	ECH7	ECH6	ECH5	ECH4	ECH3	ECH2	ECH1	ECH0	
H'97	ECL	ECL7	ECL6	ECL5	ECL4	ECL3	ECL2	ECL1	ECL0	
H'98										
H'99										
H'9A										
H'9B										
H'9C										
H'9D										
H'9E										
H'9F										

Upper Address: H'FF

Lower Address	Register Name	Bit Names								Module Name
		Bit 7	Bit 6	Bit 5	Bit 4	Bit 3	Bit 2	Bit 1	Bit 0	
H'A0										
H'A1										
H'A2										
H'A3										
H'A4										
H'A5										
H'A6										
H'A7										
H'A8	SMR	COM	CHR	PE	PM	STOP	MP	CKS1	CKS0	SCI3
H'A9	BRR	BRR7	BRR6	BRR5	BRR4	BRR3	BRR2	BRR1	BRR0	
H'AA	SCR3	TIE	RIE	TE	RE	—	TEIE	CKE1	CKE0	
H'AB	TDR	TDR7	TDR6	TDR5	TDR4	TDR3	TDR2	TDR1	TDR0	
H'AC	SSR	TDRE	RDRF	OER	FER	PER	TEND	—	—	
H''AD	RDR	RDR7	RDR6	RDR5	RDR4	RDR3	RDR2	RDR1	RDR0	
H'AE										
H'AF										
H'B0	TMA	—	—	—	—	TMA3	TMA2	TMA1	TMA0	Timer A
H'B1	TCA	TCA7	TCA6	TCA5	TCA4	TCA3	TCA2	TCA1	TCA0	
H'B2	TCSRW	B6WI	TCWE	B4WI	TCSRWE	B2WI	WDON	BOWI	WRST	Watchdog
H'B3	TCW	TCW7	TCW6	TCW5	TCW4	TCW3	TCW2	TCW1	TCW0	timer
H'B4	TMC	TMC7	TMC6	TMC5	—	—	TMC2	TMC1	TMC0	Timer C
H'B5	TCC/TLC	TCC7/TLC7	TCC6/TLC6	TCC5/TLC5	TCC4/TLC4	TCC3/TLC3	TCC2/TLC2	TCC1/TLC1	TCC0/TLC0	
H'B6	TCRF	TOLH	CKSH2	CKSH1	CKSH0	TOLL	CKSL2	CKSL1	CKSL0	Timer F
H'B7	TCSRF	OVFH	CMFH	OVIEH	CCLRH	OVFL	CMFL	OVIEL	CCLRL	
H'B8	TCFH	TCFH7	TCFH6	TCFH5	TCFH4	TCFH3	TCFH2	TCFH1	TCFH0	
H'B9	TCFL	TCFL7	TCFL6	TCFL5	TCFL4	TCFL3	TCFL2	TCFL1	TCFL0	
H'BA	OCRFH	OCRFH7	OCRFH6	OCRFH5	OCRFH4	OCRFH3	OCRFH2	OCRFH1	OCRFH0	
H'BB	OCRFL	OCRFL7	OCRFL6	OCRFL5	OCRFL4	OCRFL3	OCRFL2	OCRFL1	OCRFL0	
H'BC	TMG	OVFH	OVFL	OVIE	IIEGS	CCLR1	CCLR0	CKS1	CKS0	Timer G
H'BD	ICRGF	ICRGF7	ICRGF6	ICRGF5	ICRGF4	ICRGF3	ICRGF2	ICRGF1	ICRGF0	
H'BE	ICRGR	ICRGR7	ICRGR6	ICRGR5	ICRGR4	ICRGR3	ICRGR2	ICRGR1	ICRGR0	
H'BF										

Upper Address: H'FF

Lower Address	Register Name	Bit Names								Module Name
		Bit 7	Bit 6	Bit 5	Bit 4	Bit 3	Bit 2	Bit 1	Bit 0	
H'C0	LPCR	DTS1	DTS0	CMX	—	SGS3	SGS2	SGS1	SGS0	LCD controller/ driver
H'C1	LCR	—	PSW	ACT	DISP	CKS3	CKS2	CKS1	CKS0	
H'C2	LCR2	LCDAB	—	—	—	CDS3*	CDS2*	CDS1*	CDS0*	
H'C3	LVDCNT	CNT7	CNT6	CNT5	CNT4	CNT3	CNT2	CNT1	CNT0	Low-voltage detect circuit*
H'C4	ADRRH	ADR9	ADR8	ADR7	ADR6	ADR5	ADR4	ADR3	ADR2	A/D converter
H'C5	ADRRL	ADR1	ADR0	—	—	—	—	—	—	
H'C6	AMR	CKS	TRGE	—	—	CH3	CH2	CH1	CH0	
H'C7	ADSR	ADSF	—	—	—	—	—	—	—	
H'C8	PMR1	IRQ3	—	—	IRQ4	TMIG	—	—	—	I/O port
H'C9	PMR2	—	—	POF1	—	—	WDCKS	NCS	IRQ0	
H'CA	PMR3	AEVL	AEVH	—	—	—	TMOFH	TMOFL	UD	
H'CB										
H'CC	PMR5	WKP7	WKP6	WKP5	WKP4	WKP3	WKP2	WKP1	WKP0	
H'CD	PWCR2	—	—	—	—	—	PWCR22*	PWCR21	PWCR20	10 bit PWM2
H'CE	PWDRU2	—	—	—	—	—	—	PWDRU21	PWDRU20	
H'CF	PWDRL2	PWDRL27	PWDRL26	PWDRL25	PWDRL24	PWDRL23	PWDRL22	PWDRL21	PWDRL20	
H'D0	PWCR1	—	—	—	—	—	PWCR12*	PWCR11	PWCR10	10 bit PWM1
H'D1	PWDRU1	—	—	—	—	—	—	PWDRU11	PWDRU10	
H'D2	PWDRL1	PWDRL17	PWDRL16	PWDRL15	PWDRL14	PWDRL13	PWDRL12	PWDRL11	PWDRL10	
H'D3										
H'D4	PDR1	P17	P16	—	P14	P13	—	—	—	I/O port
H'D5										
H'D6	PDR3	P37	P36	P35	P34	P33	P32	P31	P30	
H'D7	PDR4	—	—	—	—	P43	P42	P41	P40	
H'D8	PDR5	P57	P56	P55	P54	P53	P52	P51	P50	
H'D9	PDR6	P67	P66	P65	P64	P63	P62	P61	P60	
H'DA	PDR7	P77	P76	P75	P74	P73	P72	P71	P70	
H'DB	PDR8	P87	P86	P85	P84	P83	P82	P81	P80	
H'DC	PDR9	—	—	P95	P94	P93	P92	P91	P90	
H'DD	PDRA	—	—	—	—	PA3	PA2	PA1	PA0	
H'DE	PDRB	PB7	PB6	PB5	PB4	PB3	PB2	PB1	PB0	
H'DF										

Upper Address: H'FF

Lower Address	Register Name	Bit Names								Module Name
		Bit 7	Bit 6	Bit 5	Bit 4	Bit 3	Bit 2	Bit 1	Bit 0	
H'E0	PUCR1	PUCR17	PUCR16	—	PUCR14	PUCR13	—	—	—	I/O port
H'E1	PUCR3	PUCR37	PUCR36	PUCR35	PUCR34	PUCR33	PUCR32	PUCR31	PUCR30	
H'E2	PUCR5	PUCR57	PUCR56	PUCR55	PUCR54	PUCR53	PUCR52	PUCR51	PUCR50	
H'E3	PUCR6	PUCR67	PUCR66	PUCR65	PUCR64	PUCR63	PUCR62	PUCR61	PUCR60	
H'E4	PCR1	PCR17	PCR16	—	PCR14	PCR13	—	—	—	
H'E5										
H'E6	PCR3	PCR37	PCR36	PCR35	PCR34	PCR33	PCR32	PCR31	PCR30	
H'E7	PCR4	—	—	—	—	—	PCR42	PCR41	PCR40	
H'E8	PCR5	PCR57	PCR56	PCR55	PCR54	PCR53	PCR52	PCR51	PCR50	
H'E9	PCR6	PCR67	PCR66	PCR65	PCR64	PCR63	PCR62	PCR61	PCR60	
H'EA	PCR7	PCR77	PCR76	PCR75	PCR74	PCR73	PCR72	PCR71	PCR70	
H'EB	PCR8	PCR87	PCR86	PCR85	PCR84	PCR83	PCR82	PCR81	PCR80	
H'EC	PMR9	—	—	—	—	PIOFF	—	PWM2	PWM1	
H'ED	PCRA	—	—	—	—	PCRA3	PCRA2	PCRA1	PCRA0	
H'EE	PMRB	—	—	—	—	IRQ1	—	—	—	
H'EF										
H'F0	SYSCR1	SSBY	STS2	STS1	STS0	LSON	—	MA1	MA0	System control
H'F1	SYSCR2	—	—	—	NESEL	DTON	MSON	SA1	SA0	
H'F2	IEGR	—	—	—	IEG4	IEG3	—	IEG1	IEG0	
H'F3	IENR1	IENTA	—	IENWP	IEN4	IEN3	IENEC2	IEN1	IEN0	
H'F4	IENR2	IENDT	IENAD	—	IENTG	IENTFH	IENTFL	IENTC	IENEC	
H'F5	OSCCR*	SUBSTP	—	—	—	—	IRQAECF	OSCF	—	
H'F6	IRR1	IRRTA	—	—	IRRI4	IRRI3	IRREC2	IRRI1	IRRI0	
H'F7	IRR2	IRRDT	IRRAD	—	IRRTG	IRRTFH	IRRTFL	IRRTC	IRREC	
H'F8	TMW*	—	—	—	—	CKS3	CKS2	CKS1	CKS0	Watchdog timer
H'F9	IWPR	IWPF7	IWPF6	IWPF5	IWPF4	IWPF3	IWPF2	IWPF1	IWPF0	System control
H'FA	CKSTPR1	—	—	S32CKSTP	ADCKSTP	TGCKSTP	TFCKSTP	TCCKSTP	TACKSTP	
H'FB	CKSTPR2	—	—	—	PW2CKSTP	AECKSTP	WDCKSTP	PW1CKSTP	LDCKSTP	
H'FC										
H'FD										
H'FE										
H'FF										

[Legend]
SCI: Serial Communication Interface

Note: * H8/38124 only

B.2 Functions

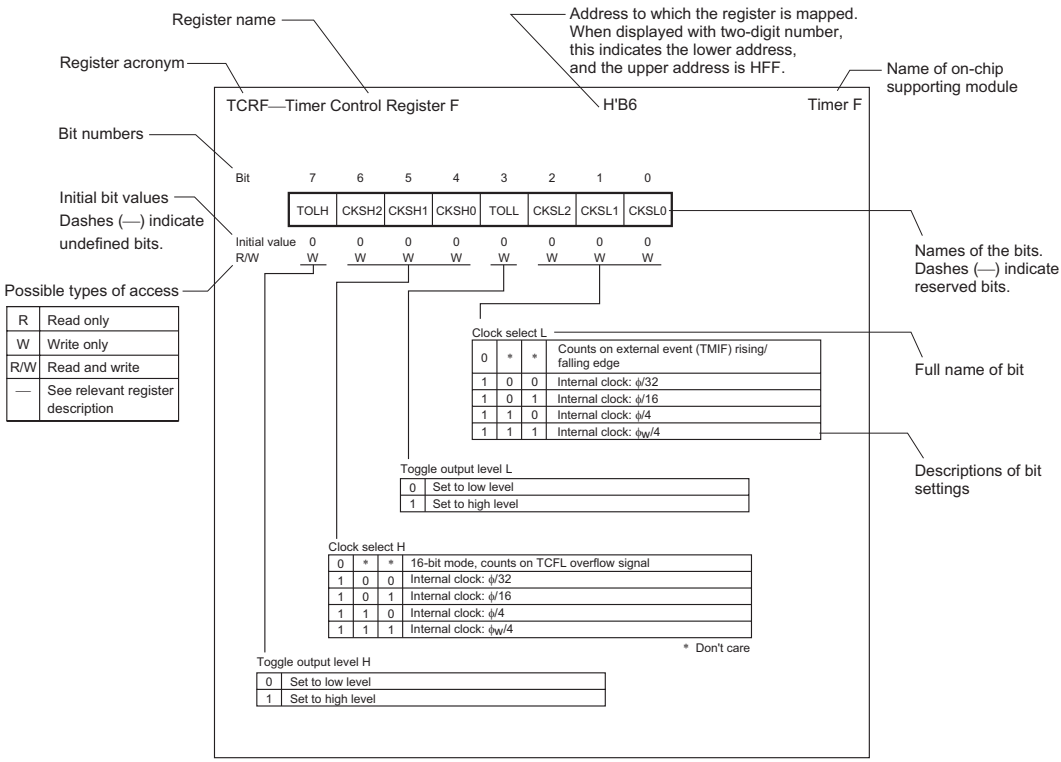

FLMCR1—Flash Memory Control Register 1 H'F020 Flash Memory

Bit	7	6	5	4	3	2	1	0
	—	SWE	ESU	PSU	EV	PV	E	P
Initial value	0	0	0	0	0	0	0	0
Read/Write	—	R/W	R/W	R/W	R/W	R/W	R/W	R/W

Program

0	Program mode cleared (initial value)
1	Transition to program mode [Setting condition] When SWE = 1 and PSU = 1

Erase

0	Erase mode cleared (initial value)
1	Transition to erase mode [Setting condition] When SWE = 1 and ESU = 1

Program-Verify

0	Program-verify mode cleared (initial value)
1	Transition to program-verify mode [Setting condition] When SWE = 1

Erase-Verify

0	Erase-verify mode cleared (initial value)
1	Transition to erase-verify mode [Setting condition] When SWE = 1

Program-Setup

0	Program-setup cleared (initial value)
1	Program setup [Setting condition] When SWE = 1

Erase-Setup

0	Erase-setup cleared (initial value)
1	Erase setup [Setting condition] When SWE = 1

Software write enable bit

0	Writing/erasing disabled (initial value)
1	Writing/erasing enabled

FLMCR2—Flash Memory Control Register 2 H'F021 Flash Memory

Bit	7	6	5	4	3	2	1	0
	FLER	—	—	—	—	—	—	—
Initial value	0	0	0	0	0	0	0	0
Read/Write	R	—	—	—	—	—	—	—

Flash memory error

Note: A write to FLMCR2 is prohibited.

FLPWCR—Flash Memory Power Control Register H'F022 Flash Memory

Bit	7	6	5	4	3	2	1	0
	PDWND	—	—	—	—	—	—	—
Initial value	0	0	0	0	0	0	0	0
Read/Write	R/W	—	—	—	—	—	—	—

Power-down Disable

0	When the system transits to sub-active mode, the flash memory changes to low-power mode
1	When the system transits to sub-active mode, the flash memory changes to normal mode

EBR—Erase Block Register H'F023 Flash Memory

Bit	7	6	5	4	3	2	1	0
	—	—	—	EB4	EB3	EB2	EB1	EB0
Initial value	0	0	0	0	0	0	0	0
Read/Write	—	—	—	R/W	R/W	R/W	R/W	R/W

Blocks 4 to 0

0	When a block of EB4 to EB0 is not selected (initial value)
1	When a block of EB4 to EB0 is selected

Note: Set the bit of EBR to H'00 when erasing.

FENR—Flash Memory Enable Register H'F02B Flash Memory

Bit	7	6	5	4	3	2	1	0
	FLSHE	—	—	—	—	—	—	—
Initial value	0	0	0	0	0	0	0	0
Read/Write	R/W	—	—	—	—	—	—	—

Flash Memory Control Register Enable

0	The flash memory control register cannot be accessed
1	The flash memory control register can be accessed

LVDCR—Low-Voltage Detection Control Register H'86 LVDC

Note: This register is implemented on the H8/38124 Group only.

Bit	7	6	5	4	3	2	1	0
	LVDE	—	VINTDSEL	VINTUSEL	LVDSEL	LVDRE	LVDDE	LVDUE
Initial value	0*	0	0	0	0*	0*	0	0
Read/Write	R/W	R/W	R/W	R/W	R/W	R/W	R/W	R/W

Voltage Rise Interrupt Enable

0	Voltage rise interrupt requests disabled (initial value)
1	Voltage rise interrupt requests enabled

Voltage Drop Interrupt Enable

0	Voltage drop interrupt requests disabled (initial value)
1	Voltage drop interrupt requests enabled

LVDR Enable

0	LVDR resets disabled	(initial value)
1	LVDR resets enabled	

LVDR Detection Level Select

0	Reset detection voltage 2.3 V (typ.)	(initial value)
1	Reset detection voltage 3.3 V (typ.)	

Power Supply Rise (LVDU) Detection Level External Input Select

0	LVDU detection level generated by on-chip ladder resistor (initial value)
1	LVDU detection level input to extU pin

Power Supply Drop (LVDD) Detection Level External Input Select

0	LVDD detection level generated by on-chip ladder resistor (initial value)
1	LVDD detection level input to extD pin

LVD Enable

0	Low-voltage detection circuit not used (standby status) (initial value)
1	Low-voltage detection circuit use

Note: * These bits are not initialized by resets trigged by LVDR. They are initialized by power-on resets and watchdog timer resets.

LVDSR—Low-Voltage Detection Status Register H'87 LVDC

Note: This register is implemented on the H8/38124 Group only.

Bit	7	6	5	4	3	2	1	0
	OVF	—	—	—	VREFSEL	—	LVDDF	LVDUF
Initial value	0*	0	0	0	0	0	0*	0*
Read/Write	R/W	R/W	R/W	R/W	R/W	R/W	R/W	R/W

LVD Power Supply Voltage Rise Flag

0	[Clearing condition] (initial v alue) When 0 is written after reading 1
1	[Setting condition] When the power supply voltage drops below Vint(D) while the LVDUE bit in LVDCR is set to 1, and it rises above Vint(U) before dropping below Vreset1

LVD Power Supply Voltage Drop Flag

0	[Clearing condition] (initial value) When 0 is written after reading 1
1	[Setting condition] When the power supply voltage drops below Vint(D)

Reference Voltage External Input Select

0	The on-chip circuit is used to generate the reference voltage (initial value)
1	The reference voltage is input to the Vref pin from an external source

LVD Reference Voltage Stabilized Flag

0	[Clearing condition] (initial value) When 0 is written after reading 1
1	[Setting condition] When the low-voltage detection counter (LVDCNT) overflows

Note: * These bits initialized by resets trigged by LVDR.

ECPWCRH—Event Counter PWM Compare Register H H'8C AEC

Bit	7	6	5	4	3	2	1	0
	ECPWCRH7	ECPWCRH6	ECPWCRH5	ECPWCRH4	ECPWCRH3	ECPWCRH2	ECPWCRH1	ECPWCRH0
Initial value	1	1	1	1	1	1	1	1
R/W	R/W	R/W	R/W	R/W	R/W	R/W	R/W	R/W

Sets event counter PWM waveform conversion period

ECPWCRL—Event Counter PWM Compare Register L H'8D AEC

Bit	7	6	5	4	3	2	1	0
	ECPWCRL7	ECPWCRL6	ECPWCRL5	ECPWCRL4	ECPWCRL3	ECPWCRL2	ECPWCRL1	ECPWCRL0
Initial value	1	1	1	1	1	1	1	1
R/W	R/W	R/W	R/W	R/W	R/W	R/W	R/W	R/W

Sets event counter PWM waveform conversion period

ECPWDRH—Event Counter PWM Data Register H H'8E AEC

Bit	7	6	5	4	3	2	1	0
	ECPWDRH7	ECPWDRH6	ECPWDRH5	ECPWDRH4	ECPWDRH3	ECPWDRH2	ECPWDRH1	ECPWDRH0
Initial value	0	0	0	0	0	0	0	0
R/W	W	W	W	W	W	W	W	W

Controls event counter PWM waveform generator data

ECPWDRL—Event Counter PWM Data Register L H'8F AEC

Bit	7	6	5	4	3	2	1	0
	ECPWDRL7	ECPWDRL6	ECPWDRL5	ECPWDRL4	ECPWDRL3	ECPWDRL2	ECPWDRL1	ECPWDRL0
Initial value	0	0	0	0	0	0	0	0
R/W	W	W	W	W	W	W	W	W

Controls event counter PWM waveform generator data

WEGR—Wakeup Edge Select Register H'90 System Control

Bit	7	6	5	4	3	2	1	0
	WKEGS7	WKEGS6	WKEGS5	WKEGS4	WKEGS3	WKEGS2	WKEGS1	WKEGS0
Initial value	0	0	0	0	0	0	0	0
Read/Write	R/W	R/W	R/W	R/W	R/W	R/W	R/W	R/W

$\overline{\text{WKPn}}$ Edge Selected

0	$\overline{\text{WKPn}}$ pin falling edge detected
1	$\overline{\text{WKPn}}$ pin rising edge detected

(n = 7 to 0)

SPCR—Serial Port Control Register H'91 SCI3

Bit	7	6	5	4	3	2	1	0
	—	—	SPC32	—	SCINV3	SCINV2	—	—
Initial value	1	1	0	—	0	0	—	—
Read/Write	—	—	R/W	W	R/W	R/W	W	W

RXD_{32} Pin Input Data Inversion Switch

0	RXD_{32} input data is not inverted
1	RXD_{32} input data is inverted

TXD_{32} Pin Output Data Inversion Switch

0	TXD_{32} output data is not inverted
1	TXD_{32} output data is inverted

$P4_2$/TXD_{32} Pin Function Switch

0	Function as $P4_2$ I/O pin
1	Function as TXD_{32} output pin

AEGSR—Input Pin Edge Select Register H'92 AEC

Bit	7	6	5	4	3	2	1	0
	AHEGS1	AHEGS0	ALEGS1	ALEGS0	AIEGS1	AIEGS0	ECPWME	—
Initial value	0	0	0	0	0	0	0	0
Read/Write	R/W	R/W	R/W	R/W	R/W	R/W	R/W	R/W

Event Counter PWM Enable/Disable, IRQAEC Select/Deselect

0	AEC PWM halted, IRQAEC selected
1	AEC PWM operation enabled, IRQAEC deselected

IRQAEC Edge Select

Bit 3	Bit 2	Description
AIEGS1	AIEGS0	
0	0	Falling edge on IRQAEC pin is sensed
0	1	Rising edge on IRQAEC pin is sensed
1	0	Both edges on IRQAEC pin are sensed
1	1	Use prohibited

AEC Edge Select L

Bit 5	Bit 4	Description
ALEGS1	ALEGS0	
0	0	Falling edge on AEVL pin is sensed
0	1	Rising edge on AEVL pin is sensed
1	0	Both edges on AEVL pin are sensed
1	1	Use prohibited

AEC Edge Select H

Bit 7	Bit 6	Description
AHEGS1	AHEGS0	
0	0	Falling edge on AEVH pin is sensed
0	1	Rising edge on AEVH pin is sensed
1	0	Both edges on AEVH pin are sensed
1	1	Use prohibited

ECCR—Event Counter Control Register H'94 AEC

Bit	7	6	5	4	3	2	1	0
	ACKH1	ACKH0	ACKL1	ACKL0	PWCK2	PWCK1	PWCK0	—
Initial value	0	0	0	0	0	0	0	0
Read/Write	R/W	R/W	R/W	R/W	R/W	R/W	R/W	R/W

Event Counter PWM Clock Select

Bit 3	Bit 2	Bit 1	Description
PWCK2	PWCK1	PWCK0	
0	0	0	ϕ/2
0	0	1	ϕ/4
0	1	0	ϕ/8
0	1	1	ϕ/16
1	*	0	ϕ/32
1	*	1	ϕ/64

*: Don't care

AEC Clock Select L

Bit 5	Bit 4	Description
ACKL1	ACKL0	
0	0	AEVL pin input
0	1	ϕ/2
1	0	ϕ/4
1	1	ϕ/8

AEC Clock Select H

Bit 7	Bit 6	Description
ACKH1	ACKH0	
0	0	AEVH pin input
0	1	ϕ/2
1	0	ϕ/4
1	1	ϕ/8

ECCSR—Event Counter Control/Status Register H'95 AEC

Bit	7	6	5	4	3	2	1	0
	OVH	OVL	—	CH2	CUEH	CUEL	CRCH	CRCL
Initial value	0	0	0	0	0	0	0	0
Read/Write	R/W	R/W	R/W	R/W	R/W	R/W	R/W	R/W

Counter Reset Control L

0	ECL is reset
1	ECL reset is cleared and count-up function is enabled

Counter Reset Control H

0	ECH is reset
1	ECH reset is cleared and count-up function is enabled

Count-up Enable L

0	ECL event clock input is disabled. ECL value is held
1	ECL event clock input is enabled

Count-up Enable H

0	ECH event clock input is disabled. ECH value is held
1	ECH event clock input is enabled

Channel Select

0	ECH and ECL are used together as a single-channel 16-bit event counter
1	ECH and ECL are used as two independent 8-bit event counter channels

Counter Overflow L

0	ECL has not overflowed
1	ECL has overflowed

Counter Overflow H

0	ECH has not overflowed
1	ECH has overflowed

ECH—Event Counter H H'96 AEC

Bit	7	6	5	4	3	2	1	0
	ECH7	ECH6	ECH5	ECH4	ECH3	ECH2	ECH1	ECH0
Initial value	0	0	0	0	0	0	0	0
Read/Write	R	R	R	R	R	R	R	R

Count value

Note: ECH and ECL can also be used as the upper and lower halves, respectively, of a 16-bit timer counter (EC).

ECL—Event Counter L H'97 AEC

Bit	7	6	5	4	3	2	1	0
	ECL7	ECL6	ECL5	ECL4	ECL3	ECL2	ECL1	ECL0
Initial value	0	0	0	0	0	0	0	0
Read/Write	R	R	R	R	R	R	R	R

Count value

Note: ECH and ECL can also be used as the upper and lower halves, respectively, of a 16-bit timer counter (EC).

SMR—Serial Mode Register **H'A8** **SCI3**

Bit	7	6	5	4	3	2	1	0
	COM	CHR	PE	PM	STOP	MP	CKS1	CKS0
Initial value	0	0	0	0	0	0	0	0
Read/Write	R/W	R/W	R/W	R/W	R/W	R/W	R/W	R/W

Clock Select

0	0	ϕ clock
0	1	$\phi_W/2$ clock
1	0	$\phi/16$ clock
1	1	$\phi/64$ clock

5 Bit Communication

0	5 bits communication disabled
1	5 bits communication enabled

Stop Bit Length

0	1 stop bit
1	2 stop bits

Parity Mode

0	Even parity
1	Odd parity

Parity Enable

0	Parity bit addition and checking disabled
1	Parity bit addition and checking enabled

Character Length

0	8-bit data/5-bit data
1	7-bit data/5-bit data

Communication Mode

0	Asynchronous mode
1	Synchronous mode

BRR—Bit Rate Register **H'A9** **SCI3**

Bit	7	6	5	4	3	2	1	0
	BRR7	BRR6	BRR5	BRR4	BRR3	BRR2	BRR1	BRR0
Initial value	1	1	1	1	1	1	1	1
Read/Write	R/W	R/W	R/W	R/W	R/W	R/W	R/W	R/W

Serial transmit/receive bit rate

SCR3—Serial Control Register 3 H'AA SCI3

Bit	7	6	5	4	3	2	1	0
	TIE	RIE	TE	RE	—	TEIE	CKE1	CKE0
Initial value	0	0	0	0	0	0	0	0
Read/Write	R/W	R/W	R/W	R/W	R/W	R/W	R/W	R/W

Clock Enable

Bit 1	Bit 0	Description		
CKE1	CKE0	Communication Mode	Clock Source	SCK_{32} Pin Function
0	0	Asynchronous	Internal clock	I/O port
		Synchronous	Internal clock	Serial clock output
0	1	Asynchronous	Internal clock	Clock output
		Synchronous	Reserved (Do not specify this combination)	
1	0	Asynchronous	External clock	Clock input
		Synchronous	External clock	Serial clock input
1	1	Asynchronous	Reserved (Do not specify this combination)	
		Synchronous	Reserved (Do not specify this combination)	

Transmit End Interrupt Enable

0	Transmit end interrupt request (TEI) disabled
1	Transmit end interrupt request (TEI) enabled

Receive Enable

0	Receive operation disabled (RXD_{32} pin is I/O port)
1	Receive operation enabled (RXD_{32} pin is receive data pin)

Transmit Enable

0	Transmit operation disabled (TXD_{32} pin is I/O port)
1	Transmit operation enabled (TXD_{32} pin is transmit data pin)

Receive Interrupt Enable

0	Receive data full interrupt request (RXI) and receive error interrupt request (ERI) disabled
1	Receive data full interrupt request (RXI) and receive error interrupt request (ERI) enabled

Transmit Interrupt Enable

0	Transmit data empty interrupt request (TXI) disabled
1	Transmit data empty interrupt request (TXI) enabled

TDR—Transmit Data Register **H'AB** **SCI3**

Bit	7	6	5	4	3	2	1	0
	TDR7	TDR6	TDR5	TDR4	TDR3	TDR2	TDR1	TDR0
Initial value	1	1	1	1	1	1	1	1
Read/Write	R/W	R/W	R/W	R/W	R/W	R/W	R/W	R/W

Data for transfer to TSR

SSR—Serial Status Register H'AC SCI3

Bit	7	6	5	4	3	2	1	0
	TDRE	RDRF	OER	FER	PER	TEND	—	—
Initial value	1	0	0	0	0	1	0	0
Read/Write	R/(W)*	R/(W)*	R/(W)*	R/(W)*	R/(W)*	R	R	R/W

Transmit End

0	Transmission in progress [Clearing conditions] · After reading TDRE = 1, cleared by writing 0 to TDRE · When data is written to TDR by an instruction
1	Transmission ended [Setting conditions] · When bit TE in serial control register3 (SCR3) is cleared to 0 · When bit TDRE is set to 1 when the last bit of a transmit character is sent

Parity Error

0	Reception in progress or completed normally [Clearing condition] After reading PER = 1, cleared by writing 0 to PER
1	A parity error has occurred during reception [Setting condition] When the number of 1 bits in the receive data plus parity bit does not match the parity designated by the parity mode bit (PM) in the serial mode register (SMR)

Framing Error

0	Reception in progress or completed normally [Clearing condition] After reading FER = 1, cleared by writing 0 to FER
1	A framing error has occurred during reception [Setting condition] When the stop bit at the end of the receive data is checked for a value of 1 at completion of reception, and the stop bit is 0

Overrun Error

0	Reception in progress or completed [Clearing condition] After reading OER = 1, cleared by writing 0 to OER
1	An overrun error has occurred during reception [Setting condition] When the next serial reception is completed with RDRF set to 1

Receive Data Register Full

0	There is no receive data in RDR [Clearing conditions] · After reading RDRF = 1, cleared by writing 0 to RDRF · When RDR data is read by an instruction
1	There is receive data in RDR [Setting condition] When reception ends normally and receive data is transferred from RSR to RDR

Transmit Data Register Empty

0	Transmit data written in TDR has not been transferred to TSR [Clearing conditions] · After reading TDRE = 1, cleared by writing 0 to TDRE · When data is written to TDR by an instruction
1	Transmit data has not been written to TDR, or transmit data written in TDR has been transferred to TSR [Setting conditions] · When bit TE in serial control register3 (SCR3) is cleared to 0 · When data is transferred from TDR to TSR

Note: * Only a write of 0 for flag clearing is possible.

RDR—Receive Data Register H'AD SCI3

Bit	7	6	5	4	3	2	1	0
	RDR7	RDR6	RDR5	RDR4	RDR3	RDR2	RDR1	RDR0
Initial value	0	0	0	0	0	0	0	0
Read/Write	R	R	R	R	R	R	R	R

Serial receiving data are stored

TMA—Timer Mode Register A H'B0 Timer A

Bit	7	6	5	4	3	2	1	0
	—	—	—	—	TMA3	TMA2	TMA1	TMA0
Initial value	—	—	—	1	0	0	0	0
Read/Write	W	W	W	—	R/W	R/W	R/W	R/W

Internal Clock Select

TMA3	TMA2	TMA1	TMA0	Prescaler and Divider Ratio or Overflow Period		Function
0	0	0	0	PSS	ϕ/8192	Interval timer
			1	PSS	ϕ/4096	
		1	0	PSS	ϕ/2048	
			1	PSS	ϕ/512	
	1	0	0	PSS	ϕ/256	
			1	PSS	ϕ/128	
		1	0	PSS	ϕ/32	
			1	PSS	ϕ/8	
1	0	0	0	PSW	1 s	Clock time base (when using 32.768 kHz)
			1	PSW	0.5 s	
		1	0	PSW	0.25 s	
			1	PSW	0.03125 s	
	1	0	0	PSW and TCA are reset		
			1			
		1	0			
			1			

TCA—Timer Counter A **H'B1** **Timer A**

Bit	7	6	5	4	3	2	1	0
	TCA7	TCA6	TCA5	TCA4	TCA3	TCA2	TCA1	TCA0
Initial value	0	0	0	0	0	0	0	0
Read/Write	R	R	R	R	R	R	R	R

Count value

TCSRW—Timer Control/Status Register W H'B2 Watchdog Timer

Bit	7	6	5	4	3	2	1	0
	B6WI	TCWE	B4WI	TCSRWE	B2WI	WDON	BOWI	WRST
Initial value	1	0	1	0	1	0*2	1	0
Read/Write	R	R/(W)*1	R	R/(W)*1	R	R/(W)*1	R	R/(W)*1

Watchdog Timer Reset

0	Clearing conditions: Reset by $\overline{\text{RES}}$ pin When TCSRWE = 1, and 0 is written in both B0WI and WRST
1	Setting condition: When TCW overflows and an internal reset signal is generated

Bit 0 Write Inhibit

0	Bit 0 is write-enabled
1	Bit 0 is write-disabled

Watchdog Timer On

0	Watchdog timer operation is disabled Clearing conditions: Reset*2, or 0 is written in both B2WI and WDON while TCSRWE = 1
1	Watchdog timer operation is enabled Setting condition: 0 is written in B2WI and 1 is written in WDON while TCSRWE = 1

Bit 2 Write Inhibit

0	Bit 2 is write-enabled
1	Bit 2 is write-disabled

Timer Control/Status Register W Write Enable

0	Data cannot be written to bits 2 and 0
1	Data can be written to bits 2 and 0

Bit 4 Write Inhibit

0	Bit 4 is write-enabled
1	Bit 4 is write-disabled

Timer Counter W Write Enable

0	8-bit data cannot be written to TCW
1	8-bit data can be written to TCW

Bit 6 Write Inhibit

0	Bit 6 is write-enabled
1	Bit 6 is write-disabled

Notes: 1. Write is permitted only under certain conditions.
2. 1 on the H8/38124 Group.

TCW—Timer Counter W H'B3 Watchdog Timer

Bit	7	6	5	4	3	2	1	0
	TCW7	TCW6	TCW5	TCW4	TCW3	TCW2	TCW1	TCW0
Initial value	0	0	0	0	0	0	0	0
Read/Write	R/W	R/W	R/W	R/W	R/W	R/W	R/W	R/W

Count value

TMC—Timer Mode Register C H'B4 Timer C

Bit	7	6	5	4	3	2	1	0
	TMC7	TMC6	TMC5	—	—	TMC2	TMC1	TMC0
Initial value	0	0	0	1	1	0	0	0
Read/Write	R/W	R/W	R/W	—	—	R/W	R/W	R/W

Clock Select

0	0	0	Internal clock: ϕ/8192
		1	Internal clock: ϕ/2048
	1	0	Internal clock: ϕ/512
		1	Internal clock: ϕ/64
1	0	0	Internal clock: ϕ/16
		1	Internal clock: ϕ/4
	1	0	Internal clock: ϕ_W/4
		1	External event (TMIC): rising or falling edge

Counter Up/Down Control

0	0	TCC is an up-counter
0	1	TCC is a down-counter
1	*	Hardware control of TCC up/down operation by UD pin input UD pin input high: Down-counter UD pin input low: Up-counter

*: Don't care

Auto-Reload Function Select

0	Interval timer function selected
1	Auto-reload function selected

TCC—Timer Counter C H'B5 Timer C

Bit	7	6	5	4	3	2	1	0
	TCC7	TCC6	TCC5	TCC4	TCC3	TCC2	TCC1	TCC0
Initial value	0	0	0	0	0	0	0	0
Read/Write	R	R	R	R	R	R	R	R

Count value

Note: TCC is allocated to the same address as TLC. In a read, the TCC value is returned.

TLC—Timer Load Register C H'B5 Timer C

Bit	7	6	5	4	3	2	1	0
	TLC7	TLC6	TLC5	TLC4	TLC3	TLC2	TLC1	TLC0
Initial value	0	0	0	0	0	0	0	0
Read/Write	W	W	W	W	W	W	W	W

Reload value

Note: TLC is allocated to the same address as TCC. In a write, the value is written to TLC.

TCRF—Timer Control Register F H'B6 Timer F

Bit	7	6	5	4	3	2	1	0
	TOLH	CKSH2	CKSH1	CKSH0	TOLL	CKSL2	CKSL1	CKSL0
Initial value	0	0	0	0	0	0	0	0
Read/Write	W	W	W	W	W	W	W	W

Clock Select L

0	Except for 11		Counting on external event (TMIF) rising/falling edge
0	1	1	Do not specify this combination
1	0	0	Internal clock $\phi/32$
1	0	1	Internal clock $\phi/16$
1	1	0	Internal clock $\phi/4$
1	1	1	Internal clock $\phi_W/4$

Toggle Output Level L

0	Low level
1	High level

Clock Select H

0	Except for 11		16-bit mode, counting on TCFL overflow signal
0	1	1	Do not specify this combination
1	0	0	Internal clock $\phi/32$
1	0	1	Internal clock $\phi/16$
1	1	0	Internal clock $\phi/4$
1	1	1	Internal clock $\phi_W/4$

Toggle Output Level H

0	Low level
1	High level

TCSRF—Timer Control/Status Register F H'B7 Timer F

Bit	7	6	5	4	3	2	1	0
	OVFH	CMFH	OVIEH	CCLRH	OVFL	CMFL	OVIEL	CCLRL
Initial value	0	0	0	0	0	0	0	0
Read/Write	R/(W)*	R/(W)*	R/W	R/W	R/(W)*	R/(W)*	R/W	R/W

Counter Clear L

0	TCFL clearing by compare match is disabled
1	TCFL clearing by compare match is enabled

Timer Overflow Interrupt Enable L

0	TCFL overflow interrupt request is disabled
1	TCFL overflow interrupt request is enabled

Compare Match Flag L

0	Clearing condition: After reading CMFL = 1, cleared by writing 0 to CMFL
1	Setting condition: Set when the TCFL value matches the OCRFL value

Timer Overflow Flag L

0	Clearing condition: After reading OVFL = 1, cleared by writing 0 to OVFL
1	Setting condition: Set when TCFL overflows from H'FF to H'00

Counter Clear H

0	16-bit mode: TCF clearing by compare match is disabled 8-bit mode: TCFH clearing by compare match is disabled
1	16-bit mode: TCF clearing by compare match is enabled 8-bit mode: TCFH clearing by compare match is enabled

Timer Overflow Interrupt Enable H

0	TCFH overflow interrupt request is disabled
1	TCFH overflow interrupt request is enabled

Compare Match Flag H

0	Clearing condition: After reading CMFH = 1, cleared by writing 0 to CMFH
1	Setting condition: Set when the TCFH value matches the OCRFH value

Timer Overflow Flag H

0	Clearing condition: After reading OVFH = 1, cleared by writing 0 to OVFH
1	Setting condition: Set when TCFH overflows from H'FF to H'00

Note: * Bits 7, 6, 3, and 2 can only be written with 0, for flag clearing.

TCFH—8-Bit Timer Counter FH H'B8 Timer F

Bit	7	6	5	4	3	2	1	0
	TCFH7	TCFH6	TCFH5	TCFH4	TCFH3	TCFH2	TCFH1	TCFH0
Initial value	0	0	0	0	0	0	0	0
Read/Write	R/W	R/W	R/W	R/W	R/W	R/W	R/W	R/W

Count value

Note: TCFH and TCFL can also be used as the upper and lower halves, respectively, of a 16-bit timer counter (TCF).

TCFL—8-Bit Timer Counter FL H'B9 Timer F

Bit	7	6	5	4	3	2	1	0
	TCFL7	TCFL6	TCFL5	TCFL4	TCFL3	TCFL2	TCFL1	TCFL0
Initial value	0	0	0	0	0	0	0	0
Read/Write	R/W	R/W	R/W	R/W	R/W	R/W	R/W	R/W

Count value

Note: TCFH and TCFL can also be used as the upper and lower halves, respectively, of a 16-bit timer counter (TCF).

OCRFH—Output Compare Register FH H'BA Timer F

Bit	7	6	5	4	3	2	1	0
	OCRFH7	OCRFH6	OCRFH5	OCRFH4	OCRFH3	OCRFH2	OCRFH1	OCRFH0
Initial value	1	1	1	1	1	1	1	1
Read/Write	R/W	R/W	R/W	R/W	R/W	R/W	R/W	R/W

Note: OCRFH and OCRFL can also be used as the upper and lower halves, respectively, of a 16-bit output compare register (OCRF).

OCRFL—Output Compare Register FL **H'BB** **Timer F**

Bit	7	6	5	4	3	2	1	0
	OCRFL7	OCRFL6	OCRFL5	OCRFL4	OCRFL3	OCRFL2	OCRFL1	OCRFL0
Initial value	1	1	1	1	1	1	1	1
Read/Write	R/W	R/W	R/W	R/W	R/W	R/W	R/W	R/W

Note: OCRFH and OCRFL can also be used as the upper and lower halves, respectively, of a 16-bit output compare register (OCRF).

TMG—Timer Mode Register G H'BC Timer G

Bit	7	6	5	4	3	2	1	0
	OVFH	OVFL	OVIE	IIEGS	CCLR1	CCLR0	CKS1	CKS0
Initial value	0	0	0	0	0	0	0	0
Read/Write	R/(W)*	R/(W)*	R/W	R/W	R/W	R/W	R/W	R/W

Clock Select

0	0	Internal clock: counting on $\phi/64$
	1	Internal clock: counting on $\phi/32$
1	0	Internal clock: counting on $\phi/2$
	1	Internal clock: counting on $\phi_W/4$

Counter Clear

0	0	TCG clearing is disabled
	1	TCG cleared by falling edge of input capture input signal
1	0	TCG cleared by rising edge of input capture input signal
	1	TCG cleared by both edges of input capture input signal

Input Capture Interrupt Edge Select

0	Interrupt generated on rising edge of input capture input signal
1	Interrupt generated on falling edge of input capture input signal

Timer Overflow Interrupt Enable

0	TCG overflow interrupt request is disabled
1	TCG overflow interrupt request is enabled

Timer Overflow Flag L

0	Clearing condition: After reading OVFL = 1, cleared by writing 0 to OVFL
1	Setting condition: Set when TCG overflows from H'FF to H'00

Timer Overflow Flag H

0	Clearing condition: After reading OVFH = 1, cleared by writing 0 to OVFH
1	Setting condition: Set when TCG overflows from H'FF to H'00

Note: * Bits 7 and 6 can only be written with 0, for flag clearing.

ICRGF—Input Capture Register GF H'BD Timer G

Bit	7	6	5	4	3	2	1	0
	ICRGF7	ICRGF6	ICRGF5	ICRGF4	ICRGF3	ICRGF2	ICRGF1	ICRGF0
Initial value	0	0	0	0	0	0	0	0
Read/Write	R	R	R	R	R	R	R	R

Stores TCG value at falling edge of input capture signal

ICRGR—Input Capture Register GR H'BE Timer G

Bit	7	6	5	4	3	2	1	0
	ICRGR7	ICRGR6	ICRGR5	ICRGR4	ICRGR3	ICRGR2	ICRGR1	ICRGR0
Initial value	0	0	0	0	0	0	0	0
Read/Write	R	R	R	R	R	R	R	R

Stores TCG value at rising edge of input capture signal

LPCR—LCD Port Control Register H'C0 LCD Controller/Driver

Bit	7	6	5	4	3	2	1	0
	DTS1	DTS0	CMX	—	SGS3	SGS2	SGS1	SGS0
Initial value	0	0	0	—	0	0	0	0
Read/Write	R/W	R/W	R/W	W	R/W	R/W	R/W	R/W

Segment Driver Select

Bit 3	Bit 2	Bit 1	Bit 0	Function of Pins SEG_{32} to SEG_1								Note
SGS3	SGS2	SGS1	SGS0	SEG_{32} to SEG_{29}	SEG_{28} to SEG_{25}	SEG_{24} to SEG_{21}	SEG_{20} to SEG_{17}	SEG_{16} to SEG_{13}	SEG_{12} to SEG_9	SEG_8 to SEG_5	SEG_4 to SEG_1	
0	0	0	0	Port	Port	Port	Port	Port	Port	Port	Port	(Initial value)
			1	Port	Port	Port	Port	Port	Port	Port	SEG	
		1	0	Port	Port	Port	Port	Port	Port	SEG	SEG	
			1	Port	Port	Port	Port	Port	SEG	SEG	SEG	
	1	0	0	Port	Port	Port	Port	SEG	SEG	SEG	SEG	
			1	Port	Port	Port	SEG	SEG	SEG	SEG	SEG	
		1	0	Port	Port	SEG	SEG	SEG	SEG	SEG	SEG	
			1	Port	SEG	SEG	SEG	SEG	SEG	SEG	SEG	
1	0	0	0	SEG	SEG	SEG	SEG	SEG	SEG	SEG	SEG	
			1	SEG	SEG	SEG	SEG	SEG	SEG	SEG	Port	
		1	0	SEG	SEG	SEG	SEG	SEG	SEG	Port	Port	
			1	SEG	SEG	SEG	SEG	SEG	Port	Port	Port	
	1	0	0	SEG	SEG	SEG	SEG	Port	Port	Port	Port	
			1	SEG	SEG	SEG	Port	Port	Port	Port	Port	
		1	0	SEG	SEG	Port	Port	Port	Port	Port	Port	
			1	SEG	Port	Port	Port	Port	Port	Port	Port	

Duty Select, Common Function Select

Bit 7	Bit 6	Bit 5	Duty Cycle	Common Drivers	Notes
DTS1	DTS0	CMX			
0	0	0	Static	COM_1	Do not use COM_4 to COM_2
		1		COM_4 to COM_1	COM_4 to COM_2 output the same waveform as COM_1
0	1	0	1/2 duty	COM_2 to COM_1	Do not use COM_4 and COM_3
		1		COM_4 to COM_1	COM_4 outputs the same waveform as COM_3 and COM_2 outputs the same waveform as COM_1
1	0	0	1/3 duty	COM_3 to COM_1	Do not use COM_4
		1		COM_4 to COM_1	Do not use COM_4
1	1	0	1/4 duty	COM_4 to COM_1	—
		1			

LCR—LCD Control Register H'C1 LCD Controller/Driver

Bit	7	6	5	4	3	2	1	0
	—	PSW	ACT	DISP	CKS3	CKS2	CKS1	CKS0
Initial value	1	0	0	0	0	0	0	0
Read/Write	—	R/W	R/W	R/W	R/W	R/W	R/W	R/W

Frame Frequency Select

Bit 3	Bit 2	Bit 1	Bit 1	Operating Clock
CKS3	CKS2	CKS1	CKS0	
0	*	0	0	ϕ_W
0	*	0	1	$\phi_W/2$
0	*	1	*	$\phi_W/4$
1	0	0	0	$\phi/2$
1	0	0	1	$\phi/4$
1	0	1	0	$\phi/8$
1	0	1	1	$\phi/16$
1	1	0	0	$\phi/32$
1	1	0	1	$\phi/64$
1	1	1	0	$\phi/128$
1	1	1	1	$\phi/256$

*: Don't care

Display Data Control

0	Blank data is displayed
1	LCD RAM data is displayed

Display Function Activate

0	LCD controller/driver operation halted
1	LCD controller/driver operates

LCD Drive Power Supply On/Off Control

0	LCD drive power supply off
1	LCD drive power supply on

LCR2—LCD Control Register 2 H'C2 LCD

Bit	7	6	5	4	3	2	1	0
	LCDAB	—	—	—	CDS3	CDS2	CDS1	CDS0
Initial value	0	1	1	—	0	0	0	0
Read/Write	R/W	—	—	W	R/W	R/W	R/W	R/W

A Waveform/B Waveform Switching Control

0	Drive using A waveform
1	Drive using B waveform

Removal of Split-Resistance Control

CDS3	CDS2	CDS1	CDS0	Split-resistance condition
0	1	1	1	Split-resistance removed
Other than the above				Split-resistance connected

Note: The removal of split-resistance control is only implemented on the H8/38124 Group.

LVDCNT—Low-Voltage Detect Counter H'C3 Low-Voltage Detect Circuit

Note: This register is implemented on the H8/38124 Group only.

Bit	7	6	5	4	3	2	1	0
	CNT7	CNT6	CNT5	CNT4	CNT3	CNT2	CNT1	CNT0
Initial value	0	0	0	0	0	0	0	0
Read/Write	R	R	R	R	R	R	R	R

Count value

AMR—A/D Mode Register H'C6 A/D Converter

Bit	7	6	5	4	3	2	1	0
	CKS	TRGE	—	—	CH3	CH2	CH1	CH0
Initial value	0	0	1	1	0	0	0	0
Read/Write	R/W	R/W	—	—	R/W	R/W	R/W	R/W

Channel Select

Bit 3	Bit 2	Bit 1	Bit 0	
CH3	CH2	CH1	CH0	Analog Input Channel
0	0	*	*	No channel selected
	1	0	0	AN_0
			1	AN_1
		1	0	AN_2
			1	AN_3
1	0	0	0	AN_4
			1	AN_5
		1	0	AN_6
			1	AN_7
1	1	*	*	Do not specify this combination

*: Don't care

External Trigger Select

0	Disables start of A/D conversion by external trigger
1	Enables start of A/D conversion by rising or falling edge of external trigger at pin $\overline{\text{ADTRG}}$

Clock Select

Bit 7		Conversion Time		
CKS	Conversion Period	ϕ = 1 MHz	ϕ = 5 MHz	ϕ = 10 MHz*2
0	62/ϕ	62 μs	12.4 μs	6.2 μs
1	31/ϕ	31 μs	—*1	—*1

Notes: 1. Except for the H8/38124 Group, operation cannot be guaranteed if the conversion time is less than 12.4 μs. Make sure to select a setting that gives a conversion time of 12.4 μs or more in such cases. For the H8/38124 Group select a setting that gives a conversion time of 6.2 μs or more.
2. H8/38124 Group only.

ADRRH—A/D Result Register H **H'C4** **A/D Converter**
ADRRL—A/D Result Register L **H'C5**

ADRRH

Bit	7	6	5	4	3	2	1	0
	ADR9	ADR8	ADR7	ADR6	ADR5	ADR4	ADR3	ADR2
Initial value	Undefined	Undefined	Undefined	Undefined	Undefined	Undefined	Undefined	Undefined
Read/Write	R	R	R	R	R	R	R	R

A/D conversion result

ADRRL

Bit	7	6	5	4	3	2	1	0
	ADR1	ADR0	—	—	—	—	—	—
Initial value	Undefined	Undefined	—	—	—	—	—	—
Read/Write	R	R	—	—	—	—	—	—

A/D conversion result

ADSR—A/D Start Register **H'C7** **A/D Converter**

Bit	7	6	5	4	3	2	1	0
	ADSF	—	—	—	—	—	—	—
Initial value	0	1	1	1	1	1	1	1
Read/Write	R/W	—	—	—	—	—	—	—

A/D Start Flag

0	Read	Indicates completion of A/D conversion
	Write	Stops A/D conversion
1	Read	Indicates A/D conversion in progress
	Write	Starts A/D conversion

PMR1—Port Mode Register 1 H'C8 I/O Port

Bit	7	6	5	4	3	2	1	0
	IRQ3	—	—	IRQ4	TMIG	—	—	—
Initial value	0	1	—	0	0	—	1	—
Read/Write	R/W	—	W	R/W	R/W	W	—	W

$P1_3$/TMIG Pin Function Switch

0	Functions as $P1_3$ I/O pin
1	Functions as TMIG input pin

$P1_4$/$\overline{IRQ_4}$/$\overline{ADTRG}$ Pin Function Switch

0	Functions as $P1_4$ I/O pin
1	Functions as $\overline{IRQ_4}$/$\overline{ADTRG}$ input pin

$P1_7$/$\overline{IRQ_3}$/TMIF Pin Function Switch

0	Functions as $P1_7$ I/O pin
1	Functions as $\overline{IRQ_3}$/TMIF input pin

PMR2—Port Mode Register 2 **H'C9** **I/O Port**

Bit	7	6	5	4	3	2	1	0
	—	—	POF1	—	—	WDCKS	NCS	IRQ0
Initial value	1	1	0	1	1	0	0	0
Read/Write	—	—	R/W	—	—	R/W	R/W	R/W

$P4_3$/$\overline{IRQ0}$ Pin Function Switch

0	Functions as $P4_3$ I/O pin
1	Functions as $\overline{IRQ}_0$ input pin

TMIG Noise Canceller Select

0	Noise cancellation function not used
1	Noise cancellation function used

Watchdog Timer Switch

0	Selects ϕ8192*
1	Selects ϕ_W/32

$P3_5$ Pin Output Buffer PMOS On/Off Control

0	CMOS output
1	NMOS open-drain output

Note: * On the H8/38124 Group the clock source can be selected using the TMW register.

PMR3—Port Mode Register 3 **H'CA** **I/O Port**

Bit	7	6	5	4	3	2	1	0
	AEVL	AEVH	—	—	—	TMOFH	TMOFL	UD
Initial value	0	0	—	—	—	0	0	0
Read/Write	R/W	R/W	W	W	W	R/W	R/W	R/W

$P3_0$/UD Pin Function Switch

0	Functions as $P3_0$ I/O pin
1	Functions as UD input pin

$P3_1$/TMOFL Pin Function Switch

0	Functions as $P3_1$ I/O pin
1	Functions as TMOFL output pin

$P3_2$/TMOFH Pin Function Switch

0	Functions as $P3_2$ I/O pin
1	Functions as TMOFH output pin

$P3_6$/AEVH Pin Function Switch

0	Functions as $P3_6$ I/O pin
1	Functions as AEVH input pin

$P3_7$/AEVL Pin Function Switch

0	Functions as $P3_7$ I/O pin
1	Functions as AEVL input pin

PMR5—Port Mode Register 5 H'CC I/O Port

Bit	7	6	5	4	3	2	1	0
	WKP_7	WKP_6	WKP_5	WKP_4	WKP_3	WKP_2	WKP_1	WKP_0
Initial value	0	0	0	0	0	0	0	0
Read/Write	R/W	R/W	R/W	R/W	R/W	R/W	R/W	R/W

$P5_n/\overline{WKP}_n/SEG_{n+1}$ Pin Function Switch

0	Functions as $P5_n$ I/O pin
1	Functions as $\overline{WKP}_n$ input pin

(n = 7 to 0)

PWCR2—PWM2 Control Register H'CD 10-Bit PWM

Bit	7	6	5	4	3	2	1	0
	—	—	—	—	—	PWCR22	PWCR21	PWCR20
Initial value	1	1	1	1	1	0*2	0	0
Read/Write	—	—	—	—	—	R/W	W	W

Clock Select

0	0	The input clock is ϕ ($t\phi$*1 = 1/ϕ) The conversion period is 512/ϕ, with a minimum modulation width of 1/2ϕ
	1	The input clock is ϕ/2 ($t\phi$*1 = 2/ϕ) The conversion period is 1,024/ϕ, with a minimum modulation width of 1/ϕ
1	0	The input clock is ϕ/4 ($t\phi$*1 = 4/ϕ) The conversion period is 2,048/ϕ, with a minimum modulation width of 2/ϕ
	1	The input clock is ϕ/8 ($t\phi$*1 = 8/ϕ) The conversion period is 4,096/ϕ, with a minimum modulation width of 4/ϕ

PWH Output Select (H8/38124 Group only)

0	10-bit PWM
1	Event counter PWM

Notes: 1. $t\phi$: Period of PWM2 input clock
2. 1 on products other than the H8/38124 Group

PWDRU2—PWM2 Data Register U H'CE 10-Bit PWM

Bit	7	6	5	4	3	2	1	0
	—	—	—	—	—	—	PWDRU21	PWDRU20
Initial value	1	1	1	1	1	1	0	0
Read/Write	—	—	—	—	—	—	W	W

Upper 2 bits of PWM2 waveform generation data

PWDRL2—PWM2 Data Register L H'CF 10-Bit PWM

Bit	7	6	5	4	3	2	1	0
	PWDRL27	PWDRL26	PWDRL25	PWDRL24	PWDRL23	PWDRL22	PWDRL21	PWDRL20
Initial value	0	0	0	0	0	0	0	0
Read/Write	W	W	W	W	W	W	W	W

Lower 8 bits of PWM2 waveform generation data

PWCR1—PWM1 Control Register H'D0 10-Bit PWM

Bit	7	6	5	4	3	2	1	0
	—	—	—	—	—	PWCR12	PWCR11	PWCR10
Initial value	1	1	1	1	1	0*2	0	0
Read/Write	—	—	—	—	—	R/W	W	W

Clock Select

0	The input clock is ϕ ($t\phi$*1 = 1/ϕ) The conversion period is 512/ϕ, with a minimum modulation width of 1/2ϕ
	The input clock is ϕ/2 ($t\phi$*1 = 2/ϕ) The conversion period is 1,024/ϕ, with a minimum modulation width of 1/ϕ
1	The input clock is ϕ/4 ($t\phi$*1 = 4/ϕ) The conversion period is 2,048/ϕ, with a minimum modulation width of 2/ϕ
	The input clock is ϕ/8 ($t\phi$*1 = 8/ϕ) The conversion period is 4,096/ϕ, with a minimum modulation width of 4/ϕ

PWH Output Select (H8/38124 Group only)

0	10-bit PWM
1	Event counter PWM

Notes: 1. $t\phi$: Period of PWM1 input clock

2. 1 on products other than the H8/38124 Group

PWDRU1—PWM1 Data Register U H'D1 10-Bit PWM

Bit	7	6	5	4	3	2	1	0
	—	—	—	—	—	—	PWDRU11	PWDRU10
Initial value	1	1	1	1	1	1	0	0
Read/Write	—	—	—	—	—	—	W	W

Upper 2 bits of data for generating PWM1 waveform

PWDRL1—PWM1 Data Register L H'D2 10-Bit PWM

Bit	7	6	5	4	3	2	1	0
	PWDRL17	PWDRL16	PWDRL15	PWDRL14	PWDRL13	PWDRL12	PWDRL11	PWDRL10
Initial value	0	0	0	0	0	0	0	0
Read/Write	W	W	W	W	W	W	W	W

Lower 8 bits of data for generating PWM1 waveform

PDR1—Port Data Register 1 H'D4 I/O Ports

Bit	7	6	5	4	3	2	1	0
	$P1_7$	$P1_6$*	—	$P1_4$	$P1_3$	—	—	—
Initial value	0	0	—	0	0	—	—	—
Read/Write	R/W	R/W	—	R/W	R/W	—	—	—

Data for port 1 pins

Note: * $P1_6$ is not equipped with H8/38124 Group.

PDR3—Port Data Register 3 H'D6 I/O Ports

Bit	7	6	5	4	3	2	1	0
	$P3_7$	$P3_6$	$P3_5$	$P3_4$	$P3_3$	$P3_2$	$P3_1$	$P3_0$
Initial value	0	0	0	0	0	0	0	0
Read/Write	R/W	R/W	R/W	R/W	R/W	R/W	R/W	R/W

Data for port 3 pins

PDR4—Port Data Register 4 **H'D7** **I/O Ports**

Bit	7	6	5	4	3	2	1	0
	—	—	—	—	$P4_3$	$P4_2$	$P4_1$	$P4_0$
Initial value	1	1	1	1	1	0	0	0
Read/Write	—	—	—	—	R	R/W	R/W	R/W

Reads $P4_3$ state

Data for port 4 pins

PDR5—Port Data Register 5 **H'D8** **I/O Ports**

Bit	7	6	5	4	3	2	1	0
	$P5_7$	$P5_6$	$P5_5$	$P5_4$	$P5_3$	$P5_2$	$P5_1$	$P5_0$
Initial value	0	0	0	0	0	0	0	0
Read/Write	R/W	R/W	R/W	R/W	R/W	R/W	R/W	R/W

Data for port 5 pins

PDR6—Port Data Register 6 **H'D9** **I/O Ports**

Bit	7	6	5	4	3	2	1	0
	$P6_7$	$P6_6$	$P6_5$	$P6_4$	$P6_3$	$P6_2$	$P6_1$	$P6_0$
Initial value	0	0	0	0	0	0	0	0
Read/Write	R/W	R/W	R/W	R/W	R/W	R/W	R/W	R/W

Data for port 6 pins

PDR7—Port Data Register 7 **H'DA** **I/O Ports**

Bit	7	6	5	4	3	2	1	0
	$P7_7$	$P7_6$	$P7_5$	$P7_4$	$P7_3$	$P7_2$	$P7_1$	$P7_0$
Initial value	0	0	0	0	0	0	0	0
Read/Write	R/W	R/W	R/W	R/W	R/W	R/W	R/W	R/W

Data for port 7 pins

PDR8—Port Data Register 8 **H'DB** **I/O Ports**

Bit	7	6	5	4	3	2	1	0
	$P8_7$	$P8_6$	$P8_5$	$P8_4$	$P8_3$	$P8_2$	$P8_1$	$P8_0$
Initial value	0	0	0	0	0	0	0	0
Read/Write	R/W	R/W	R/W	R/W	R/W	R/W	R/W	R/W

Data for port 8 pins

PDR9—Port Data Register 9 **H'DC** **I/O Ports**

Bit	7	6	5	4	3	2	1	0
	—	—	$P9_5$	$P9_4$	$P9_3$	$P9_2$	$P9_1$	$P9_0$
Initial value	1	1	1	1	1	1	1	1
Read/Write	—	—	R/W	R/W	R/W	R/W	R/W	R/W

Data for port 9 pins

PDRA—Port Data Register A **H'DD** **I/O Ports**

Bit	7	6	5	4	3	2	1	0
	—	—	—	—	PA_3	PA_2	PA_1	PA_0
Initial value	1	1	1	1	0	0	0	0
Read/Write	—	—	—	—	R/W	R/W	R/W	R/W

Data for port A pins

PDRB—Port Data Register B **H'DE** **I/O Ports**

Bit	7	6	5	4	3	2	1	0
	PB_7	PB_6	PB_5	PB_4	PB_3	PB_2	PB_1	PB_0
Read/Write	R	R	R	R	R	R	R	R

Read port B pin states

PUCR1—Port Pull-Up Control Register 1 H'E0 I/O Ports

Bit	7	6	5	4	3	2	1	0
	$PUCR1_7$	$PUCR1_6$*	—	$PUCR1_4$	$PUCR1_3$	—	—	—
Initial value	0	0	—	0	0	—	—	—
Read/Write	R/W	R/W	W	R/W	R/W	W	W	W

Port 1 Input Pull-up MOS Control

0	Input pull-up MOS is off
1	Input pull-up MOS is on

Note: When the PCR1 specification is 0. (Input port specification)

Note: * $PUCR1_6$ is not equipped with H8/38124 Group.

PUCR3—Port Pull-Up Control Register 3 H'E1 I/O Ports

Bit	7	6	5	4	3	2	1	0
	$PUCR3_7$	$PUCR3_6$	$PUCR3_5$	$PUCR3_4$	$PUCR3_3$	$PUCR3_2$	$PUCR3_1$	$PUCR3_0$
Initial value	0	0	0	0	0	0	0	0
Read/Write	R/W	R/W	R/W	R/W	R/W	R/W	R/W	R/W

Port 3 Input Pull-up MOS Control

0	Input pull-up MOS is off
1	Input pull-up MOS is on

Note: When the PCR3 specification is 0. (Input port specification)

PUCR5—Port Pull-Up Control Register 5 H'E2 I/O Ports

Bit	7	6	5	4	3	2	1	0
	$PUCR5_7$	$PUCR5_6$	$PUCR5_5$	$PUCR5_4$	$PUCR5_3$	$PUCR5_2$	$PUCR5_1$	$PUCR5_0$
Initial value	0	0	0	0	0	0	0	0
Read/Write	R/W	R/W	R/W	R/W	R/W	R/W	R/W	R/W

Port 5 Input Pull-up MOS Control

0	Input pull-up MOS is off
1	Input pull-up MOS is on

Note: When the PCR5 specification is 0. (Input port specification)

PUCR6—Port Pull-Up Control Register 6 H'E3 I/O Ports

Bit	7	6	5	4	3	2	1	0
	$PUCR6_7$	$PUCR6_6$	$PUCR6_5$	$PUCR6_4$	$PUCR6_3$	$PUCR6_2$	$PUCR6_1$	$PUCR6_0$
Initial value	0	0	0	0	0	0	0	0
Read/Write	R/W	R/W	R/W	R/W	R/W	R/W	R/W	R/W

Port 6 Input Pull-up MOS Control

0	Input pull-up MOS is off
1	Input pull-up MOS is on

Note: When the PCR6 specification is 0. (Input port specification)

PCR1—Port Control Register 1 H'E4 I/O Ports

Bit	7	6	5	4	3	2	1	0
	$PCR1_7$	$PCR1_6$*	—	$PCR1_4$	$PCR1_3$	—	—	—
Initial value	0	0	—	0	0	—	—	—
Read/Write	W	W	W	W	W	W	W	W

Port 1 Input/Output Select

0	Input pin
1	Output pin

Note: * $PCR1_6$ is not equipped with H8/38124 Group.

PCR3—Port Control Register 3 H'E6 I/O Ports

Bit	7	6	5	4	3	2	1	0
	$PCR3_7$	$PCR3_6$	$PCR3_5$	$PCR3_4$	$PCR3_3$	$PCR3_2$	$PCR3_1$	$PCR3_0$
Initial value	0	0	0	0	0	0	0	0
Read/Write	W	W	W	W	W	W	W	W

Port 3 Input/Output Select

0	Input pin
1	Output pin

PCR4—Port Control Register 4 H'E7 I/O Ports

Bit	7	6	5	4	3	2	1	0
	—	—	—	—	—	$PCR4_2$	$PCR4_1$	$PCR4_0$
Initial value	1	1	1	1	1	0	0	0
Read/Write	—	—	—	—	—	W	W	W

Port 4 Input/Output Select

0	Input pin
1	Output pin

PCR5—Port Control Register 5 H'E8 I/O Ports

Bit	7	6	5	4	3	2	1	0
	$PCR5_7$	$PCR5_6$	$PCR5_5$	$PCR5_4$	$PCR5_3$	$PCR5_2$	$PCR5_1$	$PCR5_0$
Initial value	0	0	0	0	0	0	0	0
Read/Write	W	W	W	W	W	W	W	W

Port 5 Input/Output Select

0	Input pin
1	Output pin

PCR6—Port Control Register 6 H'E9 I/O Ports

Bit	7	6	5	4	3	2	1	0
	$PCR6_7$	$PCR6_6$	$PCR6_5$	$PCR6_4$	$PCR6_3$	$PCR6_2$	$PCR6_1$	$PCR6_0$
Initial value	0	0	0	0	0	0	0	0
Read/Write	W	W	W	W	W	W	W	W

Port 6 Input/Output Select

0	Input pin
1	Output pin

PCR7—Port Control Register 7 H'EA I/O Ports

Bit	7	6	5	4	3	2	1	0
	$PCR7_7$	$PCR7_6$	$PCR7_5$	$PCR7_4$	$PCR7_3$	$PCR7_2$	$PCR7_1$	$PCR7_0$
Initial value	0	0	0	0	0	0	0	0
Read/Write	W	W	W	W	W	W	W	W

Port 7 Input/Output Select

0	Input pin
1	Output pin

PCR8—Port Control Register 8 H'EB I/O Ports

Bit	7	6	5	4	3	2	1	0
	$PCR8_7$	$PCR8_6$	$PCR8_5$	$PCR8_4$	$PCR8_3$	$PCR8_2$	$PCR8_1$	$PCR8_0$
Initial value	0	0	0	0	0	0	0	0
Read/Write	W	W	W	W	W	W	W	W

Port 8 Input/Output Select

0	Input pin
1	Output pin

PMR9—Port Mode Register 9 H'EC I/O Ports

Bit	7	6	5	4	3	2	1	0
	—	—	—	—	PIOFF/—*	—	PWM2	PWM1
Initial value	1	1	1	1	0	—	0	0
Read/Write	—	—	—	—	R/W	W	R/W	R/W

P90/PWM1 Pin Function Switch

0	Functions as P90 output pin
1	Functions as PWM1 output pin

P91/PWM2 Pin Function Switch

0	Functions as P91 output pin
1	Functions as PWM2 output pin

P92 to P90 Step-up Circuit Control

0	Large-current port step-up circuit is turned on
1	Large-current port step-up circuit is turned off

Note: * Readable/writable reserved bit in the H8/38024S Group and H8/38124 Group.

PCRA—Port Control Register A H'ED I/O Ports

Bit	7	6	5	4	3	2	1	0
	—	—	—	—	$PCRA_3$	$PCRA_2$	$PCRA_1$	$PCRA_0$
Initial value	1	1	1	1	0	0	0	0
Read/Write	—	—	—	—	W	W	W	W

Port A Input/Output Select

0	Input pin
1	Output pin

PMRB—Port Mode Register B H'EE I/O Ports

Bit	7	6	5	4	3	2	1	0
	—	—	—	—	IRQ1	—	—	—
Initial value	1	1	1	1	0	1	1	1
Read/Write	—	—	—	—	R/W	—	—	—

$PB_3/AN_3/\overline{IRQ}_1$ Pin Function Switch

0	Functions as PB_3/AN_3 input pin
1	Functions as $\overline{IRQ}_1$ input pin

SYSCR1—System Control Register 1 H'F0 System Control

Bit	7	6	5	4	3	2	1	0
	SSBY	STS2	STS1	STS0	LSON	—	MA1	MA0
Initial value	0	0	0	0	0	1	1	1
Read/Write	R/W	R/W	R/W	R/W	R/W	—	R/W	R/W

Active (medium-speed) Mode Clock Select

0	0	$\phi_{osc}/16$
	1	$\phi_{osc}/32$
1	0	$\phi_{osc}/64$
	1	$\phi_{osc}/128$

Low Speed on Flag

0	The CPU operates on the system clock (ϕ)
1	The CPU operates on the subclock (ϕ_{SUB})

Standby Timer Select 2 to 0

0	0	0	Wait time = 8,192 states*1	Wait time = 8,192 states*2
		1	Wait time = 16,384 states*1	Wait time = 16,384 states*2
	1	0	Wait time = 1,024 states*1	Wait time = 32,768 states*2
		1	Wait time = 2,048 states*1	Wait time = 65,536 states*2
1	0	0	Wait time = 4,096 states*1	Wait time = 131,072 states*2
		1	Wait time = 2 states*1	Wait time = 2 states*2
	1	0	Wait time = 8 states*1	Wait time = 8 states*2
		1	Wait time = 16 states*1	Wait time = 16 states*2

Software Standby

0	• When a SLEEP instruction is executed in active mode, a transition is made to sleep mode • When a SLEEP instruction is executed in subactive mode, a transition is made to subsleep mode
1	• When a SLEEP instruction is executed in active mode, a transition is made to standby mode or watch mode • When a SLEEP instruction is executed in subactive mode, a transition is made to watch mode

Notes: 1. Applies to products other than the H8/38124 Group.
2. Applies to the H8/38124 Group.

SYSCR2—System Control Register 2 H'F1 System Control

Bit	7	6	5	4	3	2	1	0
	—	—	—	NESEL	DTON	MSON	SA1	SA0
Initial value	1	1	1	1	0	0	0	0
Read/Write	—	—	—	R/W	R/W	R/W	R/W	R/W

Subactive Mode Clock Select

0	0	$\phi_W/8$
	1	$\phi_W/4$
1	*	$\phi_W/2$

*: Don't care

Medium Speed on Flag

0	Operates in active (high-speed) mode
1	Operates in active (medium-speed) mode

Direct Transfer on Flag

0	• When a SLEEP instruction is executed in active mode, a transition is made to standby mode, watch mode, or sleep mode • When a SLEEP instruction is executed in subactive mode, a transition is made to watch mode or subsleep mode
1	• When a SLEEP instruction is executed in active (high-speed) mode, a direct transition is made to active (medium-speed) mode if SSBY = 0, MSON = 1, and LSON = 0, or to subactive mode if SSBY = 1, TMA3 = 1, and LSON = 1 • When a SLEEP instruction is executed in active (medium-speed) mode, a direct transition is made to active (high-speed) mode if SSBY = 0, MSON = 0, and LSON = 0, or to subactive mode if SSBY = 1, TMA3 = 1, and LSON = 1 • When a SLEEP instruction is executed in subactive mode, a direct transition is made to active (high-speed) mode if SSBY = 1, TMA3 = 1, LSON = 0, and MSON = 0, or to active (medium-speed) mode if SSBY = 1, TMA3 = 1, LSON = 0, and MSON = 1

Noise Elimination Sampling Frequency Select

0	Sampling rate is $\phi_{OSC}/16$
1	Sampling rate is $\phi_{OSC}/4$

IEGR—IRQ Edge Select Register H'F2 System Control

Bit	7	6	5	4	3	2	1	0
	—	—	—	IEG4	IEG3	—	IEG1	IEG0
Initial value	1	1	1	0	0	—	0	0
Read/Write	—	—	—	R/W	R/W	W	R/W	R/W

IRQ_0 Edge Select

0	Falling edge of $\overline{IRQ_0}$ pin input is detected
1	Rising edge of $\overline{IRQ_0}$ pin input is detected

IRQ_1 Edge Select

0	Falling edge of $\overline{IRQ_1}$, TMIC pin input is detected
1	Rising edge of $\overline{IRQ_1}$, TMIC pin input is detected

IRQ_3 Edge Select

0	Falling edge of $\overline{IRQ_3}$, TMIF pin input is detected
1	Rising edge of $\overline{IRQ_3}$, TMIF pin input is detected

IRQ_4 Edge Select

0	Falling edge of $\overline{IRQ_4}$, $\overline{ADTRG}$ pin input is detected
1	Rising edge of $\overline{IRQ_4}$, $\overline{ADTRG}$ pin input is detected

IENR1—Interrupt Enable Register 1 H'F3 System Control

Bit	7	6	5	4	3	2	1	0
	IENTA	—	IENWP	IEN4	IEN3	IENEC2	IEN1	IEN0
Initial value	0	—	0	0	0	0	0	0
Read/Write	R/W	W	R/W	R/W	R/W	R/W	R/W	R/W

$\overline{IRQ_1}$ to $\overline{IRQ_0}$ Interrupt Enable

0	Disables $\overline{IRQ_1}$ to $\overline{IRQ_0}$ interrupt, requests
1	Enables $\overline{IRQ_1}$ to $\overline{IRQ_0}$ interrupt requests

IRQAEC Interrupt Enable

0	Disables IRQAEC interrupt requests
1	Enables IRQAEC interrupt requests

IRQ_4 and IRQ_3 Interrupt Enable

0	Disables $\overline{IRQ_4}$ and $\overline{IRQ_3}$ interrupt requests
1	Enables $\overline{IRQ_4}$ and $\overline{IRQ_3}$ interrupt requests

Wakeup Interrupt Enable

0	Disables $\overline{WKP_7}$ to $\overline{WKP_0}$ interrupt requests
1	Enables $\overline{WKP_7}$ to $\overline{WKP_0}$ interrupt requests

Timer A Interrupt Enable

0	Disables timer A interrupt requests
1	Enables timer A interrupt requests

IENR2—Interrupt Enable Register 2 H'F4 System Control

Bit	7	6	5	4	3	2	1	0
	IENDT	IENAD	—	IENTG	IENTFH	IENTFL	IENTC	IENEC
Initial value	0	0	—	0	0	0	0	0
Read/Write	R/W	R/W	W	R/W	R/W	R/W	R/W	R/W

Asynchronous Event Counter Interrupt Enable

0	Disables asynchronous event counter interrupt requests
1	Enables asynchronous event counter interrupt requests

Timer C Interrupt Enable

0	Disables timer C interrupt requests
1	Enables timer C interrupt requests

Timer FL Interrupt Enable

0	Disables timer FL interrupt requests
1	Enables timer FL interrupt requests

Timer FH Interrupt Enable

0	Disables timer FH interrupt requests
1	Enables timer FH interrupt requests

Timer G Interrupt Enable

0	Disables timer G interrupt requests
1	Enables timer G interrupt requests

A/D Converter Interrupt Enable

0	Disables A/D converter interrupt requests
1	Enables A/D converter interrupt requests

Direct Transition Interrupt Enable

0	Disables direct transition interrupt requests
1	Enables direct transition interrupt requests

OSCCR—Clock Pulse Generator Control Register H'F5 Clock Pulse Generator

Note: This register is implemented on the H8/38124 Group only.

Bit	7	6	5	4	3	2	1	0
	SUBSTP	—	—	—	—	IRQAECF	OSCF	—
Initial value	0	0	0	0	0	—	—	0
Read/Write	R/W	R	R/W	R/W	R/W	R	R	R/W

OSC Flag

0	Operation using system clock oscillator (on-chip oscillator stopped)
1	Operation using on-chip oscillator (system clock oscillator stopped)

IRQAEC Flag

0	IRQAEC pin set to GND during resets
1	IRQAEC pin set to VCC during resets

Subclock Oscillator Stop Control

0	Subclock oscillator operating (initial value)
1	Subclock oscillator stopped

IRR1—Interrupt Request Register 1 H'F6 System Control

Bit	7	6	5	4	3	2	1	0
	IRRTA	—	—	IRRI4	IRRI3	IRREC2	IRRI1	IRRI0
Initial value	0	—	1	0	0	0	0	0
Read/Write	R/(W)*	W	—	R/(W)*	R/(W)*	R/(W)*	R/(W)*	R/(W)*

IRQ1 and IRQ0 Interrupt Request Flags

0	Clearing condition: When IRRIn = 1, it is cleared by writing 0
1	Setting condition: When pin $\overline{\text{IRQn}}$ is designated for interrupt input and the designated signal edge is input

(n = 1 or 0)

IRQAEC Interrupt Request Flag

0	Clearing condition: When IRREC2 = 1, it is cleared by writing 0
1	Setting condition: When pin IRQAEC is designated for interrupt input and the designated signal edge is input

IRQ4 and IRQ3 Interrupt Request Flags

0	Clearing condition: When IRRIm = 1, it is cleared by writting 0
1	Setting condition: When pin $\overline{\text{IRQm}}$ is designated for interrupt input and the designated signal edge is input

(m = 4 or 3)

Timer A Interrupt Request Flag

0	Clearing condition: When IRRTA = 1, it is cleared by writing 0
1	Setting condition: When the timer A counter value overflows (from H'FF to H'00)

Note: * Bits 7 and 4 to 0 can only be written with 0, for flag clearing.

IRR2—Interrupt Request Register 2 H'F7 System Control

Bit	7	6	5	4	3	2	1	0
	IRRDT	IRRAD	—	IRRTG	IRRTFH	IRRTFL	IRRTC	IRREC
Initial value	0	0	—	0	0	0	0	0
Read/Write	R/(W)*	R/(W)*	W	R/(W)*	R/(W)*	R/(W)*	R/(W)*	R/(W)*

Asynchronous Event Counter Interrupt Request Flag

0	Clearing condition: When IRREC = 1, it is cleared by writing 0
1	Setting condition: When the asynchronous event counter value overflows

Timer C Interrupt Request Flag

0	Clearing condition: When IRRTC = 1, it is cleared by writing 0
1	Setting condition: When the timer C counter value overflows (from H'FF to H'00) or underflows (from H'00 to H'FF)

Timer FL Interrupt Request Flag

0	Clearing condition: When IRRTFL = 1, it is cleared by writing 0
1	Setting condition: When counter FL and output compare register FL match in 8-bit timer mode

Timer FH Interrupt Request Flag

0	Clearing condition: When IRRTFH = 1, it is cleared by writing 0
1	Setting conditions: When counter FH and output compare register FH match in 8-bit timer mode, or when 16-bit counters FL and FH and output compare registers FL and FH match in 16-bit timer mode

Timer G Interrupt Request Flag

0	Clearing condition: When IRRTG = 1, it is cleared by writing 0
1	Setting conditions: When the TMIG pin is designated for TMIG input and the designated signal edge is input, and when TCG overflows while OVIE is set to 1 in TMG

A/D Converter Interrupt Request Flag

0	Clearing condition: When IRRAD = 1, it is cleared by writing 0
1	Setting condition: When the A/D converter completes conversion and ADSF is reset

Direct Transition Interrupt Request Flag

0	Clearing condition: When IRRDT = 1, it is cleared by writing 0
1	Setting condition: When a SLEEP instruction is executed while DTON is set to 1, and a direct transition is made

Note: * Bits 7, 6, and 4 to 0 can only be written with 0, for flag clearing.

TMW—Timer Mode Register W **H'F8** **Watchdog Timer**

Note: This register is implemented on the H8/38124 Group only.

Bit	7	6	5	4	3	2	1	0
	—	—	—	—	CKS3	CKS2	CKS1	CKS0
Initial value	1	1	1	1	1	1	1	1
Read/Write	—	—	—	—	R/W	R/W	R/W	R/W

Internal Clock Select

CDS3	CDS2	CDS1	CDS0	Clock source
1	0	0	0	ϕ/64
1	0	0	1	ϕ/128
1	0	1	0	ϕ/256
1	0	1	1	ϕ/512
1	1	0	0	ϕ/1024
1	1	0	1	ϕ/2048
1	1	1	0	ϕ/4096
1	1	1	1	ϕ/8192
0	*	*	*	On-chip oscillator

Note: Valid when WDCKS bit in PMR2 register is cleared to 0.

IWPR—Wakeup Interrupt Request Register H'F9 System Control

Bit	7	6	5	4	3	2	1	0
	IWPF7	IWPF6	IWPF5	IWPF4	IWPF3	IWPF2	IWPF1	IWPF0
Initial value	0	0	0	0	0	0	0	0
Read/Write	R/(W)*	R/(W)*	R/(W)*	R/(W)*	R/(W)*	R/(W)*	R/(W)*	R/(W)*

Wakeup Interrupt Request Register

0	Clearing condition: When IWPFn = 1, it is cleared by writing 0
1	Setting condition: When pin $\overline{\text{WKPn}}$ is designated for wakeup input and a falling edge is input at that pin

(n = 7 to 0)

Note: * All bits can only be written with 0, for flag clearing.

CKSTPR1—Clock Stop Register 1 H'FA System Control

Bit	7	6	5	4	3	2	1	0
	—	—	S32CKSTP	ADCKSTP	TGCKSTP	TFCKSTP	TCCKSTP	TACKSTP
Initial value	1	1	1	1	1	1	1	1
Read/Write	—	—	R/W	R/W	R/W	R/W	R/W	R/W

Timer A Module Standby Mode Control

0	Timer A is set to module standby mode
1	Timer A module standby mode is cleared

Timer C Module Standby Mode Control

0	Timer C is set to module standby mode
1	Timer C module standby mode is cleared

Timer F Module Standby Mode Control

0	Timer F is set to module standby mode
1	Timer F module standby mode is cleared

Timer G Module Standby Mode Control

0	Timer G is set to module standby mode
1	Timer G module standby mode is cleared

A/D Converter Module Standby Mode Control

0	A/D converter is set to module standby mode
1	A/D converter module standby mode is cleared

SCI3 Module Standby Mode Control

0	SCI3 is set to module standby mode
1	SCI3 module standby mode is cleared

CKSTPR2—Clock Stop Register 2 H'FB System Control

Bit	7	6	5	4	3	2	1	0
	LVDCKSTP*	—	—	PW2CKSTP	AECKSTP	WDCKSTP	PW1CKSTP	LDCKSTP
Initial value	1	1	1	1	1	1	1	1
Read/Write	R/W	—	—	R/W	R/W	R/W	R/W	R/W

LCD Module Standby Mode Control

0	LCD is set to module standby mode
1	LCD module standby mode is cleared

PWM1 Module Standby Mode Control

0	PWM1 is set to module standby mode
1	PWM1 module standby mode is cleared

WDT Module Standby Mode Control

0	WDT is set to module standby mode
1	WDT module standby mode is cleared

Asynchronous Event Counter Module Standby Mode Control

0	Asynchronous event counter is set to module standby mode
1	Asynchronous event counter module standby mode is cleared

PWM2 Module Standby Mode Control

0	PWM2 is set to module standby mode
1	PWM2 module standby mode is cleared

LVD Module Standby Mode Control

0	LVD is set to module standby mode
1	LVD module standby mode is cleared

Note: * Control using the LVDCKST bit is implemented on the H8/38124 Group only.

Appendix C I/O Port Block Diagrams

C.1 Block Diagrams of Port 1

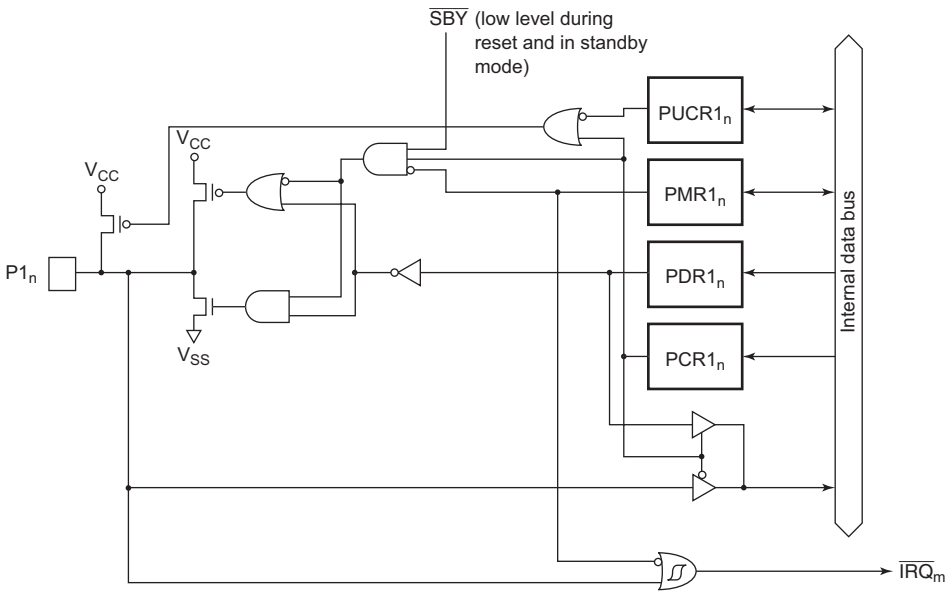

PDR1: Port data register 1
PCR1: Port control register 1
PMR1: Port mode register 1
PUCR1: Port pull-up control register 1
n = 7 and 4
m = 4 and 3

Figure C.1(a) Port 1 Block Diagram (Pins $P1_7$ and $P1_4$)

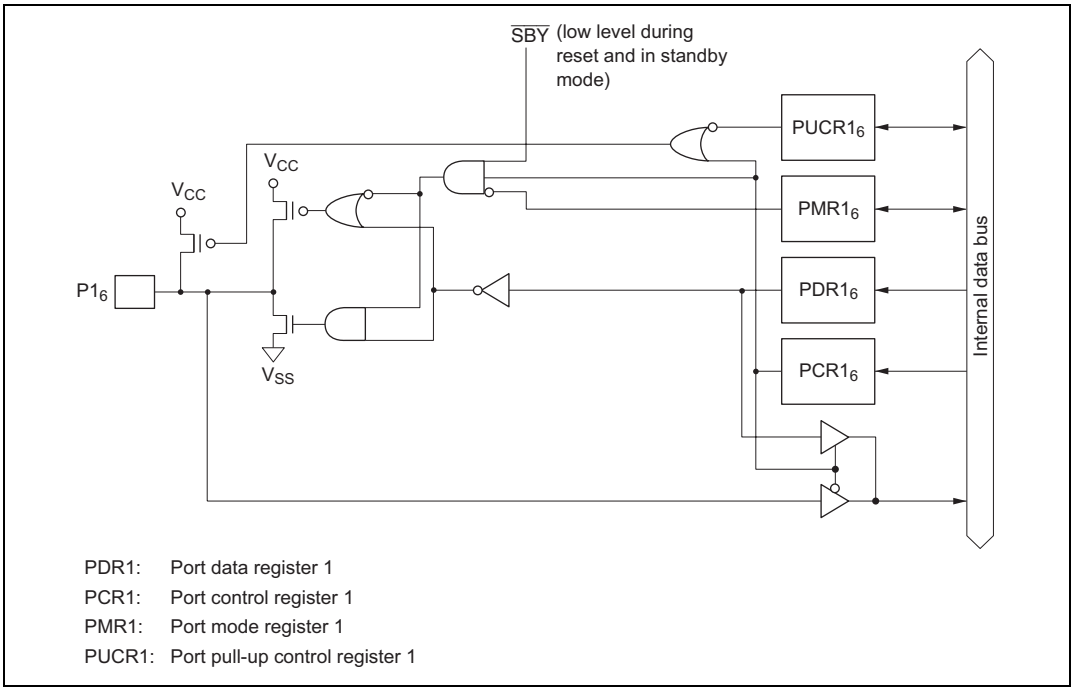

Figure C.1(b) Port 1 Block Diagram (Pin P1$_6$, Products other than H8/38124 Group)

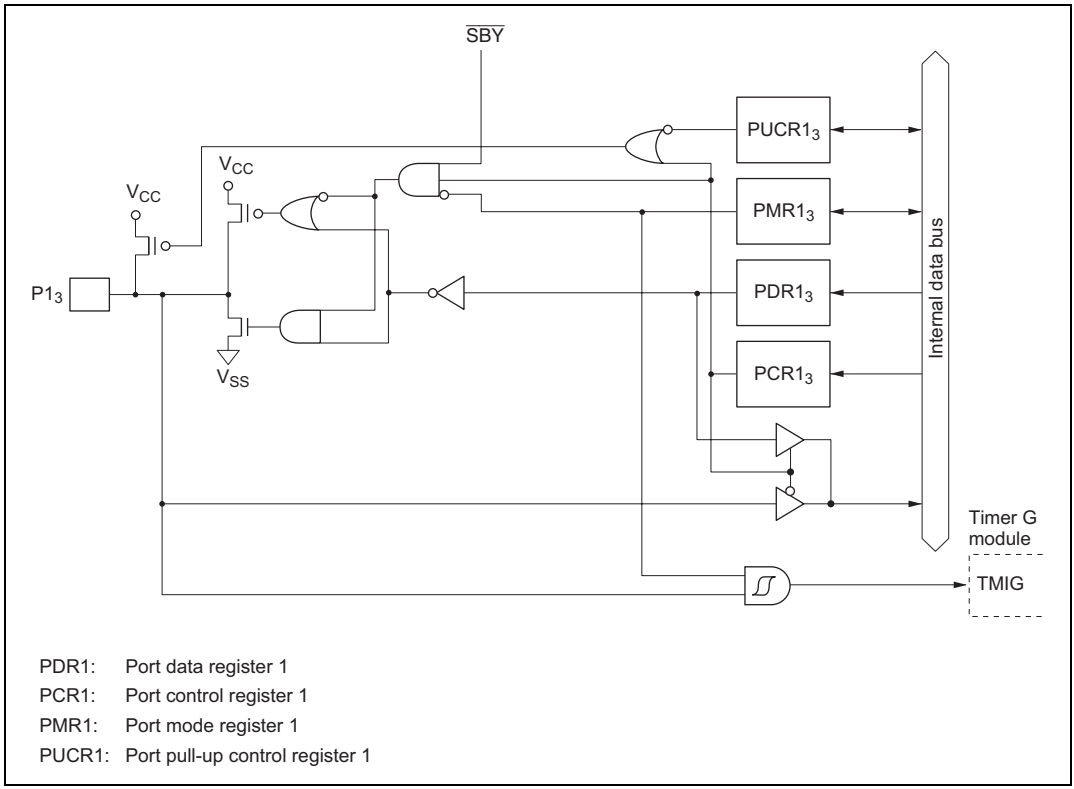

Figure C.1(c) Port 1 Block Diagram (Pin $P1_3$)

C.2 Block Diagrams of Port 3

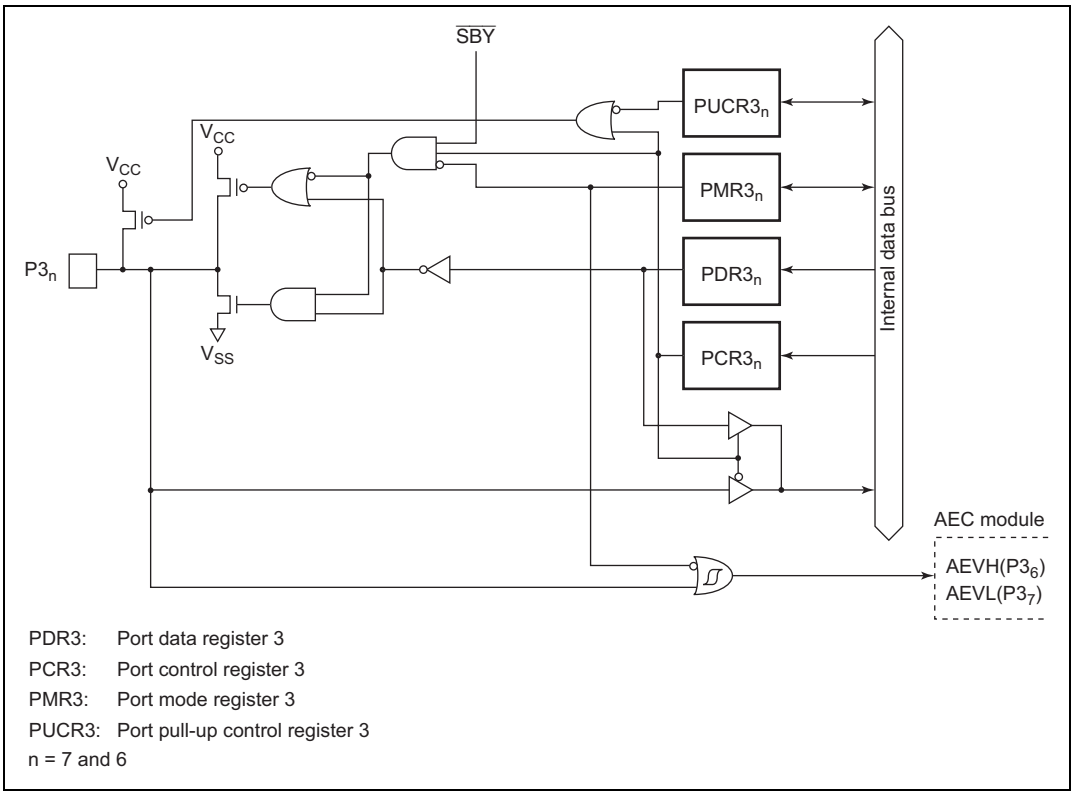

Figure C.2(a) Port 3 Block Diagram (Pins $P3_7$ and $P3_6$)

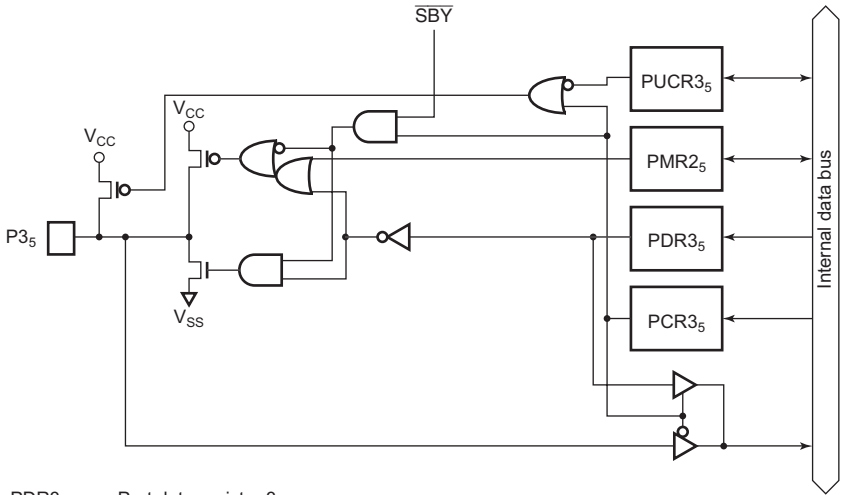

PDR3: Port data register 3
PCR3: Port control register 3
PUCR3: Port pull-up control register 3
PMR2 Port mode register 2

Figure C.2(b) Port 3 Block Diagram (Pin $P3_5$)

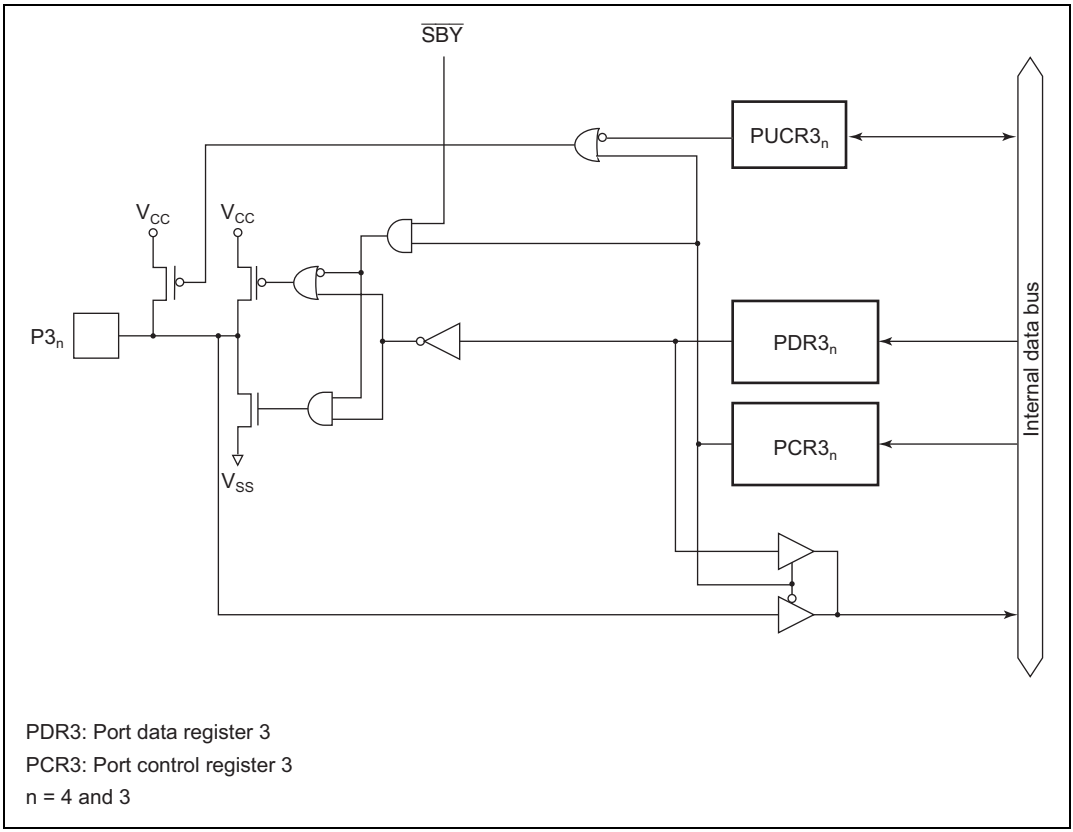

Figure C.2(c) Port 3 Block Diagram (Pins $P3_4$ and $P3_3$)

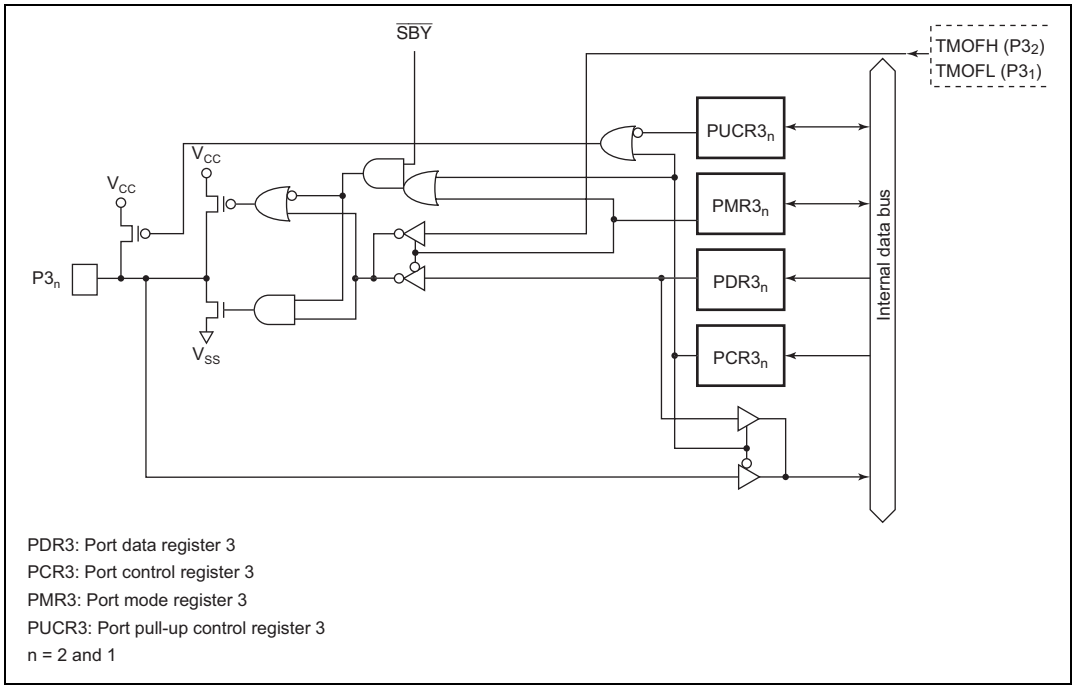

Figure C.2(d) Port 3 Block Diagram (Pins $P3_2$ and $P3_1$)

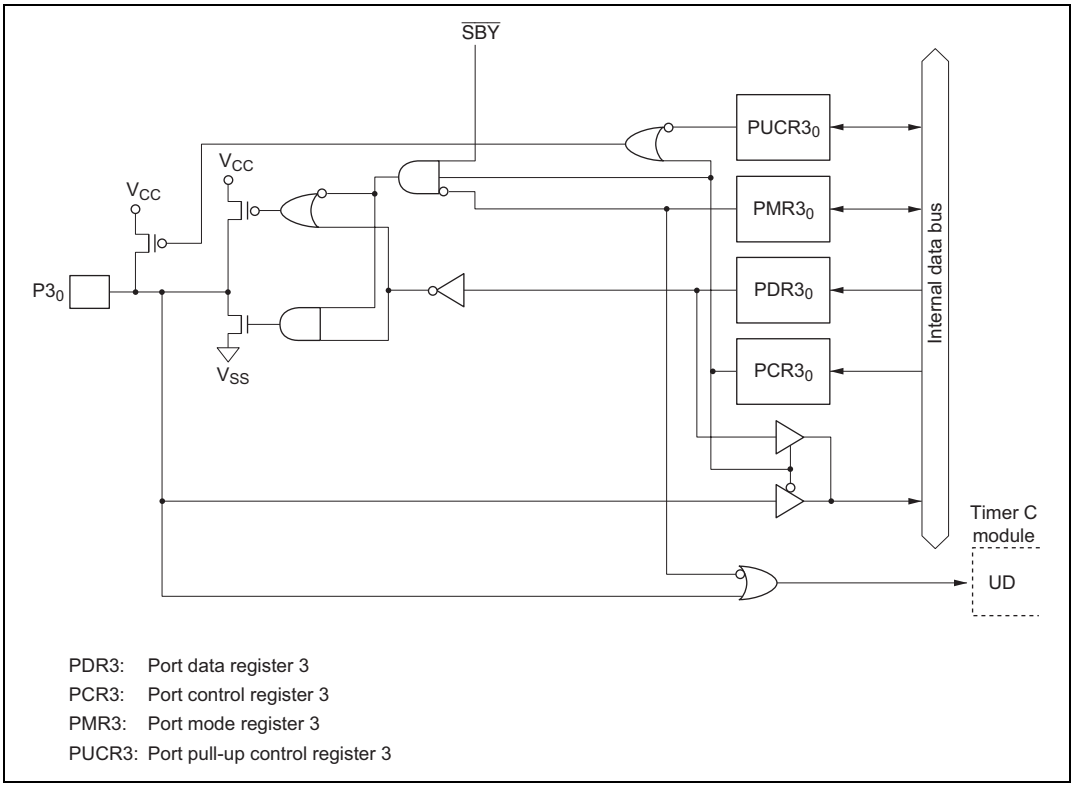

Figure C.2(e) Port 3 Block Diagram (Pin P3$_0$)

C.3 Block Diagrams of Port 4

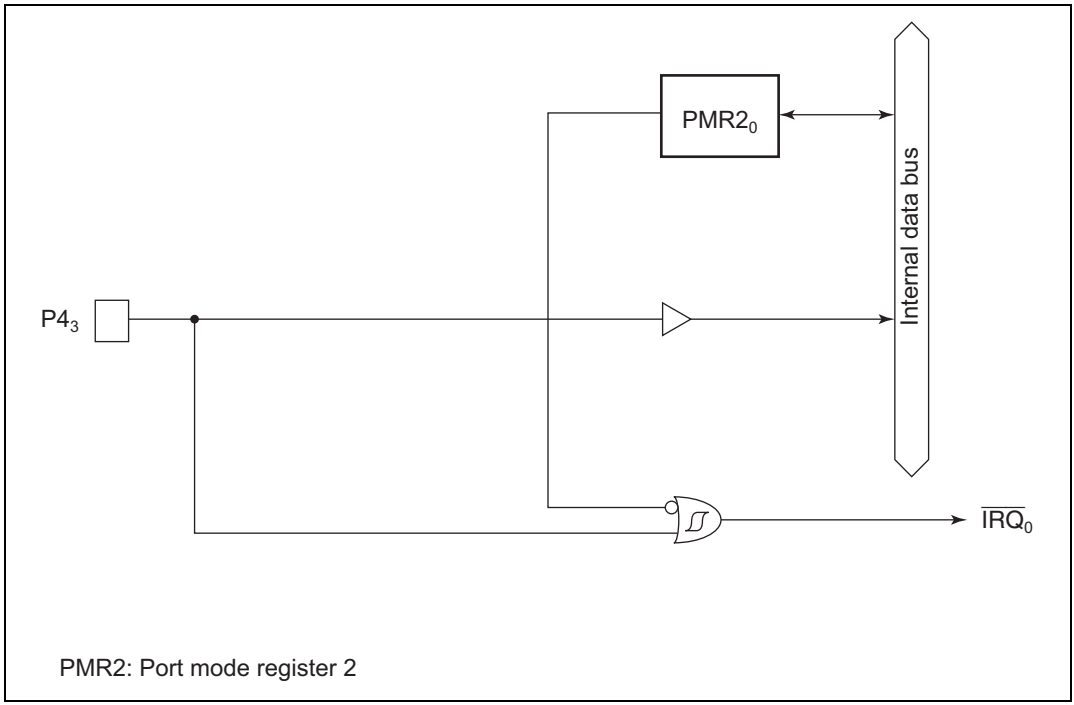

Figure C.3(a) Port 4 Block Diagram (Pin P43)

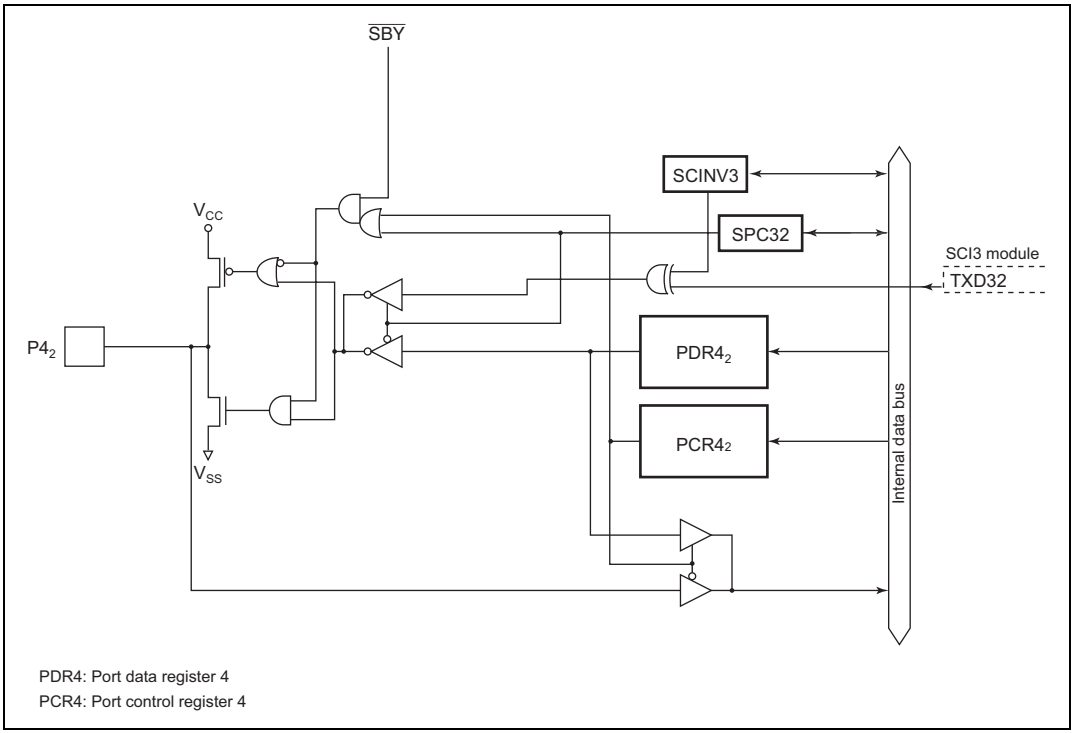

Figure C.3(b) Port 4 Block Diagram (Pin $P4_2$)

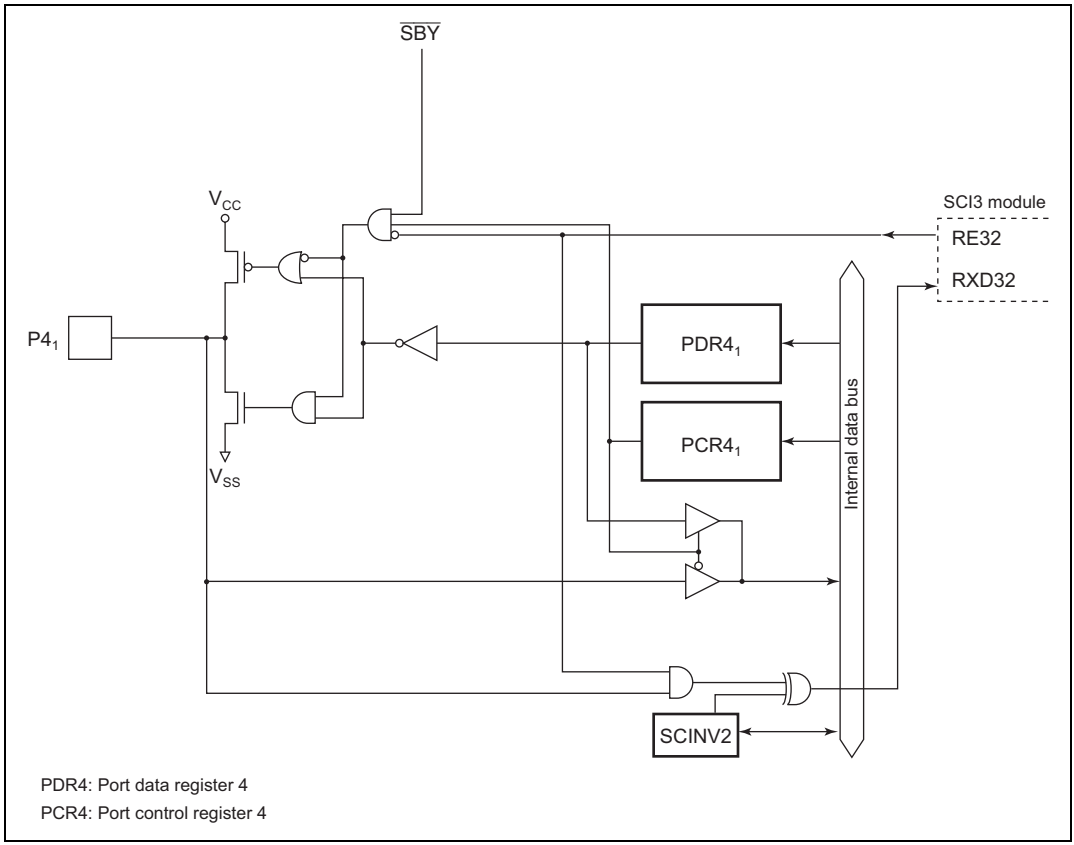

Figure C.3(c) Port 4 Block Diagram (Pin $P4_1$)

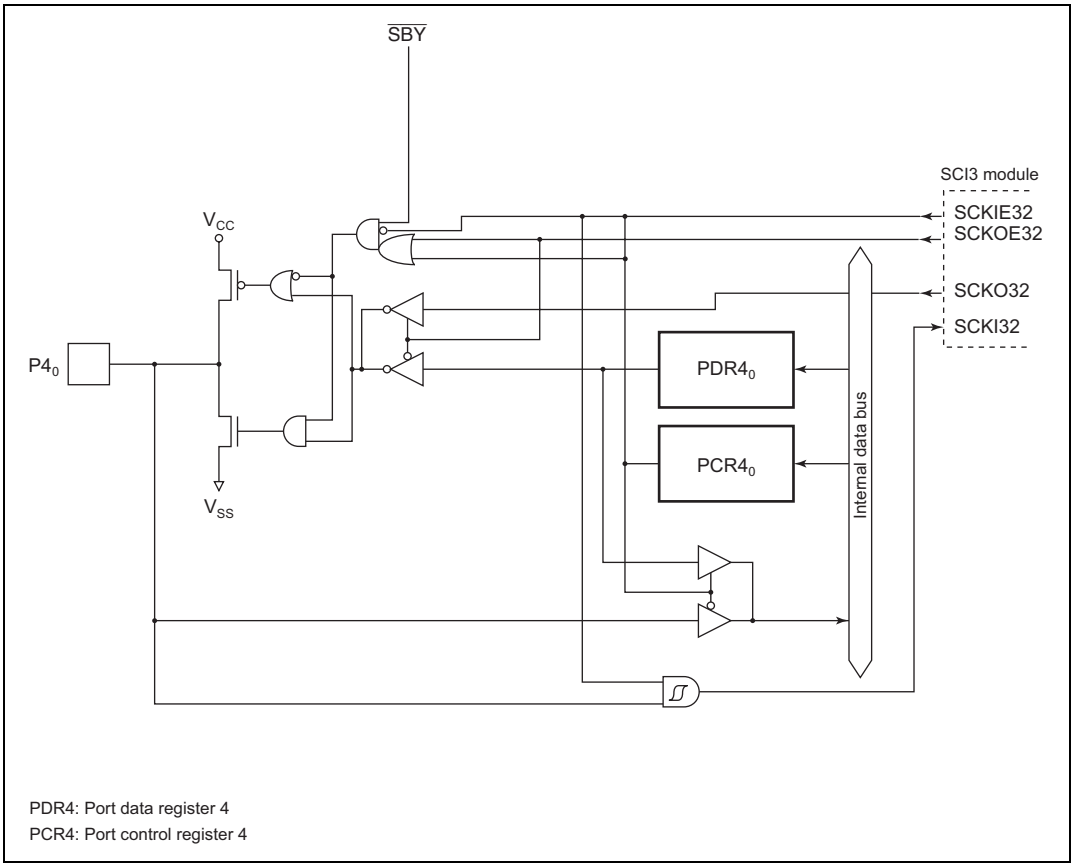

Figure C.3(d) Port 4 Block Diagram (Pin $P4_0$)

C.4 Block Diagram of Port 5

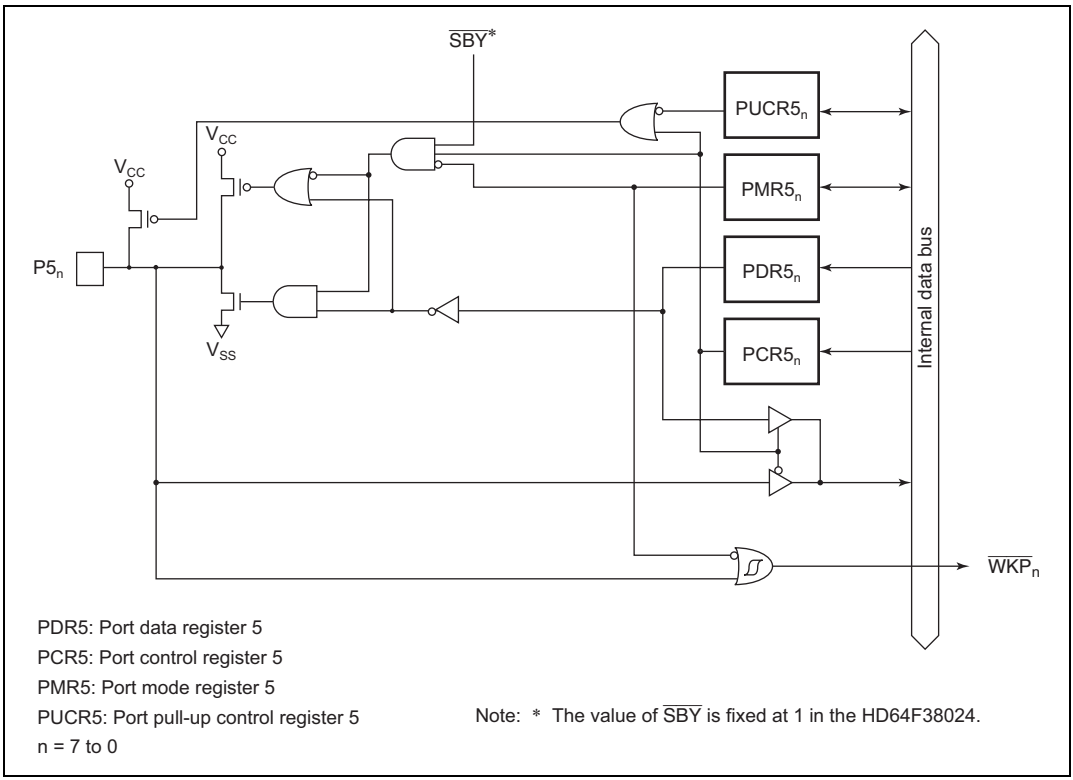

Figure C.4 Port 5 Block Diagram

C.5 Block Diagram of Port 6

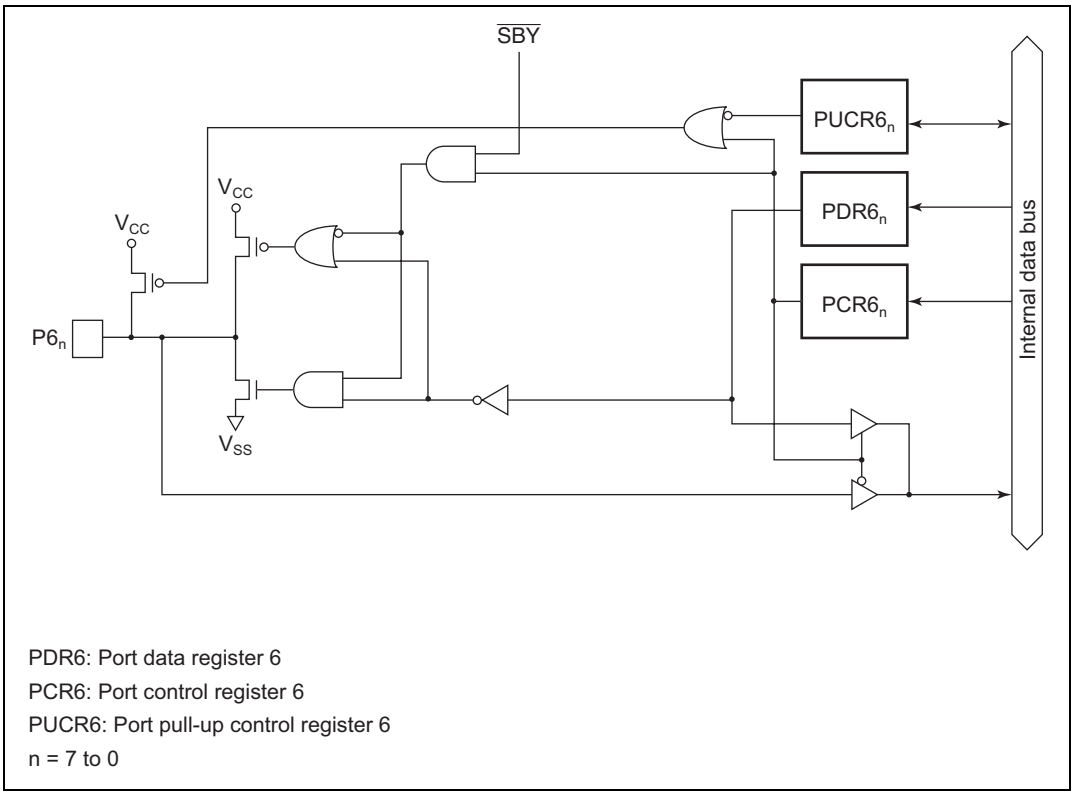

Figure C.5 Port 6 Block Diagram

C.6 Block Diagram of Port 7

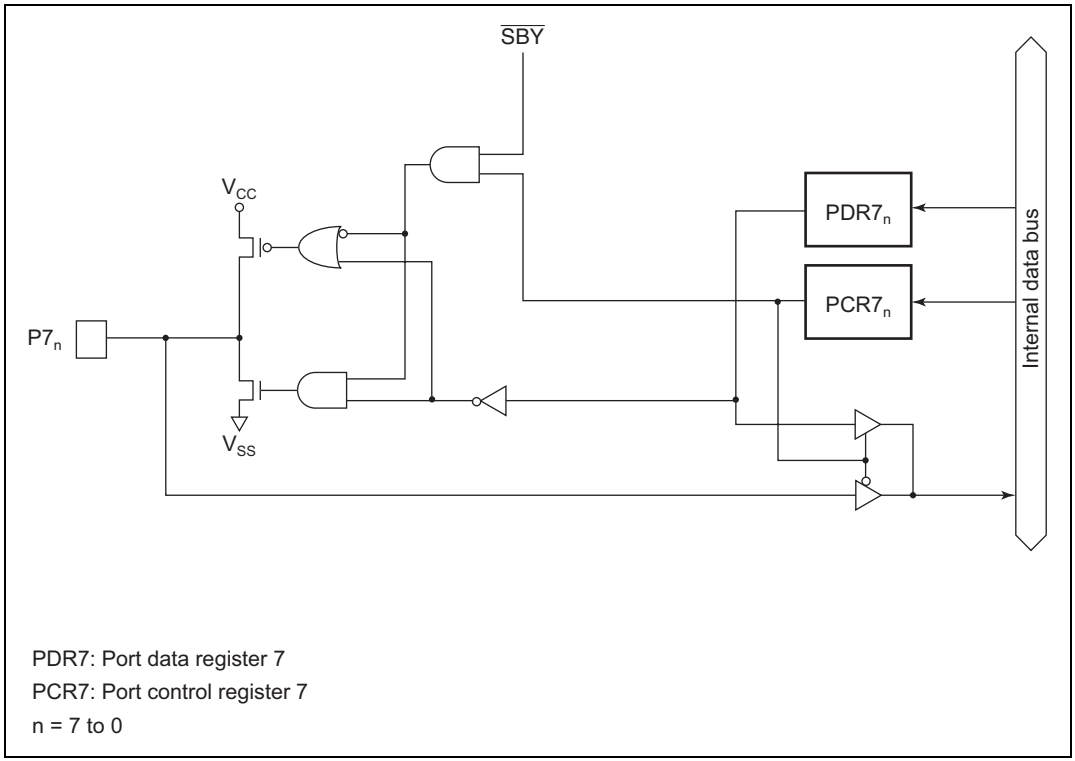

Figure C.6 Port 7 Block Diagram

C.7 Block Diagram of Port 8

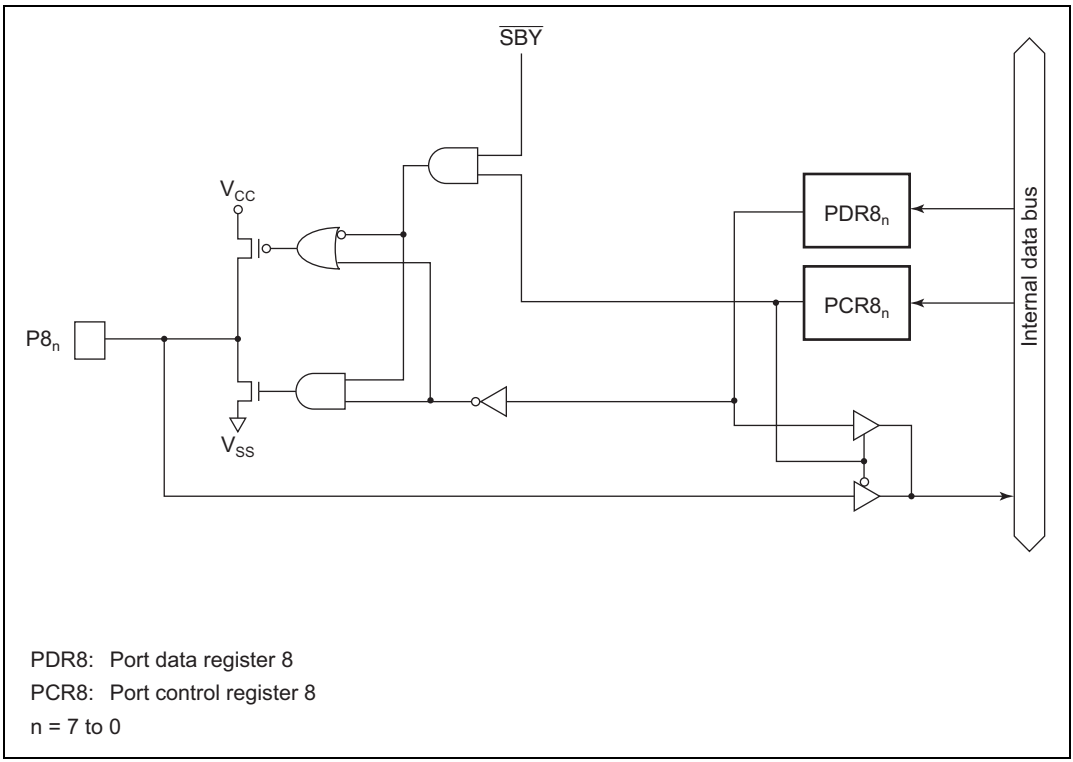

Figure C.7 Port 8 Block Diagram

C.8 Block Diagrams of Port 9

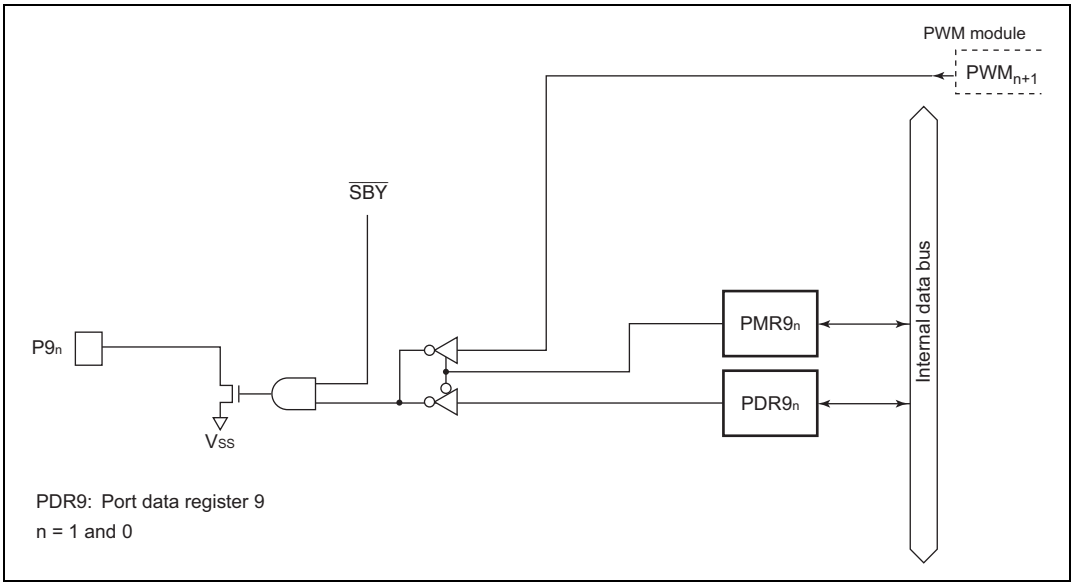

Figure C.8(a) Port 9 Block Diagram (Pins $P9_1$ and $P9_0$)

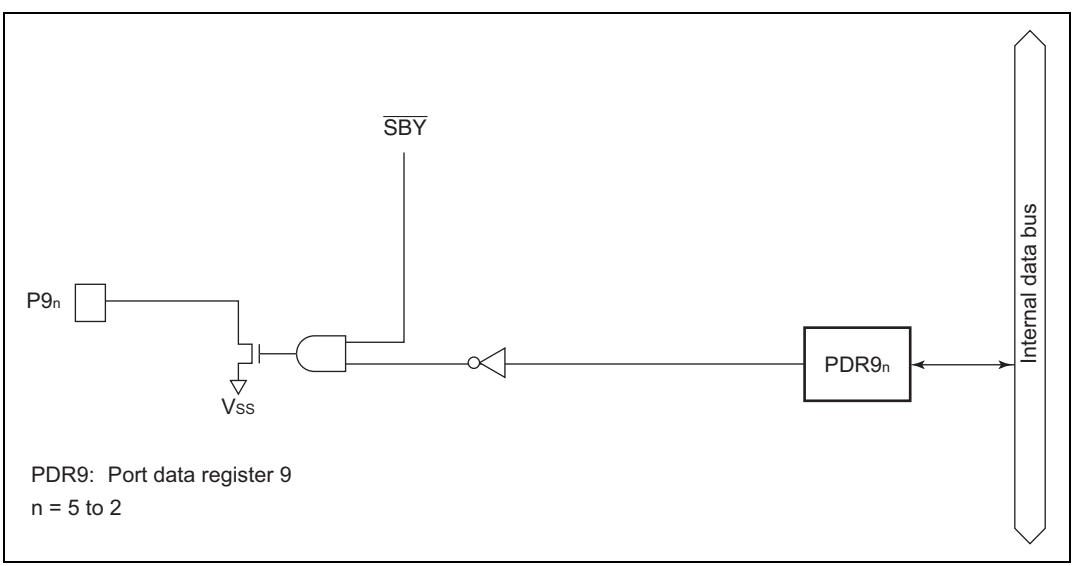

Figure C.8(b) Port 9 Block Diagram (Pins $P9_5$ to $P9_2$)

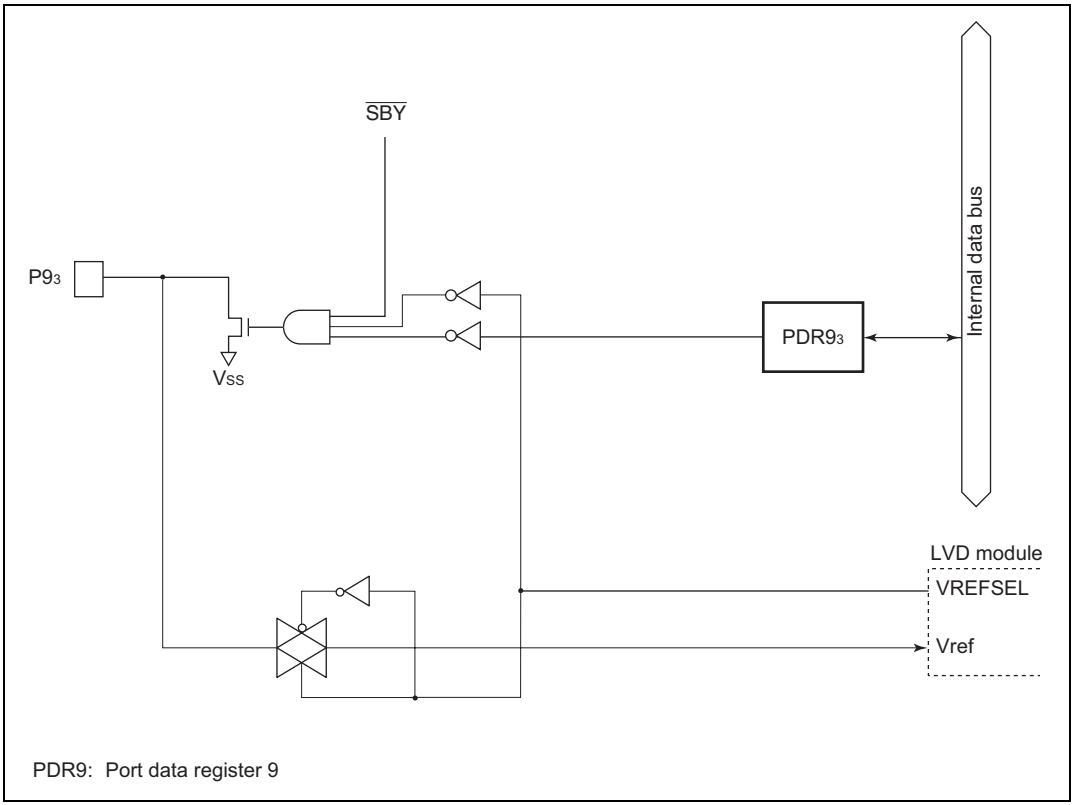

Figure C.8(c) Port 9 Block Diagram (Pins $P9_3$, H8/38124 Group only)

C.9 Block Diagram of Port A

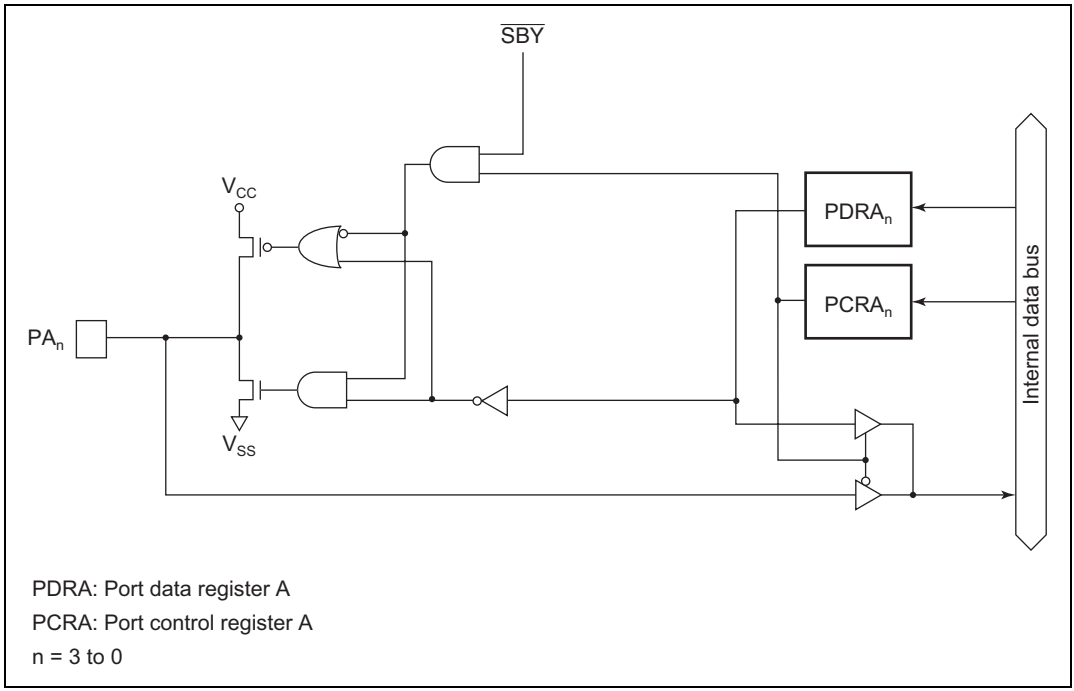

Figure C.9 Port A Block Diagram

C.10 Block Diagrams of Port B

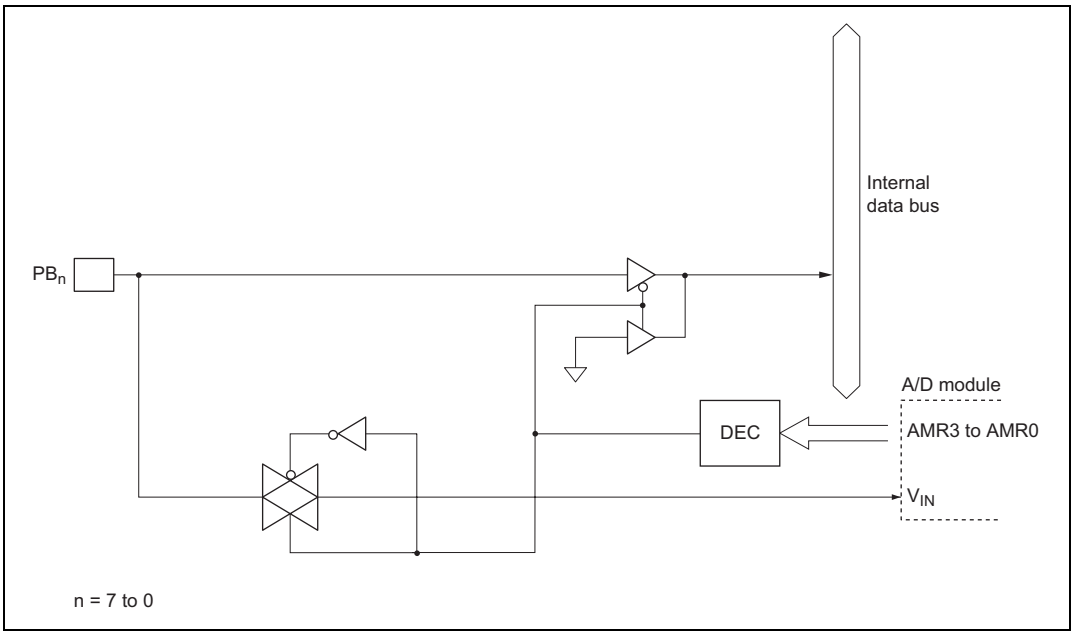

Figure C.10(a) Port B Block Diagram

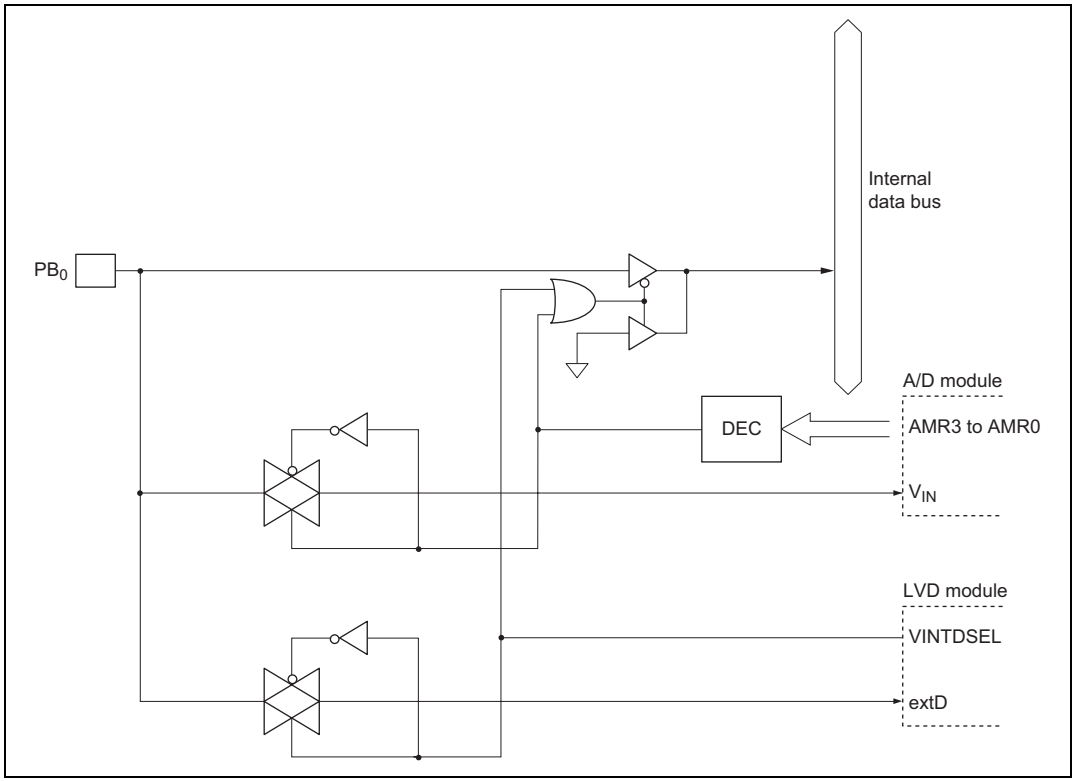

Figure C.10(b) Port B Block Diagram (Pin PB_0, H8/38124 Group only)

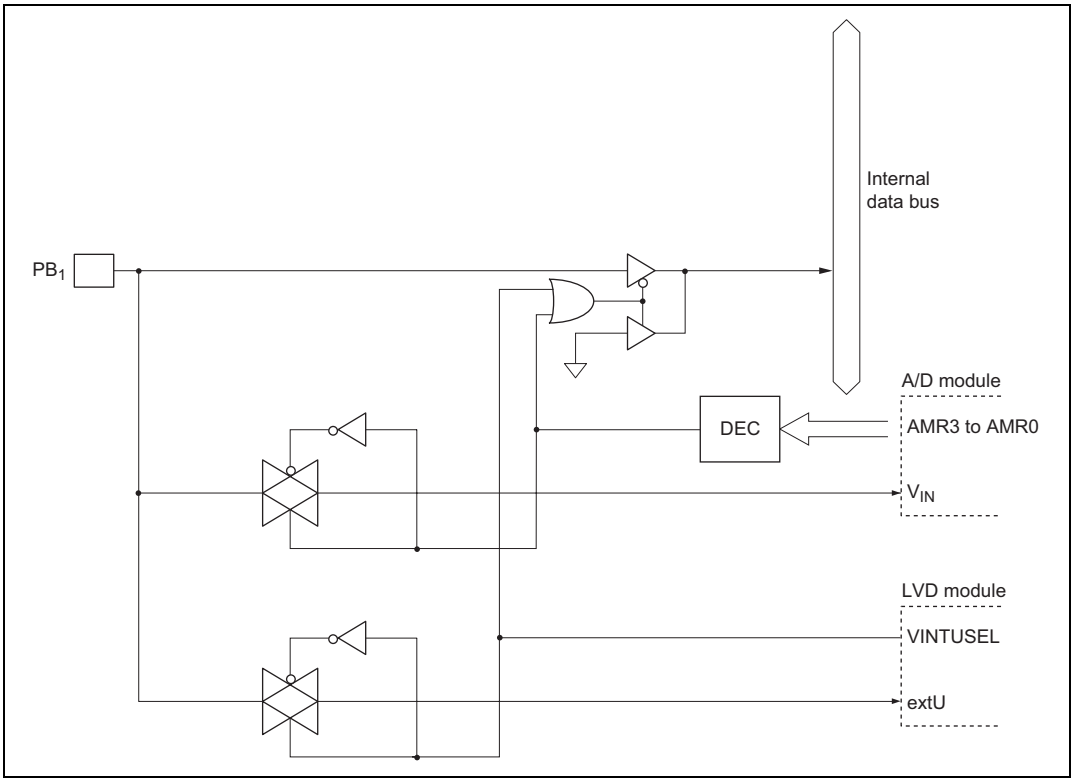

Figure C.10(c) Port B Block Diagram (Pin PB_1, H8/38124 Group only)

Appendix D Port States in the Different Processing States

Table D.1 Port States Overview

Port	Reset	Sleep	Subsleep	Standby	Watch	Subactive	Active
$P1_7$, $P1_6$*3, $P1_4$, $P1_3$	High impedance	Retained	Retained	High impedance*1	Retained	Functions	Functions
$P3_7$ to $P3_0$	High impedance	Retained	Retained	High impedance*1	Retained	Functions	Functions
$P4_3$ to $P4_0$	High impedance	Retained	Retained	High impedance	Retained	Functions	Functions
$P5_7$ to $P5_0$	High impedance	Retained	Retained	High impedance*1 *2	Retained	Functions	Functions
$P6_7$ to $P6_0$	High impedance	Retained	Retained	High impedance*1	Retained	Functions	Functions
$P7_7$ to $P7_0$	High impedance	Retained	Retained	High impedance	Retained	Functions	Functions
$P8_7$ to $P8_0$	High impedance	Retained	Retained	High impedance	Retained	Functions	Functions
$P9_5$ to $P9_0$	High impedance	Retained	Retained	High impedance*1	Retained	Functions	Functions
PA_3 to PA_0	High impedance	Retained	Retained	High impedance	Retained	Functions	Functions
PB_7 to PB_0	High impedance	High impedance	High impedance	High impedance	High impedance	High impedance	High impedance

Notes: 1. High level output when MOS pull-up is in on state.
2. In the HD64F38024 the previous pin state is retained.
3. Not implemented on H8/38124 Group.

Appendix E List of Product Codes

Table E.1 H8/38024 Group Product Code Lineup

Product Type				Part No.	Mark Code	Package (Package Code)
H8/38024 Group	H8/38024	Mask ROM versions	Regular specifications	HD64338024H	HD64338024(***)H	80-pin QFP (FP-80A)
				HD64338024F	HD64338024(***)F	80-pin QFP (FP-80B)
				HD64338024W	HD64338024(***)W	80-pin TQFP (TFP-80C)
				HCD64338024	—	Die
			Wide-range specifications	HD64338024D	HD64338024(***)H	80-pin QFP (FP-80A)
				HD64338024E	HD64338024(***)F	80-pin QFP (FP-80B)
				HD64338024WI	HD64338024(***)W	80-pin TQFP (TFP-80C)
		ZTAT versions	Regular specifications	HD64738024H	HD64738024H	80-pin QFP (FP-80A)
				HD64738024F	HD64738024F	80-pin QFP (FP-80B)
				HD64738024W	HD64738024W	80-pin TQFP (TFP-80C)
			Wide-range specifications	HD64738024D	HD64738024H	80-pin QFP (FP-80A)
				HD64738024E	HD64738024F	80-pin QFP (FP-80B)
				HD64738024WI	HD64738024W	80-pin TQFP (TFP-80C)
		F-ZTAT versions	Regular specifications	HD64F38024H	HD64F38024H	80-pin QFP (FP-80A)
				HD64F38024RH	HD64F38024H	
				HD64F38024F	HD64F38024F	80-pin QFP (FP-80B)
				HD64F38024RF	HD64F38024F	
				HD64F38024W	HD64F38024W	80-pin TQFP (TFP-80C)
				HD64F38024RW	HD64F38024W	
				HD64F38024RLPV	F38024RLPV	85-pin TFLGA (TLP-85V)
				HCD64F38024	—	Die
				HCD64F38024R	—	
			Wide-range specifications	HD64F38024D	HD64F38024H	80-pin QFP (FP-80A)
				HD64F38024RD	HD64F38024H	
				HD64F38024E	HD64F38024F	80-pin QFP (FP-80B)
				HD64F38024RE	HD64F38024F	
				HD64F38024WI	HD64F38024W	80-pin TQFP (TFP-80C)
				HD64F38024RWI	HD64F38024W	
				HD64F38024RLPIV	F38024RLPIV	85-pin TFLGA (TLP-85V)

Product Type				Part No.	Mark Code	Package (Package Code)
H8/38024 Group	H8/38023	Mask ROM versions	Regular specifications	HD64338023H	HD64338023(***)H	80-pin QFP (FP-80A)
				HD64338023F	HD64338023(***)F	80-pin QFP (FP-80B)
				HD64338023W	HD64338023(***)W	80-pin TQFP (TFP-80C)
				HCD64338023	—	Die
			Wide-range specifications	HD64338023D	HD64338023(***)H	80-pin QFP (FP-80A)
				HD64338023E	HD64338023(***)F	80-pin QFP (FP-80B)
				HD64338023WI	HD64338023(***)W	80-pin TQFP (TFP-80C)
	H8/38022	Mask ROM versions	Regular specifications	HD64338022H	HD64338022(***)H	80-pin QFP (FP-80A)
				HD64338022F	HD64338022(***)F	80-pin QFP (FP-80B)
				HD64338022W	HD64338022(***)W	80-pin TQFP (TFP-80C)
				HCD64338022	—	Die
			Wide-range specifications	HD64338022D	HD64338022(***)H	80-pin QFP (FP-80A)
				HD64338022E	HD64338022(***)F	80-pin QFP (FP-80B)
				HD64338022WI	HD64338022(***)W	80-pin TQFP (TFP-80C)
	H8/38021	Mask ROM versions	Regular specifications	HD64338021H	HD64338021(***)H	80-pin QFP (FP-80A)
				HD64338021F	HD64338021(***)F	80-pin QFP (FP-80B)
				HD64338021W	HD64338021(***)W	80-pin TQFP (TFP-80C)
				HCD64338021	—	Die
			Wide-range specifications	HD64338021D	HD64338021(***)H	80-pin QFP (FP-80A)
				HD64338021E	HD64338021(***)F	80-pin QFP (FP-80B)
				HD64338021WI	HD64338021(***)W	80-pin TQFP (TFP-80C)
	H8/38020	Mask ROM versions	Regular specifications	HD64338020H	HD64338020(***)H	80-pin QFP (FP-80A)
				HD64338020F	HD64338020(***)F	80-pin QFP (FP-80B)
				HD64338020W	HD64338020(***)W	80-pin TQFP (TFP-80C)
				HCD64338020	—	Die
			Wide-range specifications	HD64338020D	HD64338020(***)H	80-pin QFP (FP-80A)
				HD64338020E	HD64338020(***)F	80-pin QFP (FP-80B)
				HD64338020WI	HD64338020(***)W	80-pin TQFP (TFP-80C)

Product Type				Part No.	Mark Code	Package (Package Code)
H8/38024S Group	H8/38024S	Mask ROM versions	Regular specifications	HD64338024SH	HD64338024(***)H	80-pin QFP (FP-80A)
				HD64338024SW	HD64338024(***)W	80-pin TQFP (TFP-80C)
				HD64338024SLPV	338024S(***)LPV	85-pin TFLGA (TLP-85V)
				HCD64338024S	—	Die
			Wide-range specifications	HD64338024SD	HD64338024(***)H	80-pin QFP (FP-80A)
				HD64338024SWI	HD64338024(***)W	80-pin TQFP (TFP-80C)
				HD64338024SLPIV	338024S(***)LPIV	85-pin TFLGA (TLP-85V)
	H8/38023S	Mask ROM versions	Regular specifications	HD64338023SH	HD64338023(***)H	80-pin QFP (FP-80A)
				HD64338023SW	HD64338023(***)W	80-pin TQFP (TFP-80C)
				HD64338023SLPV	338023S(***)LPV	85-pin TFLGA (TLP-85V)
				HCD64338023S	—	Die
			Wide-range specifications	HD64338023SD	HD64338023(***)H	80-pin QFP (FP-80A)
				HD64338023SWI	HD64338023(***)W	80-pin TQFP (TFP-80C)
				HD64338023SLPIV	338023S(***)LPIV	85-pin TFLGA (TLP-85V)
	H8/38022S	Mask ROM versions	Regular specifications	HD64338022SH	HD64338022(***)H	80-pin QFP (FP-80A)
				HD64338022SW	HD64338022(***)W	80-pin TQFP (TFP-80C)
				HD64338022SLPV	338022S(***)LPV	85-pin TFLGA (TLP-85V)
				HCD64338022S	—	Die
			Wide-range specifications	HD64338022SD	HD64338022(***)H	80-pin QFP (FP-80A)
				HD64338022SWI	HD64338022(***)W	80-pin TQFP (TFP-80C)
				HD64338022SLPIV	338022S(***)LPIV	85-pin TFLGA (TLP-85V)
	H8/38021S	Mask ROM versions	Regular specifications	HD64338021SH	HD64338021(***)H	80-pin QFP (FP-80A)
				HD64338021SW	HD64338021(***)W	80-pin TQFP (TFP-80C)
				HD64338021SLPV	338021S(***)LPV	85-pin TFLGA (TLP-85V)
				HCD64338021S	—	Die
			Wide-range specifications	HD64338021SD	HD64338021(***)H	80-pin QFP (FP-80A)
				HD64338021SWI	HD64338021(***)W	80-pin TQFP (TFP-80C)
				HD64338021SLPIV	338021S(***)LPIV	85-pin TFLGA (TLP-85V)
	H8/38020S	Mask ROM versions	Regular specifications	HD64338020SH	HD64338020(***)H	80-pin QFP (FP-80A)
				HD64338020SW	HD64338020(***)W	80-pin TQFP (TFP-80C)
				HD64338020SLPV	338020S(***)LPV	85-pin TFLGA (TLP-85V)
				HCD64338020S	—	Die
			Wide-range specifications	HD64338020SD	HD64338020(***)H	80-pin QFP (FP-80A)
				HD64338020SWI	HD64338020(***)W	80-pin TQFP (TFP-80C)
				HD64338020SLPIV	338020S(***)LPIV	85-pin TFLGA (TLP-85V)

Product Type				Part No.	Mark Code	Package (Package Code)
H8/38124 Group	H8/38124	F-ZTAT versions	Regular specifications	HD64F38124H	F38124H	80-pin QFP (FP-80A)
				HD64F38124W	F38124W	80-pin TQFP (TFP-80C)
			Wide-range specifications	HD64F38124HW	F38124H	80-pin QFP (FP-80A)
				HD64F38124WW	F38124W	80-pin TQFP (TFP-80C)
		Mask ROM versions	Regular specifications	HD64338124H	38124(***)H	80-pin QFP (FP-80A)
				HD64338124W	38124(***)W	80-pin TQFP (TFP-80C)
			Wide-range specifications	HD64338124HW	38124(***)H	80-pin QFP (FP-80A)
				HD64338124WW	38124(***)W	80-pin TQFP (TFP-80C)
	H8/38123	Mask ROM versions	Regular specifications	HD64338123H	38123(***)H	80-pin QFP (FP-80A)
				HD64338123W	38123(***)W	80-pin TQFP (TFP-80C)
			Wide-range specifications	HD64338123HW	38123(***)H	80-pin QFP (FP-80A)
				HD64338123WW	38123(***)W	80-pin TQFP (TFP-80C)
	H8/38122	F-ZTAT versions	Regular specifications	HD64F38122H	F38122H	80-pin QFP (FP-80A)
				HD64F38122W	F38122W	80-pin TQFP (TFP-80C)
			Wide-range specifications	HD64F38122HW	F38122H	80-pin QFP (FP-80A)
				HD64F38122WW	F38122W	80-pin TQFP (TFP-80C)
		Mask ROM versions	Regular specifications	HD64338122H	38122(***)H	80-pin QFP (FP-80A)
				HD64338122W	38122(***)W	80-pin TQFP (TFP-80C)
			Wide-range specifications	HD64338122HW	38122(***)H	80-pin QFP (FP-80A)
				HD64338122WW	38122(***)W	80-pin TQFP (TFP-80C)
	H8/38121	Mask ROM versions	Regular specifications	HD64338121H	38121(***)H	80-pin QFP (FP-80A)
				HD64338121W	38121(***)W	80-pin TQFP (TFP-80C)
			Wide-range specifications	HD64338121HW	38121(***)H	80-pin QFP (FP-80A)
				HD64338121WW	38121(***)W	80-pin TQFP (TFP-80C)
	H8/38120	Mask ROM versions	Regular specifications	HD64338120H	38120(***)H	80-pin QFP (FP-80A)
				HD64338120W	38120(***)W	80-pin TQFP (TFP-80C)
			Wide-range specifications	HD64338120HW	38120(***)H	80-pin QFP (FP-80A)
				HD64338120WW	38120(***)W	80-pin TQFP (TFP-80C)

Note: (***) is the ROM code.

Appendix F Package Dimensions

Dimensional drawings of the H8/38024 Group, H8/38024S Group, and H8/38124 Group packages FP-80A, FP-80B, and TFP-80C are shown in figures F.1, F.2, and F.3 below.

JEITA Package Code	RENESAS Code	Previous Code	MASS[Typ.]
P-QFP80-14x14-0.65	PRQP0080JB-A	FP-80A/FP-80AV	1.2g

NOTE)
1. DIMENSIONS"*1"AND"*2" DO NOT INCLUDE MOLD FLASH
2. DIMENSION"*3"DOES NOT INCLUDE TRIM OFFSET.

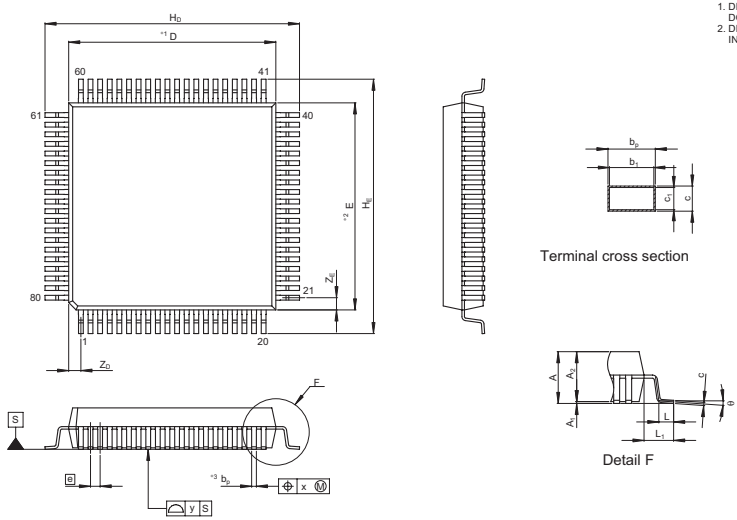

Reference Symbol	Dimension in Millimeters		
	Min	Nom	Max
D	—	14	—
E	—	14	—
A_2	—	2.70	—
H_D	16.9	17.2	17.5
H_E	16.9	17.2	17.5
A	—	—	3.05
A_1	0.00	0.10	0.25
b_p	0.24	0.32	0.40
b_1	—	0.30	—
c	0.12	0.17	0.22
c_1	—	0.15	—
θ	0°	—	8°
e	—	0.65	—
x	—	—	0.12
y	—	—	0.10
Z_D	—	0.83	—
Z_E	—	0.83	—
L	0.5	0.8	1.1
L_1	—	1.6	—

Figure F.1 FP-80A Package Dimensions

JEITA Package Code	RENESAS Code	Previous Code	MASS[Typ.]
P-QFP80-14x20-0.80	PRQP0080GD-B	FP-80B/FP-80BV	1.7g

NOTE)
1. DIMENSIONS"*1"AND"*2" DO NOT INCLUDE MOLD FLASH
2. DIMENSION"*3"DOES NOT INCLUDE TRIM OFFSET.

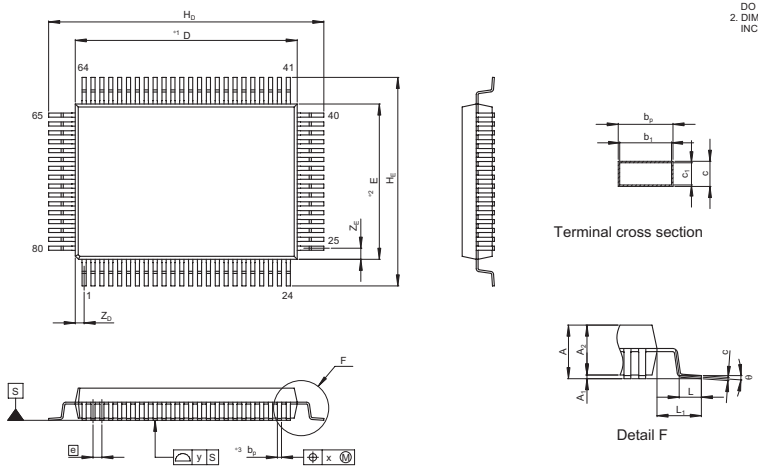

Terminal cross section

Detail F

Reference Symbol	Dimension in Millimeters		
	Min	Nom	Max
D	—	20	—
E	—	14	—
A_2	—	2.70	—
H_D	24.4	24.8	25.2
H_E	18.4	18.8	19.2
A	—	—	3.10
A_1	0.00	0.20	0.30
b_p	0.29	0.37	0.45
b_1	—	0.35	—
c	0.12	0.17	0.22
c_1	—	0.15	—
θ	0°	—	10°
e	—	0.8	—
x	—	—	0.15
y	—	—	0.15
Z_D	—	0.8	—
Z_E	—	1.0	—
L	1.0	1.2	1.4
L_1	—	2.4	—

Figure F.2 FP-80B Package Dimensions

JEITA Package Code	RENESAS Code	Previous Code	MASS[Typ.]
P-TQFP80-12x12-0.50	PTQP0080KC-A	TFP-80C/TFP-80CV	0.4g

NOTE)
1. DIMENSIONS"*1"AND"*2"
   DO NOT INCLUDE MOLD FLASH
2. DIMENSION"*3"DOES NOT
   INCLUDE TRIM OFFSET.

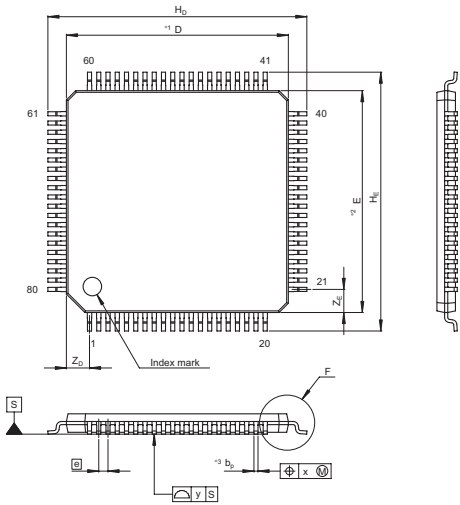

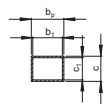

Terminal cross section

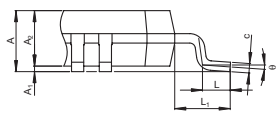

Detail F

Reference Symbol	Dimension in Millimeters		
	Min	Nom	Max
D	—	12	—
E	—	12	—
A_2	—	1.00	—
H_D	13.8	14.0	14.2
H_E	13.8	14.0	14.2
A	—	—	1.20
A_1	0.00	0.10	0.20
b_p	0.17	0.22	0.27
b_1	—	0.20	—
c	0.12	0.17	0.22
c_1	—	0.15	—
θ	0°	—	8°
e	—	0.5	—
x	—	—	0.10
y	—	—	0.10
Z_D	—	1.25	—
Z_E	—	1.25	—
L	0.4	0.5	0.6
L_1	—	1.0	—

Figure F.3 TFP-80C Package Dimensions

JEITA Package Code	RENESAS Code	Previous Code	MASS[Typ.]
P-TFLGA85-7x7-0.65	PTLG0085JA-A	TLP-85V	0.1g

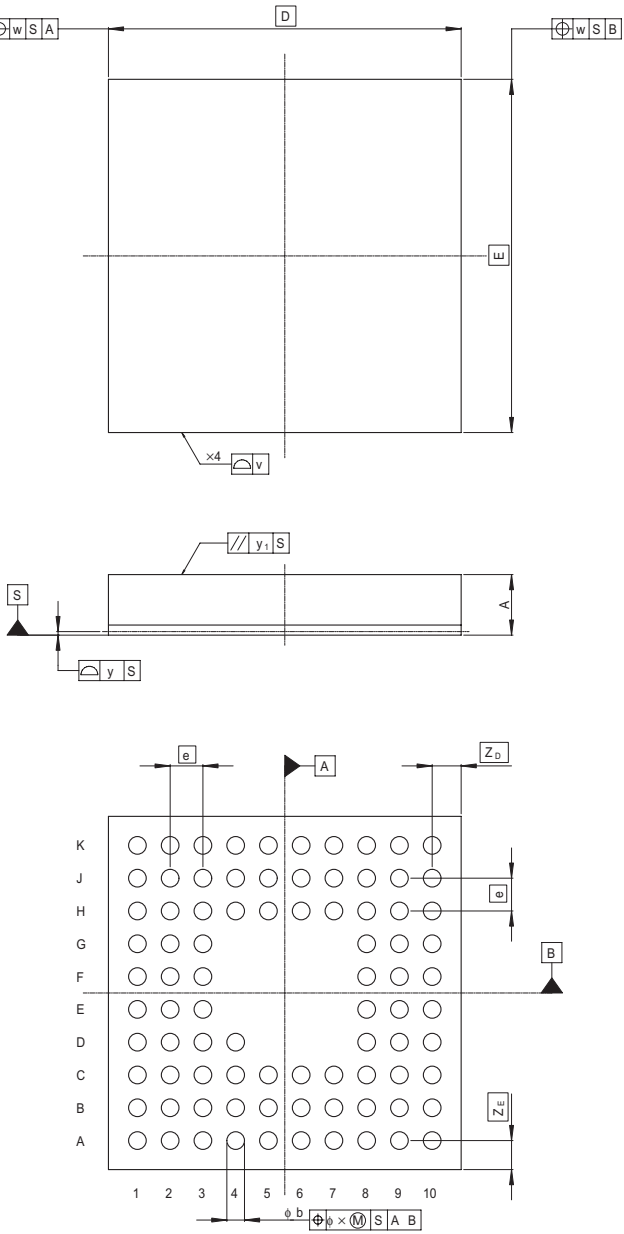

Reference Symbol	Dimension in Millimeters		
	Min	Nom	Max
D	—	7.0	—
E	—	7.0	—
v	—	—	0.15
w	—	—	0.20
A	—	—	1.20
A_1	—	—	—
e	—	0.65	—
b	0.30	0.35	0.40
x	—	—	0.08
y	—	—	0.10
y_1	—	—	0.2
S_D	—	—	—
S_E	—	—	—
Z_D	—	0.575	—
Z_E	—	0.575	—

Figure F.4 TLP-85V Package Dimensions

Appendix G Specifications of Chip Form

The specifications of the chip form of the HCD64338024, HCD64338023, HCD64338022, HCD64338021, and HCD64338020 are shown in figure G.1. The specifications of the chip form of the HCD64F38024 and HCD64F38024R are shown in figure G.2. The specifications of the chip form of the HCD64338024S, HCD64338023S, HCD64338022S, HCD64338021S, and HCD64338020S are shown in figure G.3.

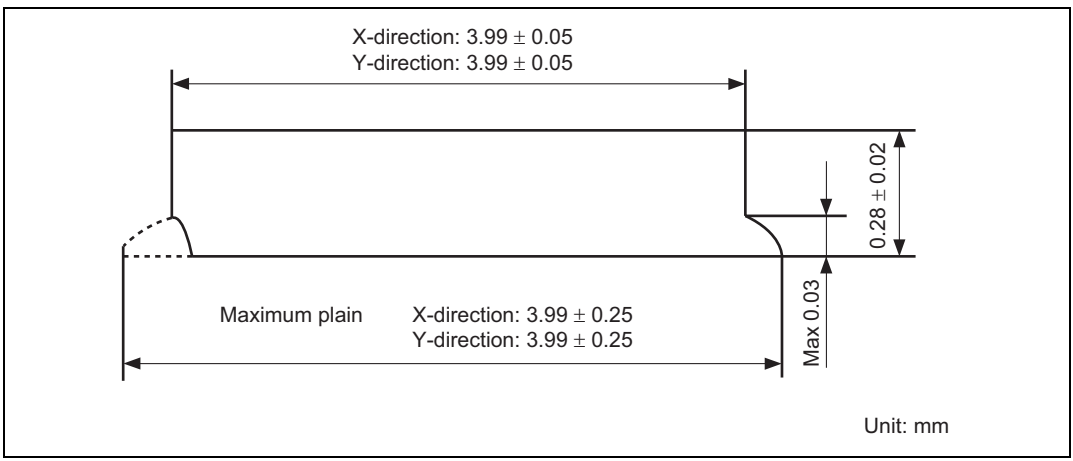

Figure G.1 Chip Sectional Figure of the HCD64338024, HCD64338023, HCD64338022, HCD64338021, and HCD64338020

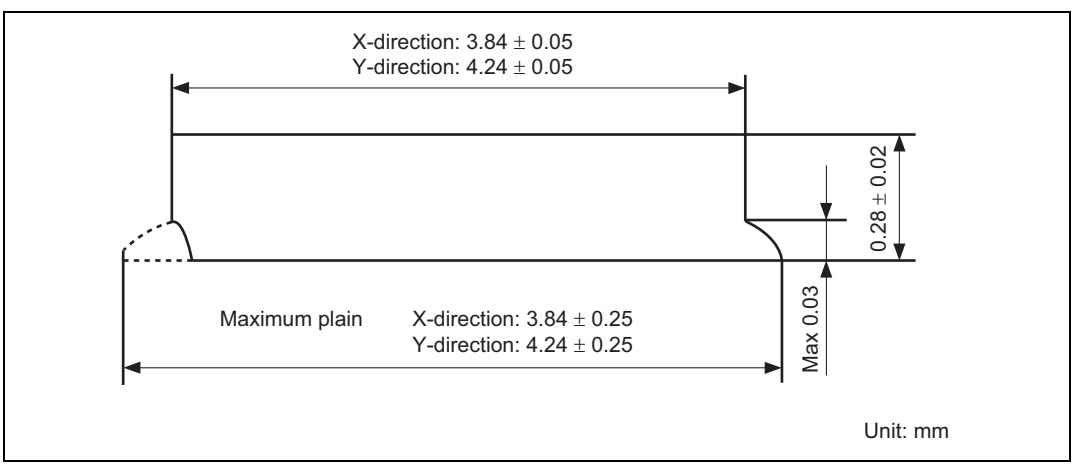

Figure G.2 Chip Sectional Figure of the HCD64F38024 and HCD64F38024R

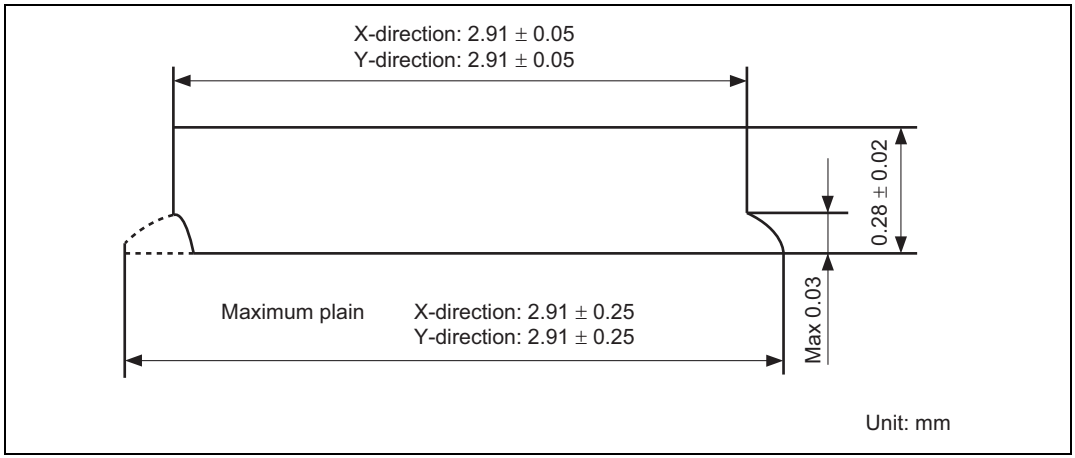

Figure G.3 Chip Sectional Figure of the HCD64338024S, HCD64338023S, HCD64338022S, HCD64338021S, and HCD64338020S

Appendix H Form of Bonding Pads

The form of the bonding pads for the HCD64338024, HCD64338023, HCD64338022, HCD64338021, HCD64338020, HCD64F38024, HCD64F38024R, HCD64338024S, HCD64338023S, HCD64338022S, HCD64338021S, and HCD64338020S is shown in figure H.1.

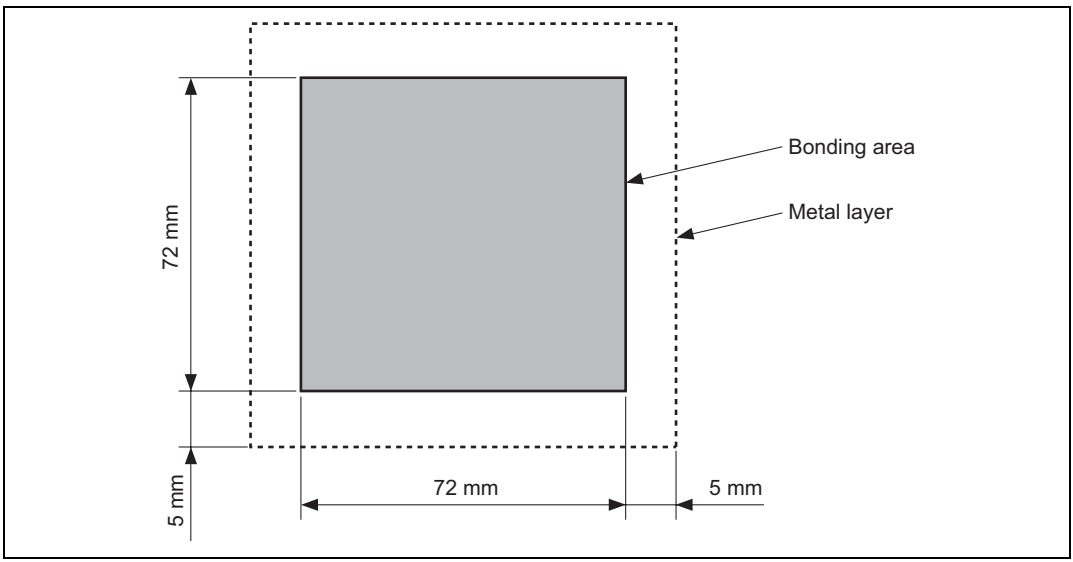

Figure H.1 Bonding Pad Form

Appendix I Specifications of Chip Tray

The specifications of the chip tray for the HCD64338024, HCD64338023, HCD64338022, HCD64338021, and HCD64338020 are shown in figure I.1. The specifications of the chip tray for the HCD64F38024 and HCD64F38024R are shown in figure I.2. The specifications of the chip tray for the HCD64338024S, HCD64338023S, HCD64338022S, HCD64338021S, and HCD64338020S are shown in figure I.3.

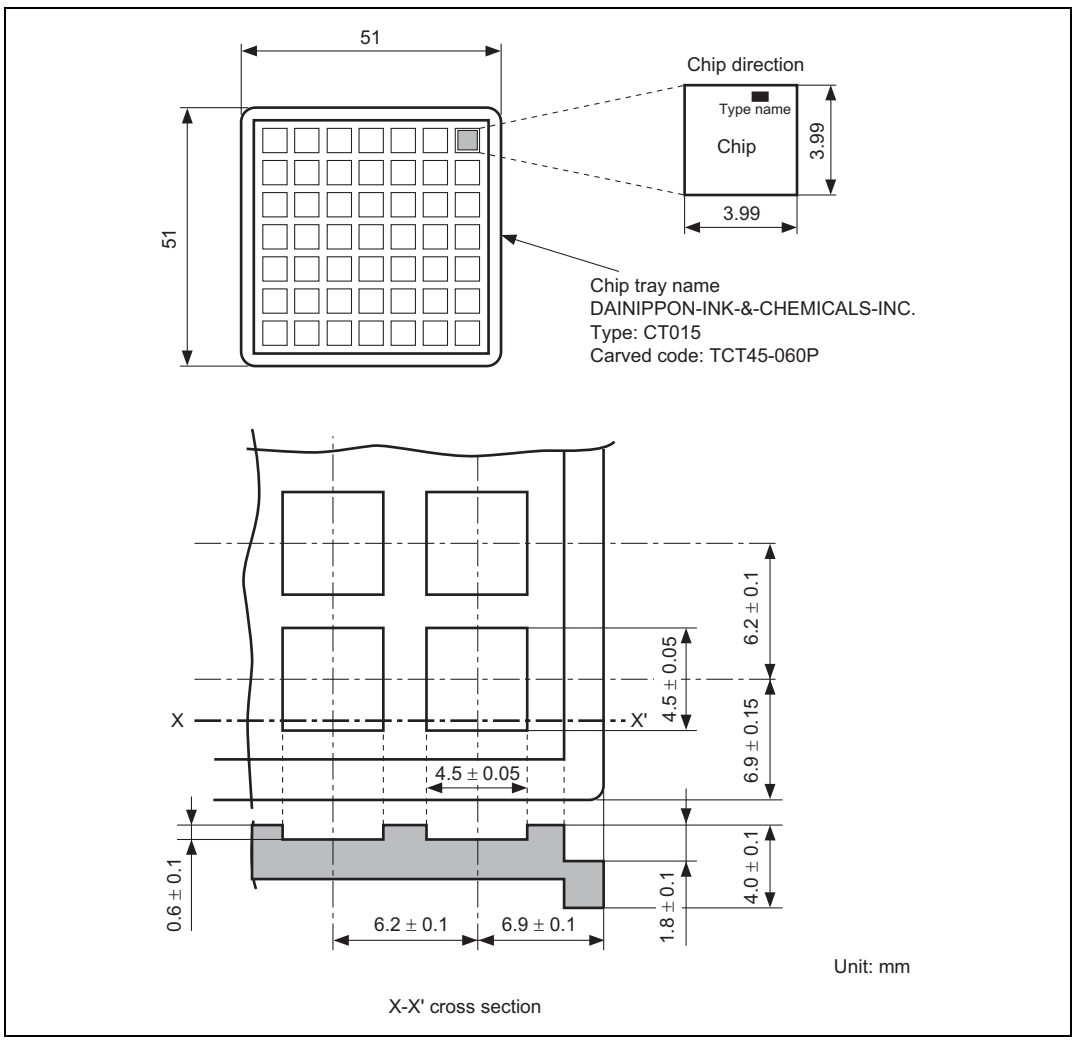

Figure I.1 Specifications of Chip Tray for the HCD64338024, HCD64338023, HCD64338022, HCD64338021, and HCD64338020

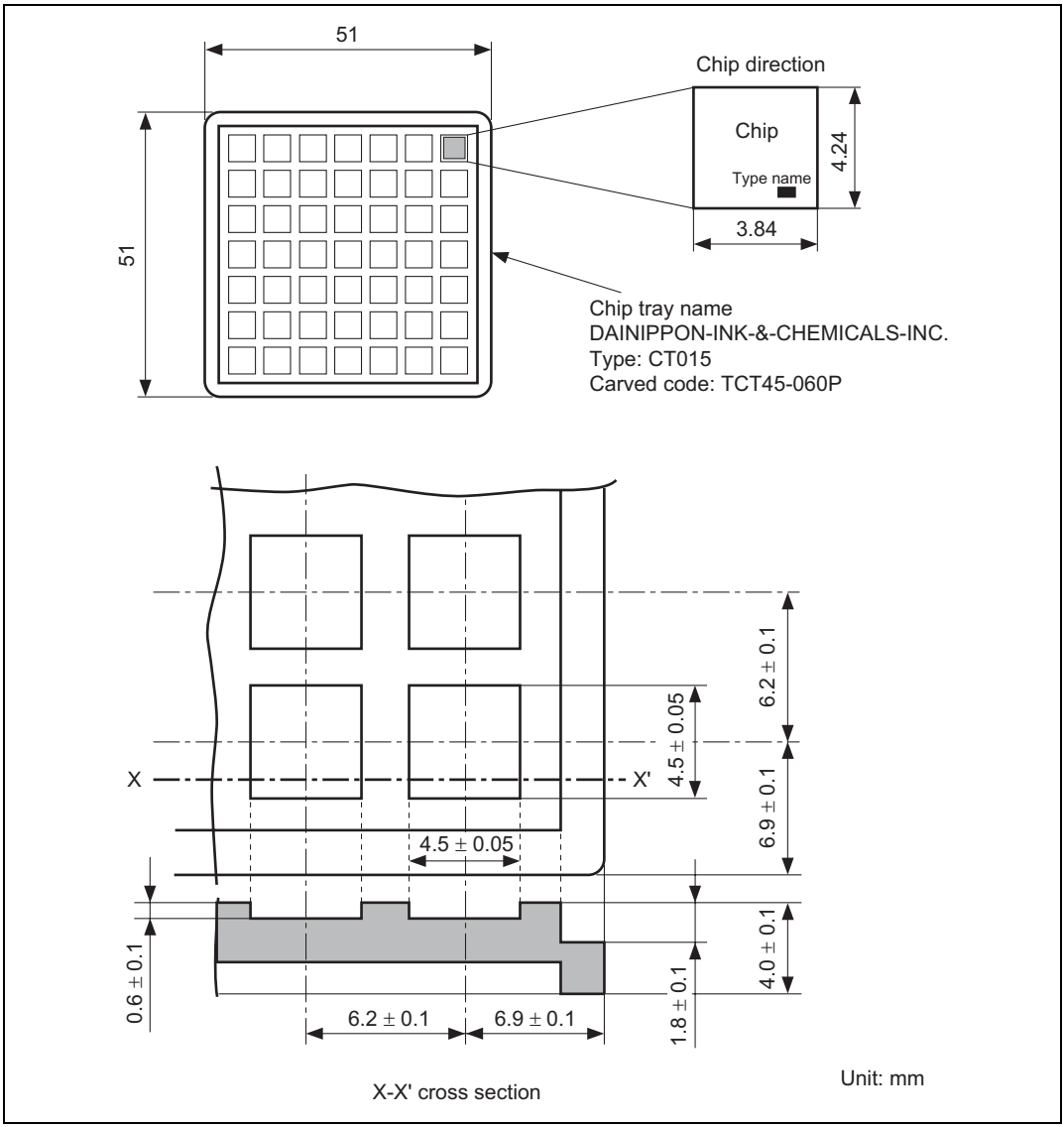

Figure I.2 Specifications of Chip Tray for the HCD64F38024 and HCD64F38024R

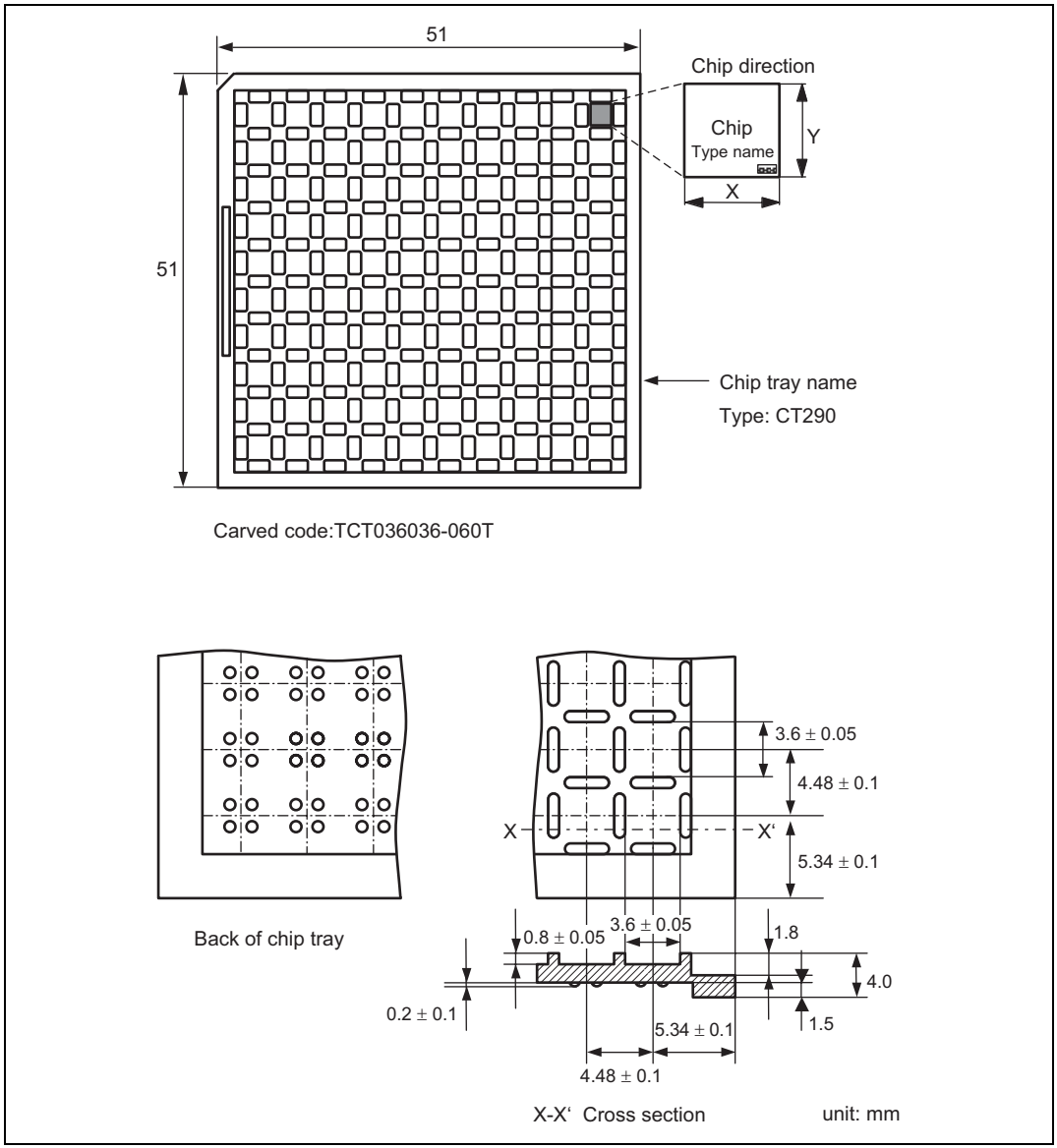

Figure I.3 Specifications of Chip Tray for the HCD64338024S, HCD64338023S, HCD64338022S, HCD64338021S, and HCD64338020S

Main Revisions for This Edition

Item	Page	Revision (See Manual for Details)
1.1 Overview Table 1.1 Features	5	Table amended **Item** / **Specification** Serial communication interface: • SCI3: 8-bit synchronous/asynchronous serial interface
4.3 Subclock Generator Figure 4.8 Typical Connection to 32.768 kHz/38.4 kHz Crystal Oscillator (Subclock)	111	Figure amended 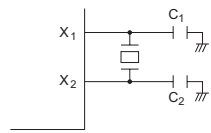 $C^1 = C^2$ = 15 pF (typ.) Frequency / Crystal oscillator / Products Name 38.4 kHz / Seiko Instruments Inc. / VTC-200 32.768 kHz / Nihon Denpa Kogyo / MX73P $C^1 = C^2$ = 7 pF (typ.) Frequency / Crystal oscillator / Products Name / Motion Resistance 32.768 kHz* / EPSON TOYOCOM. / C-001R / 35 kΩ max Notes: Circuit constants should be detemined in consultation with the resonator manufacture. * H8/38124 Group only.
5.10 Usage Note	144	Newly added
6.10.6 Status Read Mode Figure 6.19 Status Read Mode Timing Waveforms	188	Figure amended 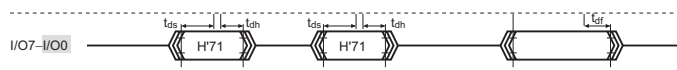
10.1 Overview	333	Description deleted Serial communication interface 3 (SCI3) can carry out serial data communication in either asynchronous or synchronous mode.
10.1.1 Features	333	Description amended • Choice of asynchronous or synchronous mode for serial data communication … In this mode, serial data can be exchanged with standard asynchronous communication LSIs such as a Universal Asynchronous Receiver/Transmitter (UART) or Asynchronous Communication Interface Adapter (ACIA). There is a choice of 12 data transfer formats.

Item	Page	Revision (See Manual for Details)
10.1.1 Features	333	Table amended

Data length	7, 8, 5 bits
Stop bit length	1 or 2 bits
Parity	Even, odd, or none
Receive error detection	Parity, overrun, and framing errors
Break detection	Break detected by reading the RXD_{32} pin level directly when a framing error occurs

10.2.5 Serial Mode Register (SMR)	341	Description amended Bit 2—5 Bit Communication (MP) When this bit is one, the format of 5 bits communication becomes possible. In the case of writing 1 to this bit, bit 5 (PE) should be written with 1 all at once.
		Table amended

Bit 2 MP	Description	
0	5 bit communication disabled	(initial value)
1	5 bit communication enabled	

10.2.6 Serial Control Register 3 (SCR3)	344	Description amended Bit 3—Reserved (MPIE) It's a reserved bit.
		Table deleted
10.2.7 Serial Status Register (SSR)	346	Description amended SSR is an 8-bit register containing status flags that indicate the operational status of SCI3 .
	349	Description amended Bit 1—Reserved (MPBR) It's a reserved read-only bit.
		Table deleted
		Description amended Bit 0—Reserved (MPBT) The write value should always be 0.
		Table deleted

Item	Page	Revision (See Manual for Details)
10.3.1 Overview Asynchronous Mode	358	Description amended • Choice of parity addition, and addition of 1 or 2 stop bits. (The combination of these parameters determines the data transfer format and the character length.)
Table 10.8 SMR Settings and Corresponding Data Transfer Formats	359	Table amended

SMR						Data Transfer Format		
Bit 7 COM	Bit 6 CHR	Bit 2 MP	Bit 5 PE	Bit 3 STOP	Mode	Data Length	Parity Bit	Stop Bit Length
0	0	0	0	0	Asynchronous mode	8-bit data	No	1 bit
				1				2 bits
			1	0			Yes	1 bit
				1				2 bits
	1		0	0		7-bit data	No	1 bit
				1				2 bits
			1	0			Yes	1 bit
				1				2 bits
	0	1	0	0		Setting prohibited		
				1				
			1	0	Asynchronous mode	5-bit data	No	1 bit
				1				2 bits
	1		0	0		Setting prohibited		
				1				
			1	0	Asynchronous mode	5-bit data	Yes	1 bit
				1				2 bits

Item	Page	Revision (See Manual for Details)
10.3.2 Operation in Asynchronous Mode Table 10.11 Data Transfer Formats (Asynchronous Mode)	363	Table amended

SMR				Serial Data Transfer Format and Frame Length
CHR	PE	MP	STOP	1 2 3 4 5 6 7 8 9 10 11 12
0	0	1	0	Setting prohibited
0	0	1	1	Setting prohibited
1	0	1	0	Setting prohibited
1	0	1	1	Setting prohibited

Item	Page	Revision (See Manual for Details)
10.3.3 Operation in Synchronous Mode	372	Description amended Parity bit cannot be added.
10.3.4 Multiprocessor Communication Function	—	Description deleted

Item	Page	Revision (See Manual for Details)
16.2.2 DC Characteristics Table 16.2 DC Characteristics	453	Table amended

Item	Symbol	Applicable Pins	Values Min	Values Typ	Values Max	Unit	Test Condition	Notes
Input high voltage	V_{IH}	$\overline{RES}$, $\overline{WKP}_0$ to $\overline{WKP}_7$, $\overline{IRQ}_0$, $\overline{IRQ}_3$, $\overline{IRQ}_4$, AEVL, AEVH, TMIC, TMIF, TMIG, $\overline{ADTRG}$, SCK_{32}	0.8 V_{CC}	—	V_{CC} + 0.3	V	V_{CC} = 4.0 V to 5.5 V	
			0.9 V_{CC}	—	V_{CC} + 0.3		Except the above	
		$\overline{IRQ}_1$	0.8 V_{CC}	—	AV_{CC} + 0.3	V	V_{CC} = 4.0 V to 5.5 V	
			0.9 V_{CC}	—	AV_{CC} + 0.3		Except the above	

16.4.2 DC Characteristics Table 16.8 DC Characteristics	469	Table amended

Item	Symbol	Applicable Pins	Values Min	Values Typ	Values Max	Unit	Test Condition	Notes
Input high voltage	V_{IH}	$\overline{RES}$, $\overline{WKP}_0$ to $\overline{WKP}_7$, $\overline{IRQ}_0$, $\overline{IRQ}_3$, $\overline{IRQ}_4$, AEVL, AEVH, TMIC, TMIF, TMIG, $\overline{ADTRG}$, SCK_{32}	0.9 V_{CC}	—	V_{CC} + 0.3	V		
		$\overline{IRQ}_1$	0.9 V_{CC}	—	AV_{CC} + 0.3	V		

	473	Table amended

Item	Symbol	Applicable Pins	Values Min	Values Typ	Values Max	Unit	Test Condition	Notes
Subactive mode current dissipation	I_{SUB}	V_{CC}	—	10	—	μA	V_{CC} = 2.7 V, LCD on 32 kHz crystal resonator ($\phi_{SUB}=\phi_w/8$)	*3 *4 Reference value
			—	20	40	μA	V_{CC} = 2.7 V, LCD on 32 kHz External Clock ($\phi_{SUB}=\phi_w/2$)	*3 *4
			—	17	40	μA	V_{CC} = 2.7 V, LCD on 32 kHz crystal resonator ($\phi_{SUB}=\phi_w/2$)	
Subsleep mode current dissipation	I_{SUBSP}	V_{CC}	—	4.8	16.0	μA	V_{CC} = 2.7 V, LCD on 32 kHz External Clock ($\phi_{SUB}=\phi_w/2$)	*3 *4
			—	5.4	16.0	μA	V_{CC} = 2.7 V, LCD on 32 kHz crystal resonator ($\phi_{SUB}=\phi_w/2$)	

Item	Page	Revision (See Manual for Details)
16.4.2 DC Characteristics Table 16.8 DC Characteristics	474	Table amended

Item	Symbol	Applicable Pins	Values Min	Typ	Max	Unit	Test Condition	Notes
Watch mode current dissipation	I_{WATCH}	V_{CC}	—	2.0	—	μA	V_{CC} = 2.7 V, T_a = 25°C 32 kHz External Clock LCD not used	*3 *4 Reference value
			—	2.6	—	μA	V_{CC} = 2.7 V, T_a = 25°C 32 kHz crystal resonator LCD not used	
			—	2.0	6.0	μA	V_{CC} = 2.7 V, 32 kHz External Clock LCD not used	*3 *4
			—	2.6	6.0	μA	V_{CC} = 2.7 V, 32 kHz crystal resonator LCD not used	

16.4.7 Power Supply Characteristics	482	Newly added
16.6.2 DC Characteristics Table 16.16 DC Characteristics	487	Table amended

Item	Symbol	Applicable Pins	Values Min	Typ	Max	Unit	Test Condition	Notes
Input high voltage	V_{IH}	$\overline{RES}$, $\overline{WKP_6}$ to $\overline{WKP_7}$, $\overline{IRQ_0}$, $\overline{IRQ_3}$, $\overline{IRQ_4}$, AEVL, AEVH, TMIC, TMIF, TMIG, $\overline{ADTRG}$, SCK_{32}	0.9 V_{CC}	—	V_{CC} + 0.3	V		
		$\overline{IRQ_1}$	0.9 V_{CC}	—	AV_{CC} + 0.3	V		

Item	Page	Revision (See Manual for Details)
16.6.2 DC Characteristics	492	Table amended

Table 16.16 DC Characteristics

Item	Symbol	Applicable Pins	Values Min	Values Typ	Values Max	Unit	Test Condition	Notes
Subactive mode current dissipation	I_{SUB}	V_{CC}	—	6.2	—	μA	V_{CC} = 1.8 V, LCD on 32 kHz External Clock ($\phi_{SUB}=\phi_w/2$)	*1 *2 Reference value
			—	5.7	—	μA	V_{CC} = 1.8 V, LCD on 32 kHz crystal resonator ($\phi_{SUB}=\phi_w/2$)	
			—	4.4	—	μA	V_{CC} = 2.7 V, LCD on 32 kHz crystal resonator ($\phi_{SUB}=\phi_w/8$)	
			—	10	40	μA	V_{CC} = 2.7 V, LCD on 32 kHz External Clock ($\phi_{SUB}=\phi_w/2$)	*1 *2
			—	11	40	μA	V_{CC} = 2.7 V, LCD on 32 kHz crystal resonator ($\phi_{SUB}=\phi_w/2$)	
Subsleep mode current dissipation	I_{SUBSP}	V_{CC}	—	4.8	16.0	μA	V_{CC} = 2.7 V, LCD on 32 kHz External Clock ($\phi_{SUB}=\phi_w/2$)	*1 *2
			—	5.1	16.0	μA	V_{CC} = 2.7 V, LCD on 32 kHz crystal resonator ($\phi_{SUB}=\phi_w/2$)	
Watch mode current dissipation	I_{WATCH}	V_{CC}	—	1.2	—	μA	V_{CC} = 1.8 V, T_a = 25°C 32 kHz crystal oscillator LCD not used	*1 *2 Reference value
			—	2.0	—	μA	V_{CC} = 2.7 V, T_a = 25°C 32 kHz External Clock LCD not used	

	493	Table amended

Item	Symbol	Applicable Pins	Values Min	Values Typ	Values Max	Unit	Test Condition	Notes
Watch mode current dissipation	I_{WATCH}	V_{CC}	—	2.3	—	μA	V_{CC} = 2.7 V, T_a = 25°C 32 kHz crystal resonator LCD not used	*1 *2 Reference value
			—	2.0	6.0	μA	V_{CC} = 2.7 V, 32 kHz External Clock LCD not used	*1 *2
			—	2.3	6.0	μA	V_{CC} = 2.7 V, 32 kHz crystal resonator LCD not used	

Item	Page	Revision (See Manual for Details)
16.8.2 DC Characteristics Table 16.22 DC Characteristics	506	Table amended

Item	Symbol	Applicable Pins	Values Min	Typ	Max	Unit	Test Condition	Notes
Input high voltage	V_{IH}	$\overline{RES}$, $\overline{WKP_0}$ to $\overline{WKP_7}$, $\overline{IRQ_0}$, $\overline{IRQ_3}$, $\overline{IRQ_4}$, AEVL, AEVH, TMIC, TMIF, TMIG, ADTRG, SCK_{32}	$V_{CC} \times 0.8$	—	$V_{CC} + 0.3$	V	V_{CC} = 4.0 V to 5.5 V	
			$V_{CC} \times 0.9$	—	$V_{CC} + 0.3$		Other than above	
		$\overline{IRQ_1}$	$V_{CC} \times 0.8$	—	$AV_{CC} + 0.3$	V	V_{CC} = 4.0 V to 5.5 V	
			$V_{CC} \times 0.9$	—	$AV_{CC} + 0.3$		Other than above	

16.8.10 Power Supply Characteristics	525	Newly added
B.1 Addresses	548	Table amended

Lower Address	Register Name	Bit Names Bit 7	Bit 6	Bit 5	Bit 4	Bit 3	Bit 2	Bit 1	Bit 0	Module Name
H'AA	SCR3	TIE	RIE	TE	RE	—	TEIE	CKE1	CKE0	SCI3
H'AC	SSR	TDRE	RDRF	OER	FER	PER	TEND	—	—	

B.2 Functions 564 Figure amended

SMR—Serial Mode Register H'A8 SCI3

Bit	7	6	5	4	3	2	1	0
	COM	CHR	PE	PM	STOP	MP	CKS1	CKS0
Initial value	0	0	0	0	0	0	0	0
Read/Write	R/W	R/W	R/W	R/W	R/W	R/W	R/W	R/W

Clock Select

0	0	ϕ clock
0	1	$\phi_W/2$ clock
1	0	$\phi/16$ clock
1	1	$\phi/64$ clock

5 Bit Communication

0	5 bits communication disabled
1	5 bits communication enabled

Item	Page	Revision (See Manual for Details)
B.2 Functions	566	Figure amended

SCR3—Serial Control Register 3 H'AA SCI3

Bit	7	6	5	4	3	2	1	0
	TIE	RIE	TE	RE	—	TEIE	CKE1	CKE0
Initial value	0	0	0	0	0	0	0	0
Read/Write	R/W	R/W	R/W	R/W	R/W	R/W	R/W	R/W

Clock Enable

Bit 1	Bit 0	Description		
CKE1	CKE0	Communication Mode	Clock Source	SCK_{32} Pin Function
0	0	Asynchronous	Internal clock	I/O port
		Synchronous	Internal clock	Serial clock output
0	1	Asynchronous	Internal clock	Clock output
		Synchronous	Reserved (Do not specify this combination)	
1	0	Asynchronous	External clock	Clock input
		Synchronous	External clock	Serial clock input
1	1	Asynchronous	Reserved (Do not specify this combination)	
		Synchronous	Reserved (Do not specify this combination)	

Transmit End Interrupt Enable

0	Transmit end interrupt request (TEI) disabled
1	Transmit end interrupt request (TEI) enabled

	568	Figure amended

SSR—Serial Status Register H'AC SCI3

Bit	7	6	5	4	3	2	1	0
	TDRE	RDRF	OER	FER	PER	TEND	—	—
Initial value	1	0	0	0	0	1	0	0
Read/Write	R/(W)*	R/(W)*	R/(W)*	R/(W)*	R/(W)*	R	R	R/W

Appendix F Package Dimensions Figure F.1 FP-80A Package Dimensions	639	Figure replaced
Figure F.2 FP-80B Package Dimensions	640	Figure replaced
Figure F.3 TFP-80C Package Dimensions	641	Figure replaced

Item	Page	Revision (See Manual for Details)
Appendix F Package Dimensions Figure F.4 TLP-85V Package Dimensions	642	Figure replaced
Appendix I Specifications of Chip Tray Figure I.3 Specifications of Chip Tray for the HCD64338024S, HCD64338023S, HCD64338022S, HCD64338021S, and HCD64338020S	648	Figure replaced

Renesas 8-Bit Single-Chip Microcomputer
Hardware Manual
H8/38024, H8/38024S, H8/38024R, H8/38124 Group

Publication Date: 1st Edition, November, 2000
Rev.8.00, March 9, 2010
Published by: Sales Strategic Planning Div.
Renesas Technology Corp.
Edited by: Customer Support Department
Global Strategic Communication Div.
Renesas Solutions Corp.

© 2010. Renesas Technology Corp., All rights reserved. Printed in Japan.

Renesas Technology Corp. Sales Strategic Planning Div. Nippon Bldg., 2-6-2, Ohte-machi, Chiyoda-ku, Tokyo 100-0004, Japan

RENESAS SALES OFFICES

http://www.renesas.com

Refer to "**http://www.renesas.com/en/network**" for the latest and detailed information.

Renesas Technology America, Inc.
450 Holger Way, San Jose, CA 95134-1368, U.S.A
Tel: <1> (408) 382-7500, Fax: <1> (408) 382-7501

Renesas Technology Europe Limited
Dukes Meadow, Millboard Road, Bourne End, Buckinghamshire, SL8 5FH, U.K.
Tel: <44> (1628) 585-100, Fax: <44> (1628) 585-900

Renesas Technology (Shanghai) Co., Ltd.
Unit 204, 205, AZIACenter, No.1233 Lujiazui Ring Rd, Pudong District, Shanghai, China 200120
Tel: <86> (21) 5877-1818, Fax: <86> (21) 6887-7858/7898

Renesas Technology Hong Kong Ltd.
7th Floor, North Tower, World Finance Centre, Harbour City, Canton Road, Tsimshatsui, Kowloon, Hong Kong
Tel: <852> 2265-6688, Fax: <852> 2377-3473

Renesas Technology Taiwan Co., Ltd.
10th Floor, No.99, Fushing North Road, Taipei, Taiwan
Tel: <886> (2) 2715-2888, Fax: <886> (2) 3518-3399

Renesas Technology Singapore Pte. Ltd.
1 Harbour Front Avenue, #06-10, Keppel Bay Tower, Singapore 098632
Tel: <65> 6213-0200, Fax: <65> 6278-8001

Renesas Technology Korea Co., Ltd.
Kukje Center Bldg. 18th Fl., 191, 2-ka, Hangang-ro, Yongsan-ku, Seoul 140-702, Korea
Tel: <82> (2) 796-3115, Fax: <82> (2) 796-2145

Renesas Technology Malaysia Sdn. Bhd
Unit 906, Block B, Menara Amcorp, Amcorp Trade Centre, No.18, Jln Persiaran Barat, 46050 Petaling Jaya, Selangor Darul Ehsan, Malaysia
Tel: <603> 7955-9390, Fax: <603> 7955-9510

H8/38024, H8/38024S, H8/38024R, H8/38124 Group
Hardware Manual

Renesas Electronics Corporation
1753, Shimonumabe, Nakahara-ku, Kawasaki-shi, Kanagawa 211-8668 Japan

REJ09B0042-0800