National Semiconductor

June 2003

LM1238
110 MHz I²C Compatible RGB Preamplifier with Internal Simple OSD Generator and 4 DACs

General Description

The LM1238 pre-amp is an integrated, three channel video pre-amp. It has an I2C compatible interface which allows control of all the parameters necessary to directly setup and adjust the gain and contrast in the CRT display. Four I2C compatible DACs are available to control monitor bias and brightness circuits. The LM1238 preamp is designed to be 100% compatible with the LM246x high gain driver family and the LM2479/80 Clamp ICs.

Black level clamping of the video signal is carried out directly on the AC coupled input signal into the high impedance pre-amplifier inputs, eliminating the need for additional clamp capacitors. Horizontal and vertical blanking of the outputs is provided. Vertical blanking is optional and its duration is register programmable.

Features

- I²C compatible microcontroller interface
- Internal OSD generator with 16 sets of color icons
- OSD override allows OSD messages to be displayed while blanking input video
- Internally generated burn-in screen
- 4 DAC outputs (8-bit resolution) for bus controlled CRT bias and brightness
- Spot killer which blanks the video outputs when V_{CC} falls below the specified threshold
- Suitable for use with discrete or integrated clamp, with software configurable brightness mixer
- H and V blanking (V blanking is optional and has register programmable width)
- Power Saving Mode with 65% power reduction
- Matched to LM246x driver and 2479/80 clamp

Applications

- Low end 15" and 17" bus controlled monitors with OSD
- 1024x768 displays up to 85 Hz requiring OSD capability
- Very low cost systems with LM246x driver

Block and Connection Diagram

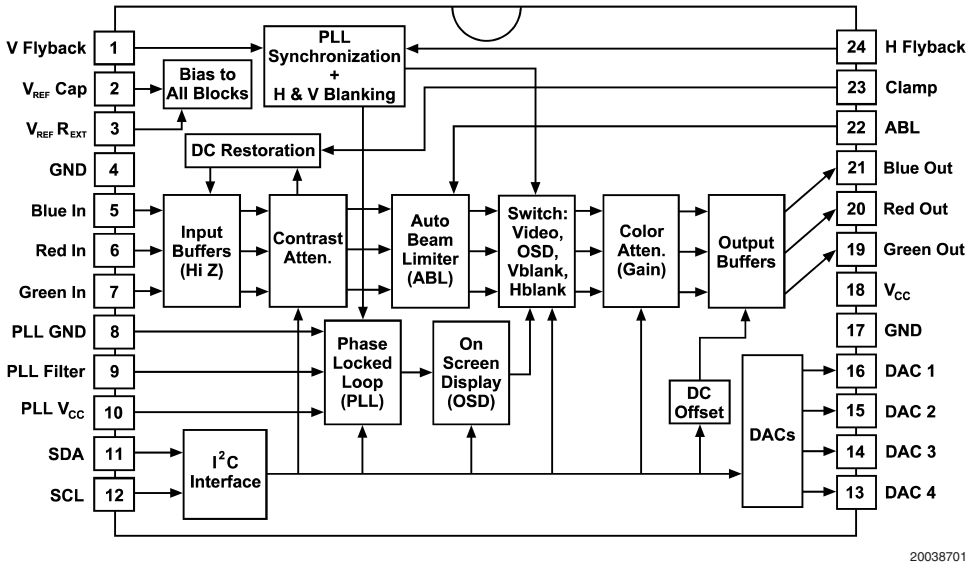

FIGURE 1. Order Number LM1238AAC/NA
See NS Package Number N24D

© 2003 National Semiconductor Corporation

Absolute Maximum Ratings (Notes 1, 3)

If Military/Aerospace specified devices are required, please contact the National Semiconductor Sales Office/ Distributors for availability and specifications.

Supply Voltage, Pins 15 and 19	6.0V
Peak Video DC Output Source Current (Any One Amp) Pins 18, 19 or 20	1.5 mA
Voltage at Any Input Pin (V_{IN})	V_{CC} +0.5 > V_{IN} > −0.5V
Thermal Resistance to Ambient (θ_{JA})	51˚C/W
Power Dissipation (P_D) (Above 25˚C Derate Based on θ_{JA} and T_J)	2.4W
Thermal Resistance to case (θ_{JC})	32˚C/W
Junction Temperature (T_J)	150˚C
ESD Susceptibility (Note 4)	3.5 kV
Video Inputs	$0.0V_{PP} < V_{IN} < 1.2V_{PP}$
ESD Machine Model (Note 13)	350V
Storage Temperature	−65˚C to +150˚C
Lead Temperature (Soldering, 10 sec.)	265˚C

Operating Ratings (Note 2)

Ambient Temperature Range	0˚C to +70˚C
Supply Voltage V_{CC}	4.75V < V_{CC} < 5.25V
Video Inputs	0 < V_{in} ≤ 1.0 V_{P-P}

Video Signal Electrical Characteristics

Unless otherwise noted: T_A = 25˚C, V_{CC} = +5.0V, V_{IN} = 0.70 V_{P-P}, V_{ABL} = V_{CC}, C_L = 8 pF, Video Outputs = 2.0 V_{P-P}. Setting numbers refer to the definitions in Table 1. See Note 7 for Min and Max parameters and Note 6 for Typicals.

Symbol	Parameter	Conditions	Min	Typ	Max	Units
I_S	Supply Current	Test Setting 1, both supplies, no output loading. See Note 8.		190	245	mA
I_{S-PS}	Supply Current, Power Save Mode	Test Setting 1, both supplies, no output loading. See Note 8.		60	82	mA
$V_{O\ BLK}$	Active Video Black Level Output Voltage	Test Setting 4, no AC input signal, DC offset (register 0x8438 set to 0xd5).		1.2		VDC
$V_{O\ BLK\ STEP}$	Active Video Black Level Step Size	Test Setting 4, no AC input signal.		100		mVDC
V_O Max	Maximum Video Output Voltage	Test Setting 3, Video in = 0.70 V_{P-P}	3.9	4.3		V
LE	Linearity Error	Test Setting 4, staircase input signal (see Note 9).		5		%
t_r	Video Rise Time	Note 5, 10% to 90%, Test Setting 4, AC input signal.		3.7		ns
OS_R	Rising Edge Overshoot	Note 5, Test Setting 4, AC input signal.		2		%
t_f	Video Fall Time	Note 5, 90% to 10%, Test Setting 4, AC input signal.		3.5		ns
OS_F	Falling Edge Overshoot	Note 5, Test Setting 4, AC input signal.		2		%
BW	Channel bandwidth (−3 dB)	Note 5, Test Setting 4, AC input signal.		110		MHz
V_{SEP} 10 kHz	Video Amplifier 10 kHz Isolation	Note 14, Test Setting 8.		−60		dB
V_{SEP} 10 MHz	Video Amplifier 10 MHz Isolation	Note 14, Test Setting 8.		−50		dB
A_V Max	Maximum Voltage Gain	Test Setting 8, AC input signal.	3.8	4.2		V/V
A_V C-50%	Contrast Attenuation @ 50%	Test Setting 5, AC input signal.		−5.2		dB
A_V Min/A_V Max	Maximum Contrast Attenuation in dB	Test Setting 2, AC input signal.		−20		dB
A_V G-50%	Gain Attenuation @ 50%	Test Setting 6, AC input signal.		−4.2		dB
A_V G-Min	Maximum Gain Attenuation	Test Setting 7, AC input signal.		−12		dB
A_V Match	Maximum Gain Match between channels	Test Setting 3, AC input signal.		±0.5		dB

Video Signal Electrical Characteristics (Continued)

Unless otherwise noted: T_A = 25˚C, V_{CC} = +5.0V, V_{IN} = 0.70 V_{P-P}, V_{ABL} = V_{CC}, C_L = 8 pF, Video Outputs = 2.0 V_{P-P}. Setting numbers refer to the definitions in Table 1. See Note 7 for Min and Max parameters and Note 6 for Typicals.

Symbol	Parameter	Conditions	Min	Typ	Max	Units
A_V Track	Gain Change between channels	Tracking when changing from Test Setting 8 to Test Setting 5. See Note 11.		±0.5		dB
V_{ABL} TH	ABL Control Range upper limit	Note 12, Test Setting 4, AC input signal.		4.8		V
V_{ABL} Range	ABL Gain Reduction Range	Note 12, Test Setting 4, AC input signal.		2.8		V
$A_{V\ 3.25}/A_{V\ Max}$	ABL Gain Reduction at 3.25V	Note 12, Test Setting 4, AC input signal. V_{ABL} = 3.25V		–3		dB
I_{ABL} Active	ABL Input bias current during ABL	Note 12, Test Setting 4, AC input signal. V_{ABL} = V_{ABL} MIN GAIN			10	µA
I_{ABL} Max	ABL input current sink capability	Note 12, Test Setting 4, AC input signal.			1.0	mA
V_{ABL} Max	Maximum ABL Input voltage during clamping	Note 12, Test Setting 4, AC input signal. I_{ABL} = I_{ABL} MAX			V_{CC} + 0.1	V
R_{IP}	Minimum Input resistance pins 5, 6, 7.	Test Setting 4.		20		MΩ

OSD Electrical Characteristics

Unless otherwise noted: T_A = 25˚C, V_{CC} = +5.0V. See Note 7 for Min and Max parameters and Note 6 for Typicals.

Symbol	Parameter	Conditions	Min	Typ	Max	Units
$V_{OSDHIGH}$ max	Maximum OSD Level with OSD Contrast 11	Palette Set at 111, OSD Contrast = 11, Test Setting 3		4.3		V
$V_{OSDHIGH}$ 10	Maximum OSD Level with OSD Contrast 10	Palette Set at 111, OSD Contrast = 10, Test Setting 3		3.8		V
$V_{OSDHIGH}$ 01	Maximum OSD Level with OSD Contrast 01	Palette Set at 111, OSD Contrast = 01, Test Setting 3		3.0		V
$V_{OSDHIGH}$ 00	Maximum OSD Level with OSD Contrast 00	Palette Set at 111, OSD Contrast = 00, Test Setting 3		2.3		V
ΔV_{OSD} (Black)	Difference between OSD Black Level and Video Black Level (same channel)	Register 08=0x18, Input Video = Black, Same Channel, Test Setting 8		20		mV
ΔV_{OSD} (White)	Output Match between Channels	Palette Set at 111, OSD Contrast = 11, Maximum difference between R, G and B		5		%
$V_{OSD\text{-}out}$ (Track)	Output Variation between Channels	OSD contrast varied from max to min		5		%

DAC Output Electrical Characteristics

Unless otherwise noted: T_A = 25˚C, V_{CC} = +5.0V, V_{IN} = 0.7V, V_{ABL} = V_{CC}, C_L = 8 pF, Video Outputs = 2.0 V_{P-P}. See Note 7 for Min and Max parameters and Note 6 for Typicals. DAC parameters apply to all 4 DACs.

Symbol	Parameter	Conditions	Min	Typ	Max	Units
$V_{Min\ DAC}$	Min output voltage of DAC	Register Value = 0x00		0.5	0.7	V
$V_{Max\ DAC}$ Mode 00	Max output voltage of DAC	Register Value = 0xFF, DCF[1:0] = 00b	3.5	4.2		V
$V_{Max\ DAC}$ Mode 01	Max output voltage of DAC in DCF mode 01	Register Value = 0xFF, DCF[1:0] = 01b	1.85	2.35		V
$\Delta V_{Max\ DAC}$ (Temp)	Variation in voltage of DAC with temperature	0 < T < 70˚C ambient		±0.5		mV/˚C

DAC Output Electrical Characteristics (Continued)

Unless otherwise noted: T_A = 25˚C, V_{CC} = +5.0V, V_{IN} = 0.7V, V_{ABL} = V_{CC}, C_L = 8 pF, Video Outputs = 2.0 V_{P-P}. See Note 7 for Min and Max parameters and Note 6 for Typicals. DAC parameters apply to all 4 DACs.

Symbol	Parameter	Conditions	Min	Typ	Max	Units
$\Delta V_{Max\ DAC}$ (V_{CC})	Variation in voltage of DAC with V_{CC}	4.75 < V_{CC} < 5.25V		±50		mV/V
Linearity	Linearity of DAC over its range			5		%
Monotonicity	Monotonicity of the DAC	Excluding dead zones		±0.5		LSB
I_{MAX}	Max Load Current		–1.0		1.0	mA

System Interface Signal Characteristics

Unless otherwise noted: T_A = 25˚C, V_{CC} = +5.0V, V_{IN} = 0.7V, V_{ABL} = V_{CC}, C_L = 8 pF, Video Outputs = 2.0 V_{P-P}. See Note 7 for Min and Max parameters and Note 6 for Typicals. DAC parameters apply to all 4 DACs.

Symbol	Parameter	Conditions	Min	Typ	Max	Units
V_{VTH+}	VFLYBACK positive switching guarantee.	Vertical Blanking triggered	2.0			V
V_{SPOT}	Spot Killer Voltage	Note 17, V_{CC} Adjusted to Activate	3.4	3.9	4.3	V
V_{Ref}	V_{Ref} Output Voltage		1.25	1.45	1.65	V
V_{IL} (SCL, SDA)	Logic Low Input Voltage		–0.5		1.5	V
V_{IH} (SCL, SDA)	Logic High Input Voltage		3.0		V_{CC} + 0.5	V
I_L (SCL, SDA)	Logic Low Input Current	SDA or SCL, Input Voltage = 0.4V		±10		µA
I_H (SCL, SDA)	Logic High Input Voltage	SDA or SCL, Input Voltage = 4.5V		±10		µA
V_{OL} (SCL, SDA)	Logic Low Output Voltage	I_O = 3 mA		0.5		V
f_H Min	Minimum Horizontal Frequency	PLL & OSD Operational; PLL Range = 0		25		kHz
f_H Max	Maximum Horizontal Frequency	PLL & OSD Operational; PLL Range = 3	100	110		kHz
$I_{HFB\ IN}$ Max	Horizontal Flyback Input Current	Absolute Maximum During Flyback			5	mA
I_{IN}	Peak Current during flyback	Design Value		4		mA
$I_{HFB\ OUT}$ Max	Horizontal Flyback Input Current	Absolute Maximum During Scan	–700			µA
I_{OUT}	Peak Current during Scan	Design Value		–550		µA
$I_{IN\ THRESHOLD}$	I_{IN} H-Blank Detection Threshold			0		µA
$t_{H\text{-}BLANK\ ON}$	H-Blank Time Delay - On	+ Zero crossing of I_{HFB} to 50% of output blanking start. I_{24} = +1.5mA		45		ns
$t_{H\text{-}BLANK\ OFF}$	H-Blank Time Delay - Off	– Zero crossing of I_{HFB} to 50% of output blanking end. I_{24} = –100µA		85		ns
V_{BLANK} Max	Maximum Video Blanking Level	Test Setting 4, AC input signal.	0		0.25	V
$f_{FREERUN}$	Free Run H Frequency, including H Blank			42		kHz
$t_{PW\ CLAMP}$	Minimum Clamp Pulse Width	See Note 15	200			ns
$V_{CLAMP\ MAX}$	Maximum Low Level Clamp Pulse Voltage	Video Clamp Functioning			2.0	V
$V_{CLAMP\ MIN}$	Minimum High Level Clamp Pulse Voltage	Video Clamp Functioning	3.0			V
I_{CLAMP} Low	Clamp Gate Low Input Current	V_{23} = 2V		–0.4		µA
I_{CLAMP} High	Clamp Gate High Input Current	V_{23} = 3V		0.4		µA
$t_{CLAMP\text{-}VIDEO}$	Time from End of Clamp Pulse to Start of Video	Referenced to Blue, Red and Green inputs	50			ns

Note 1: Limits of Absolute Maximum Ratings indicate below which damage to the device must not occur.

Note 2: Limits of operating ratings indicate required boundaries of conditions for which the device is functional, but may not meet specific performance limits.

Note 3: All voltages are measured with respect to GND, unless otherwise specified.

Note 4: Human body model, 100 pF discharged through a 1.5 kΩ resistor.

System Interface Signal Characteristics (Continued)

Note 5: Input from signal generator: t_r, t_f < 1 ns.

Note 6: Typical specifications are specified at +25˚C and represent the most likely parametric norm.

Note 7: Tested limits are guaranteed to National's AOQL; (Average Outgoing Quality Level).

Note 8: The supply current specified is the quiescent current for V_{CC} and 5V Dig with $R_L = \infty$. Load resistors are not required and are not used in the test circuit, therefore all the supply current is used by the pre-amp.

Note 9: Linearity Error is the maximum variation in step height of a 16 step staircase input signal waveform with a 0.7 V_{P-P} level at the input. All 16 steps equal, with each at least 100 ns in duration.

Note 10: dt/dV_{CC} = 200*(t5.5V–t4.5V)/ ((t5.5V + t4.5V)) %/V, where:

t5.5V is the rise or fall time at V_{CC} = 5.5V, and t4.5V is the rise or fall time at V_{CC} = 4.5V.

Note 11: ΔA_V track is a measure of the ability of any two amplifiers to track each other and quantifies the matching of the three gain stages. It is the difference in gain change between any two amplifiers with the contrast set to A_VC–50% and measured relative to the A_V max condition. For example, at A_V max the three amplifiers' gains might be 12.1 dB, 11.9 dB, and 11.8 dB and change to 2.2 dB, 1.9 dB and 1.7 dB respectively for contrast set to A_VC–50%. This yields a typical gain change of 10.0 dB with a tracking change of ±0.2 dB.

Note 12: ABL should provide smooth decrease in gain over the operational range of 0 dB to –5 dB

$\Delta A_{ABL} = A(V_{ABL} = V_{ABL\ MAX\ GAIN}) - A\ (V_{ABL} = V_{ABL\ MIN\ GAIN})$

Beyond –5 dB the gain characteristics, linearity and pulse response may depart from normal values.

Note 13: Machine Model ESD test is covered by specification EIAJ IC-121-1981. A 200 pF cap is charged to the specific voltage, then discharged directly into the IC with no external series resistor (resistance of discharge path must be under 50Ω).

Note 14: Measure output levels of the other two undriven amplifiers relative to the driven amplifier to determine channel separation. Terminate the undriven amplifier inputs to simulate generator loading. Repeat test at f_{IN} = 10 MHz for $V_{SEP\ 10\ MHZ}$.

Note 15: A minimum pulse width of 200 ns is the guaranteed minimum for a horizontal line of 15 kHz. This limit is guaranteed by design. If a lower line rate is used then a longer clamp pulse may be required.

Note 16: Adjust input frequency from 10 MHz (A_V max reference level) to the –3 dB corner frequency ($f_{-3\ dB}$).

Note 17: Once the spot killer has been activated, the LM1238 remains in the off state until V_{CC} is cycled (reduced below 0.5V and then restored to 5V).

Hexadecimal and Binary Notation

Hexadecimal numbers appear frequently throughout this document, representing slave and register addresses, and register values. These appear in the format "0x...". For example, the slave address for writing the registers of the LM1238 is hexadecimal BA, written as 0xBA. On the other hand, binary values, where the individual bit values are shown, are indicated by a trailing "b". For example, 0xBA is equal to 10111010b. A subset of bits within a register is referred to by the bit numbers in brackets following the register value. For example, the OSD contrast bits are the fourth and fifth bits of register 0x0818. Since the first bit is bit 0, the OSD contrast register is 0x0818[4:3].

Register Test Settings

Table 1 shows the definitions of the Test Settings 1–8 referred to in the specifications sections. Each test setting is a combination of five hexadecimal register values, Contrast, Gain (Blue, Red, Green) and DC offset.

TABLE 1. Test Setting Definitions

Control	No. of Bits	Test Settings							
		1	2	3	4	5	6	7	8
Contrast	7	0x7F (Max)	0x00 Min	0x7F (Max)	0x7F (Max)	0x40 (50.4%)	0x7F (Max)	0x7F (Max)	0x7F (Max)
B, R, G Gain	7	0x7F (Max)	0x7F (Max)	0x7F (Max)	Set V_O to 2 V_{P-P}	0x7F (Max)	0x40 (50%)	0x00 (Min)	0x7F (Max)
DC Offset	3	0x00 (Min)	0x05	0x07 (Max)	0x05	0x05	0x05	0x05	0x05

Typical Performance Characteristics

V_{CC} = 5V, T_A = 25˚C unless otherwise specified

SYSTEM INTERFACE SIGNALS

The Horizontal and Vertical Blanking and the Clamping input signals are important for proper functionality of the LM1238. Both blanking inputs must be present for OSD synchronization. In addition, the Horizontal blanking input also assists in setting the proper cathode black level, along with the Clamping pulse. The Vertical blanking input initiates a blanking level at the LM1238 outputs which is programmable from 3 to 127 lines (we recommend at least 10). This can be optionally disabled so there is no vertical blanking.

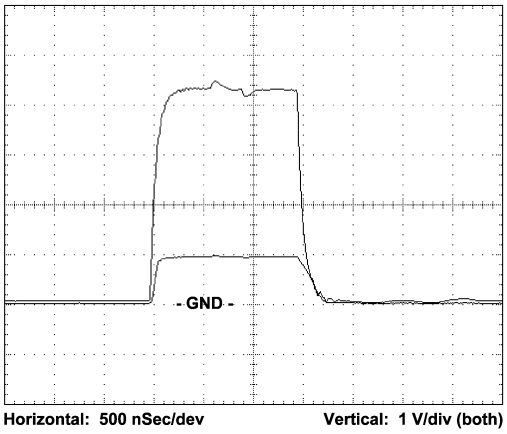

20038754

FIGURE 2. Logic Horizontal Blanking

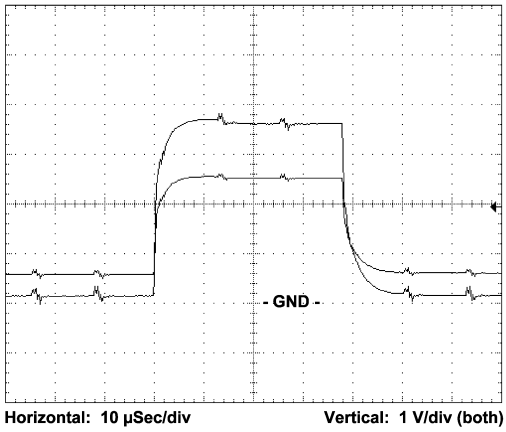

20038755

FIGURE 3. Logic Vertical Blanking

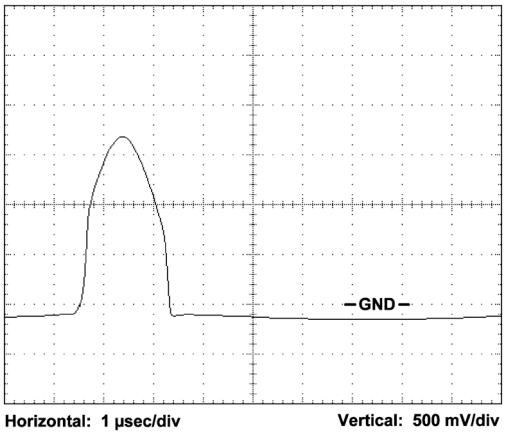

20038756

FIGURE 4. Deflection Horizonal Blanking

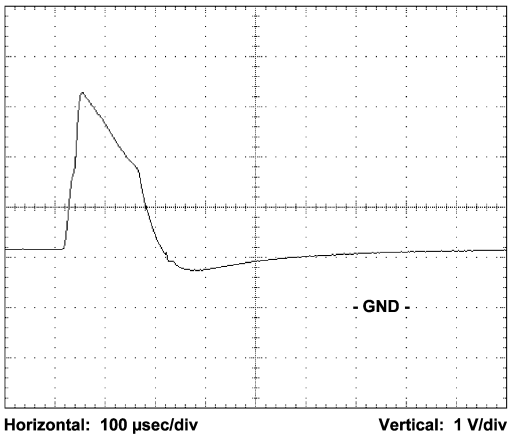

20038757

FIGURE 5. Deflection Vertical Blanking

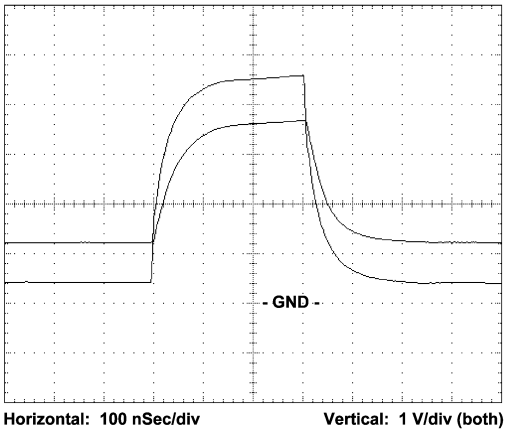

20038758

FIGURE 6. Logic Clamp Pulse

Typical Performance Characteristics V_{CC} = 5V, T_A = 25˚C unless otherwise specified (Continued)

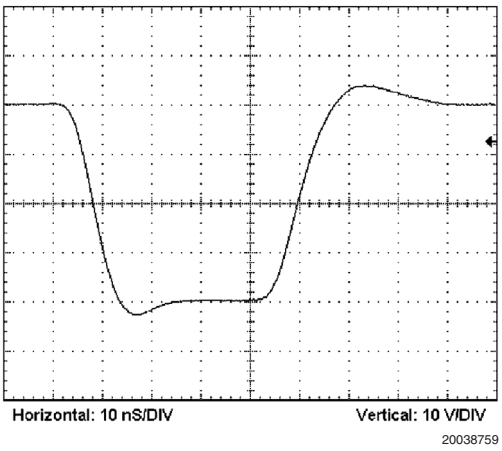

FIGURE 7. Red Cathode Response

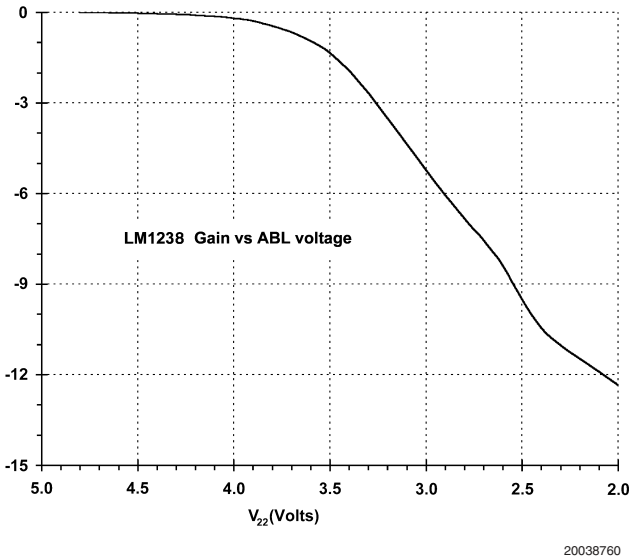

FIGURE 8. ABL Gain Reduction Curve

Figure 2 and *Figure 3* show the case where the Horizontal and Vertical inputs are logic levels. *Figure 2* shows the smaller pin 24 voltage superimposed on the horizontal blanking pulse input to the neck board with R_H = 4.7K and C_{17} = 0.1µF. Note where the voltage at pin 24 is clamped to about 1 volt when the pin is sinking current. *Figure 3* shows the smaller pin 1 voltage superimposed on the vertical blanking input to the neck board with C_4 jumpered and R_V = 4.7K.

Figure 4 and *Figure 5* show the case where the horizontal and vertical inputs are from deflection. *Figure 4* shows the pin 24 voltage which is derived from a horizontal flyback pulse of 35 volts peak to peak with R_H = 8.2K and C_{17} jumpered. *Figure 5* shows the pin 1 voltage which is derived from a vertical flyback pulse of 55 volts peak to peak with C_4 = 1500pF and R_V = 120K.

Figure 6 shows the pin 23 clamp input voltage superimposed on the neck board clamp logic input pulse. R_{31} = 1K and should be chosen to limit the pin 23 voltage to about 2.5V peak to peak. This corresponds to the application circuit given in *Figure 9*.

CATHODE RESPONSE

Figure 7 shows the response at the red cathode for the application circuit in *Figures 9, 10*. The input video risetime is 1.5 nanoseconds. The resulting leading edge has a 10.1 nanosecond risetime and a 8% overshoot, while the trailing edge has a 8.3 nanosecond risetime and a 2% overshoot with an LM2469 driver.

ABL GAIN REDUCTION

The ABL function reduces the contrast level of the LM1238 as the voltage on pin 22 is lowered from V_{CC} to around 2 volts. *Figure 8* shows the amount of gain reduction as the voltage is lowered from V_{CC} (5.0V) to 2V. The gain reduction is small until V_{22} reaches the knee anound 3.7V, where the slope increases. Many system designs will require about 3 to 5 dB of gain reduction in full beam limiting. Additional attenuation is possible, and can be used in special circumstances. However, in this case, video performance such as video linearity and tracking between channels will tend to depart from normal specifications.

OSD PHASE LOCKED LOOP

Table 2 shows the recommended horizontal scan rate ranges (in kHz) for each combination of PLL register setting, 0x081E [1:0], and the pixels per line register setting, 0x0802 [7:6]. While the OSD PLL may lock for other combinations, the performance of the loop will be improved if these recommendations are followed. NR means the combination of PLL and PPL is not recommended for any scan rate.

TABLE 2. OSD Register Recommendations

	Pixels per Line			
PLL Range	130	176	240	352
1	30-45	30-41	30-40	30-41
2	45-89	41-82	40-79	41-82
3	89-100	82-100	79-100	82-100

Pin Descriptions and Application Information

Pin No.	Pin Name	Schematic	Description
1	V Flyback	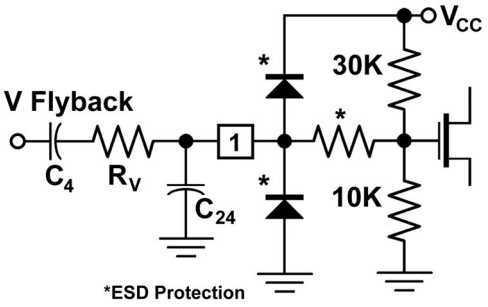	Required for OSD synchronization and is also used for vertical blanking of the video outputs. The actual switching threshold is about 35% of V_{CC}. For logic level inputs C_4 can be a jumper, but for flyback inputs, an AC coupled differentiator is recommended, where R_V is large enough to prevent the voltage at pin 1 from exceeding V_{CC} or going below GND. C_4 should be small enough to flatten the vertical rate ramp at pin 1. C_{24} may be needed to reduce noise.
2	V_{REF} Bypass	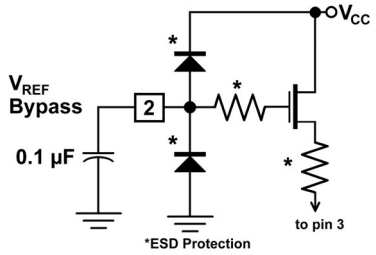	Provides filtering for the internal voltage which sets the internal bias current in conjunction with R_{EXT}. A minimum of 0.1 µF is recommended for proper filtering. This capacitor should be placed as close to pin 2 and the pin 4 ground return as possible.
3	V_{REF} Current Set	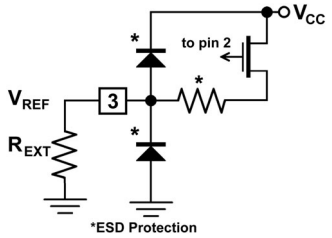	External resistor, 10k 1%, sets the internal bias current level for optimum performance of the LM1238. This resistor should be placed as close to pin 3 and the pin 4 ground return as possible.
4	Analog Ground	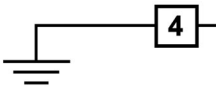	This is the ground for the analog portions of the LM1238 internal circuitry.
5 6 7	Blue Video In Red Video In Green Video In	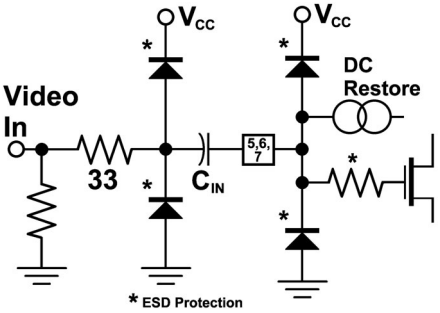	These video inputs must be AC coupled with a .0047 µF cap. Internal DC restoration is done at these inputs. A series resistor of about 33Ω and external ESD protection diodes should also be used for protection from ESD damage.
8 10	PLL Ground PLL V_{CC}	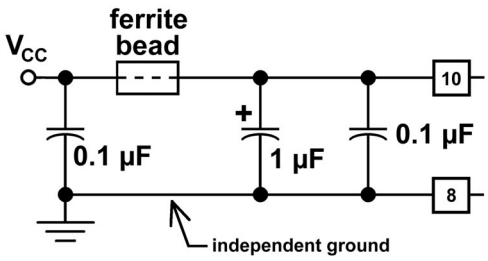	The ground pin should be connected to the rest of the circuit ground by a short but independent PCB trace to prevent contamination by extraneous signals. The V_{CC} pin should be isolated from the rest of the V_{CC} line by a ferrite bead and bypassed to pin 8 with an electrolytic capacitor and a high frequency ceramic.

Pin Descriptions and Application Information (Continued)

Pin No.	Pin Name	Schematic	Description
9	PLL Filter	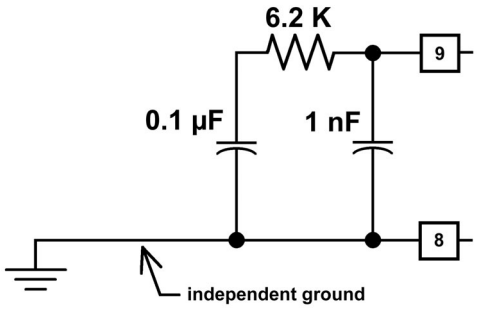	Recommended topology and values are shown to the left. It is recommended that both filter branches be bypassed to the independent ground as close to pin 8 as possible. Great care should be taken to prevent external signals from coupling into this filter from video, I^2C, etc.
11	SDA	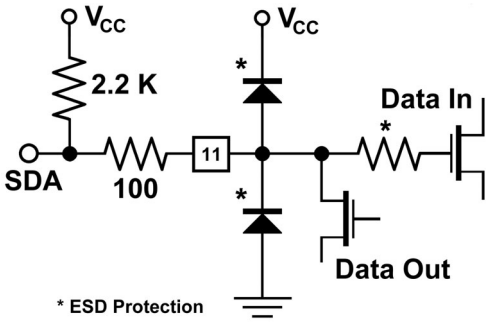	The I^2C compatible data line. A pull-up resistor of about 2 Kohms should be connected between this pin and V_{CC}. A resistor of at least 100Ω should be connected in series with the data line for additional ESD protection.
12	SCL	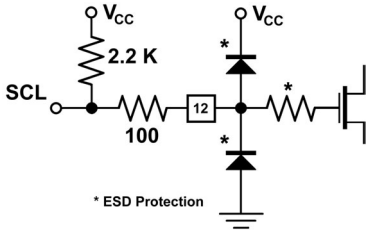	The I^2C compatible clock line. A pull-up resistor of about 2 kΩ should be connected between this pin and V_{CC}. A resistor of at least 100Ω should be connected in series with the clock line for additional ESD protection.
13 14 15 16	DAC 4 Output DAC 2 Output DAC 3 Output DAC 1 Output	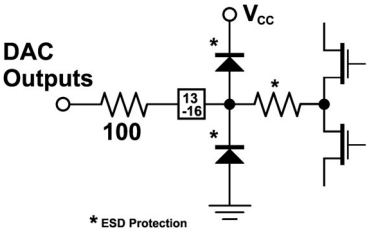	DAC outputs for cathode cut-off adjustments and brightness control. DAC 4 can be set to change the outputs of the other three DACs, acting as a brightness control. The DAC values and the special DAC 4 function are set through the I^2C compatible bus. A resistor of at least 100Ω should be connected in series with these outputs for additional ESD protection.
17 18	Ground V_{CC}	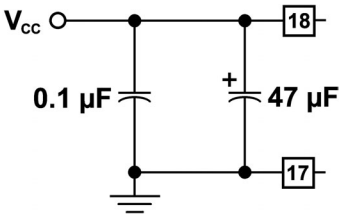	Ground pin for the digital portion of the LM1238 circuitry, and power supply pin for both analog and digital sections of the LM1238. Note the recommended charge storage and high frequency capacitors which should be as close to pins 17 and 18 as possible.
19 20 21	Green Output Red Output Blue Output	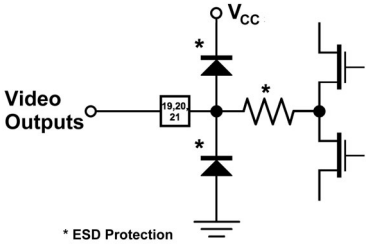	These are the three video output pins. They are intended to drive the LM246x family of cathode drivers. Nominally, about 2V peak to peak will produce 40V peak to peak of cathode drive.

Pin Descriptions and Application Information (Continued)

Pin No.	Pin Name	Schematic	Description
22	ABL	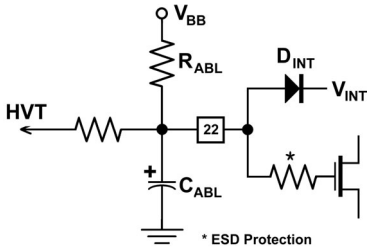	The Automatic Beam Limiter input is biased to the desired beam current limit by R_{ABL} and V_{BB} and normally keeps D_{INT} forward biased. When the current resupplying the CRT capacitance (averaged by C_{ABL}) exceeds this limit, then D_{INT} begins to turn off and the voltage at pin 22 begins to drop. The LM1238 then lowers the gain of the three video channels until the beam current reaches an equilibrium value.
23	CLAMP	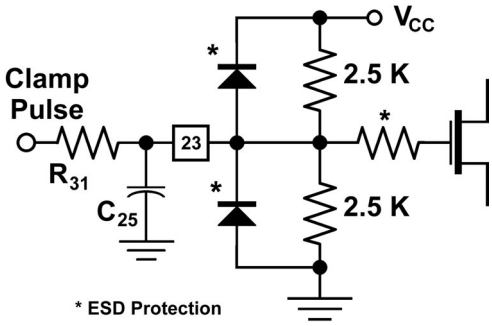	This pin accepts either TTL or CMOS logic levels. The internal switching threshold is approximately one-half of V_{CC}. An external series resistor, R_{31}, of about 1k is recommended to avoid overdriving the input devices. In any event, R_{EXT} must be large enough to prevent the voltage at pin 23 from going higher than V_{CC} or below GND.
24	H Flyback	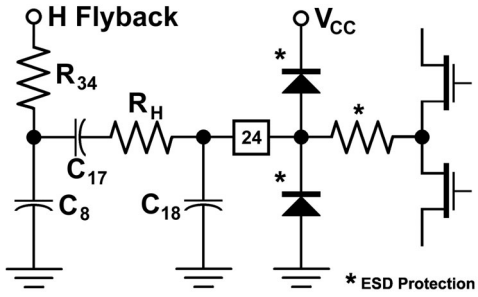	Proper operation requires current reversal. R_H should be large enough to limit the peak current at pin 24 to about +4 ma during blanking, and −500 µA during scan. C_{17} is usually needed for logic level inputs and should be large enough to make the time constant, R_HC_{17} significantly larger than the horizontal period. R_{34} and C_8 are typically 300 ohms and 330 pf when the flyback waveform has ringing and needs filtering. C_{18} may be needed to filter extraneous noise and can be up to 100 pF.

Schematic Diagram

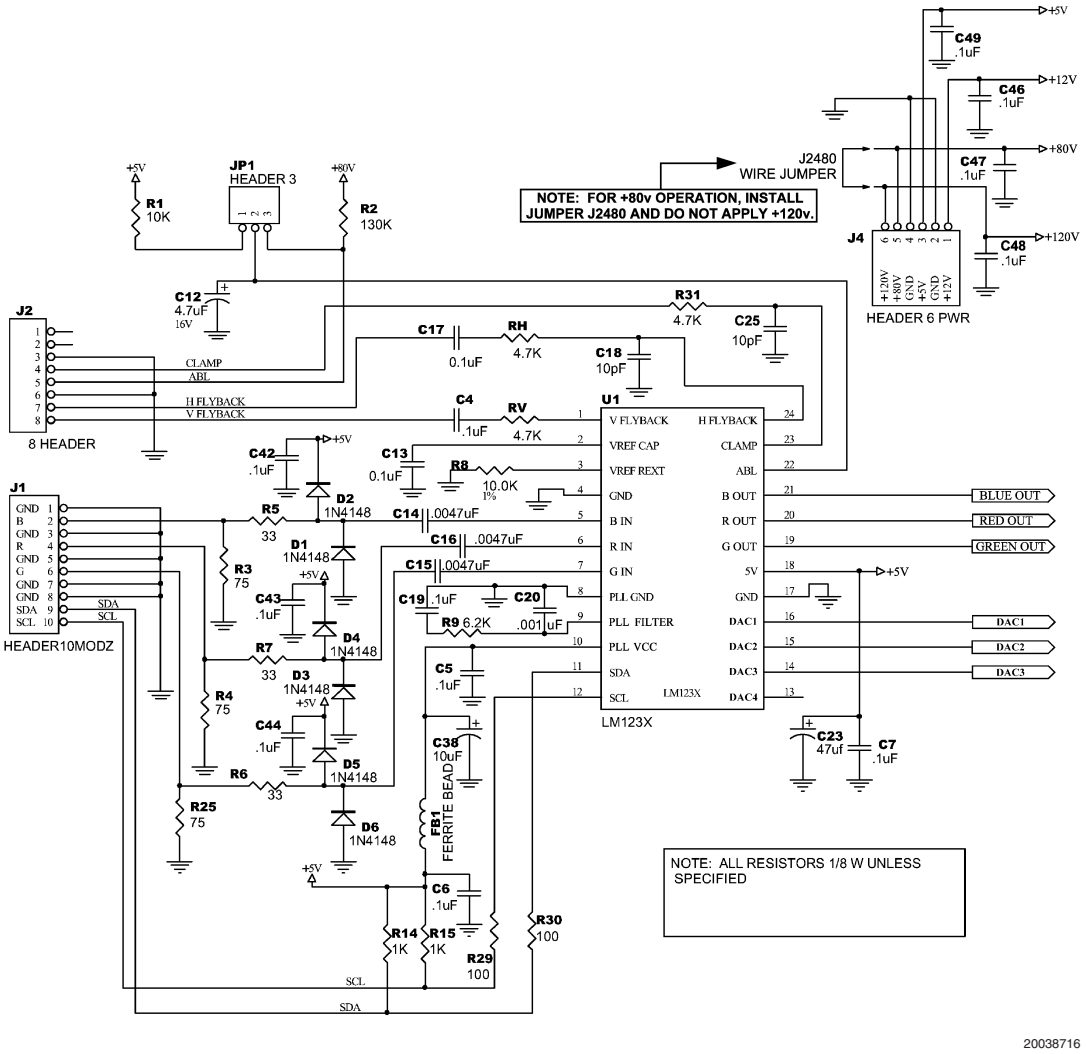

FIGURE 9. LM123x-LM246x Demo Board Schematic

Schematic Diagram

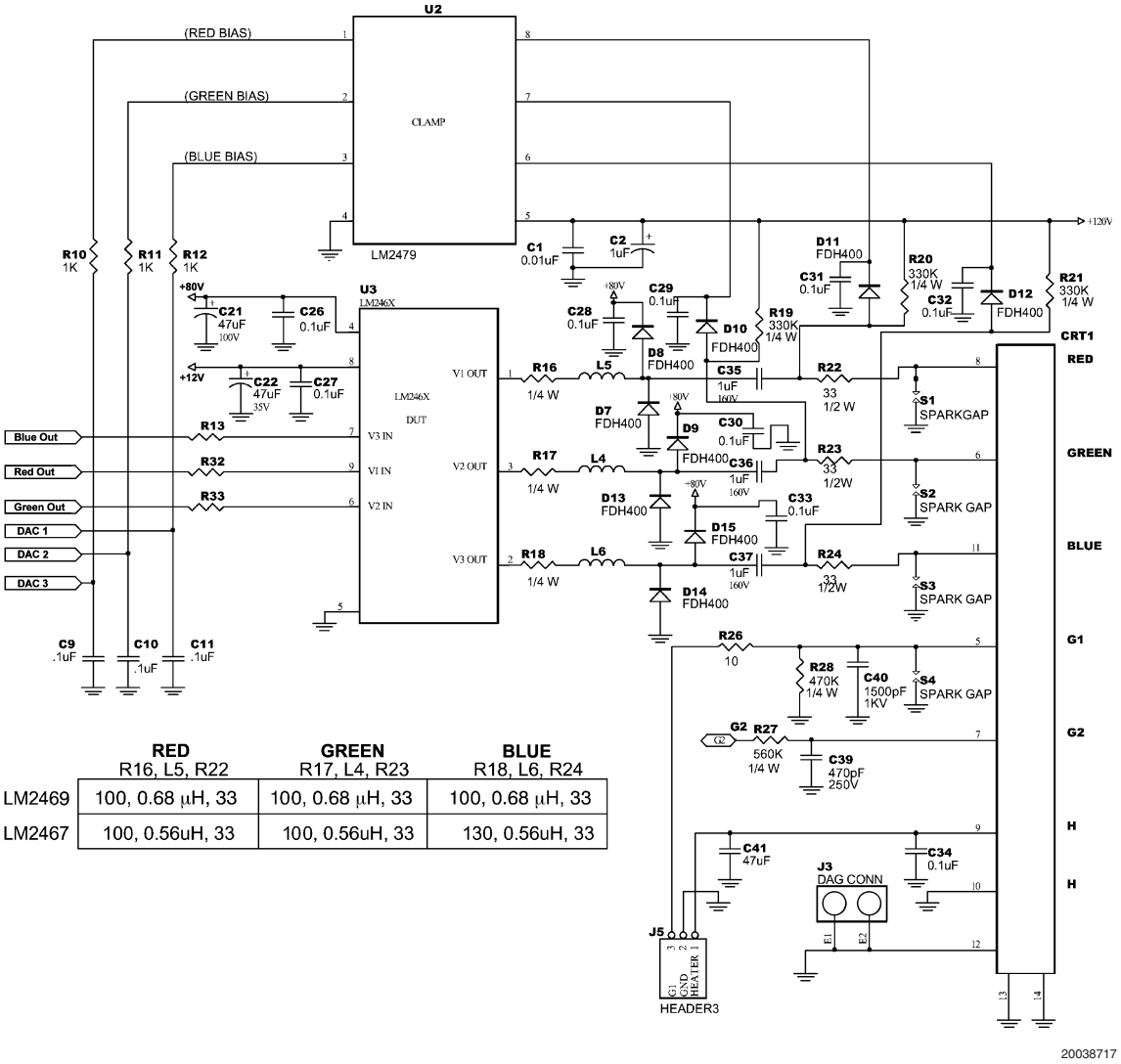

	RED R16, L5, R22	GREEN R17, L4, R23	BLUE R18, L6, R24
LM2469	100, 0.68 μH, 33	100, 0.68 μH, 33	100, 0.68 μH, 33
LM2467	100, 0.56uH, 33	100, 0.56uH, 33	130, 0.56uH, 33

FIGURE 10. LM123x-LM246x Demo Board Schematic (continued)

PCB Layout

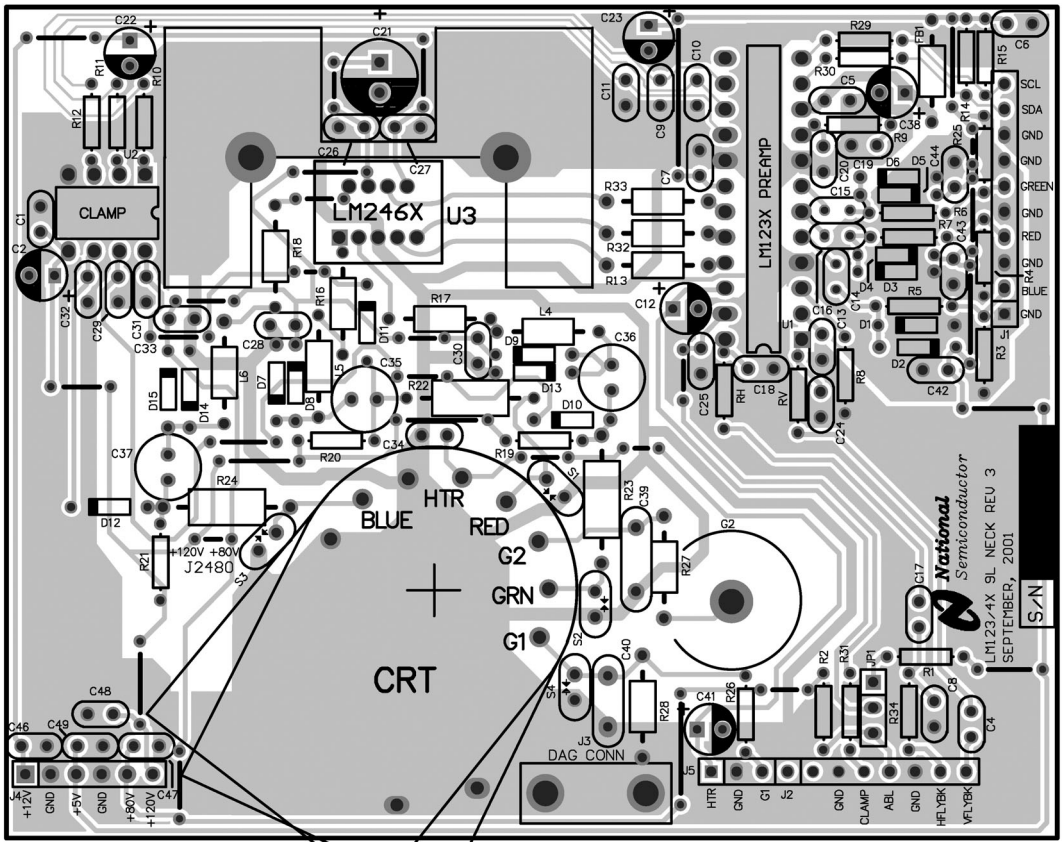

20038718

FIGURE 11. LM123x-LM246x Demo Board Layout

OSD Operation

The LM1238 is designed to enable ultra-low cost OSD operation in monitors that usually use a simple button + LED interface instead of OSD.

The basic screen is formed by a frame as shown in figure 12 below. The frame consists of a screen image with a bar graph beneath the image and an index pointer on the right hand side. This basic frame is common to all different views of the OSD. The blank 'screen image' of the screen in figure 12 is used to display one (or one set) of the available icons which would correspond to the adjustment being carried out. The available icons are shown in Figures 13 and 14. The 16 position index pointer is used to provide an indication of which icon set of the 16 available is currently displayed. The 16 icon sets can be arranged in any order. The bar graph is adjustable to 32 different lengths and can be used to indicate where the adjustment level is in the available adjustment range.

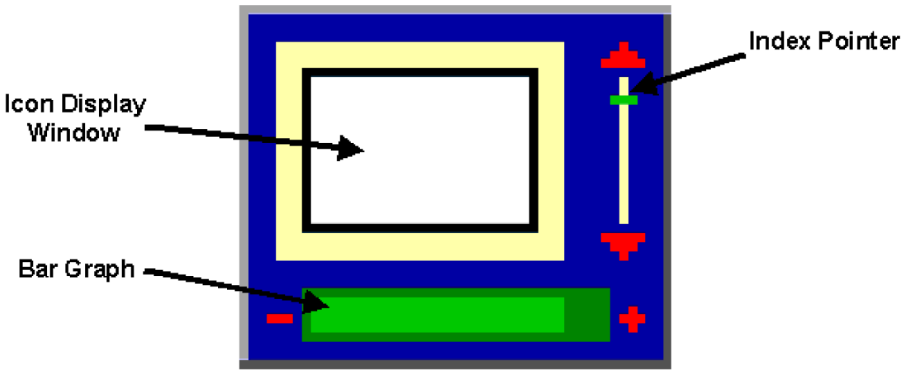

20038761

FIGURE 12. Basic OSD Frame

OSD MODES

Two modes of operation are available: alternating sequence and fixed icon. In the alternating sequence mode, the display will sequence through the three icons in the selected icon set. For example, if the color temperature icon set (Icon set 15) is selected, the icon display will sequence from the 9300 icon (Screen 0) to the 6500 icon (Screen 1) to the 5000 icon (Screen 2), then back to the 9300 icon (Screen 0). This sequence will be continuously repeated under hardware control. The rate of the sequence is controllable in increments of 8 frames of video by programming the lower 4 bits of control register 0x0804 via the I2C interface. The display is also capable of continuously displaying one of the three icons in the set by programming bits 4 and 5 of control register 0x0804.

OSD Constant Character Height Function

A constant height function is included in the LM1238 to maintain a constant OSD height as the number of horizontal image lines varies. Certain OSD character lines must be repeated in order to maintain a constant height as a percentage of the vertical image size. The constant character height function implements an approximation algorithm that determines which lines are repeated, and how many times each line is repeated. This will maintain a relatively constant height and position for the OSD window.

OSD SIZE AND POSITION

The size and position of the OSD is controlled by two registers. The available selections for horizontal size are 130, 176, 240, and 352 pixels per line. The horizontal position is controllable in 64 steps of 8 pixels. The start point is referenced to the horizontal blank pulse. The available selections for the vertical height of the OSD are 95, 130, 180, and 240 lines per field. The vertical position is adjustable in 64 increments of 8 OSD lines. The start point is referenced to the vertical blank pulse.

OSD Operation (Continued)

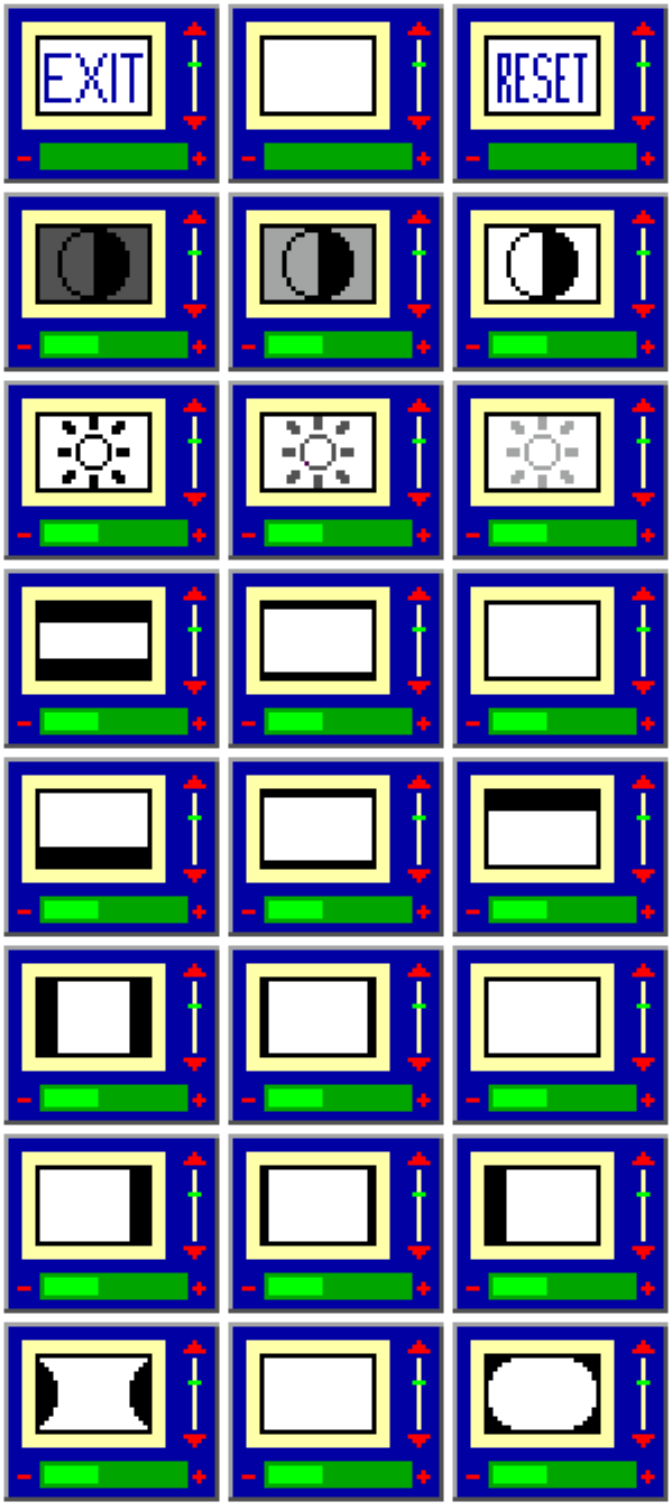

20038763

FIGURE 13. The First 8 Icon Sets (0-7)

OSD Operation (Continued)

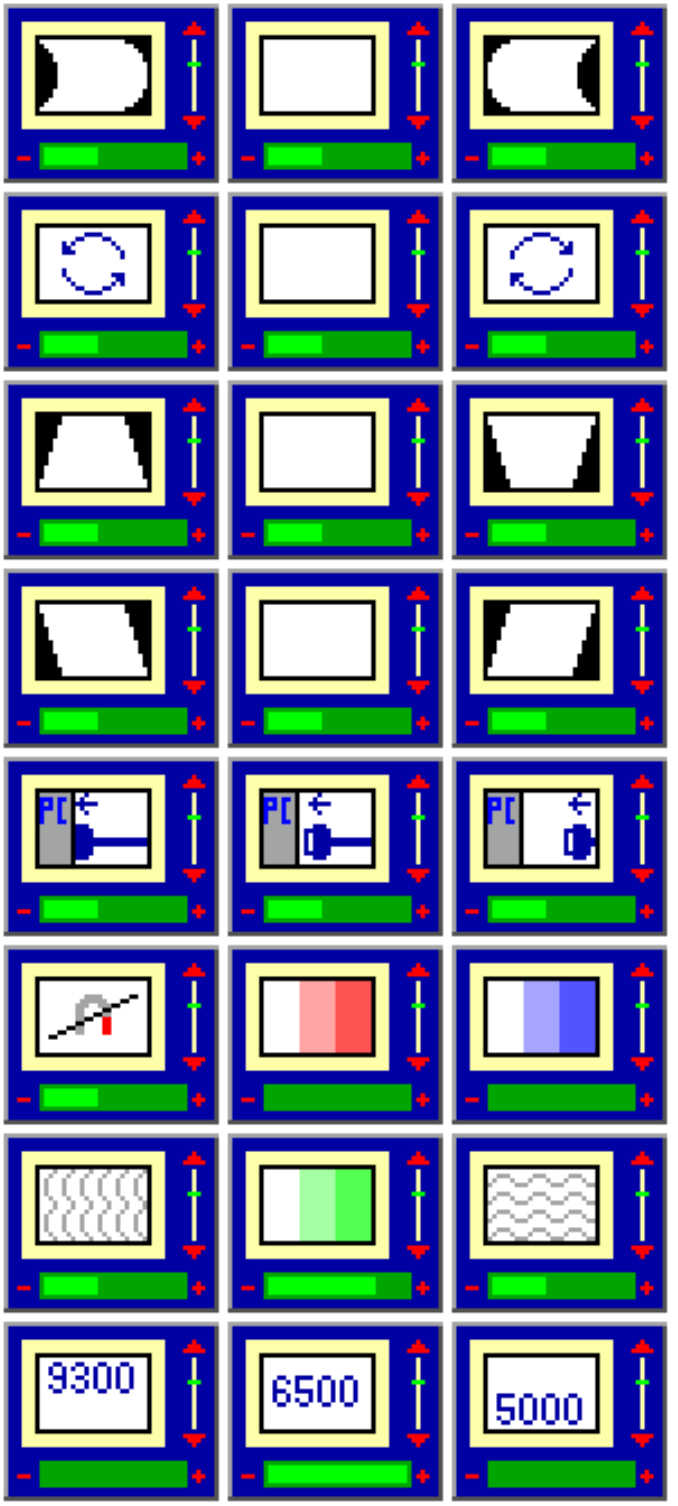

20038762

FIGURE 14. Last 8 Icon Sets (8-15)

Microcontroller Interface

The microcontroller interfaces to the LM1238 preamp via the I^2C compatible interface. The protocol of the interface begins with a Start Pulse followed by a byte comprised of a seven bit Slave Device Address and a Read/Write bit. Since the first byte is composed of both the address and the read/write bit, the address of the LM1238 for writing is 0xBA (10111010b) and the address for reading is 0xBB (10111011b). The development software provided by National Semiconductor will automatically take care of the difference between the read and write addresses if the target address under the communications tab is set to 0xBA. *Figure 15* and *Figure 16* show a write and read sequence on the I^2C compatible interface.

WRITE SEQUENCE

The write sequence begins with a start condition which consists of the master pulling SDA low while SCL is held high. The slave device address is next sent. The address byte is made up of an address of seven bits (7-1) and the read/write bit (0). Bit 0 is low to indicate a write operation. Each byte that is sent is followed by an acknowledge. When SCL is high the master will release the SDA line. The slave must pull SDA low to acknowledge. The register to be written to is next sent in two bytes, the least significant byte being sent first. The master can then send the data, which consists of one or more bytes. Each data byte is followed by an acknowledge bit. If more than one data byte is sent the data will increment to the next address location. See *Figure 15*.

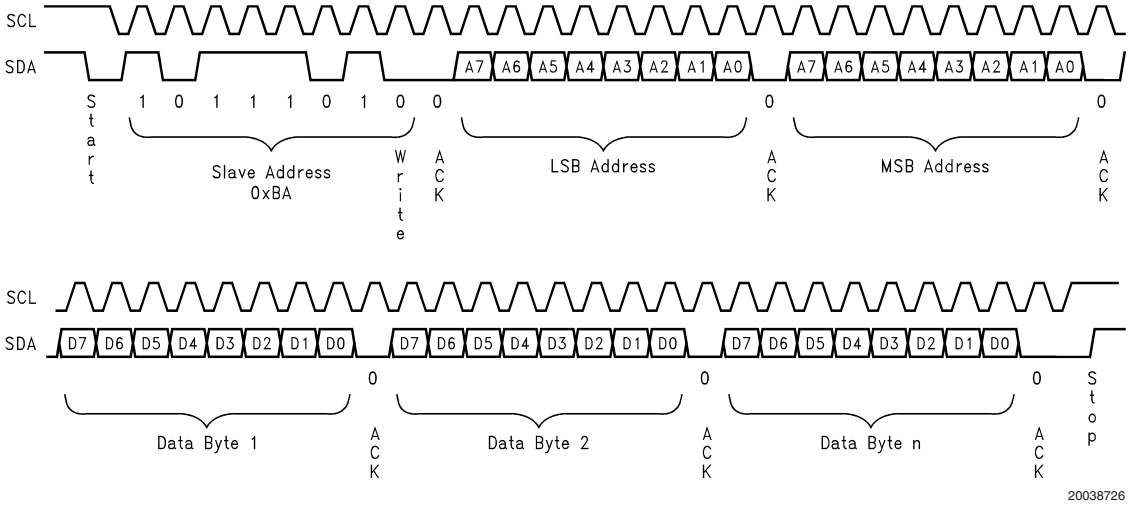

FIGURE 15. I^2C Compatible Write Sequence

READ SEQUENCE

Read sequences are comprised of two I^2C compatible transfer sequences: The first is a write sequence that only transfers the two byte address to be accessed. The second is a read sequence that starts at the address transferred in the previous address only write access and increments to the next address upon every data byte read. This is shown in *Figure 16*. The write sequence consists of the Start Pulse, the Slave Device Address, the Read/Write bit (a zero, indicating a write) and the Acknowledge bit; the next byte is the least significant byte of the address to be accessed, followed by its Acknowledge bit. This is then followed by a byte containing the most significant address byte, followed by its Acknowledge bit. Then a Stop bit indicates the end of the address only write access. Next the read data access will be performed beginning with the Start Pulse, the Slave Device Address, the Read/Write bit (a one, indicating a read) and the Acknowledge bit. The next 8 bits will be the read data driven out by the LM1238 preamp associated with the address indicated by the two address bytes. Subsequent read data bytes will correspond to the next increment address locations. Data should only be read from the LM1238 when both OSD windows are disabled.

Microcontroller Interface (Continued)

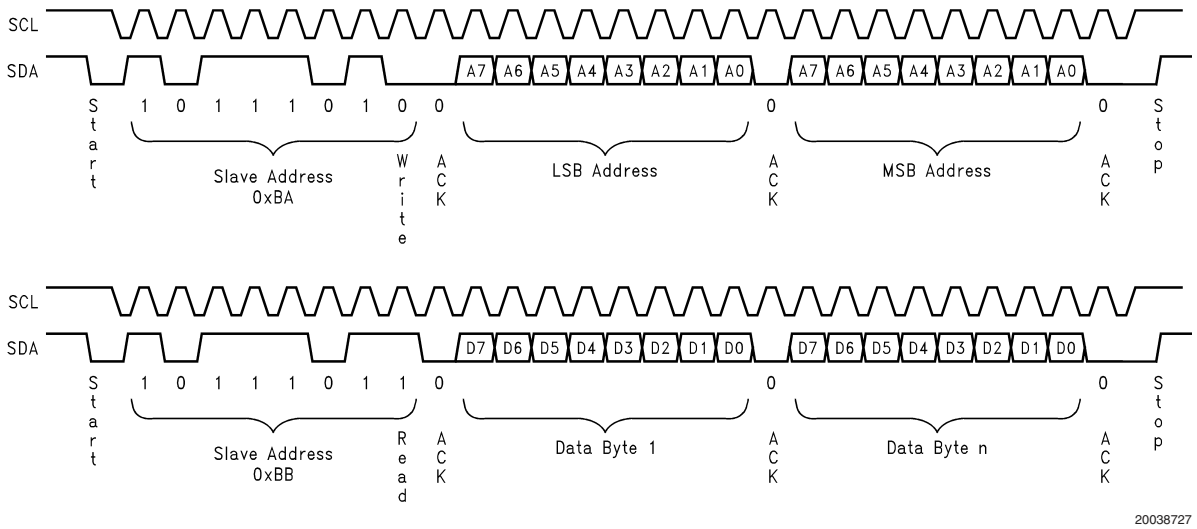

FIGURE 16. I²C Compatible Read Sequence

LM1238 Address Map

TABLE 3. I²C Address Space

Address Range	R/W	Description
0x0800h-0x0805h	R/W	OSD register set up data
0x0810h-0x081Fh	R/W	Preamp register set up data

Pre-Amp Interface I²C Registers

TABLE 4. LM1238 Pre-Amplifier Interface I²C Registers

Register	Address	Default	D7	D6	D5	D4	D3	D2	D1	D0
BGAINCTRL	0x0810	0xE0h	RSV	BGAIN[6:0]						
GGAINCTRL	0x0811	0xE0h	RSV	GGAIN[6:0]						
RGAINCTRL	0x0812	0xE0h	RSV	RGAIN[6:0]						
CONTRCTL	0x0813	0xE0h	RSV	CONTRAST[6:0]						
DAC2CTRL	0x0814	0x80h	DAC2[7:0]							
DAC3CTRL	0x0815	0x80h	DAC3[7:0]							
DAC1CTRL	0x0816	0x80h	DAC1[7:0]							
DAC4CTRL	0x0817	0x80h	DAC4[7:0]							
DCF/OSD-Con/DC	0x0818	0x94h*	RSV	DCONFIG[1..0]		OSD_CONT[1..0]		DC_OFFSET[2..0]		
GLOBALCTRL	0x0819	0x00h*	D_ID[5:0]						PS	BV
CLMP/PLL/VBL/OOR	0x81E	0x16h*	INT	NV	CLMP	FRE	OOR	VBL	PFR[1:0]	
SRTSTCTRL	0x81F	0x00h*	RSV	RSV	RSV	RSV	RSV	RSV	RSV	SRST

TABLE 5. OSD Interface I²C Registers

Register	Address	Default	D7	D6	D5	D4	D3	D2	D1	D0
BAR_CNTL	0x0800h	0x00h	BAR[4:0]					CNTL[2:0]		
ICN_INDX	0x0801h	0x00h	ICON[3:0]				INDEX[2:0]			
HORIZ	0x0802h	0xD0h	PPL[1:0]		HPOS[5:0]					
VERT	0x0803h	0xCCh	HT[1:0]		VPOS[5:0]					
ALT	0x0804h	0x04h	RSV	RSV	ASO1	ASO0	ALT[3:0]			
VERTBLNK	0x0805h	0x10h	RSV	VB[6:0]						

Control Register Definitions

OSD INTERFACE REGISTERS

Bar Indicator and OSD Interface Control Register (I²C address 0x0800h)

Register Name (address): BAR_CNTL (0x0800h)

7	6	5	4	3	2	1	0
BAR4	BAR3	BAR2	BAR1	BAR0	CNTL2	CNTL1	CNTL0

Bits 2–0 OSD Controls. These three bits turn on and off the OSD window and allow the up, down, left and right icons to be highlighted in color 1 out of the 8 colors available.

Note that when the highlight bits are turned on, the control codes will be reset to 001b, after 32 vertical field periods. Reading back the register more than 32 fields after a write to these bits will give 00 for the bits 1 and 2.

2	1	0	
0	0	0	Turn off OSD
0	0	1	Turn on OSD and normal button colors
0	1	0	Turn on OSD and highlight up arrow for 32 vertical periods.
1	0	0	Turn on OSD and highlight down arrow for 32 vertical periods.
0	1	1	Turn on OSD and highlight “+” for 32 vertical periods.

Control Register Definitions (Continued)

2	1	0	
1	1	1	Turn on OSD and highlight "–" for 32 vertical periods.

Bits 7–3 Bar Indicator. These five bits determine the length of the bar indicator on a scale of 0–31. A value of 0 results in no indicator. 31 results in a full scale indicator.

Icon Select and Index Position Register (I^2C address 0x0801h)

Register Name (address): ICN_INDX (0x0801h)

7	6	5	4	3	2	1	0
ICN3	ICN2	INC1	INC0	INDX3	INDX2	INDX1	INDX0

Bits 3–0 Index Pointer. These four bits determine the location of the pointer on a scale of 0–15. A value of 0 positions the pointer at the top. A value of 15 positions it at the bottom.

Bits 7–4 Icon Select. These four bits determine the icon set (0 through 15) that is displayed.

Horiz. Pixels Per Line and OSD Horiz. Position Register (I^2C address 0x0802h)

Register Name (address): HORIZ (0x0802h)

7	6	5	4	3	2	1	0
PPL1	PPL0	HPOS5	HPOS4	HPOS3	HPOS2	HPOS1	HPOS0

Bits 5–0 Horizontal Position. These six bits set the position of the image relative to the blanking pulse in increments of 8 pixels (i.e., one character cell).

Bits 7–6 Pixels Per Line. These two bits set the horizontal size of the image, in pixels per line.

TABLE 6. Pixels Per Line vs Register Value

Pixel Per Line Register Value	Pixels Per Line
00	130
01	176
10	240
11	352

OSD Vertical Height and Vertical Position Register (I^2C address 0x0803h)

Register Name (address): VERT (0x0803h)

7	6	5	4	3	2	1	0
HT1	HT0	VPOS5	VPOS4	VPOS3	VPOS2	VPOS1	VPOS0

Bits 5–0 Vertical Position. This six bit value sets the position of the image relative to the vertical blank pulse in increments of 8 OSD lines (one character cell height).

Bits 7–6 Vertical Height. This two bit value sets the nominal height of the OSD by controlling the average number of OSD lines per frame.

TABLE 7. OSD Lines Per Field vs Vertical Height Register

Vertical Height Register Value	OSD Lines Per Field
00	95
01	130
10	180
11	260

Control Register Definitions (Continued)

Icon Alternate Period Control Register (I^2C address 0x0804h)

Register Name (address): ALT (0x0804h)

7	6	5	4	3	2	1	0
RSV	RSV	ASO1	ASO0	ALT3	ALT2	ALT1	ALT0

Bits 3–0 Icon Alternate Period. These four bits set the period at which the icon will switch between images, in increments of eight vertical fields.

Bits 5–4 Alternate Sequence Override. These two bits enable the automatic alternating sequence of icons, or allow the icon to be set to one of the three alternative screens.

TABLE 8. Alternating Icon Sequence Override

Sequence Override Register Value	Effect
00	Automatic Alternating Sequence
01	Set for Icon Screen 0
10	Set for Icon Screen 1
11	Set for Icon Screen 2

Bits 7–6 Reserved.

Vertical Blank Duration Control Register (I^2C address 0x0805h)

Register Name (address): VERTBLNK (0x0805h)

7	6	5	4	3	2	1	0
RSV	VB6	VB5	VB4	VB3	VB2	VB1	VB0

Bits 6–0 Vertical Blank Duration. These seven bits set the duration of the VBLANK signal in numbers of horizontal scans.

Bit 7 Reserved.

PRE-AMPLIFIER INTERFACE REGISTERS

Blue Channel Gain Control Register (I^2C address 0x0810h)

Register Name (address): BGAINCTRL (0x0810h)

7	6	5	4	3	2	1	0
RSV	BG	BG	BG	BG	BG	BG	BG

Bits 6–0 Blue Channel Gain Control. These seven bits determine the gain for the Blue Channel.

Bit 7 Reserved.

Green Channel Gain Control Register (I^2C address 0x0811h)

Register Name (address): GGAINCTRL1 (0x0811h)

7	6	5	4	3	2	1	0
RSV	GG	GG	GG	GG	GG	GG	GG

Bits 6–0 Green Channel Gain Control. These seven bits determine the gain for the Green Channel.

Bit 7 Reserved.

Red Channel Gain Control Register (I^2C address 0x0812h)

Register Name (address): RGAINCTRL1 (0x0812h)

7	6	5	4	3	2	1	0
RSV	RG	RG	RG	RG	RG	RG	RG

Bits 6–0 Red Channel Gain Control. These seven bits determine the gain for the Red Channel.

Bit 7 Reserved.

Control Register Definitions (Continued)

Contrast Control Register (I^2C address 0x0813h)

Register Name (address): CONTRCTRL (0x0813h)

7	6	5	4	3	2	1	0
RSV	CO	CG	CG	CG	CG	CG	CG

Bits 6–0 Contrast Gain Control. These seven bits determine the overall gain of all the three channels.

Bit 7 Reserved.

DAC2 Register (I^2C address 0x0814h)

Register Name (address): DAC2CTRL (0x0814h)

7	6	5	4	3	2	1	0
D2–7	D2–6	D2–5	D2–4	D2–3	D2–2	D2–1	D2–0

Bits 7–0 These bits determine the output voltage of DAC2.

DAC3 Register (I^2C address 0x0815h)

Register Name (address): DAC3CTRL (0x0815h)

7	6	5	4	3	2	1	0
D3–7	D3–6	D3–5	D3–4	D3–3	D3–2	D3–1	D3–0

Bits 7–0 These bits determine the output voltage of DAC3.

DAC1 Register (I^2C address 0x0816h)

Register Name (address): DAC1CTRL (0x0816h)

7	6	5	4	3	2	1	0
D1–7	D1–6	D1–5	D1–4	D1–3	D1–2	D1–1	D1–0

Bits 7–0 These bits determine the output voltage of DAC1.

DAC4 Register (I^2C address 0x0817h)

Register Name (address): DAC4CTRL (0x0817h)

7	6	5	4	3	2	1	0
D4–7	D4–6	D4–5	D4–4	D4–3	D4–2	D4–1	D4–0

Bits 7–0 These bits determine the output voltage of DAC4.

DCoffset/OSD Contrast/DAC Configuration Control Register (I^2C address 0x0818h)

Register Name (address): DCF/OSD_CON/DC (0x0818h)

7	6	5	4	3	2	1	0
RSV	DCF1	DCF0	OSD	OSD	DC2	DC1	DC0

Bits 2–0 DC Offset Control. These three bits determine the active video DC offset to all three channels.

Bits 4–3 OSD Contrast Control. These two bits determine the contrast level of the OSD information.

Bit 5 DAC1–3 Configuration. When this bit is a 0 (default) the DAC outputs of DAC1–3 are full scale (0.5V–4.5V). When this bit is 1, the range of DAC1–3 are halved (0.5V–2.5V).

Bit 6 DAC4 Configuration. When this bit is a 0 (default), the DAC4 output is not mixed with the other DAC outputs. When the bit is one, 50% of the DAC4 output is added to DAC1–3.

Bit 7 Reserved.

Control Register Definitions (Continued)

Global Video Control Register (I^2C address 0x0819h)

Register Name (address): GLOBALCTRL (0x0819h)

7	6	5	4	3	2	1	0
D_ID5	D_ID4	D_ID3	D_ID2	D_ID1	D_ID0	PS	BV

Bit 0 Blank Video. When this bit is a one, blank the video output. When this bit is a zero allow normal video out. This register bit is OR'd with the other video blank signals, both active and static, and sent to the preamplifier as BLANK_OUT.

Bit 1 Power Save. When this bit is a one, shut down the analog circuits to support sleep mode. When this bit is a zero (default) enable the analog circuits for normal operation. This register bit is fed to the preamplifier interface as PWR_SAVE so that the amplifier can be put in to low power sleep mode. It is also OR'd with the blanking signals to blank the video.

Bits 7–2 Die ID. These bits are read only masked so that they can be assigned a value to differentiate between masked dies and die revisions.

PLL Range Register (I^2C address 0x081Eh)

Register Name (address): CLMP/PLL/VBL/OOR (0x081Eh)

7	6	5	4	3	2	1	0
INT	BIS	CLMP	FRE	OOR	VBL	PFR1	PFR0

Bits 1–0 PLL Frequency Range Control. These bits assist the PLL in locking to the desired pixel frequency. They are set based upon the nominal desired horizontal frequency range as per the PLL section. These bits, PFR0,1 are presented at the PLL interface as the signals 'Free_run_freq0', and 'Free_run_freq1'.

Bit 2 Vertical Blank Disable. When this bit is set to 0, the internally generated vertical blanking pulse is OR'd with the horizontal blank pulse internal to the logic core, to blank the video during retrace. When this bit is set to 1 (default) the internal vertical blanking is disabled.

Bit 3 OSD Override. When this bit is 0 (default) normal video operation is assumed. When this bit is 1, the OSD select is overridden, and OSD only is selected, preventing normal video from being displayed (used for 'out-of-range' condition).

Bit 4 Free Run Enable. When this bit is set to 0 (default), the PLL will be supplied with the H flyback synchronization pulse. When set to 1, the H flyback pulse will be gated off.

Bit 5 Clamp Polarity. Determines the polarity of the clamp signal used by the LM1238. When this bit is 0 (default) the LM1238 requires a positive clamp signal. When this bit is 1, the LM1238 requires a negative going clamp signal.

Bit 6 Burn-in Screen Enable (BIS). When this bit is a '1', the burn-in screen is active and input video will be ignored. When this bit is a '0' (default), the burn-in screen is disabled.

Bit 7 Interface. When this bit is set to 1, the jitter reduction circuit is set to alternate the phase every alternate field. When it is set to 0 (default), normal progressive scan is assumed.

Software Reset and Test Control Register (I^2C address 0x081Fh)

Register Name (address): SRTSTCTRL (0x081Fh)

7	6	5	4	3	2	1	0
RSV	RSV	RSV	RSV	RSV	RSV	RSV	SRST

Bit 0 Software Reset. Setting this bit causes a software reset. All registers (except this one) are loaded with their default values. All operations currently in progress are aborted (except for I^2C transactions). This bit automatically clears itself when the reset has been completed.

Bits 1–7 Reserved.

Physical Dimensions inches (millimeters) unless otherwise noted

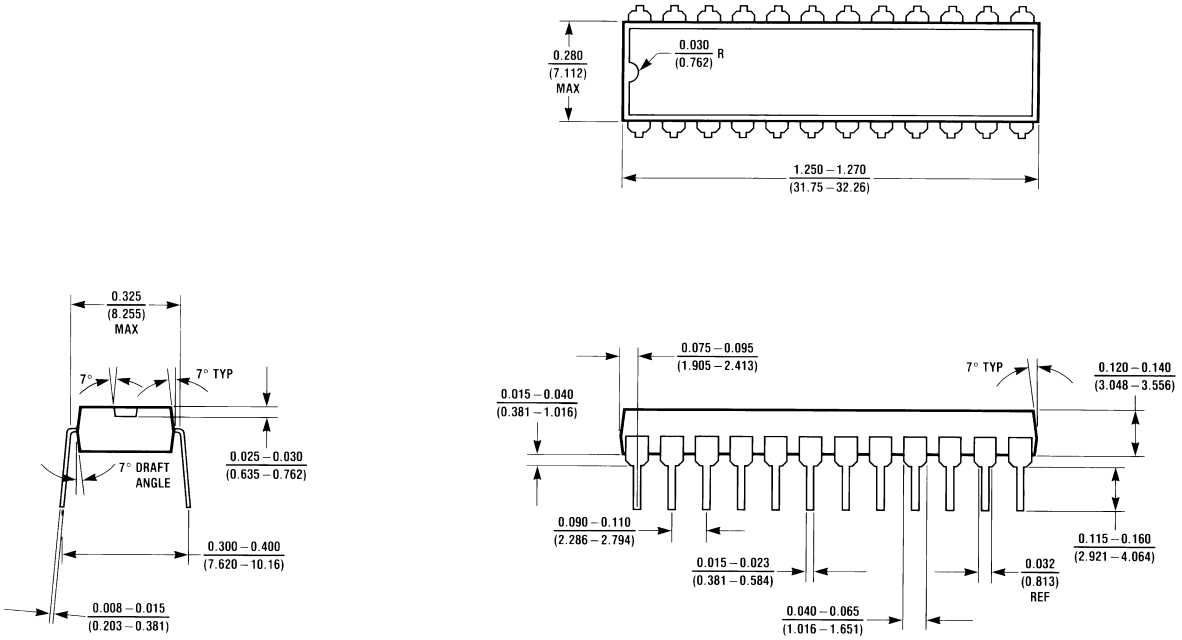

LIFE SUPPORT POLICY

NATIONAL'S PRODUCTS ARE NOT AUTHORIZED FOR USE AS CRITICAL COMPONENTS IN LIFE SUPPORT DEVICES OR SYSTEMS WITHOUT THE EXPRESS WRITTEN APPROVAL OF THE PRESIDENT AND GENERAL COUNSEL OF NATIONAL SEMICONDUCTOR CORPORATION. As used herein:

1. Life support devices or systems are devices or systems which, (a) are intended for surgical implant into the body, or (b) support or sustain life, and whose failure to perform when properly used in accordance with instructions for use provided in the labeling, can be reasonably expected to result in a significant injury to the user.
2. A critical component is any component of a life support device or system whose failure to perform can be reasonably expected to cause the failure of the life support device or system, or to affect its safety or effectiveness.

National Semiconductor
Americas Customer
Support Center
Email: new.feedback@nsc.com
Tel: 1-800-272-9959

www.national.com

National Semiconductor
Europe Customer Support Center
Fax: +49 (0) 180-530 85 86
Email: europe.support@nsc.com
Deutsch Tel: +49 (0) 69 9508 6208
English Tel: +44 (0) 870 24 0 2171
Français Tel: +33 (0) 1 41 91 8790

National Semiconductor
Asia Pacific Customer
Support Center
Email: ap.support@nsc.com

National Semiconductor
Japan Customer Support Center
Fax: 81-3-5639-7507
Email: jpn.feedback@nsc.com
Tel: 81-3-5639-7560

National does not assume any responsibility for use of any circuitry described, no circuit patent licenses are implied and National reserves the right at any time without notice to change said circuitry and specifications.