austriamicrosystems AG

is now

ams AG

The technical content of this austriamicrosystems datasheet is still valid.

Contact information:

Headquarters:
ams AG
Tobelbaderstrasse 30
8141 Unterpremstaetten, Austria
Tel: +43 (0) 3136 500 0
e-Mail: ams_sales@ams.com

Please visit our website at **www.ams.com**

AS8002

Solar Photovoltaic Inverter Measurement IC with Fast Over Current Detection

1 General Description

Power inverters in solar photovoltaic systems are often connected directly to the electricity grid in order to inject the created energy into the mains and act as an electricity supplier. This energy must comply with certain regulations that set the standard in terms of quality and safety which requires of accurate measurements.

The AS8002 is a highly accurate measurement IC that allows monitoring the generated energy with low cost shunt resistors or other sensors for the current and resistor dividers for the voltage.

This approach allows avoiding more expensive sensing devices while achieving the required accuracy for DC and AC measurements of current and voltage, as well as stability over the operating temperature range of the inverter.

The 12-bit ADC samples the voltage and current and provides their instantaneous values through an SPI interface.

The 12-bit ADC is preceded by low noise programmable gain amplifiers in order to accommodate different sensors.

The ADC has three multiplexed inputs, offering one secondary channel in addition to the main voltage and current.

The on-chip temperature sensor provides the inverter designer the option of temperature compensation for any of the measured parameters or functional blocks provided, over the full operating temperature range of the device.

The on-chip voltage reference is connected to the ADC and to REF.

An external crystal oscillator is not required as a high accuracy internal oscillator clock is available.

The independent over current interrupt detects a high current on the grid and allows the processor to open the switches without waiting for the ADC conversion.

2 Key Features

- 12-Bit 100 kSPS ADCs for accurate voltage and current measurement
- Programmable gain amplifiers to accommodate for different sensors
- Three multiplexed inputs to the 12-Bit ADC for secondary measurements that require high accuracy and fast sampling rates
- On chip temperature sensor connected to one of the inputs of the multiplexer
- On-chip voltage reference with small temperature coefficient (10ppm/K typ). This reference is available at the pin REF.
- Low power on chip oscillator
- SPI compatible interface
- Internal registers for easy offset and gain compensation
- Interrupt alerts (including Under Voltage Lock-Out and Over Temperature)
- Independent programmable over current interrupt

3 Applications

The AS8002 is suitable for PV inverter grid monitoring, Wind inverter grid monitoring, Isolated voltage sensing, Uninterruptible Power supplies and Power conditioners.

ams AG
Technical content still valid

Figure 1. AS8002 Block Diagram

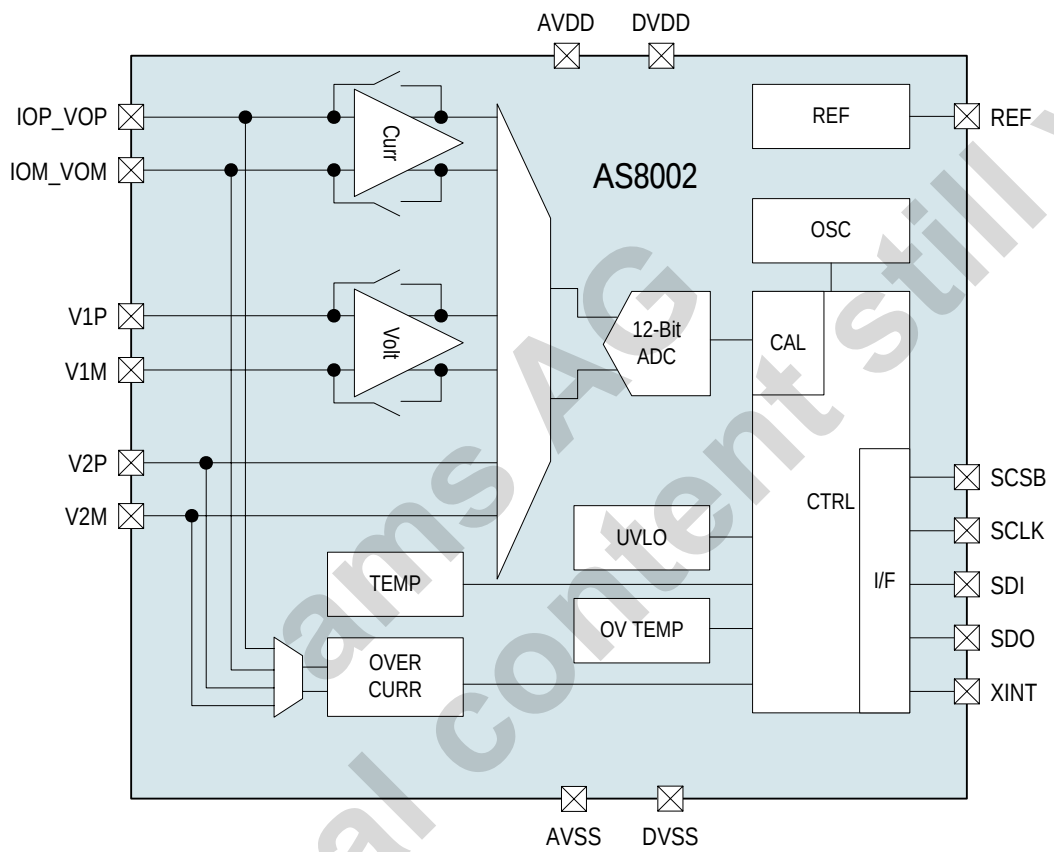

Technical content still valid
ams AG

Contents

1 General Description 1
2 Key Features 1
3 Applications 1
4 Pin Assignments 4
4.1 Pin Descriptions 4
5 Absolute Maximum Ratings 5
6 Electrical Characteristics 6
6.1 Operating Conditions 6
6.2 Block Electrical Characteristics 6
7 Detailed Description 9
7.1 Operating Modes 10
7.2 SPI Interface 10
7.3 SPI Interface Data Transfer Protocol 10
7.4 SPI Hardware Connection 11
7.5 SPI Timing 12
7.6 Measurement Example 13
7.7 Measurement Control and Calibration 14
7.8 Interrupts 14
7.9 Register Map Table 15
7.10 Register Description 16
8 Application Information 21
8.1 Application Hints 21
9 Package Drawings and Markings 22
10 Ordering Information 24

ams AG
Technical content still valid

4 Pin Assignments

Figure 2. Pin Assignments (Top View)

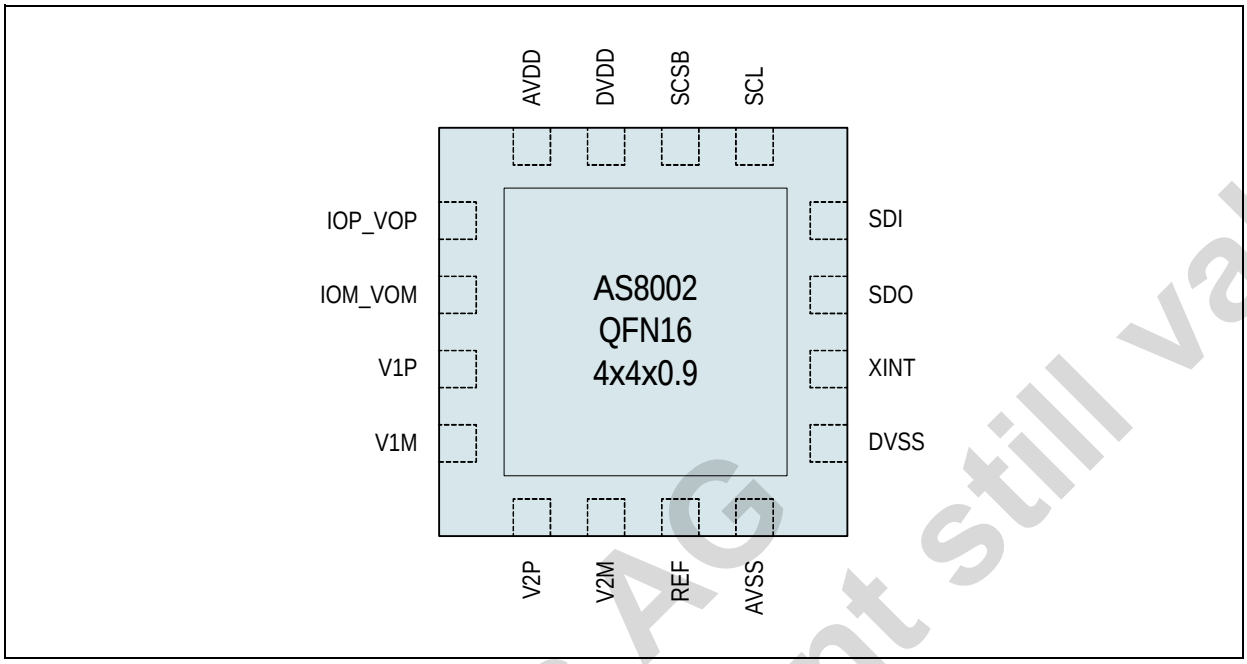

4.1 Pin Descriptions

Table 1. Pin Descriptions

Pin Name	Pin Number	Pin Type	Description
IOP_VOP	1	Analog pin	Analog Input Channel 0. Positive input of the differential analog input.
IOM_VOM	2	Analog pin	Analog Input Channel 0. Negative input of the differential analog input.
V1P	3	Analog pin	Analog Input Channel 1. Positive input of the differential analog input.
V1M	4	Analog pin	Analog Input Channel 1. Negative input of the differential analog input.
V2P	5	Analog pin	Analog Input Channel 2. Positive input of the differential analog input.
V2M	6	Analog pin	Analog Input Channel 2. Negative input of the differential analog input.
REF	7	Analog pin	Reference Positive Input Voltage.
AVSS	8	Supply pin	Ground reference for the analog circuitry.
DVSS	9	Supply pin	Ground reference for the digital circuitry.
XINT	10	Digital input/output pin	Interrupt pin, active low
SDO	11	Digital output pin	Serial peripheral interface (SPI): Serial Data Output
SDI	12	Digital input pin	Serial peripheral interface (SPI): Serial Data input
SCLK	13	Digital input pin	Serial peripheral interface (SPI): Serial Clock
SCSB	14	Digital input pin	Serial peripheral interface (SPI): Serial Chip Select (active low)
DVDD	15	Supply pin	Digital positive supply
AVDD	16	Supply pin	Analog positive supply
AVSS	PAD	Supply pin	Ground reference for the analog circuitry.

Note: Pin number assignment is likely to change.

Technical content still valid
ams AG

5 Absolute Maximum Ratings

Stresses beyond those listed in Table 2 may cause permanent damage to the device. These are stress ratings only, and functional operation of the device at these or any other conditions beyond those indicated in Block Electrical Characteristics on page 6 is not implied. Exposure to absolute maximum rating conditions for extended periods may affect device reliability.

Table 2. Absolute Maximum Ratings

Parameter	Min	Max	Units	Comments
DC supply voltage (V_{DD})	-0.3	+5.0	V	AVDD, DVDD
Input pin voltage (V_{IN})	-0.3	V_{DD}+0.3	V	
Electrostatic discharge (ESD)	-1000	1000	V	Norm: MIL 883 E method 3015
Storage temperature (T_{strg})	-55	125	ºC	
Lead temperature profile (T_{body})				The reflow peak soldering temperature (body temperature) specified is in accordance with *IPC/JEDEC J-STD-020 "Moisture/Reflow Sensitivity Classification for Non-Hermetic Solid State Surface Mount Devices".*
Humidity non-condensing	5	85	%	

ams AG
Technical content still valid

6 Electrical Characteristics

6.1 Operating Conditions

Table 3. Operating Conditions

Symbol	Parameter	Conditions	Min	Typ	Max	Units
AVDD	Positive analog supply voltage		3.0	3.3	3.6	V
AVSS	Negative analog supply voltage		0		0	V
A - D	Difference of supplies	AVDD – DVDD AVSS – DVSS	-0.1		0.1	V
DVDD	Positive digital supply voltage		3.0	3.3	3.6	V
DVSS	Negative digital supply voltage		0		0	V
T_{AMB}	Ambient temperature		-40	25	125	ºC
I_{SUPP}	Supply current				5	mA

6.2 Block Electrical Characteristics

AVDD=3.0V to 3.6V, T_{AMB}= -40 to +125ºC. Typical values at T_{AMB}= +25ºC and AVDD=3.3V (unless otherwise specified).

Table 4. Block Electrical Characteristics

Symbol	Parameter	Conditions	Min	Typ	Max	Units
ADC DC Accuracy						
RES	Resolution				12	Bits
INL	Integral Nonlinearity		-0.99		+0.99	LSB
DNL	Differential Nonlinearity	Guaranteed No Missed Codes to 12 Bits	-0.99		+0.99	LSB
OFS	Offset Error			±0.6	±4	LSB
OFSM	Offset Error Match			±0.1		LSB
GAIN	Gain Error				±4	LSB
GAINM	Gain Error Match			±0.1		LSB
ADC Dynamic Specifications f_{IN}=10 kHz Sine Wave Input						
SINAD	Signal to Noise = Distortion Ratio	f_{IN} = 10kHz		71		dB
SNR	Signal-to-Noise Ratio			72		dB
THD	Total Harmonic Distortion			-78		dB
SFDR	Spurious-Free Dynamic Range			84		dB
CCISOL	Channel-to-Channel Isolation	f_{IN} = 40kHz		-79		dB
FPBW	Full Power Bandwidth	at 3dB		35		MHz
FLBW		at 0.1dB		3.6		
ADC Analog Inputs of the Analog-to-Digital Converter						
VX+ – VX-	Differential Input Voltage Ranges		$-V_{REF}$		V_{REF}	V
VCMIN	Input Common Mode Voltage		$V_{REF}/2$		V_{DD}-$V_{REF}/2$	V
AILEAK	DC Leakage Current		-1		+1	µA
AIIZT	Input Capacitance	Track mode		TBD		pF
AIIZH		Hold mode		TBD		pF
ADC Conversion Rate						
t_{CONV}	Conversion Time	Running from the internal oscillator			10	µs

Technical content still valid
ams AG

Table 4. Block Electrical Characteristics

Symbol	Parameter	Conditions	Min	Typ	Max	Units
$t_{ACQUISITION}$	Track-and-Hold Acquisition Time				TBD	µs
TPUT	Throughput Rate		100			KSPS
APERTURE	Aperture Delay			4		ns
JITTER	Aperture Jitter			50		ps
Reference Output						
RFRNG	Range	Typical accuracy ±TBD%		2.5		V
RFTC	Internal Reference Drift			10		ppm/ºC
Programmable Gain Amplifiers						
AMPGAIN0	Gain channel 0	Programmable	2		64	V/V
| VV0_I0 |	Input level 0	Differential, with gain of 64		14	20	mV_P
AMPGAIN1	Gain channel 1	Programmable	2	c	8	V/V
| VV1 |	Input level 1	Differential, with gain of 6		150	212	mV_P
AMPOFFED	Offset error drift		-20		20	µV
AMPGAINED	Gain error drift		-0.1		0.1	%
AMPTHD	Total harmonic distortion			TBD		
Temperature Sensor						
TEMPAERR	Absolute Error (trimmed)		-5		+5	ºC
TEMPRERR	Relative Error (trimmed)		-3		+3	ºC
TEMPRNG	Temperature Range		-40		85	ºC
TEMPRES	Resolution			0.75		ºC/LSB
Internal Oscillator						
OSCFREQ	Frequency			10		MHz
OSCERROR	Relative Error		-10		+10	%
Over Current						
OVCURRDELAY	Reaction Time	From chip input to output			2	µs
OVCURRERROR	Relative Error	For threshold lower than 50mV	-20		+20	%
		For threshold higher than 50mV	-10		+10	
Under Voltage Lock Out						
UVLOHI	High Threshold			2.85		V
UVLOHYST	Hysteresis			0.1		V
Digital Inputs						
V_{IH}	Input High Voltage		0.7xDVDD			V
V_{IL}	Input Low Voltage				0.3xDVDD	V
I_{IN}	Input Current	V_{IN}=0V or DVDD	-1		+1	µA
C_{IN}	Input Capacitance			15		pF
Digital Outputs						
V_{OH}	Output High Voltage	I_{SOURCE} = 200 µA; DVDD = 3 to 3.6V	DVDD - 0.2			V
V_{OL}	Output Low Voltage	I_{SINK} = 200 µA			0.4	V

Technical content still valid
ams AG

Table 4. Block Electrical Characteristics

Symbol	Parameter	Conditions	Min	Typ	Max	Units
Coding	Output Coding		Two's complement			
Power Requirements						
V_{DD}	Positive Supply Voltage		3		3.6	V
I_{DD}		AVDD= 3V, f_{SAMPLE} = 100ksps Input amplifier OFF		650		µA
		AVDD = 3V, f_{SAMPLE} = 100ksps Input amplifier ON			5	mA
		Full shutdown mode (Off mode)			1	µA

ams AG
Technical content still valid

7 Detailed Description

Figure 3 presents a typical application schematic for the AS8002 used for voltage and current measurement of a device connected to the grid such a solar inverter or microinverter.

The external circuitry comprises the power supply unit that is connected to the grid signal and that generates a stable DC voltage which is the supply of the AS8002 and the digital isolation. Both current and voltage are scaled down and filtered prior to be sensed by the AS8002. In the case of the voltage, a resistor divider is enough to scale down the voltage. In the case of the current, a low ohmic shunt resistor should be used. The value of this shunt resistor should be calculated in order not to saturate the inputs of the AS8002 but to provide a good signal to noise ratio. It is also important to minimize the value of the shunt resistor to lower the losses and increase the overall efficiency.

Unlike commonly used sensing methods, the AS8002 is connected to the same potential level as the grid, which allows using a low cost shunt resistor as the sensing device. The isolation is achieved by means of a digital isolator which should be able to handle a data rate of up to 2Mbps. This sensing solution has several advantages compared to other common solutions, like the stability over temperature, accuracy of the measurements and allowed bandwidth. All these lead to an accurate control of the DC-AC converter with low DC injection currents.

Figure 3. Typical Application Circuit

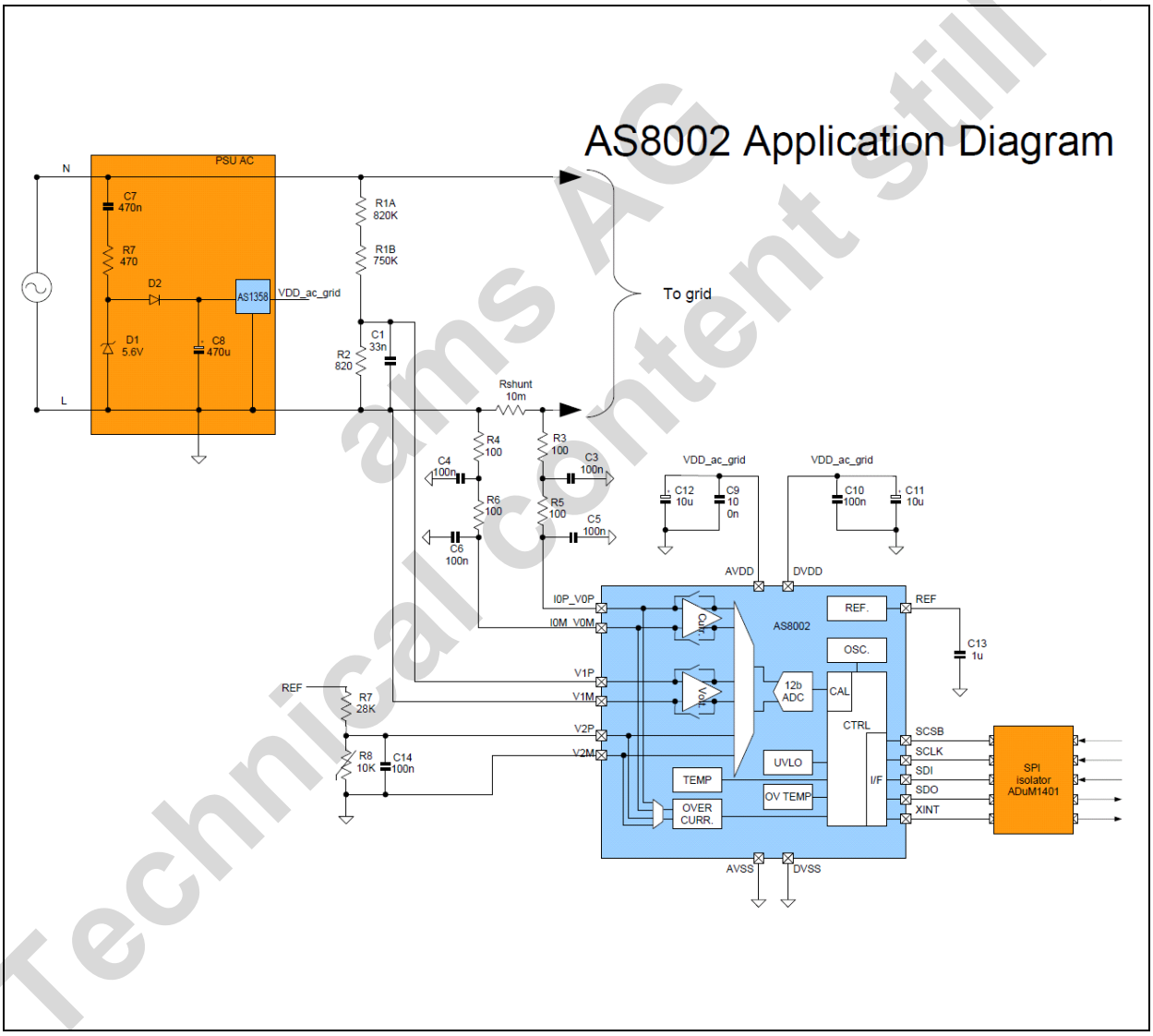

Technical content still valid
ams AG

7.1 Operating Modes

When the supply voltage is below the threshold V_{POR}, the AS8002 is in Reset mode. Once the supply voltage is higher than V_{POR}, the AS8002 goes into Off mode during its initialization time t_{INIT}. In this mode, the current consumption is reduced and only the Control register can be read or written. Once the register bit chip_en has been set to 1, the chip goes into On mode and can be normally used after t_{WAKEUP}. The chip can go immediately back to Off mode by setting chip_en to 0.

Table 5. Characteristics

Parameter	Description	Min	Max	Unit
V_{POR}	POR threshold voltage		2.6	V
t_{INIT}	Initialization time		3	ms
t_{WAKEUP}	Wake up time		300	µs

7.2 SPI Interface

The 16-bit SPI interface enables read / write access to the register blocks and is compatible to a standard micro controller interface, using SPI Mode 3 (SCLK initial state = high, data latched with rising edge of SCLK).

The SPI module is active as soon as pin SCSB is pulled low. The AS8002 is then ready to read the 8-bit SPI address on the SDI input with every rising edge of SCLK and writes on its SDO output with the falling edge of SCLK. After 16 clock cycles SCSB has to be set back to high status in order to reset the interface for the next read/write cycle.

The address is split into an upper 7 bit address (addr[0…6]) and a lower 8th bit (R/W) containing the read/write information.

Writing data to the AS8002 is established by setting the R/W bit to 0. The 8 bits following this bit on SDI contain the data to be written into the address specified in the first 8 bits.

Reading data is established by setting the R/W bit to 1. The 8 bits following this bit on SDO contain the data from the address specified in the first 8 bits on SDI.

7.3 SPI Interface Data Transfer Protocol

Figure 4. Write Mode

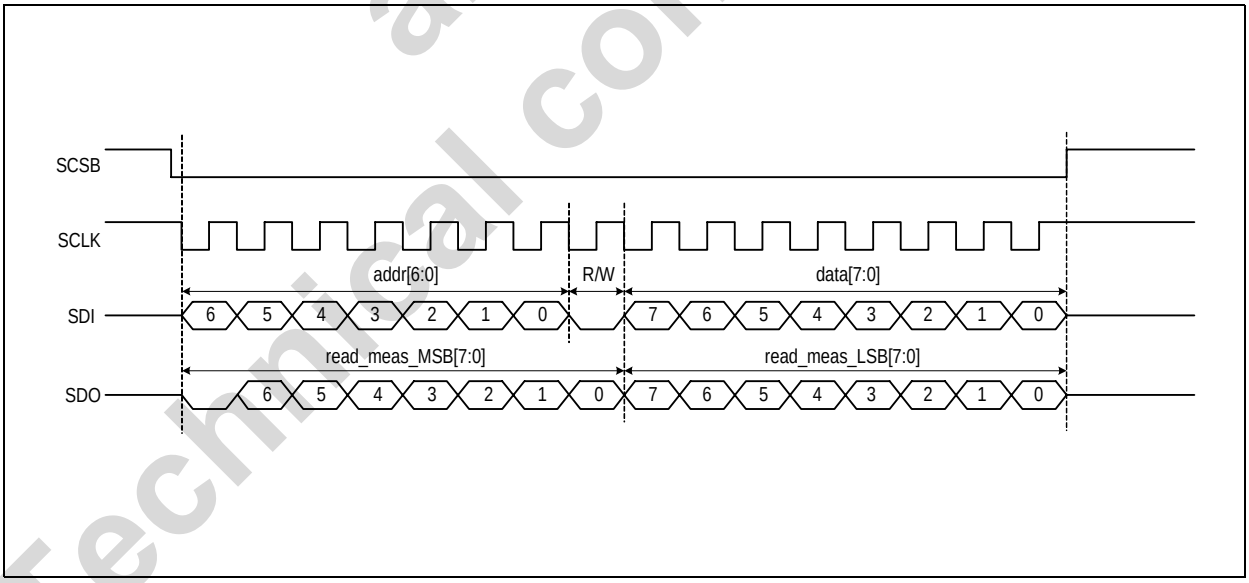

ams AG
Technical content still valid

Figure 5. Read Mode

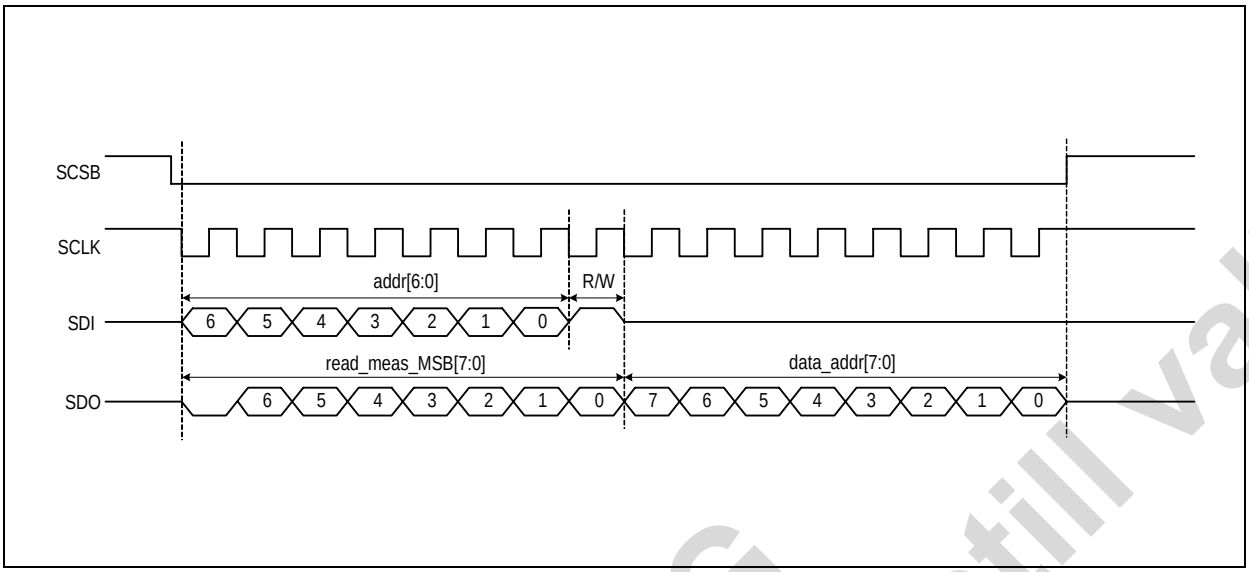

The interface of the AS8002 corresponds to a 4-wire SPI where each data transfer is composed of 16 bits. Each 16-bit transfer of the SDI is divided into a 7-bit address word indicating the target register, one R/W bit indicating the operation to be done and a 8-bit word data indicating the data to be written.

The data transferred in SDO is also composed of 16 bits. These can be divided into the 8 MSBs which correspond to the 8 MSBs of the last conversion run by the ADC plus 8 LSBs which clock out the data that has been requested by the SDI in that same cycle. This allows for a given read register to be addressed and read in the same 16-bit transfer.

7.4 SPI Hardware Connection

Figure 6 shows a basic interconnection diagram of an AS8002 device with a host controller. Data transmission is enabled with signal SCSB (SS/), the serial clock is applied at pin SCLK (SCK). Data is shifted into the AS8002 via signal SDI (MOSI) and read from the AS8002 via signal SDO (MISO).

Figure 6. AS8002 and the Controller

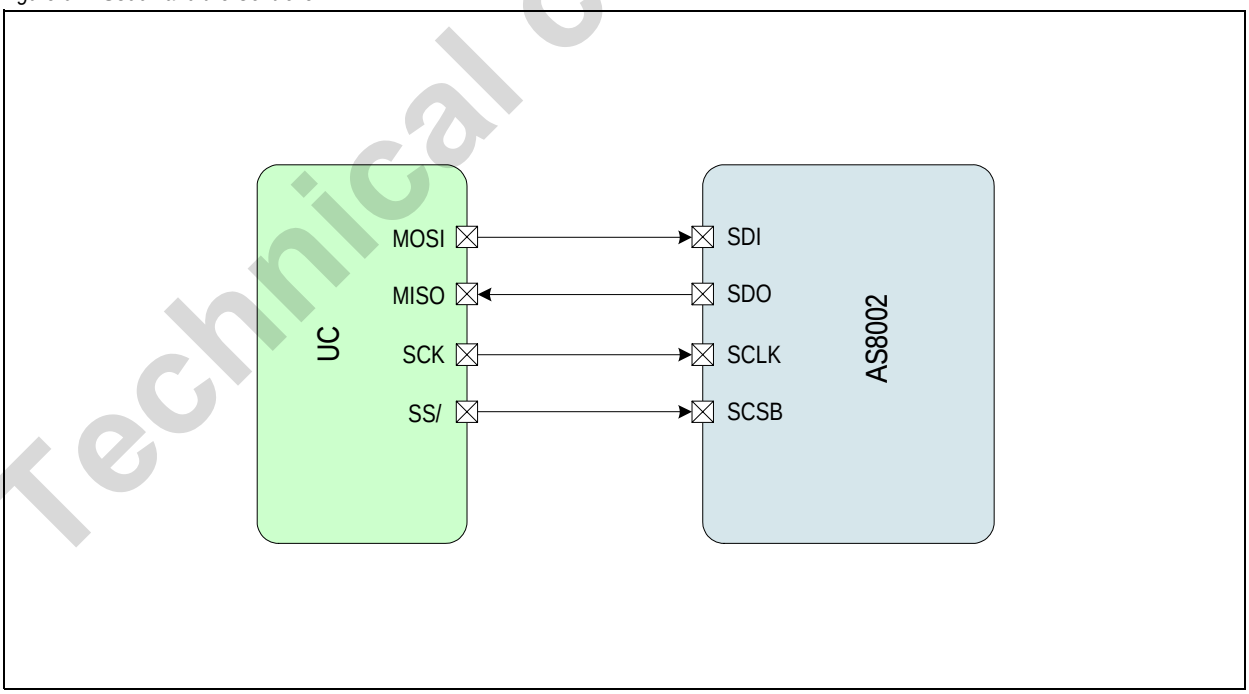

Technical content still valid
ams AG

7.5 SPI Timing

Figure 7. Timing Diagram

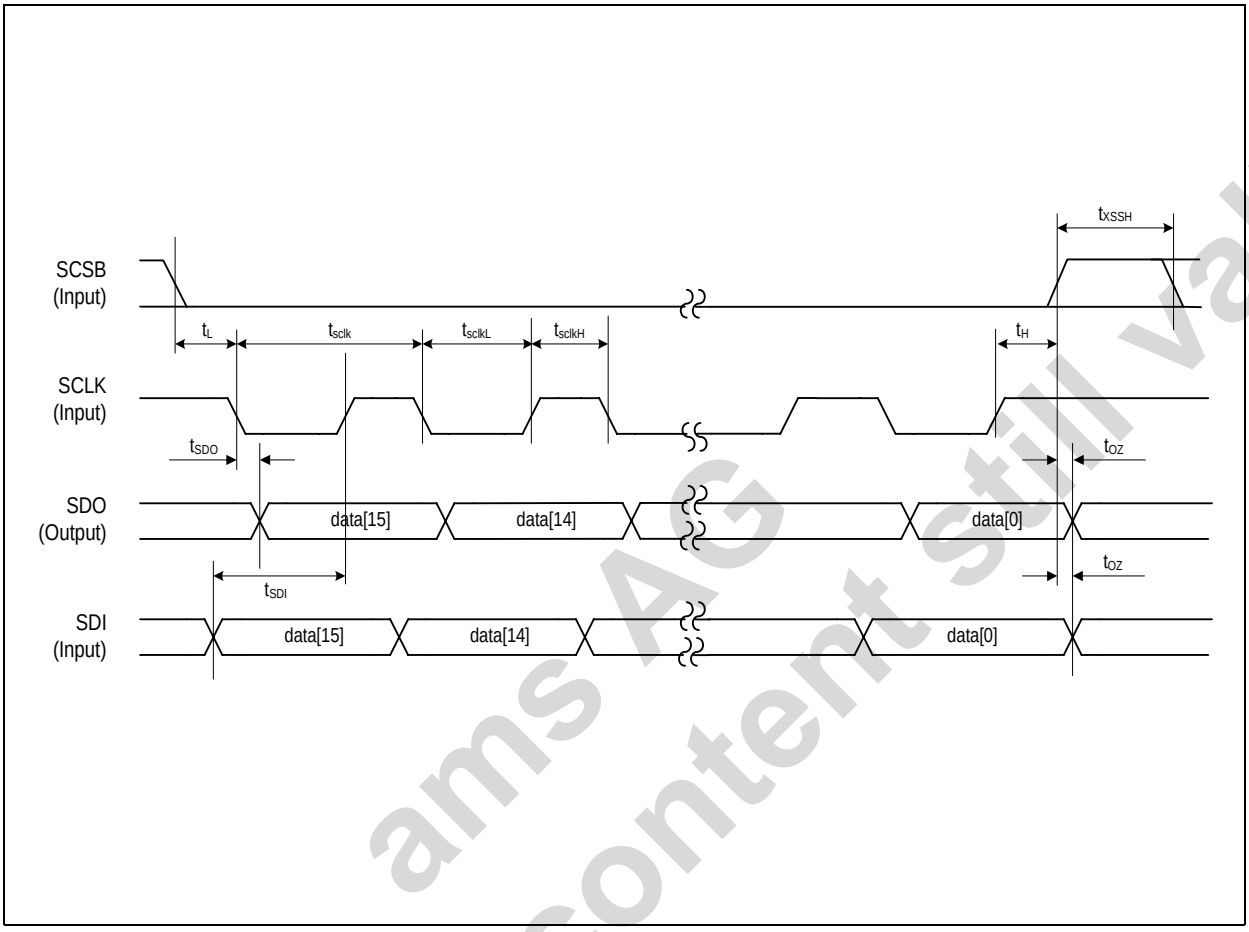

Table 6. Timing Characteristics

Parameter	Description	Min	Max	Unit
t_L	Time between SCSB falling edge and SCK rising edge	350		ns
t_{SCLK}	Serial clock period	100		ns
t_{SCLKL}	Low period of serial clock	50		ns
t_{SCLKH}	High period of serial clock	50		ns
t_H	Time between last falling edge of SCK and rising edge of SCSB	t_{SCK} / 2		ns
t_{XSSH}	High time of SCSB between two transmissions	350		ns
t_{SDI}	Data input valid to rising clock edge	20		ns
t_{SDO}	SCLK falling edge to data output valid		20	ns

Note: The data on SDO initially reflects the data corresponding to the previous command on SDI. Hence, in write mode, the full 16-bit data of a measurement can be read.

Technical content still valid
ams AG

7.6 Measurement Example

The following example shows a simple way to alternately read the voltage and current values:

Bits [b2:b0] in Addr 03h control the ADC input multiplexer:

Name	Addr	Default	Content							
			b7	b6	b5	b4	b3	b2	b1	b0
Input Multiplexer	03h	00h				adc_en		mux_sel[2:0] 0: Current channel PGA output 1: Voltage channel PGA output		

1. Select the Current channel input (IOM, IOP) : 0610h
   - Set the Address [A6:A0] to 03h,
   - Set the R/W bit to 0 (write mode) and the data to 10h (adc_en = 1, mux_sel = 0)
   - In parallel to writing the 16-bit data on SDI, a set of 16-bit data can be read on SDO, which contains the data from the second to last command.
2. Select the Voltage channel input (V1M, V1P) : 0611h
   - Set the Address [A6:A0] to 03h,
   - Set the R/W bit to 0 (write mode) and the data to 11h (adc_en = 1, mux_sel = 1)
   - In parallel to writing the 16-bit data on SDI, a set of 16-bit data can be read on SDO, which contains the data from the second to last command.
3. Change the input multiplexer back to Current channel input (IOM, IOP) : 0610h
   - Repeat the sequence 1 above: addr = 03h, data = 10h,
   - The 16-bit current input data from the second to last invoked command (1 above) can be read on SDO.
4. Loop sequences 2 and 3

Note: In sequence 2, the 16-bit voltage input data from the second to last command can be read on SDO.

Figure 8. Measurement Diagram

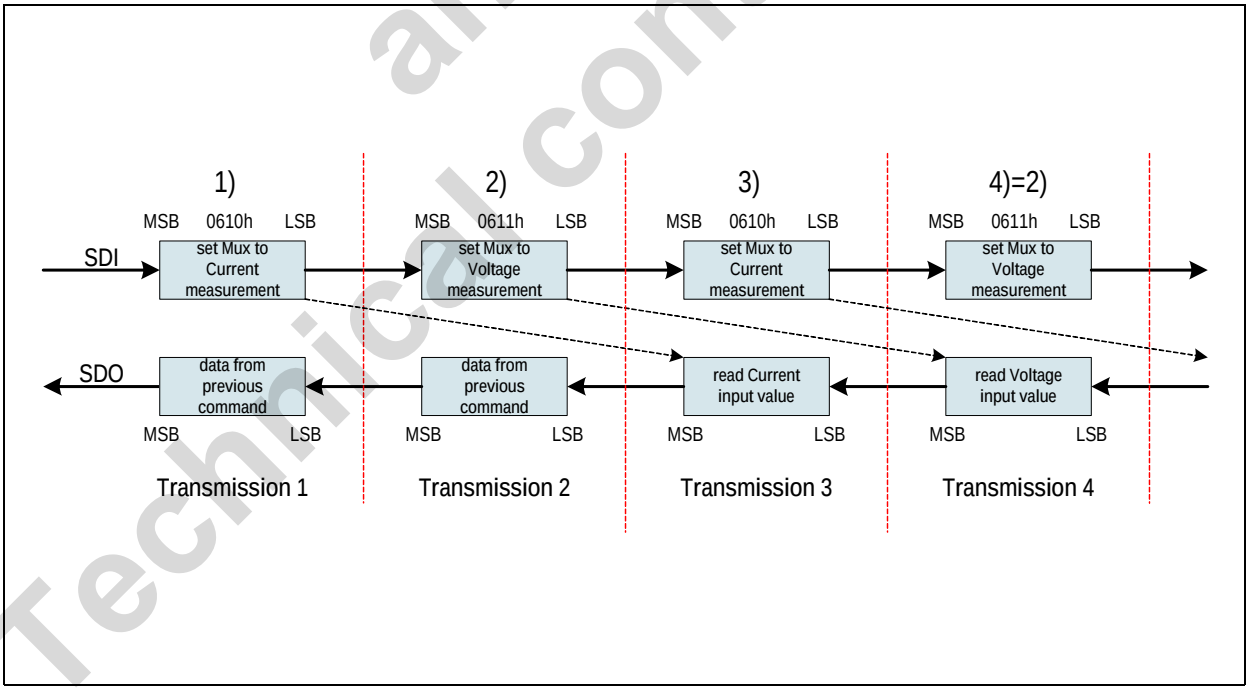

Note: The 16-bit input data from the voltage and current measurements contain the ADC data in the lower 12 bits and two status bits in the upper 4 bits (see Register Map Table on page 15).

ams AG
Technical content still valid

Table 7. Current and Voltage Measurements

Name	Content				
	b15	b14	b13	b12	b11:b0
Current Measurement	0	warning_detected	interrupt_detected	X	curr_meas
Voltage Measurement	0	warning_detected	interrupt_detected	X	volt_meas

7.7 Measurement Control and Calibration

The conversion starts on SCSB falling edge when adc_en is a 1. The value of the result of the conversion can be read at the next SPI write command 10µs later.

Figure 9. ADC Burst Mode

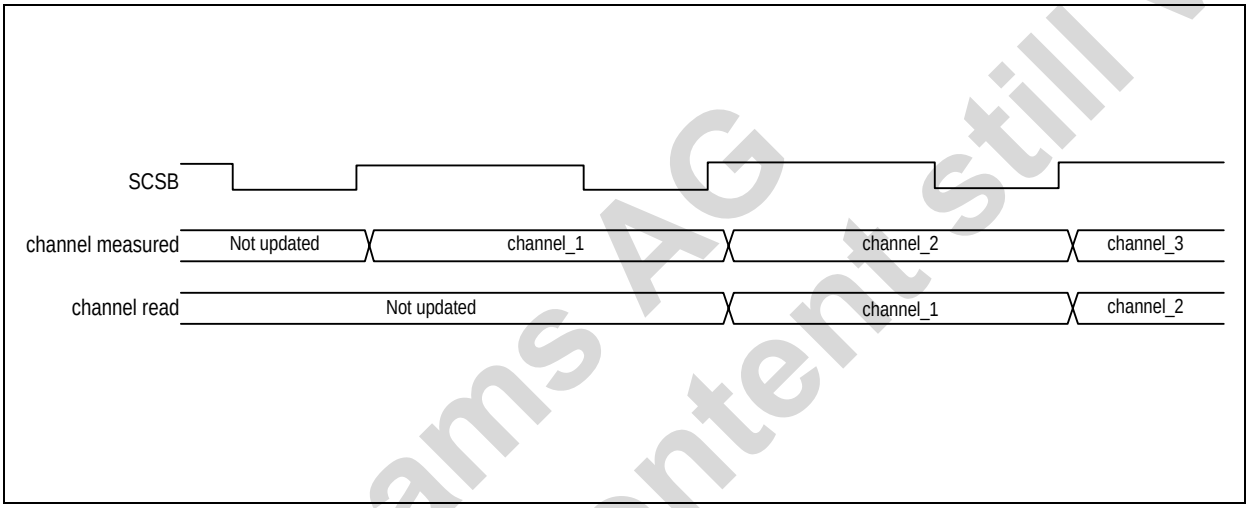

Read_meas will be transferred to the Current, Voltage or Auxiliary measurement upon mux_sel[2:0] value – curr_meas, volt_meas or aux_meas.

Calibration is done according to the formulas:

For current channel:

$$read_meas = adc_meas * (1024 + pga_curr_gain_cal) / 1024 \quad (EQ\ 1)$$

For voltage channel:

$$read_meas = adc_meas * (1024 + pga_volt_gain_cal) / 1024 \quad (EQ\ 2)$$

For auxiliary channel:

$$read_meas = adc_meas * (1024 + aux_gain_cal) / 1024 \quad (EQ\ 3)$$

Note: The Raw ADC results are also available in the registers and are called adc_meas[11:0]

7.8 Interrupts

When an over current, an under voltage or an over temperature occurs the bit warning_detected is set to 1.

The interrupt state is present on interrupt_detected and on the pin XINT.

The statuses are available in the register Interrupt Status. It contains the bits over_currrent_int_en, under_voltage_int_en, over_temp_int_en.

The generation of the interrupt can be enabled or disabled in the register “Interrupt Enable”. It contains the bits over_currrent_int_i, under_voltage_int_i, over_temp_int_i.

Values of the register Interrupt Status are kept until this register is read.

Technical content still valid
ams AG

7.9 Register Map Table

Table 8. Register Map

Name	Addr	Default	Content							
			b7	b6	b5	b4	b3	b2	b1	b0
Control	01h	00h		over_current_channel	over_current_en	adc_ref_en	pga_volt_en	pga_curr_en	temp_sensor_en	chip_en
PGA Gain	02h	00h	pga_volt_gain[1:0]			pga_curr_gain[4:0]				
Input Multiplexer	03h	00h				adc_en		mux_sel[2:0]		
Over Temperature Threshold	04h	FFh	over_temp_thres[7:0]							
Interrupt Enable	05h	00h						over_current_int_en	under_voltage_int_en	over_temp_int_en
Over Current Range	06h	FFh	over_current_range[7:0]							
Current Measurement MSB	10h	00h	0	warning_detected	interrupt_detected	X	curr_meas[11:8]			
Current Measurement LSB	11h	00h	curr_meas[7:0]							
Voltage Measurement MSB	12h	00h	0	warning_detected	interrupt_detected	X	volt_meas[11:8]			
Voltage Measurement LSB	13h	00h	volt_meas[7:0]							
Auxiliary Measurement MSB	14h	00h	0	warning_detected	interrupt_detected	X	aux_meas[11:8]			
Auxiliary Measurement MSB	15h	00h	aux_meas[7:0]							
Temperature Measurement	16h	00h	temp[7:0]							
Interrupt Status	17h	00h						over_current_i	under_voltage_i	over_temp_i
ASIC ID 1	18h	02h	0	0	0	0	0	0	1	0
ASIC ID 2	19h	5Xh	0	1	0	1	X	X	X	X
Raw ADC Results MSB	1Ah	00h	0	warning_detected	interrupt_detected	X	adc_meas[11:8]			
Raw ADC Results LSB	1Bh	00h	adc_meas[7:0]							
PGA Current Gain Calibration	3Ah	00h	pga_curr_gain_cal[7:0]							
PGA Voltage Gain Calibration	3Bh	00h	pga_volt_gain_cal[7:0]							
Auxiliary Channel Gain Calibration	3Ch	00h	aux_gain_cal[7:0]							

Note: Highlighted registers are Read only registers (bits).

Technical content still valid
ams AG

7.10 Register Description

Table 9. 01h

Address: 01h		Control Register		
		Controls the power on and off of the internal blocks		
Bit	Bit Name	Default	Access	Description
0	chip_en	0h	R/W	0: Chip in complete power off 1: Chip on
1	temp_sensor_en	0h	R/W	0: Temperature sensor disabled 1: Temperature sensor enabled
2	pga_curr_en	0h	R/W	0: Current channel PGA disabled 1: Current channel PGA enabled
3	pga_volt_en	0h	R/W	0: Voltage channel PGA disabled 1: Voltage channel PGA enabled
4	adcref_en	0h	R/W	0: Internal ADC reference voltage off 1: Internal ADC reference voltage on **Note:** This bit must be set to allow ADC measurements.
5	over_current_en	0h	R/W	0: Over current detector disabled 1: Over current detector enabled
6	over_current_channel	0h	R/W	0: Over current detector connected to inputs IOP_VOP and IOM_VOM 1: Over current detector connected to inputs V2P and V2M

Table 10. 02h

Address: 02h		PGA Gain Register		
		Controls the gain of the current and voltage channel PGAs		
Bit	Bit Name	Default	Access	Description
4:0	pga_curr_gain	00h	R/W	Gain for current channel is given by the formula: *2*pga_curr_gain+2* *(EQ 4)*
7:6	pga_volt_gain	0h	R/W	Gain for voltage channel is given by the formula: *2*pga_volt_gain+2* *(EQ 5)*

Table 11. 03h

Address: 03h		Input Multiplexer Register		
		Controls the ADC and select the channel to be converted		
Bit	Bit Name	Default	Access	Description
2:0	mux_sel	00h	R/W	Select the input to be converted: 0: Current channel PGA output 1: Voltage channel PGA output 2: V2P and V2M 3: AVDD and AVSS 4: IOP_VOP and IOM_VOM 5: V1P and V1M 6: Reserved 7: Reserved
4	adc_en	0h	R/W	Enable the ADC conversion that will start on the next SCSB falling edge

Technical content still valid
ams AG

Table 12. 04h

Address: 04h		Over Temperature Threshold Register		
		Set the over temperature threshold value		
Bit	Bit Name	Default	Access	Description
7:0	over_temp_thres	FFh	R/W	Over temperature detection is triggered when temp value is higher than over_temp_thres

Table 13. 05h

Address: 05h		Interrupt Enable Register		
		Separately enables the interrupts		
Bit	Bit Name	Default	Access	Description
0	over_temp_int_en	0h	R/W	0: Interrupt due to over temperature is disabled 1: Interrupt due to over temperature is enabled
1	under_voltage_int_en	0h	R/W	0: Interrupt due to under voltage is disabled 1: Interrupt due to under voltage is enabled
2	over_current_int_en	0h	R/W	0: Interrupt due to over current is disabled 1: Interrupt due to over current is enabled

Table 14. 06h

Address: 06h		Over Current Range Register		
		Set the over current comparators absolute threshold voltage		
Bit	Bit Name	Default	Access	Description
7:0	over_current_range	FFh	R/W	The threshold voltage is given by the formula: *over_current_range*1m* *(EQ 6)* **Where:** over_current_range should be higher than 10h

Table 15. 10h

Address: 10h		Current Measurement MSB Register		
		Gives measured value of current (MSB) and status of warnings and interrupts		
Bit	Bit Name	Default	Access	Description
3:0	curr_meas[11:8]	0h	R	MSB of current channel measurement, value is given as 2's complement number by the formula: *I=curr_meas*1.22m / (Rshunt*curr_gain)* *(EQ 7)*
5	interrupt detected	0h	R	Same value as XINT (complemented) 0: No interrupt detected 1: Interrupt is detected
6	warning detected	0h	R	Over temperature, under voltage or over current detected 0: No warning detected 1: Warning detected

Technical content still valid

Table 16. 11h

Address: 11h		Current Measurement LSB Register		
		Gives measured value of current (LSB)		
Bit	Bit Name	Default	Access	Description
7:0	curr_meas[7:0]	0h	R	LSB of current channel measurement, value is given as 2's complement number by the formula: *I=curr_meas*1.22m / (Rshunt*curr_gain)* *(EQ 8)*

Table 17. 12h

Address: 12h		Voltage Measurement MSB Register		
		Gives measured value of voltage (MSB) and status of warnings and interrupts		
Bit	Bit Name	Default	Access	Description
3:0	volt_meas[11:8]	0h	R	MSB of voltage channel measurement, value is given as 2's complement number by the formula: *volt_meas*1.22m / volt_gain* *(EQ 9)*
5	interrupt detected	0h	R	Same value as XINT (complemented) 0: No interrupt detected 1: Interrupt is detected
6	warning detected	0h	R	Over temperature, under voltage or over voltage detected 0: No warning detected 1: Warning detected

Table 18. 13h

Address: 13h		Voltage Measurement LSB Register		
		Gives measured value of voltage (LSB)		
Bit	Bit Name	Default	Access	Description
7:0	volt_meas[7:0]	0h	R	LSB of voltage channel measurement, value is given as 2's complement number by the formula: *volt_meas*1.22m / volt_gain* *(EQ 10)*

Table 19. 14h

Address: 14h		Auxiliary Measurement MSB Register		
		Gives measured value of auxiliary channel (MSB) and status of warnings and interrupts		
Bit	Bit Name	Default	Access	Description
3:0	aux_meas[11:8]	0h	R	MSB of auxiliary channel measurement, value is given as 2's complement number by the formula: *aux_meas*1.22m* *(EQ 11)*
5	interrupt detected	0h	R	Same value as XINT (complemented) 0: No interrupt detected 1: Interrupt is detected
6	warning detected	0h	R	Over temperature, under auxiliary or over auxiliary detected 0: No warning detected 1: Warning detected

ams AG
Technical content still valid

Table 20. 15h

Address: 15h		Auxiliary Measurement LSB Register		
		Gives measured value of auxiliary channel (LSB)		
Bit	Bit Name	Default	Access	Description
7:0	aux_meas[7:0]	0h	R	LSB of auxiliary channel measurement, value is given as 2's complement number by the formula: aux_meas*1.22m *(EQ 12)*

Table 21. 16h

Address: 16h		Temperature Measurement Register		
		Gives measured value of temperature		
Bit	Bit Name	Default	Access	Description
7:0	temp	0h	R	Temperature value (in °C) is given by the formula: 92+temp*3/4 *(EQ 13)*

Table 22. 17h

Address: 17h		Interrupt Status Register		
		Gives status of each interrupt source		
Bit	Bit Name	Default	Access	Description
0	over_temp_i	0h	R	0: over temperature not detected 1: over temperature detected
1	under_voltage_i	0h	R	0: under voltage not detected 1: under voltage detected
2	over_current_i	0h	R	0: over current not detected 1: over current detected

Table 23. 18h

Address: 18h		ASIC ID 1 Register		
		Provides Chip identification		
Bit	Bit Name	Default	Access	Description
7:0	asic_id	02h	R	Chip indentification

Table 24. 19h

Address: 19h		ASIC ID 2 Register		
		Provides chip version number		
Bit	Bit Name	Default	Access	Description
7:0	asic_version	5Xh	R	50h: Chip version 0 51h: Chip version 1

Technical content still valid
ams AG

Table 25. 1Ah

Address: 1Ah		Raw ADC Results MSB Register		
		Gives measured value of the ADC (MSB) and status of warnings and interrupts		
Bit	Bit Name	Default	Access	Description
3:0	adc_meas[11:8]	0h	R	MSB of raw ADC measurement, value is given as 2's complement number by the formula: adc_meas*1.22m *(EQ 14)*
5	interrupt detected	0h	R	Same value as XINT (complemented) 0: No interrupt detected 1: Interrupt is detected
6	warning detected	0h	R	Over temperature, under voltage or over current detected 0: No warning detected 1: Warning detected

Table 26. 1Bh

Address: 1Bh		Raw ADC Results LSB Register		
		Gives measured value of raw ADC (LSB)		
Bit	Bit Name	Default	Access	Description
7:0	adc_meas[7:0]	0h	R	LSB of raw ADC measurement, value is given as 2's complement number by the formula: adc_meas*1.22m *(EQ 15)*

Table 27. 3Ah

Address: 3Ah		PGA Current Gain Calibration Register		
		Set value of correction coefficient for current measurement		
Bit	Bit Name	Default	Access	Description
7:0	pga_curr_gain_cal	00h	R/W	Correct the measured current value multiplying it by the following factor, where pga_curr_gain_cal is a number defined as 2's complement: (1024 + pga_curr_gain_cal) / 1024 (EQ 16)

Table 28. 3Bh

Address: 3Bh		PGA Voltage Gain Calibration Register		
		Set value of correction coefficient for voltage measurement		
Bit	Bit Name	Default	Access	Description
7:0	pga_volt_gain_cal	00h	R/W	Correct the measured voltage value multiplying it by the following factor, where pga_volt_gain_cal is a number defined as 2's complement: (1024 + pga_volt_gain_cal) / 1024 (EQ 17)

Table 29. 3Ch

Address: 3Ch		Auxiliary Channel Gain Calibration Register		
		Set value of correction coefficient for auxiliary measurement		
Bit	Bit Name	Default	Access	Description
7:0	aux_gain_cal	00h	R/W	Correct the measured value of the auxiliary channel multiplying it by the following factor, where aux_gain_cal is a number defined as 2's complement: (1024 + aux_gain_cal) / 1024 (EQ 18)

Technical content still valid
ams AG

8 Application Information

Table 30 provides examples of Gain selection of Channel 1 for different shunt resistors and maximum RMS currents.

Table 30. Gain Selection

Shunt Resistor Value	Sensing RMS Current (A)	Recommended Linear Gain for Channel 1 for ADC to work in 80% of dynamic range
7.5 mΩ	1.5	Gain1 = 64
10 mΩ	1.5	Gain1 = 48
5 mΩ	3	Gain1 = 48
7.5 mΩ	3	Gain1 = 32
10 mΩ	3	Gain1 = 24
5 mΩ	6	Gain1 = 24
7.5 mΩ	6	Gain1 = 16
10 mΩ	6	Gain1 = 12

8.1 Application Hints

Grounding and Layout. The analog and digital supplies of the AS8002 (AVDD, DVDD, AVSS, DVSS) are independent and separately pinned out to minimize coupling between the analog and digital sections of the device. The printed circuit board (PCB) that houses the AS8002 should be designed such that the analog and digital sections are separated and confined to certain areas on the board. This design facilitates the use of ground planes that can be easily separated.

To provide optimum shielding for ground planes, a minimum etch technique is generally best. All VSS pins of the AS8002 should be sunk in the ground plane. Digital and analog ground planes should be joined in only one spot. If the AS8002 is in a system where multiple devices require an AVSS and DVSS connection, this connection should still be made at one point only; a star ground point that should be established as close as possible to the ground pins on the AS8002.

Avoid running digital lines under the device as this couples noise into the chip. However, the analog ground plane should be allowed to run under the AS8002 to avoid noise coupling. The power supply lines to the AS8002 should use as large trace width as possible to provide low impedance paths and reduce the effects of glitches on the power supply line.

Likewise, the positive supply pins AVDD and DVDD should be connected only at one common star point close the output of the power supply. For best performance of the analog blocks of the AS8002, it is important to have a clean, noise-free supply voltage at AVDD.

To avoid radiating noise to other sections of the board, fast switching signals, such as clocks, should be shielded with digital ground, and clock signals should never run near the analog inputs. Avoid crossover of digital and analog signals. To reduce the effects of feedthrough within the board, traces on opposite sides of the board should run at right angles to each other. A microstrip technique is the best method but is not always possible with a double sided board. In this technique, the component side of the board is dedicated to ground planes, while signals are placed on the opposite side.

Good decoupling is also important. All analog supplies should be decoupled with 10µF ceramic capacitors in parallel with 0.1µF capacitors to GND. Refer to Typical Application Circuit (page 9). To achieve the best results from these decoupling components, they must be placed as close as possible to the device The 0.1µF capacitors should have low effective series resistance (ESR) and low effective series inductance (ESI), such as common ceramic types or surface-mount types. These low ESR and ESI capacitors provide a low impedance path to ground at high frequencies to handle transient currents due to internal logic switching.

Technical content still valid
ams AG

9 Package Drawings and Markings

The device is available in a 16-pin QFN (4x4x0.9mm) package.

Figure 10. 16-pin QFN (4x4x0.9mm) Package

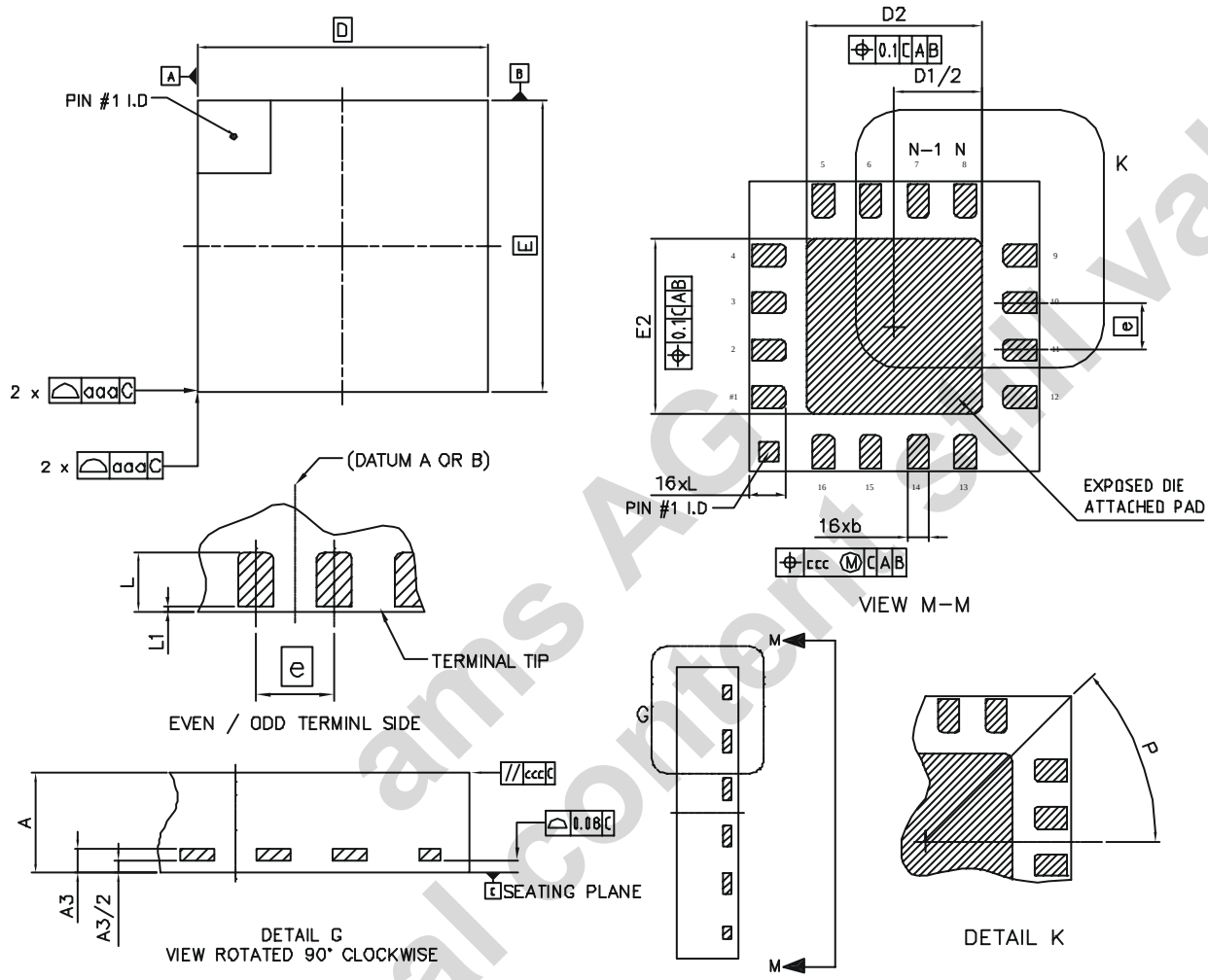

Symbol	Min	Typ	Max
A	0.75	0.85	0.95
A1		0.203 REF	
b	0.25	0.30	0.35
D		4.00 BSC	
E		4.00 BSC	
D2	2.30	2.40	2.50
E2	2.30	2.40	2.50

Symbol	Min	Typ	Max
e		0.65 BSC	
L	0.40	0.50	0.60
L1			0.10
P		45º BSC	
aaa		0.15	
ccc		0.10	

Notes:

1. Dimensioning and tolerancing conform to *ASME Y14.5M-1994*.
2. All dimensions are in millimeters, angles are in degrees.
3. Dimension b applies to metallized terminal and is measured between 0.25 and 0.30mm from terminal tip. Dimension L1 represents terminal full back from package edge up to 0.1mm is acceptable.
4. Coplanarity applies to the exposed heat slug as well as the terminal.
5. Radius on terminal is optional.

Technical content still valid
ams AG

Revision History

Revision	Date	Owner	Description
1.0	14 May, 2010	jja	Initial revision
1.1	25 Aug, 2010	spo	Updated the following in Register Map (page 15): 1) Register bit b4 at address 01 (previously under_voltage_en) is now adc_ref_en 2) ASIC ID 2 register value is now 5Xh

Note: Typos may not be explicitly mentioned under revision history.

ams AG
Technical content still valid

10 Ordering Information

The devices are available as the standard products shown in Table 31.

Table 31. Ordering Information

Ordering Code	Description	Delivery Form	Package
AS8002 AQFP	Temperature: -40ºC to 125ºC	Tape & Reel in Dry Pack; 6000 pieces / reel	16-pin QFN (4x4x0.9mm)

Note: All products are RoHS compliant and Pb-free.
Buy our products or get free samples online at ICdirect: http://www.austriamicrosystems.com/ICdirect

For further information and requests, please contact us mailto:sales@austriamicrosystems.com
or find your local distributor at http://www.austriamicrosystems.com/distributor

Copyrights

Copyright © 1997-2010, austriamicrosystems AG, Tobelbaderstrasse 30, 8141 Unterpremstaetten, Austria-Europe. Trademarks Registered ®. All rights reserved. The material herein may not be reproduced, adapted, merged, translated, stored, or used without the prior written consent of the copyright owner.

All products and companies mentioned are trademarks or registered trademarks of their respective companies.

Disclaimer

Devices sold by austriamicrosystems AG are covered by the warranty and patent indemnification provisions appearing in its Term of Sale. austriamicrosystems AG makes no warranty, express, statutory, implied, or by description regarding the information set forth herein or regarding the freedom of the described devices from patent infringement. austriamicrosystems AG reserves the right to change specifications and prices at any time and without notice. Therefore, prior to designing this product into a system, it is necessary to check with austriamicrosystems AG for current information. This product is intended for use in normal commercial applications. Applications requiring extended temperature range, unusual environmental requirements, or high reliability applications, such as military, medical life-support or life-sustaining equipment are specifically not recommended without additional processing by austriamicrosystems AG for each application. For shipments of less than 100 parts the manufacturing flow might show deviations from the standard production flow, such as test flow or test location.

The information furnished here by austriamicrosystems AG is believed to be correct and accurate. However, austriamicrosystems AG shall not be liable to recipient or any third party for any damages, including but not limited to personal injury, property damage, loss of profits, loss of use, interruption of business or indirect, special, incidental or consequential damages, of any kind, in connection with or arising out of the furnishing, performance or use of the technical data herein. No obligation or liability to recipient or any third party shall arise or flow out of austriamicrosystems AG rendering of technical or other services.

austriamicrosystems

Contact Information

Headquarters

austriamicrosystems AG
Tobelbaderstrasse 30
A-8141 Unterpremstaetten, Austria

Tel: +43 (0) 3136 500 0
Fax: +43 (0) 3136 525 01

For Sales Offices, Distributors and Representatives, please visit:

http://www.austriamicrosystems.com/contact

austria AG
Technical document still valid