# MS27478
## Solder Mount Hermetic Receptacle
### MIL-DTL-38999 Series II



**How To Order: *MS***

**Shell Style**
*MS27478 - Solder Mount, Series II*

**Connector Material / Finish**
*D - Carbon Steel - Fused Tin Finish*
*E - Stainless Steel - Passivate Finish*
*N - Stainless Steel - Nickel Finish*

**Contact Termination**
*P - Pin, Solder Cup*
*X - Pin, Eyelet*
*C - Pin, PCB Flex Feedthrough*
*S - Socket, Solder Cup*
*Z - Socket, Eyelet*
*D - Socket, PCB Flex Feedthrough*

**MS27478 Y 10 N 35 P A**

**Class**
*Y- Hermetic*

**Shell Size**
*8,10,12,14,16,18,20,22,24*

**Insert Arrangement**
MIL-DTL-38999 Series II Hermetic Inserts Per MIL-STD-1560; See Pages B-2 - B-4

**Alternate Key Position**
*A, B, C, D*
*(Omit for Normal)*

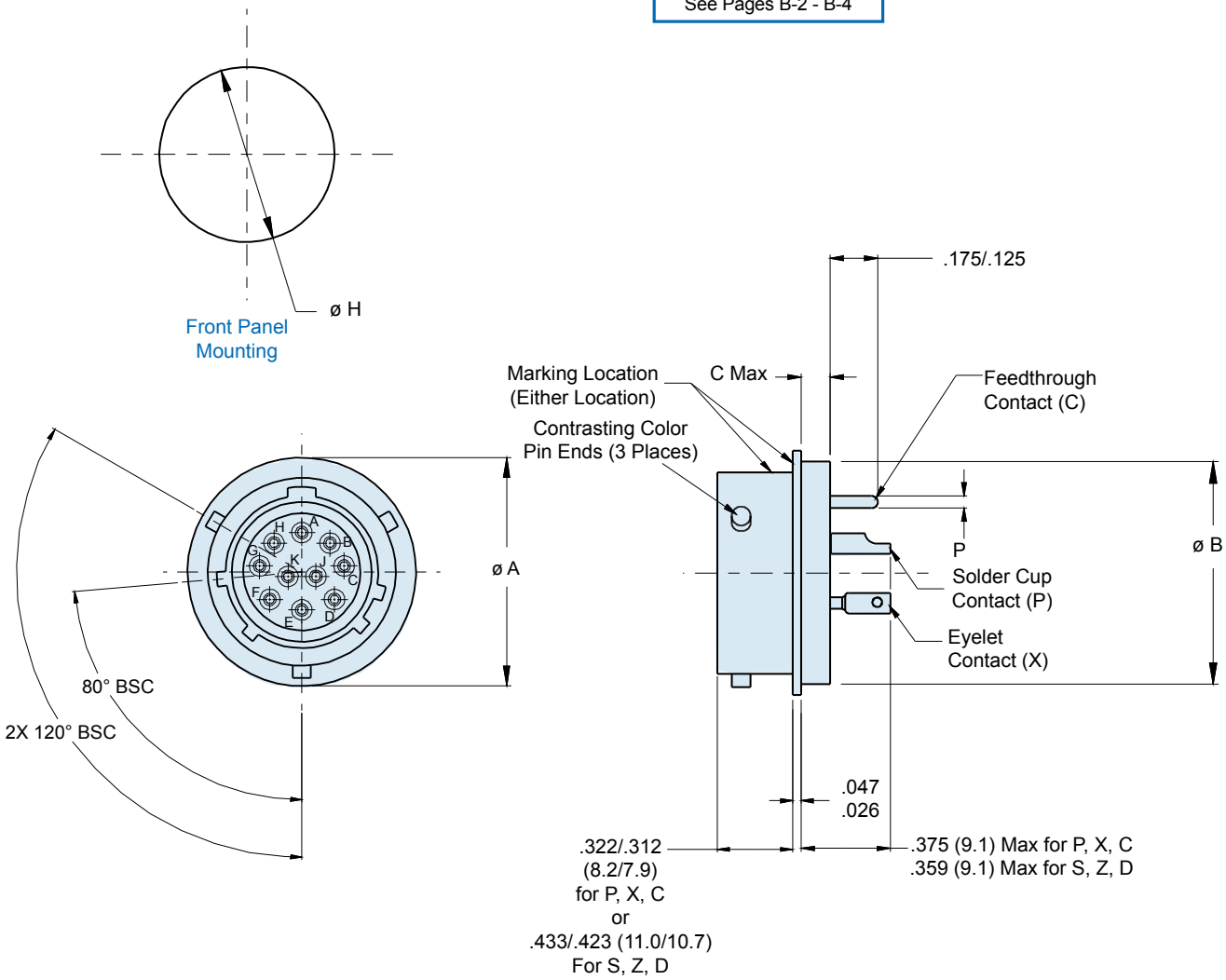


Dimensions in Inches (millimeters) are subject to change without notice.

© 2013 Glenair, Inc. U.S. CAGE Code 06324 Printed in U.S.A.