Part Number: 0194360412

Status: Active

Overview: mx150l_sealed_connector_system

Description: MX150L™ 4 Circuit Rear Mount Flange Sealed Panel Mount Plug for 8 AWG Wire, with Gasket

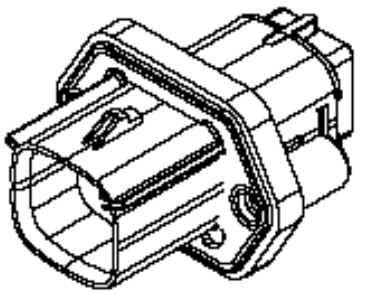

Series

image - Reference only

Documents:

3D Model
Drawing (PDF)
Product Specification PS-19432-001 (PDF)
RoHS Certificate of Compliance (PDF)

General

Product Family	Crimp Housings
Series	19436
Comments	Mat Seal Color Red, Polarized to Mating Part
Overview	mx150l_sealed_connector_system
Product Literature Order No	987650-2181
Product Name	MX150L™

Physical

Circuits (maximum)	4
Circuits Detail	2x2
Gender	Plug
Glow-Wire Compliant	No
Keying to Mating Part	N/A
Lock to Mating Part	Yes
Number of Rows	2
Packaging Type	Bag
Panel Mount	Yes
Pitch - Mating Interface (in)	0.300 In
Pitch - Mating Interface (mm)	7.62 mm
Pitch - Term. Interface (in)	0.300 In
Pitch - Term. Interface (mm)	7.62 mm
Polarized to Mating Part	No
Ports	1
Stackable	No
Temperature Range - Operating	-40°C to +125°C

Electrical

Current - Maximum per Contact	40A

Material Info

Reference - Drawing Numbers

Packaging Specification	PK-19436-001
Product Specification	PS-19432-001
Sales Drawing	SD-19436-002

EU RoHS
ELV and RoHS Compliant
REACH SVHC
Not Reviewed
Halogen-Free Status
Not Reviewed

China RoHS

Need more information on product environmental compliance?

Email productcompliance@molex.com
For a multiple part number RoHS Certificate of Compliance, click here

Please visit the Contact Us section for any non-product compliance questions.

Search Parts in this Series
19436Series

Mates With
19432 Receptacle

Use With

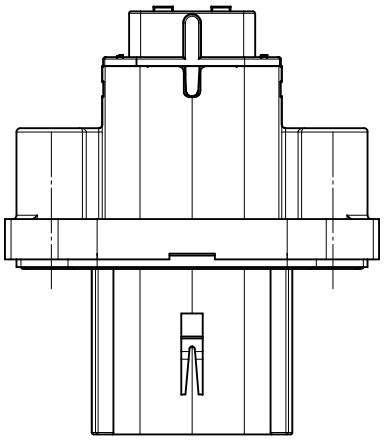

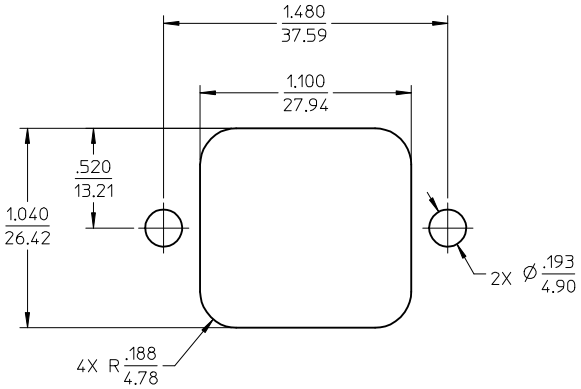

RECOMMENDED PANEL MOUNT OPENING, MAXIMUM PANEL THICKNESS .080/2.03

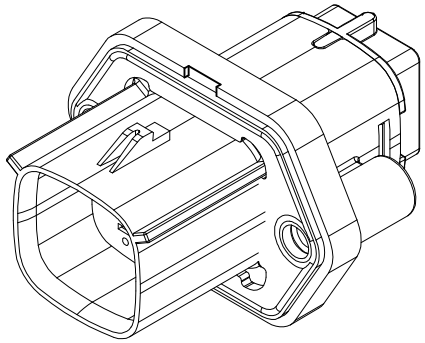

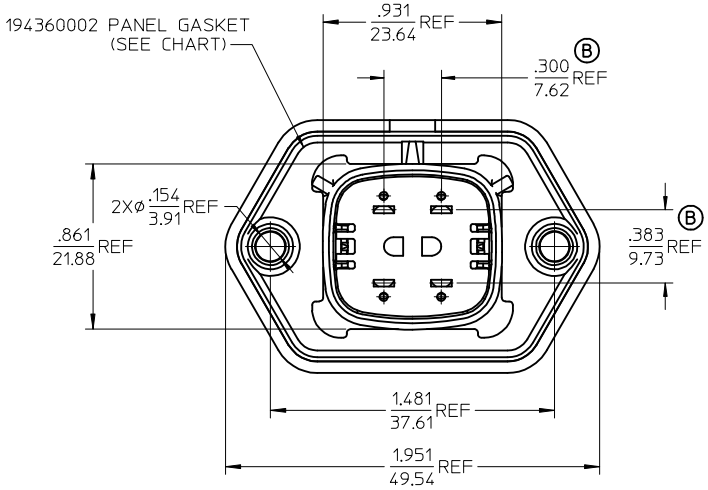

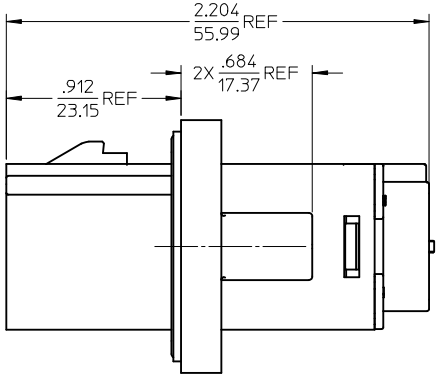

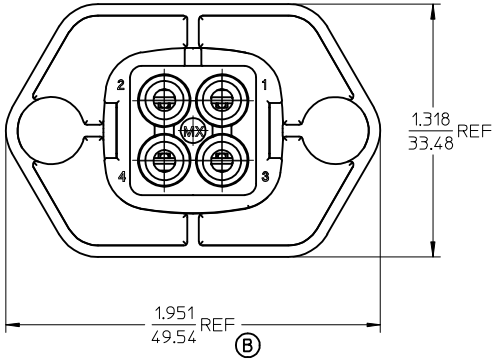

MATERIAL NUMBER	WIRE AWG	PANEL GASKET
19436-0414	8	NO
19436-0413	12-10	
19436-0412	8	YES
19436-0411	12-10	

NOTES:

1. MATERIALS:
   HOUSING: POLYESTER (PBT), GLASS FILLED, UL94 V-0. COLOR: BLACK.
   GASKET MATERIAL: SILICONE RUBBER. COLOR: BLACK
2. (B) PRODUCT SPECIFICATION: PS-19432-001
3. PACKAGING SPECIFICATION: PK-19436-001.
4. USE WITH MALE CRIMP TERMINAL SERIES 19431.
5. MATES WITH 19432 SERIES RECEPTACLE ASSEMBLIES.
6. RECOMMENDED MOUNTING HARDWARE: (2)#10 X .62/18.9 LONG PLASTIC THREAD CUTTING SCREWS. RECOMMENDED TORQUE 15-17 IN-LBS. SUGGESTED SOURCE: ITW SHAKEPROOF INDUSTRIAL BOSSCREW OR EQUIVALENT.
7. ASSEMBLY IS ROHS COMPLIANT.

RVSD NOTES& UPDATED DIMS
EC NO: WNA2010-0278 2009/10/13
DRWN:WLEUNG 2009/10/22
CHKD:DTITUS 2009/10/22
APPR:DTITUS
DESCRIPTION
B
REV

QUALITY SYMBOLS
▼=0
▽(C)=0

GENERAL TOLERANCES (UNLESS SPECIFIED)

	mm	INCH
4 PLACES	± ---	± ---
3 PLACES	± ---	± .015
2 PLACES	± 0.38	± ---
1 PLACE	± ---	± ---
ANGULAR ± 1 °		

DRAFT WHERE APPLICABLE MUST REMAIN WITHIN DIMENSIONS

DIMENSION STYLE: IN/MM
SCALE: 2:1
DESIGN UNITS: INCH
THIRD ANGLE PROJECTION

DRAWN BY: DMYRICK DATE: 2007/4/23
CHECKED BY: JPAWLICKI DATE: 2007/4/23
APPROVED BY: DTITUS DATE: 2009/10/22

TITLE: 4 WAY SEALED PLUG PANEL MOUNT ASSEMBLY, 12-10 & 8 AWG

molex MOLEX INCORPORATED

MATERIAL NO.: SEE CHART
DOCUMENT NO.: SD-19436-002
SHEET NO.: 1 OF 1
SIZE: C

THIS DRAWING CONTAINS INFORMATION THAT IS PROPRIETARY TO MOLEX INCORPORATED AND SHOULD NOT BE USED WITHOUT WRITTEN PERMISSION