SHEET OF

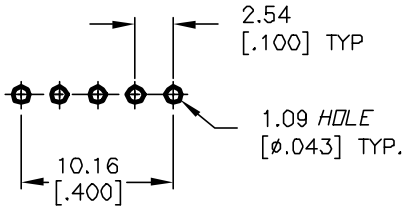

RECOMMENDED PCB LAYOUT

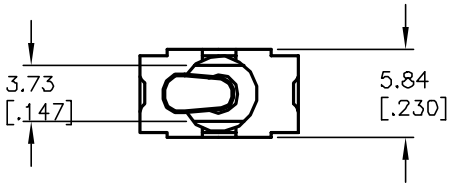

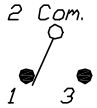

SPDT CIRCUIT
CONTACT CONFIGURATION

SWITCH FUNCTION		
POS. 1	POS. 2	POS. 3
ON	NONE	ON
2-3	OPEN	2-1

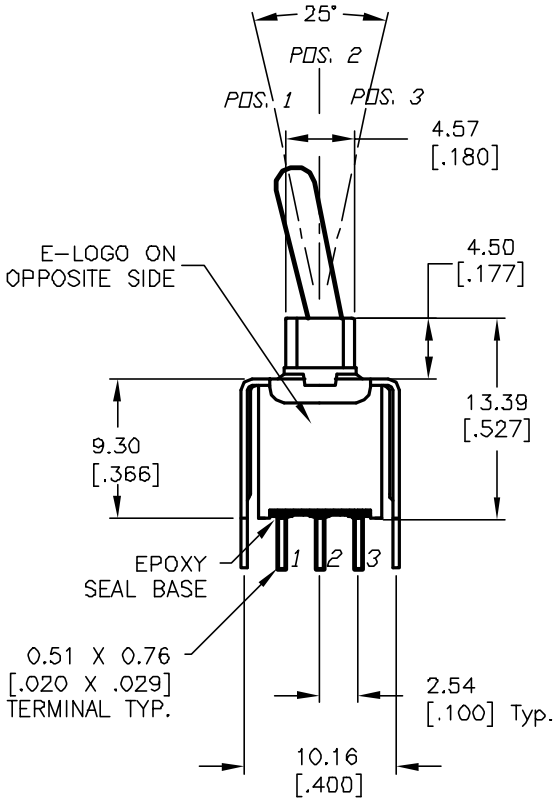

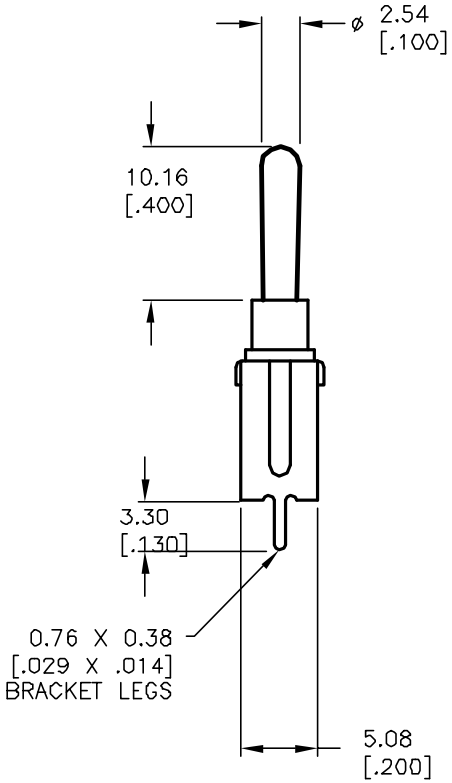

NOTES:

1. ALL DIMENSIONS IN MM [INCH]
2. GENERAL TOLERANCE: X.X=±0.4
   X.XX=±0.25
3. TERMINAL NUMBERS FOR REF ONLY
4. RATING: 0.4VA @20VAC or DC
5. ▲ FIXED TERM. & MOVING CONTACT:
   COPPER ALLOY W/GOLD PLATE over
   NICKEL PLATE.
6. ELECTRIC LIFE: 50,000 make-and-break cycles
   at full load.
7. INSULATION RESISTANCE: 1,000 Mega-ohm min.
8. DIELECTRIC STRENGTH: 1,000 V RMS @sea level.
9. OPERATING TEMP.: -30°C to +85°C

REV.	ECN No.	DESCRIPTION	DATE	CHKD
B	12052	REVISED AND REDRAWN	4/10/02	CB

THE INFORMATION CONTAINED IN THIS DOCUMENT
IS PROPRIETARY TO E-SWITCH AND IS
NOT TO BE COPIED OR TRANSFERRED

E-SWITCH®

TITLE 200A WMSP-1 T1 A1 VS2 R E (GOLD CONTACTS)

SCALE	DATE	DR	DWG	REV
2:1	4/10/02	CB	T201226	B