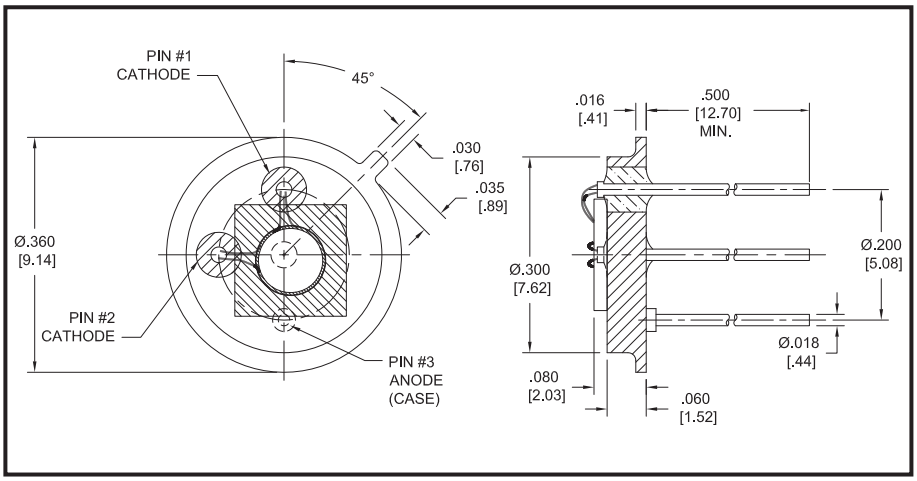

Dimensions are in inch [metric] units.

FEATURES

- Circular active area
- TO-39, 3 pin package
- Excellent stability after EUV exposure
- Windowless package for responsivity to 1nm

ELECTRO-OPTICAL CHARACTERISTICS AT 25°C

PARAMETERS	TEST CONDITIONS	MIN	TYP	MAX	UNITS
Active Area			Ø2.5		mm^2
Responsivity, $\mathcal{R}$	See attached graph				
Shunt Resistance, Rsh	@ ± 10 mV	20			MOhms
Reverse Breakdown Voltage, V_R	$I_R = 1\ \mu A$		20		Volts
Capacitance, C	$V_R = 0V$			1	nF
Response Time, tr	RL = 50Ω , $V_R = 15V$		1	2	nsec

THERMAL PARAMETERS

STORAGE AND OPERATING TEMPERATURE RANGE	
Ambient	-10° TO 40°C
Nitrogen or Vacuum	-20°C TO 80°C
Maximum Junction Temperature	70°C
Lead Soldering Temperature[1]	260°C

[1]0.08" from case for 10 seconds

OPTO DIODE
1260 Calle Suerte, Camarillo, California 93012
Phone: (805) 499-0335, Fax: (805) 499-8108
Email: sales@optodiode.com, Website: www.optodiode.com

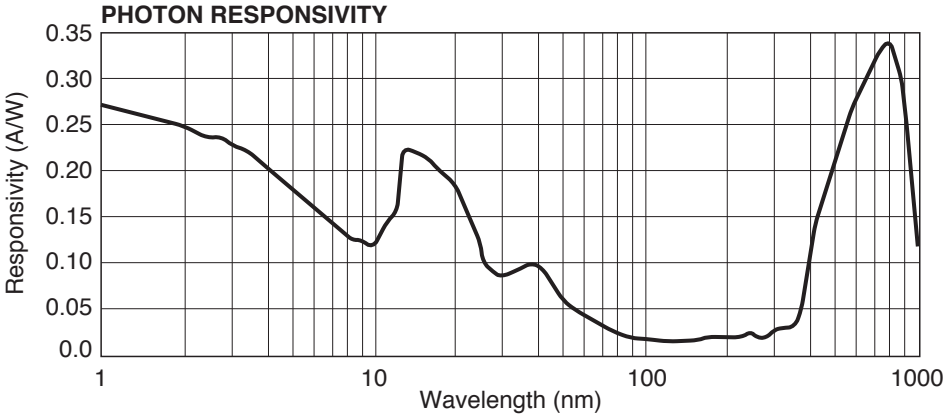

OPTO DIODE
1260 Calle Suerte, Camarillo, California 93012
Phone: (805) 499-0335, Fax: (805) 499-8108
Email: sales@optodiode.com, Website: www.optodiode.com