TSV91x Rail-to-Rail Input/Output, 8-MHz Operational Amplifiers

1 Features

- Rail-to-rail input and output
- Low noise: 18 nV/√Hz at 1 kHz
- Low power consumption: 550 µA (typical)
- High-gain bandwidth: 8 MHz
- Operating supply voltage from 2.5 V to 5.5 V
- Low input bias current: 1 pA (typical)
- Low input offset voltage: 1.5 mV (maximum)
- Low offset voltage drift: ±0.5 µV/°C (typical)
- ESD internal protection: ±4-kV human-body model (HBM)
- Extended temperature range: –40°C to 125°C

2 Applications

- Battery-powered applications
- Motor control
- Power modules
- HVAC: heating, ventilating, and air conditioning
- Washing machines
- Refrigerators
- Medical instrumentation
- Active filters
- Sensor signal conditioning
- Audio receiver
- Automotive infotainment

Low-Side Motor Control

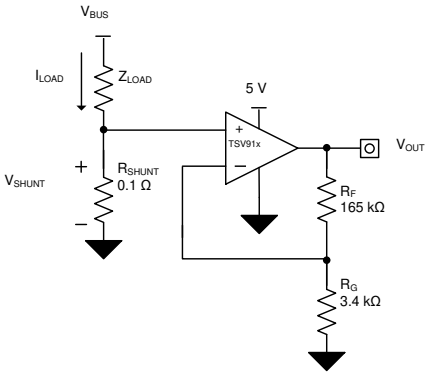

3 Description

The TSV91x family, which includes single-, dual-, and quad-channel operational amplifiers (op amps), is specifically designed for general-purpose applications. Featuring rail-to-rail input and output (RRIO) swings, wide bandwidth (8 MHz), and low offset voltage (0.3 mV, typical), this family is designed for a variety of applications that require a good balance between speed and power consumption. The op amps are unity-gain stable and feature an ultra-low input bias current, which enables the family to be used in applications with high-source impedances. The low input bias current allows the devices to be used for sensor interfaces, battery-supplied and portable applications, and active filtering.

The robust design of the TSV91x provides ease-of-use to the circuit designer. Features include a unity-gain stable, integrated RFI-EMI rejection filter, no phase reversal in overdrive condition, and high electrostatic discharge (ESD) protection (4-kV HBV).

Device Information(1)

PART NUMBER	PACKAGE	BODY SIZE (NOM)
TSV911	SOT-23 (5)	1.60 mm × 2.90 mm
	SC70 (5)	1.25 mm × 2.00 mm
TSV912	SOIC (8)	3.91 mm × 4.90 mm
	WSON (8)	2.00 mm × 2.00 mm
	SOT-23 (8)	1.60 mm × 2.90 mm
TSV914	SOIC (14)	8.65 mm × 3.91 mm
	TSSOP (14)	4.40 mm × 5.00 mm

(1) For all available packages, see the orderable addendum at the end of the data sheet.

Small-Signal Overshoot vs Load Capacitance

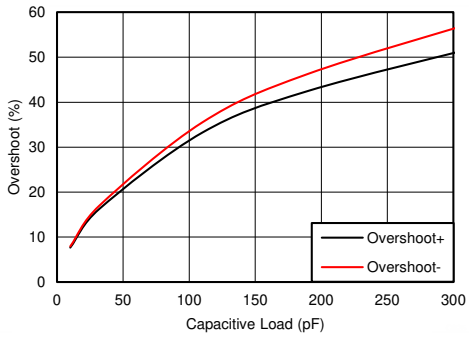

An IMPORTANT NOTICE at the end of this data sheet addresses availability, warranty, changes, use in safety-critical applications, intellectual property matters and other important disclaimers. PRODUCTION DATA.

Table of Contents

1 **Features** ... 1
2 **Applications** ... 1
3 **Description** ... 1
4 **Revision History** ... 2
5 **Device Comparison Table** ... 4
6 **Pin Configuration and Functions** ... 5
7 **Specifications** ... 8
7.1 Absolute Maximum Ratings ... 8
7.2 ESD Ratings ... 8
7.3 Recommended Operating Conditions ... 8
7.4 Thermal Information: TSV911 ... 8
7.5 Thermal Information: TSV912 ... 9
7.6 Thermal Information: TSV914 ... 9
7.7 Electrical Characteristics: V_S (Total Supply Voltage) = (V+) – (V–) = 2.5 V to 5.5 V ... 10
7.8 Typical Characteristics ... 12
8 **Detailed Description** ... 18
8.1 Overview ... 18
8.2 Functional Block Diagram ... 18
8.3 Feature Description ... 19
8.4 Device Functional Modes ... 19
9 **Application and Implementation** ... 20
9.1 Application Information ... 20
9.2 Typical Application ... 20
10 **Power Supply Recommendations** ... 22
10.1 Input and ESD Protection ... 22
11 **Layout** ... 23
11.1 Layout Guidelines ... 23
11.2 Layout Example ... 23
12 **Device and Documentation Support** ... 24
12.1 Documentation Support ... 24
12.2 Related Links ... 24
12.3 Receiving Notification of Documentation Updates 24
12.4 Community Resources ... 24
12.5 Trademarks ... 24
12.6 Electrostatic Discharge Caution ... 24
12.7 Glossary ... 24
13 **Mechanical, Packaging, and Orderable Information** ... 24

4 Revision History

Changes from Revision C (January 2019) to Revision D	Page
• Added SOT-23 (8) (DDF) package information to data sheet	1

Changes from Revision B (April 2018) to Revision C	Page
• Deleted preview notations for TSV911IDBV	1
• Added SC70 package information to *Device Information* table	1
• Deleted package preview notation from TSV911 DBV (SOT-23) package	4
• Added DCK (SC70) package information to *Device Comparison Table*	4
• Deleted TSV911 DBV (SOT-23) package preview notation from *Pin Configuration and Functions* section	5
• Added TSV911 DCK (SC70) package drawing and pin functions	5
• Added TSV911 DBV and DCK package thermal information	8

Changes from Revision A (October 2017) to Revision B	Page
• Changed TSV914 14-pin TSSOP package from preview to production data in *Device Information* table	1
• Deleted package preview note from 8-pin WSON package in *Device Information* table	1
• Deleted package preview note from PW (TSSOP) package from *Device Comparison* table	4
• Deleted package preview note from DSG (WSON) package from *Device Comparison* table	4
• Deleted package preview note from TSV912 DSG package pinout drawing in *Pin Configuration and Functions* section	6
• Added DGK (VSSOP) thermal information to *Thermal Information: TSV912* table	9
• Deleted package preview note to TSV914 PW (TSSOP) package *Thermal Information* table	9
• Added PW (TSSOP) package information to *Thermal Information: TSV914* table	9
• Changed TSV914 PW (TSSOP) junction-to-ambient thermal resistance from 135.8°C/W to 205.8°C/W	9
• Changed TSV914 PW (TSSOP) junction-to-case(top) thermal resistance from 64°C/W to 106.7°C/W	9
• Changed TSV914 PW (TSSOP) junction-to-board thermal resistance from 79°C/W to 133.9°C/W	9

Copyright © 2017–2019, Texas Instruments Incorporated

- Changed TSV914 PW (TSSOP) junction-to-top characterization parameter from 15.7°C/W to 34.4°C/W 9
- Changed TSV914 PW (TSSOP) junction-to-board characterization parameter from 78.4°C/W to 132.6°C/W 9

Changes from Original (July 2017) to Revision A **Page**

- Changed TSV914 14-pin SOIC package from preview to production data in *Device Information* table..... 1
- Deleted TSV911 SC70, SOT-553 and SOIC packages from *Device Information* table 1
- Deleted TSV912 VSSOP packages from *Device Information* table 1
- Deleted TSV911 SC70 and SOIC packages from pinout drawings and *Pin Functions* table 5
- Deleted TSV912 DGK and DGS packages from pinout images *Pin Functions* table 6
- Deleted package preview note from TSV914 pinout drawing and *Pin Functions* table 7
- Added TSV914 *Thermal Information* table 9
- Added 2017 copyright notice to Figure 35..... 20

5 Device Comparison Table

DEVICE	NO. OF CHANNELS	PACKAGE LEADS					
		DBV	DCK	D	DSG	PW	DDF
TSV911	1	5	5	—	—	—	—
TSV912	2	—	—	8	8	—	8
TSV914	4	—	—	14	—	14	—

Copyright © 2017–2019, Texas Instruments Incorporated

6 Pin Configuration and Functions

TSV911 DBV Package
5-Pin SOT-23
Top View

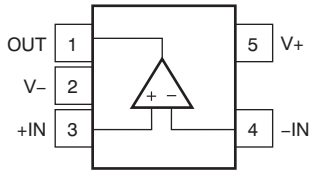

TSV911 DCK Package
5-Pin SC70
Top View

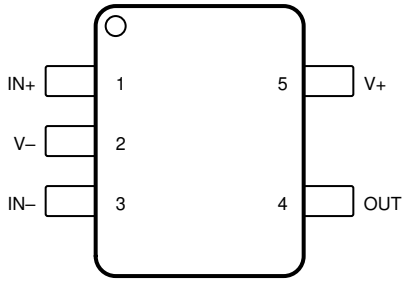

Not to scale

Pin Functions: TSV911

PIN			I/O	DESCRIPTION
NAME	NO.			
	DBV (SOT-23)	DCK (SC70)		
–IN	4	3	I	Inverting input
+IN	3	1	I	Noninverting input
OUT	1	4	O	Output
V–	2	2	—	Negative (lowest) supply or ground (for single-supply operation)
V+	5	5	—	Positive (highest) supply

TSV912 D, DGK, DDF Packages
8-Pin SOIC, VSSOP
Top View

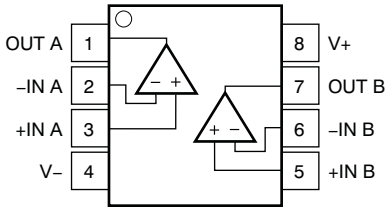

TSV912 DSG Package (1)
8-Pin WSON With Exposed Thermal Pad
Top View

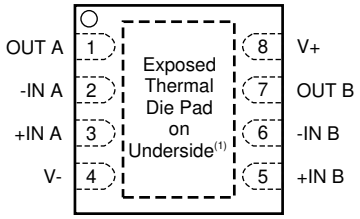

(1) Connect exposed thermal pad to V–. See *Packages with an Exposed Thermal Pad* section for more information.

Pin Functions: TSV912

PIN		I/O	DESCRIPTION
NAME	NO.		
–IN A	2	I	Inverting input, channel A
+IN A	3	I	Noninverting input, channel A
–IN B	6	I	Inverting input, channel B
+IN B	5	I	Noninverting input, channel B
OUT A	1	O	Output, channel A
OUT B	7	O	Output, channel B
V–	4	—	Negative (lowest) supply or ground (for single-supply operation)
V+	8	—	Positive (highest) supply

Copyright © 2017–2019, Texas Instruments Incorporated

TSV914 D, PW Packages
14-Pin SOIC, TSSOP
Top View

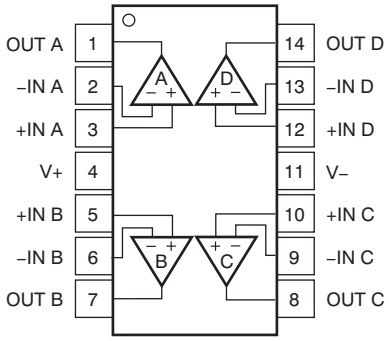

Pin Functions: TSV914

PIN		I/O	DESCRIPTION
NAME	NO.		
–IN A	2	I	Inverting input, channel A
+IN A	3	I	Noninverting input, channel A
–IN B	6	I	Inverting input, channel B
+IN B	5	I	Noninverting input, channel B
–IN C	9	I	Inverting input, channel C
+IN C	10	I	Noninverting input, channel C
–IN D	13	I	Inverting input, channel D
+IN D	12	I	Noninverting input, channel D
OUT A	1	O	Output, channel A
OUT B	7	O	Output, channel B
OUT C	8	O	Output, channel C
OUT D	14	O	Output, channel D
V–	11	—	Negative (lowest) supply or ground (for single-supply operation)
V+	4	—	Positive (highest) supply

7 Specifications

7.1 Absolute Maximum Ratings

over operating free-air temperature (unless otherwise noted)[1]

			MIN	MAX	UNIT
Supply voltage				6	V
Signal input pins	Voltage[2]	Common-mode	(V–) – 0.5	(V+) + 0.5	V
		Differential		(V+) – (V–) + 0.2	
	Current[2]		–10	10	mA
Output short-circuit[3]			Continuous		mA
Specified, T_A			–40	125	°C
Junction, T_J				150	°C
Storage, T_{stg}			–65	150	°C

(1) Stresses beyond those listed under *Absolute Maximum Ratings* may cause permanent damage to the device. These are stress ratings only, and functional operation of the device at these or any other conditions beyond those indicated under *Recommended Operating Conditions* is not implied. Exposure to absolute-maximum-rated conditions for extended periods may affect device reliability.
(2) Input pins are diode-clamped to the power-supply rails. Current limit input signals that can swing more than 0.5 V beyond the supply rails to 10 mA or less.
(3) Short-circuit to ground, one amplifier per package.

7.2 ESD Ratings

over operating free-air temperature range (unless otherwise noted)

			VALUE	UNIT
$V_{(ESD)}$	Electrostatic discharge	Human-body model (HBM), per ANSI/ESDA/JEDEC JS-001[1]	±4000	V
		Charged-device model (CDM), per JEDEC specification JESD22-C101[2]	±1500	

(1) JEDEC document JEP155 states that 500-V HBM allows safe manufacturing with a standard ESD control process.
(2) JEDEC document JEP157 states that 250-V CDM allows safe manufacturing with a standard ESD control process.

7.3 Recommended Operating Conditions

over operating free-air temperature range (unless otherwise noted)

		MIN	MAX	UNIT
V_S	Supply voltage	2.5	5.5	V
	Specified temperature	–40	125	°C

7.4 Thermal Information: TSV911

THERMAL METRIC[1]		TSV911		UNIT
		DBV (SOT-23)	DCK (SC70)	
		5 PINS	5 PINS	
$R_{\theta JA}$	Junction-to-ambient thermal resistance	221.7	263.3	°C/W
$R_{\theta JC(top)}$	Junction-to-case(top) thermal resistance	144.7	75.5	°C/W
$R_{\theta JB}$	Junction-to-board thermal resistance	49.7	51.0	°C/W
ψ_{JT}	Junction-to-top characterization parameter	26.1	1.0	°C/W
ψ_{JB}	Junction-to-board characterization parameter	49.0	50.3	°C/W

(1) For more information about traditional and new thermal metrics, see the *Semiconductor and IC Package Thermal Metrics* application report.

Copyright © 2017–2019, Texas Instruments Incorporated

7.5 Thermal Information: TSV912

THERMAL METRIC[1]		TSV912				UNIT
		D (SOIC)	DGK (VSSOP)	DSG (WSON)	DDF (SOT-23)	
		8 PINS	8 PINS	8 PINS	8 PINS	
$R_{\theta JA}$	Junction-to-ambient thermal resistance	157.6	201.2	94.4	184.4	°C/W
$R_{\theta JC(top)}$	Junction-to-case(top) thermal resistance	104.6	85.7	116.5	112.8	°C/W
$R_{\theta JB}$	Junction-to-board thermal resistance	99.7	122.9	61.3	99.9	°C/W
ψ_{JT}	Junction-to-top characterization parameter	55.6	21.2	13	18.7	°C/W
ψ_{JB}	Junction-to-board characterization parameter	99.2	121.4	61.7	99.3	°C/W
$R_{\theta JC(bot)}$	Junction-to-case(bottom) thermal resistance	N/A	N/A	34.4	N/A	°C/W

(1) For more information about traditional and new thermal metrics, see the *Semiconductor and IC Package Thermal Metrics* application report.

7.6 Thermal Information: TSV914

THERMAL METRIC[1]		TSV914		UNIT
		D (SOIC)	PW (TSSOP)	
		14 PINS	14 PINS	
$R_{\theta JA}$	Junction-to-ambient thermal resistance	106.9	205.8	°C/W
$R_{\theta JC(top)}$	Junction-to-case (top) thermal resistance	69	106.7	°C/W
$R_{\theta JB}$	Junction-to-board thermal resistance	63	133.9	°C/W
ψ_{JT}	Junction-to-top characterization parameter	25.9	34.4	°C/W
ψ_{JB}	Junction-to-board characterization parameter	62.7	132.6	°C/W

(1) For more information about traditional and new thermal metrics, see the *Semiconductor and IC Package Thermal Metrics* application report.

7.7 Electrical Characteristics: V_S (Total Supply Voltage) = (V+) – (V–) = 2.5 V to 5.5 V

at T_A = 25°C, R_L = 10 kΩ connected to V_S / 2, V_{CM} = V_S / 2, and V_{OUT} = V_S / 2 (unless otherwise noted)

PARAMETER		TEST CONDITIONS	MIN	TYP	MAX	UNIT
OFFSET VOLTAGE						
V_{OS}	Input offset voltage	V_S = 5 V		±0.3	±1.5	mV
		V_S = 5 V T_A = –40°C to 125°C			±3	
dV_{OS}/dT	Drift	V_S = 5 V T_A = –40°C to 125°C		±0.5		µV/°C
PSRR	Power-supply rejection ratio	V_S = 2.5 V – 5.5 V, V_{CM} = (V–)		±7		µV/V
	Channel separation, DC	At DC		100		dB
INPUT VOLTAGE RANGE						
V_{CM}	Common-mode voltage range	V_S = 2.5 V to 5.5 V	(V–) – 0.1		(V+) + 0.1	V
CMRR	Common-mode rejection ratio	V_S = 5.5 V (V–) – 0.1 V < V_{CM} < (V+) – 1.4 V T_A = –40°C to 125°C	80	103		dB
		V_S = 5.5 V, V_{CM} = –0.1 V to 5.6 V T_A = –40°C to 125°C	57	87		
		V_S = 2.5 V, (V–) – 0.1 V < V_{CM} < (V+) – 1.4 V T_A = –40°C to 125°C		88		
		V_S = 2.5 V, V_{CM} = –0.1 V to 1.9 V T_A = –40°C to 125°C		81		
INPUT BIAS CURRENT						
I_B	Input bias current			±1		pA
I_{OS}	Input offset current			±0.05		pA
NOISE						
E_n	Input voltage noise (peak-to-peak)	V_S = 5 V, f = 0.1 Hz to 10 Hz		4.77		$µV_{PP}$
e_n	Input voltage noise density	V_S = 5 V, f = 10 kHz		12		nV/√Hz
		V_S = 5 V, f = 1 kHz		18		
i_n	Input current noise density	f = 1 kHz		10		fA/√Hz
INPUT CAPACITANCE						
C_{ID}	Differential			2		pF
C_{IC}	Common-mode			4		pF
OPEN-LOOP GAIN						
A_{OL}	Open-loop voltage gain	V_S = 2.5 V, (V–) + 0.04 V < V_O < (V+) – 0.04 V R_L = 10 kΩ		100		dB
		V_S = 5.5 V, (V–) + 0.05 V < V_O < (V+) – 0.05 V R_L = 10 kΩ	104	130		
		V_S = 2.5 V, (V–) + 0.06 V < V_O < (V+) – 0.06 V R_L = 2 kΩ		100		
		V_S = 5.5 V, (V–) + 0.15 V < V_O < (V+) – 0.15 V R_L = 2 kΩ		130		
FREQUENCY RESPONSE						
GBP	Gain bandwidth product	V_S = 5 V, G = 1		8		MHz
φ_m	Phase margin	V_S = 5 V, G = 1		55		°
SR	Slew rate	V_S = 5 V, G = 1 R_L = 2 kΩ C_L = 100 pF		4.5		V/µs
t_S	Settling time	To 0.1%, V_S = 5 V, 2-V step , G = 1 C_L = 100 pF		0.5		µs
		To 0.01%, V_S = 5 V, 2-V step , G = 1 C_L = 100 pF		1		
t_{OR}	Overload recovery time	V_S = 5 V, V_{IN} × gain > V_S		0.2		µs
THD + N	Total harmonic distortion + noise (1)	V_S = 5 V, V_O = 1 V_{RMS}, G = 1, f = 1 kHz		0.0008%		
OUTPUT						
V_O	Voltage output swing from supply rails	V_S = 5.5 V, R_L = 10 kΩ			15	mV
		V_S = 5.5 V, R_L = 2 kΩ			50	

(1) Third-order filter; bandwidth = 80 kHz at –3 dB.

Copyright © 2017–2019, Texas Instruments Incorporated

Electrical Characteristics: V_S (Total Supply Voltage) = (V+) – (V–) = 2.5 V to 5.5 V (continued)

at T_A = 25°C, R_L = 10 kΩ connected to V_S / 2, V_{CM} = V_S / 2, and V_{OUT} = V_S / 2 (unless otherwise noted)

PARAMETER		TEST CONDITIONS	MIN	TYP	MAX	UNIT
I_{SC}	Short-circuit current	V_S = 5 V		±50		mA
Z_O	Open-loop output impedance	V_S = 5 V, f = 10 MHz		100		Ω
POWER SUPPLY						
I_Q	Quiescent current per amplifier	V_S = 5.5 V, I_O = 0 mA		550	750	µA
		V_S = 5.5 V, I_O = 0 mA T_A = –40°C to 125°C			1100	

7.8 Typical Characteristics

at T_A = 25°C, V_S = 5.5 V, R_L = 10 kΩ connected to V_S / 2, V_{CM} = V_S / 2, and V_{OUT} = V_S / 2 (unless otherwise noted)

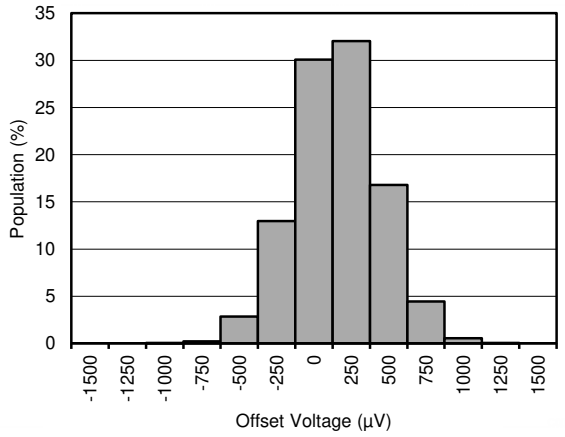

Figure 1. Offset Voltage Production Distribution

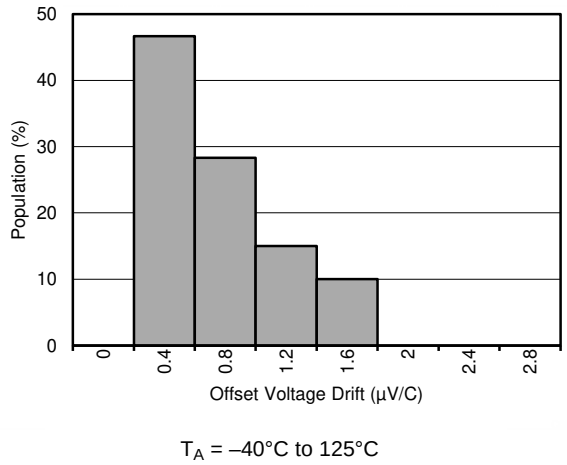

Figure 2. Offset Voltage Drift Distribution

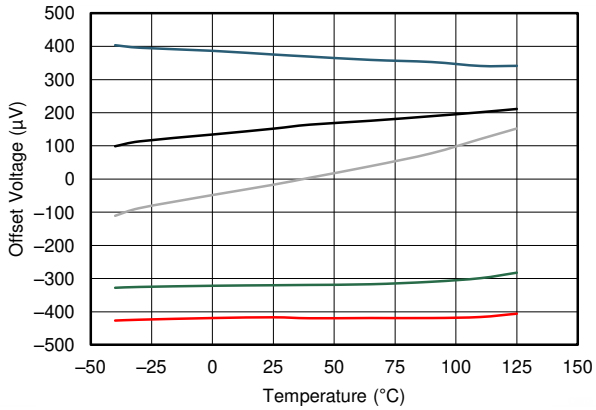

Figure 3. Offset Voltage vs Temperature

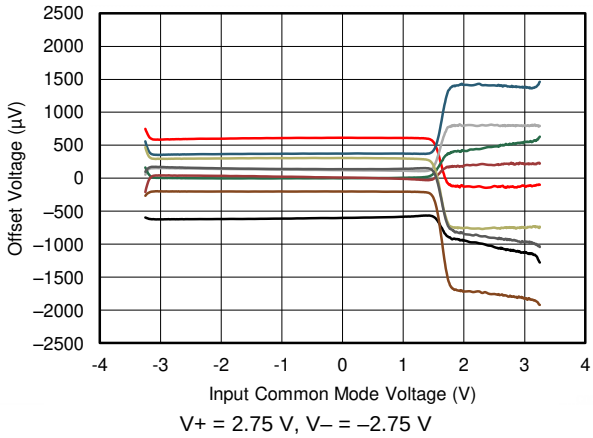

Figure 4. Offset Voltage vs Common-Mode Voltage

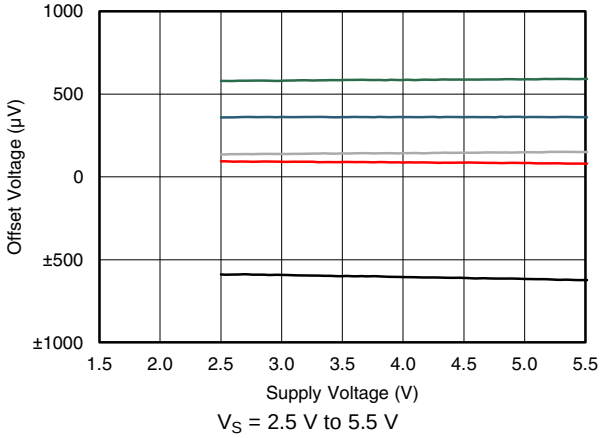

Figure 5. Offset Voltage vs Power Supply

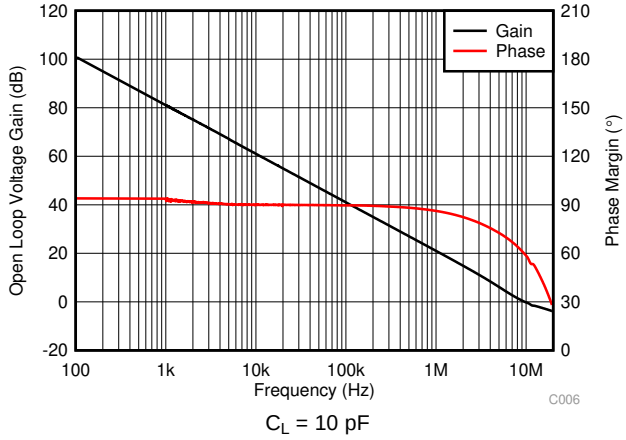

Figure 6. Open-Loop Gain and Phase vs Frequency

Copyright © 2017–2019, Texas Instruments Incorporated

Typical Characteristics (continued)

at T_A = 25°C, V_S = 5.5 V, R_L = 10 kΩ connected to V_S / 2, V_{CM} = V_S / 2, and V_{OUT} = V_S / 2 (unless otherwise noted)

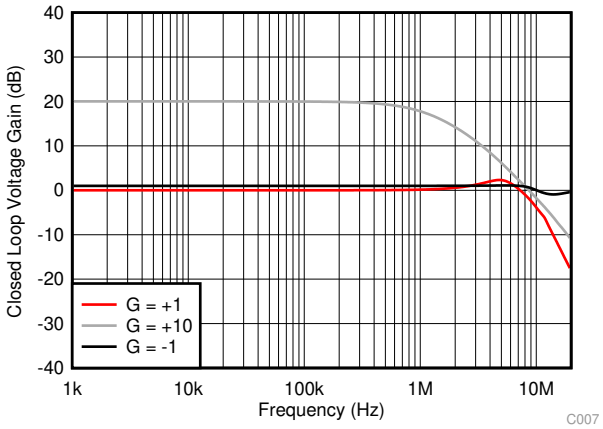

Figure 7. Closed-Loop Gain vs Frequency

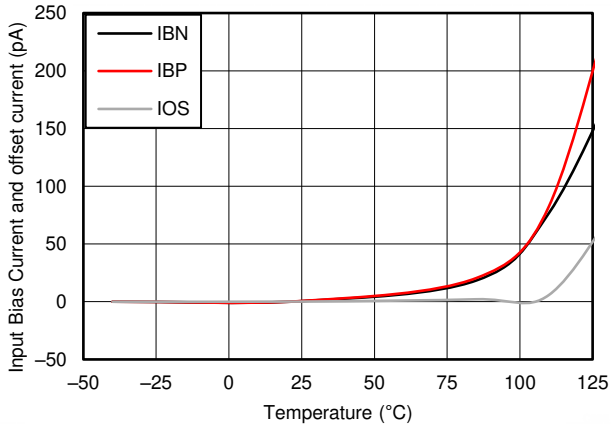

Figure 8. Input Bias Current vs Temperature

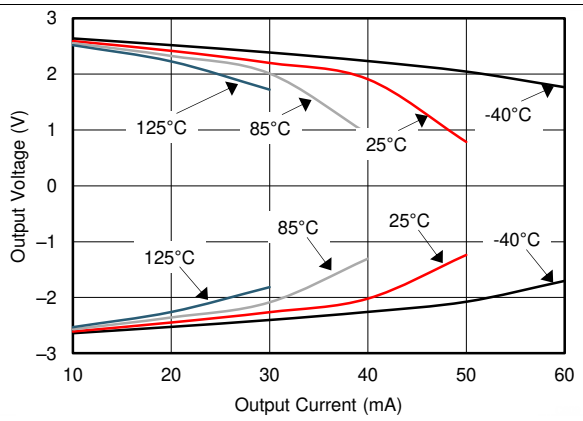

V+ = 2.75 V, V– = –2.75 V

Figure 9. Output Voltage Swing vs Output Current

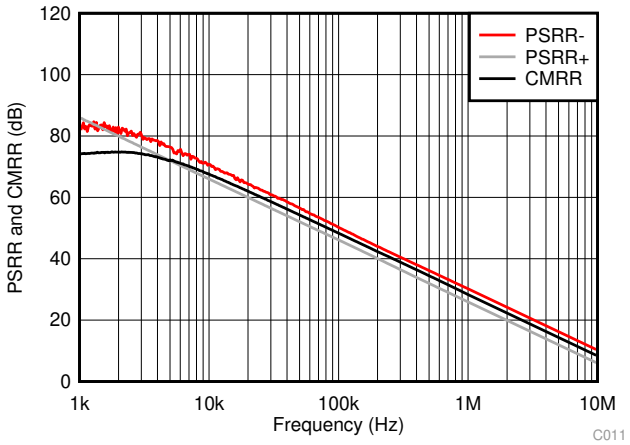

Figure 10. CMRR and PSRR vs Frequency (Referred to Input)

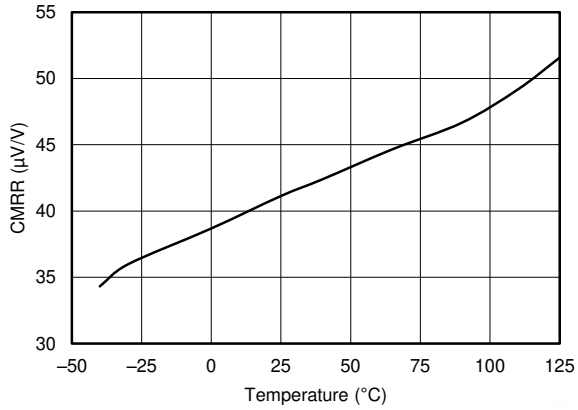

V_S = 5.5 V V_{CM} = (V–) – 0.1 V to (V+) + 0.1 V R_L= 10 kΩ

T_A= –40°C to 125°C

Figure 11. CMRR vs Temperature

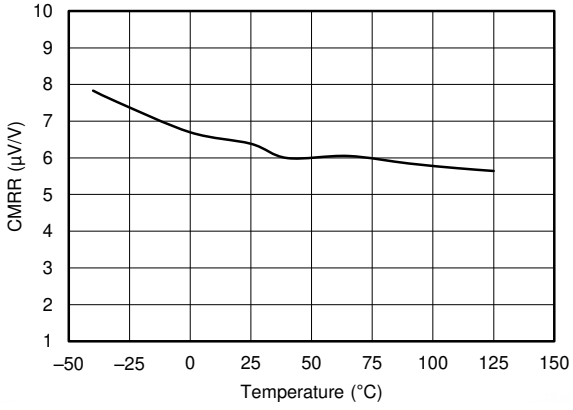

V_S = 5.5 V V_{CM} = (V–) –0.1 V to (V+) –1.4 V R_L= 10 kΩ

T_A= –40°C to 125°C

Figure 12. CMRR vs Temperature

Typical Characteristics (continued)

at T_A = 25°C, V_S = 5.5 V, R_L = 10 kΩ connected to V_S / 2, V_{CM} = V_S / 2, and V_{OUT} = V_S / 2 (unless otherwise noted)

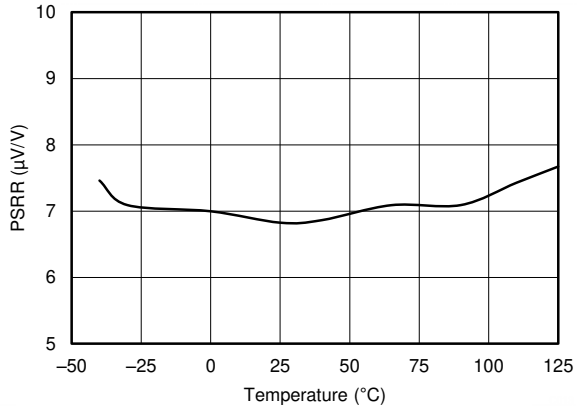

V_S = 2.5 V to 5.5 V

Figure 13. PSRR vs Temperature

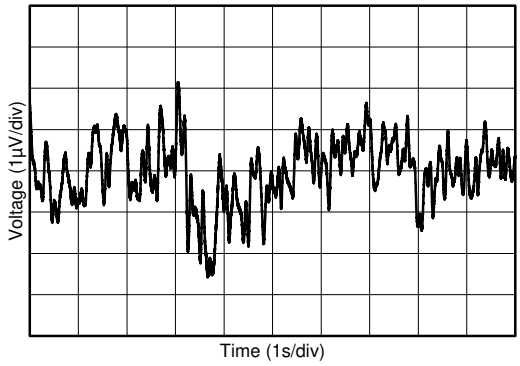

V_S = 2.5 V to 5.5 V

Figure 14. 0.1-Hz to 10-Hz Input Voltage Noise

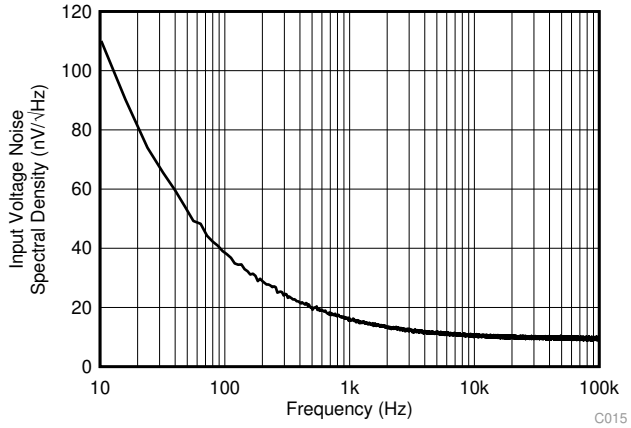

Figure 15. Input Voltage Noise Spectral Density vs Frequency

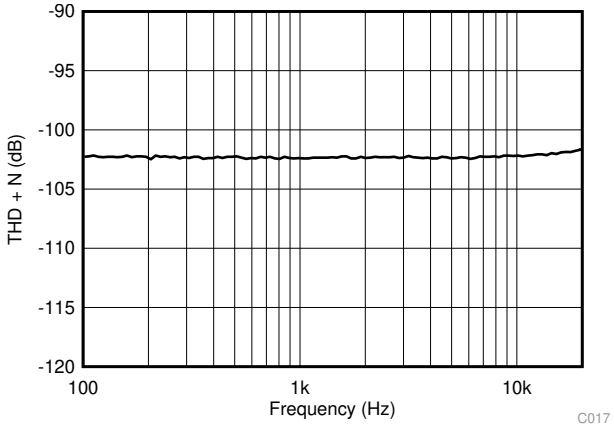

V_S = 5.5 V, V_{CM} = 2.5 V, R_L = 2 kΩ
G = 1, V_{OUT} = 0.5 V_{RMS}, BW = 80 kHz

Figure 16. THD + N vs Frequency

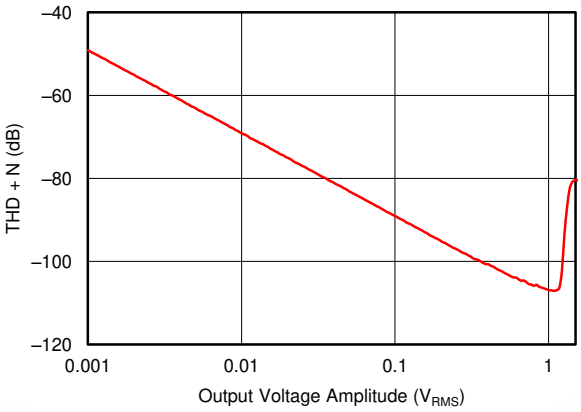

V_S = 5.5 V, V_{CM} = 2.5 V, R_L = 2 kΩ
G = 1, BW = 80 kHz, f = 1 kHz

Figure 17. THD + N vs Amplitude

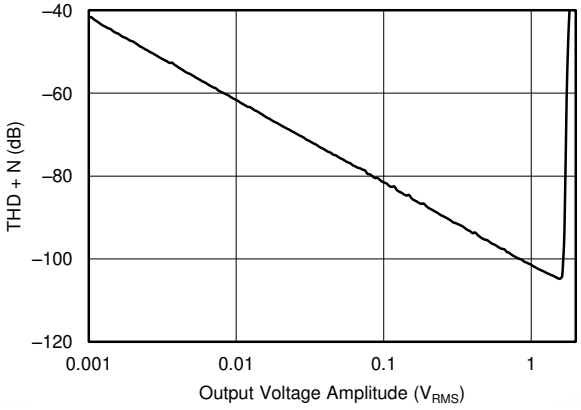

V_S = 5.5 V, V_{CM} = 2.5 V, R_L = 2 kΩ
G = –1, BW = 80 kHz, f = 1 kHz

Figure 18. THD + N vs Amplitude

Copyright © 2017–2019, Texas Instruments Incorporated

Typical Characteristics (continued)

at T_A = 25°C, V_S = 5.5 V, R_L = 10 kΩ connected to V_S / 2, V_{CM} = V_S / 2, and V_{OUT} = V_S / 2 (unless otherwise noted)

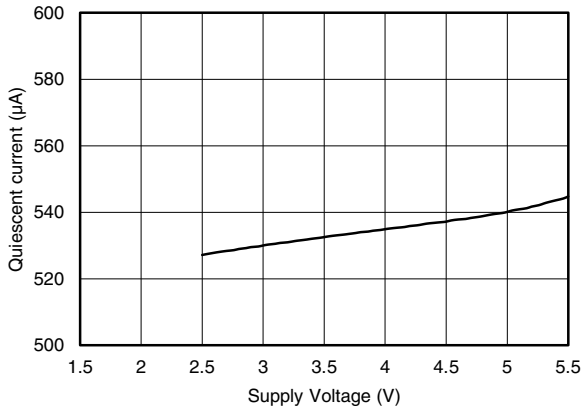

Figure 19. Quiescent Current vs Supply Voltage

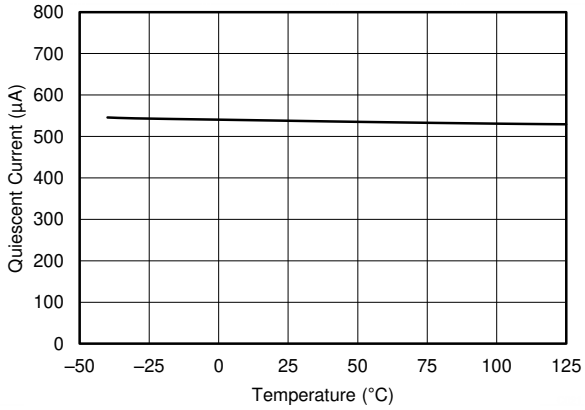

Figure 20. Quiescent Current vs Temperature

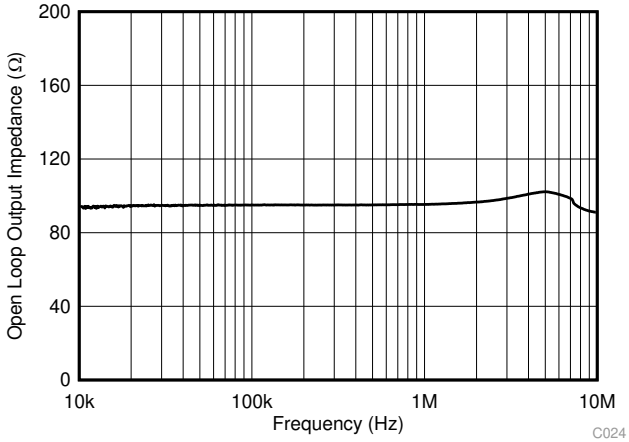

Figure 21. Open-Loop Output Impedance vs Frequency

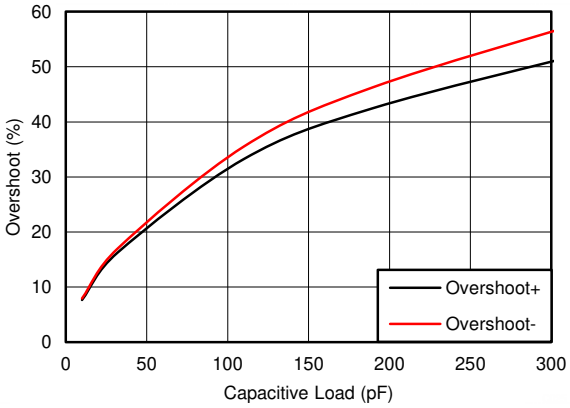

V+ = 2.75 V V– = –2.75 V G = 1 V/V
R_L = 10 kΩ V_{OUT} step = 100 mV_{p-p}

Figure 22. Small-Signal Overshoot vs Load Capacitance

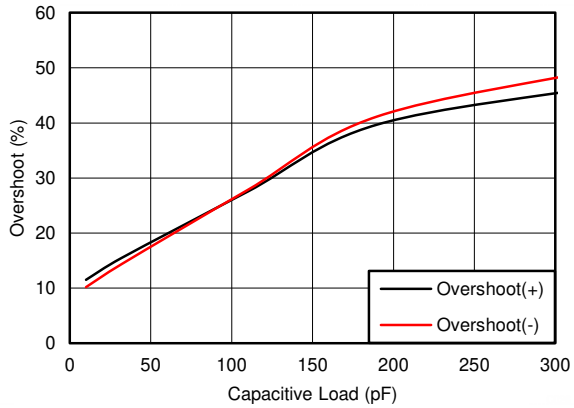

V+ = 2.75 V V– = –2.75 V R_L = 10 kΩ
G = –1 V/V V_{OUT} step = 100 mV_{p-p}

Figure 23. Small-Signal Overshoot vs Load Capacitance

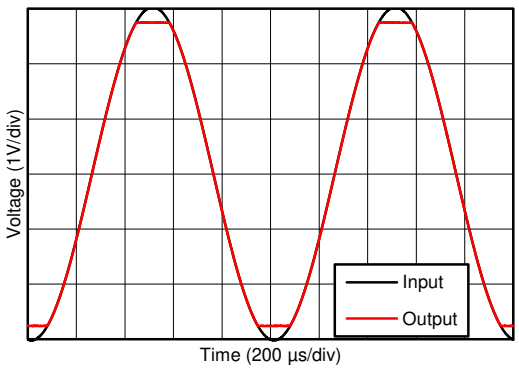

V+ = 2.75 V, V– = –2.75 V

Figure 24. No Phase Reversal

Typical Characteristics (continued)

at T_A = 25°C, V_S = 5.5 V, R_L = 10 kΩ connected to V_S / 2, V_{CM} = V_S / 2, and V_{OUT} = V_S / 2 (unless otherwise noted)

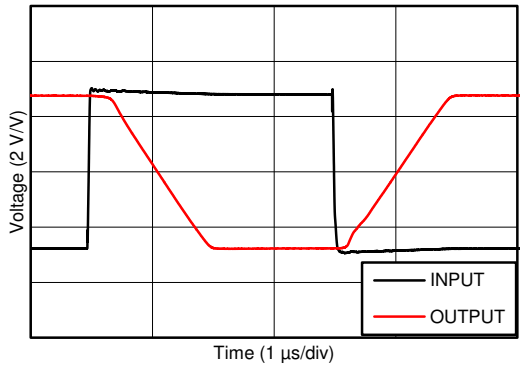

V+ = 2.75 V, V– = –2.75 V, G = –10 V/V

Figure 25. Overload Recovery

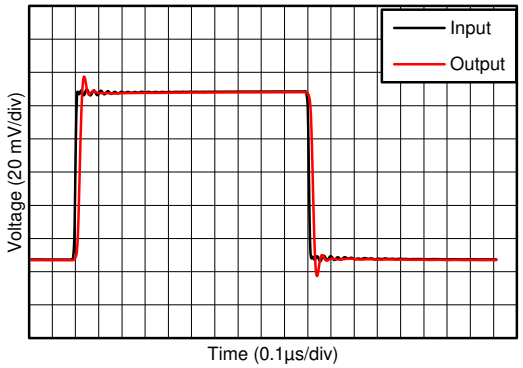

V+ = 2.75 V, V– = –2.75 V, G = 1 V/V

Figure 26. Small-Signal Step Response

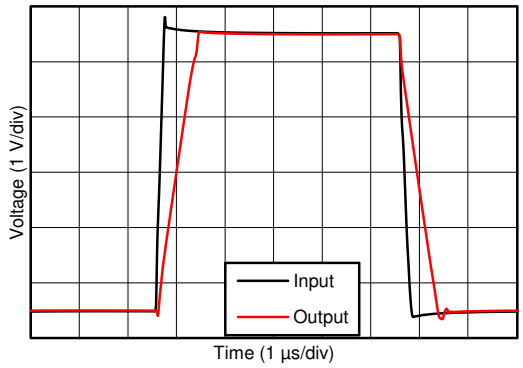

V+ = 2.75 V V– = –2.75 V C_L = 100 pF
G = 1 V/V

Figure 27. Large-Signal Step Response

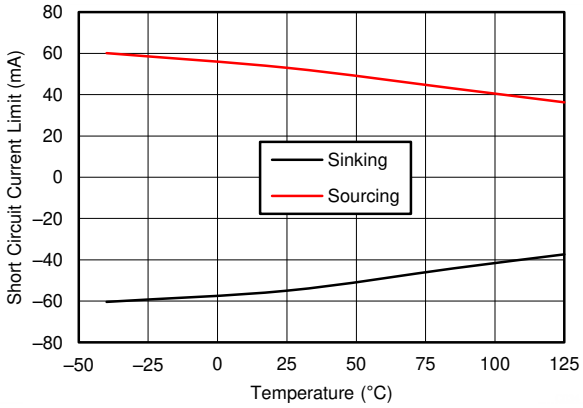

Figure 28. Short-Circuit Current vs Temperature

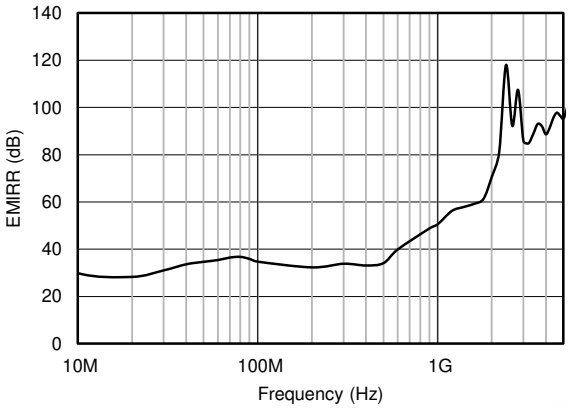

P_{RF} = –10 dBm

Figure 29. Electromagnetic Interference Rejection Ratio Referred to Noninverting Input (EMIRR+) vs Frequency

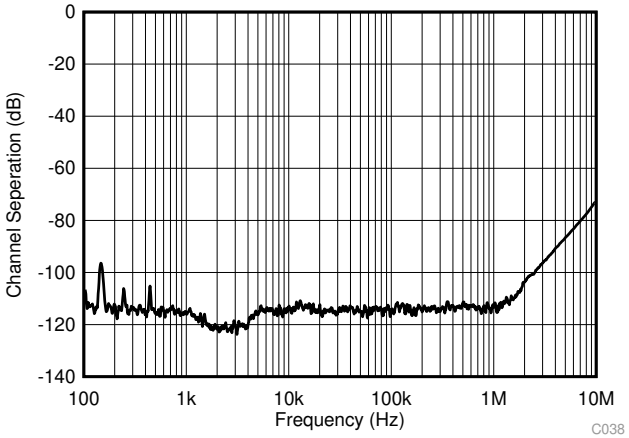

V+ = 2.75 V, V– = –2.75 V

Figure 30. Channel Separation vs Frequency

Copyright © 2017–2019, Texas Instruments Incorporated

Typical Characteristics (continued)

at T_A = 25°C, V_S = 5.5 V, R_L = 10 kΩ connected to V_S / 2, V_{CM} = V_S / 2, and V_{OUT} = V_S / 2 (unless otherwise noted)

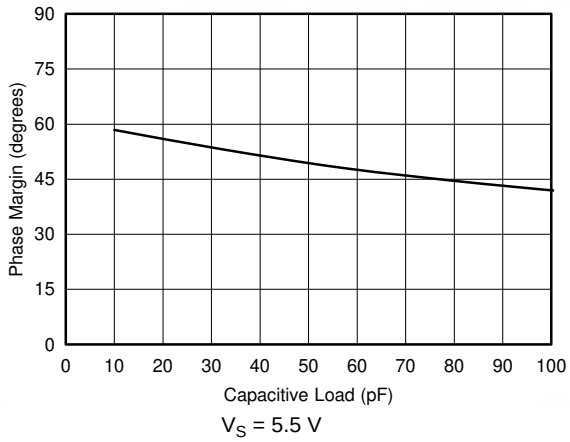

Figure 31. Phase Margin vs Capacitive Load

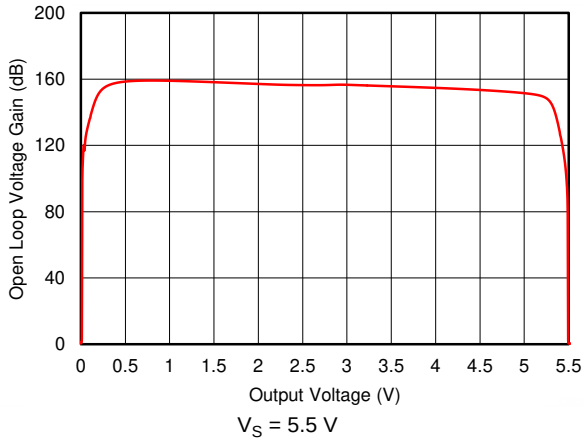

Figure 32. Open Loop Voltage Gain vs Output Voltage

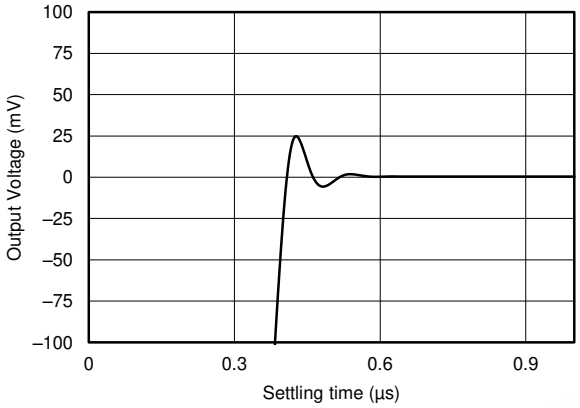

Figure 33. Large Signal Settling Time (Positive)

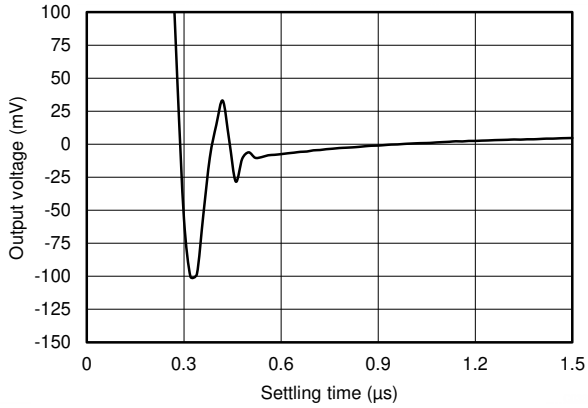

Figure 34. Large Signal Settling Time (Negative)

8 Detailed Description

8.1 Overview

The TSV91x series is a family of low-power, rail-to-rail input and output op amps. These devices operate from 2.5 V to 5.5 V, are unity-gain stable, and are designed for a wide range of general-purpose applications. The input common-mode voltage range includes both rails and allows the TSV91x series to be used in virtually any single-supply application. Rail-to-rail input and output swing significantly increases dynamic range, especially in low-supply applications and are designed for driving sampling analog-to-digital converters (ADCs).

8.2 Functional Block Diagram

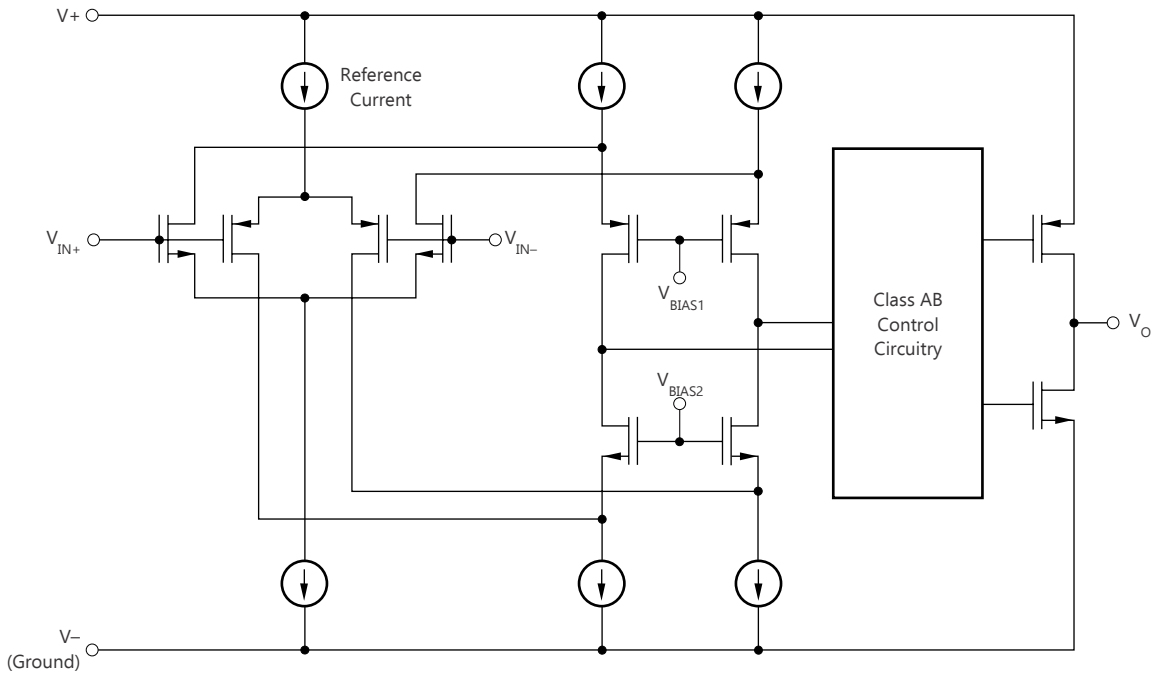

Copyright © 2017–2019, Texas Instruments Incorporated

8.3 Feature Description

8.3.1 Rail-to-Rail Input

The input common-mode voltage range of the TSV91x family extends 100 mV beyond the supply rails for the full supply voltage range of 2.5 V to 5.5 V. This performance is achieved with a complementary input stage: an N-channel input differential pair in parallel with a P-channel differential pair, as shown in the *Functional Block Diagram*. The N-channel pair is active for input voltages close to the positive rail, typically (V+) – 1.4 V to 100 mV above the positive supply, whereas the P-channel pair is active for inputs from 100 mV below the negative supply to approximately (V+) – 1.4 V. There is a small transition region, typically (V+) – 1.2 V to (V+) – 1 V, in which both pairs are on. This 200-mV transition region can vary up to 200 mV with process variation. Thus, the transition region (with both stages on) can range from (V+) – 1.4 V to (V+) – 1.2 V on the low end, and up to (V+) – 1 V to (V+) – 0.8 V on the high end. Within this transition region, PSRR, CMRR, offset voltage, offset drift, and THD can degrade compared to device operation outside this region.

8.3.2 Rail-to-Rail Output

Designed as a low-power, low-voltage operational amplifier, the TSV91x series delivers a robust output drive capability. A class AB output stage with common-source transistors achieves full rail-to-rail output swing capability. For resistive loads of 10 kΩ, the output swings to within 15 mV of either supply rail, regardless of the applied power-supply voltage. Different load conditions change the ability of the amplifier to swing close to the rails.

8.3.3 Packages with an Exposed Thermal Pad

The TSV91x family is available in packages such as the WSON-8 (DSG) which feature an exposed thermal pad. Inside the package, the die is attached to this thermal pad using an electrically conductive compound. For this reason, when using a package with an exposed thermal pad, the thermal pad must either be connected to V– or left floating. Attaching the thermal pad to a potential other then V– is not allowed, and the performance of the device is not assured when doing so.

8.3.4 Overload Recovery

Overload recovery is defined as the time required for the operational amplifier output to recover from a saturated state to a linear state. The output devices of the operational amplifier enter a saturation region when the output voltage exceeds the rated operating voltage, because of the high input voltage or the high gain. After the device enters the saturation region, the charge carriers in the output devices require time to return to the linear state. After the charge carriers return to the linear state, the device begins to slew at the specified slew rate. Therefore, the propagation delay (in case of an overload condition) is the sum of the overload recovery time and the slew time. The overload recovery time for the TSV91x series is approximately 200 ns.

8.4 Device Functional Modes

The TSV91x family has a single functional mode. These devices are powered on as long as the power-supply voltage is between 2.5 V (±1.25 V) and 5.5 V (±2.75 V).

9 Application and Implementation

NOTE

Information in the following applications sections is not part of the TI component specification, and TI does not warrant its accuracy or completeness. TI's customers are responsible for determining suitability of components for their purposes. Customers should validate and test their design implementation to confirm system functionality.

9.1 Application Information

The TSV91x series features 8-MHz bandwidth and 4.5-V/µs slew rate with only 550 µA of supply current per channel, providing good AC performance at low power consumption. DC applications are well served with a low input noise voltage of 18 nV / √Hz at 1 kHz, low input bias current, and a typical input offset voltage of 0.3 mV.

9.2 Typical Application

Figure 35 shows the TSV91x configured in a low-side, motor-control application.

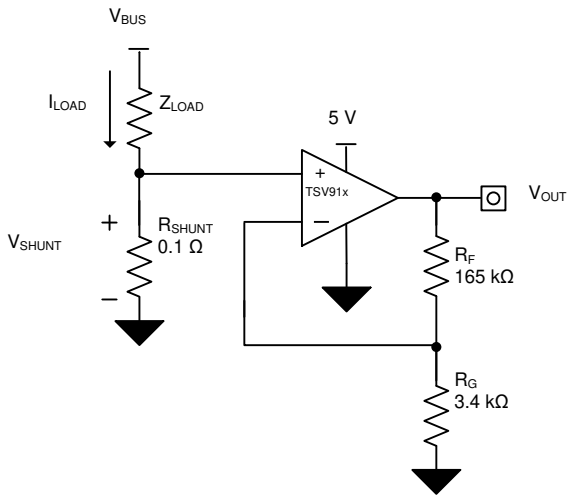

Figure 35. TSV91x in a Low-Side, Motor-Control Application

9.2.1 Design Requirements

The design requirements for this design are:

- Load current: 0 A to 1 A
- Output voltage: 4.95 V
- Maximum shunt voltage: 100 mV

Copyright © 2017–2019, Texas Instruments Incorporated

Typical Application (continued)

9.2.2 Detailed Design Procedure

The transfer function of the circuit in Figure 35 is shown in Equation 1.

$$V_{OUT} = I_{LOAD} \times R_{SHUNT} \times Gain \tag{1}$$

The load current (I_{LOAD}) produces a voltage drop across the shunt resistor (R_{SHUNT}). The load current is set from 0 A to 1 A. To keep the shunt voltage below 100 mV at maximum load current, the largest shunt resistor is defined using Equation 2.

$$R_{SHUNT} = \frac{V_{SHUNT_MAX}}{I_{LOAD_MAX}} = \frac{100mV}{1A} = 100m\Omega \tag{2}$$

Using Equation 2, R_{SHUNT} is 100 mΩ. The voltage drop produced by I_{LOAD} and R_{SHUNT} is amplified by the TSV91x to produce an output voltage of approximately 0 V to 4.95 V. The gain required by the TSV91x to produce the necessary output voltage is calculated using Equation 3:

$$Gain = \frac{\left(V_{OUT_MAX} - V_{OUT_MIN}\right)}{\left(V_{IN_MAX} - V_{IN_MIN}\right)} \tag{3}$$

Using Equation 3, the required gain is calculated to be 49.5 V/V, which is set with resistors R_F and R_G. Equation 4 is used to size the resistors, R_F and R_G, to set the gain of the TSV91x to 49.5 V/V.

$$Gain = 1 + \frac{\left(R_F\right)}{\left(R_G\right)} \tag{4}$$

Selecting R_F as 165 kΩ and R_G as 3.4 kΩ provides a combination that equals roughly 49.5 V/V. Figure 36 shows the measured transfer function of the circuit shown in Figure 35.

9.2.3 Application Curve

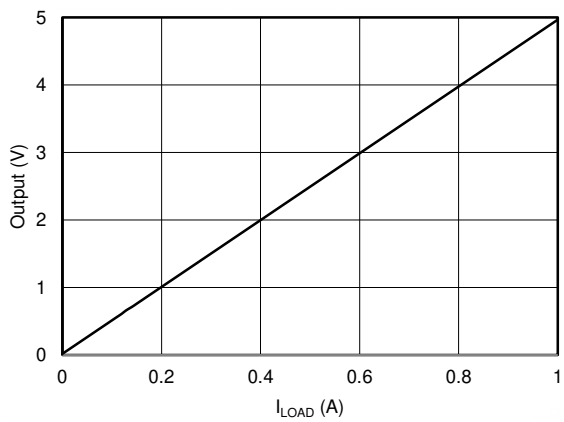

Figure 36. Low-Side, Current-Sense, Transfer Function

10 Power Supply Recommendations

The TSV91x series is specified for operation from 2.5 V to 5.5 V (±1.25 V to ±2.75 V); many specifications apply from –40°C to 125°C. The *Typical Characteristics* section presents parameters that can exhibit significant variance with regard to operating voltage or temperature.

CAUTION

Supply voltages larger than 6 V can permanently damage the device; see the *Absolute Maximum Ratings* table.

Place 0.1-µF bypass capacitors close to the power-supply pins to reduce errors coupling in from noisy or high-impedance power supplies. For more detailed information on bypass capacitor placement, see the *Layout Example* section.

10.1 Input and ESD Protection

The TSV91x series incorporates internal ESD protection circuits on all pins. For input and output pins, this protection consists of current-steering diodes connected between the input and power-supply pins. These ESD protection diodes provide in-circuit, input overdrive protection, as long as the current is limited to 10-mA, as stated in the *Absolute Maximum Ratings* table. Figure 37 shows how a series input resistor is added to the driven input to limit the input current. The added resistor contributes thermal noise at the amplifier input and the value must be kept to a minimum in noise-sensitive applications.

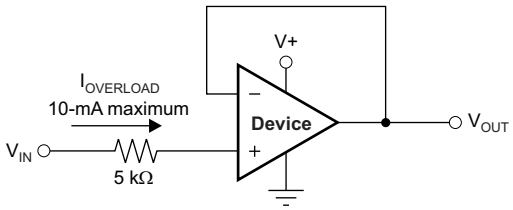

Figure 37. Input Current Protection

Copyright © 2017–2019, Texas Instruments Incorporated

11 Layout

11.1 Layout Guidelines

For best operational performance of the device, use good printed-circuit board (PCB) layout practices, including:

- Noise can propagate into analog circuitry through the power pins of the circuit as a whole and of op amp itself. Bypass capacitors are used to reduce the coupled noise by providing low-impedance power sources local to the analog circuitry.
  - Connect low-ESR, 0.1-µF ceramic bypass capacitors between each supply pin and ground, placed as close to the device as possible. A single bypass capacitor from V+ to ground is applicable for single-supply applications.
- Separate grounding for analog and digital portions of circuitry is one of the simplest and most-effective methods of noise suppression. One or more layers on multilayer PCBs are usually devoted to ground planes. A ground plane helps distribute heat and reduces electromagnetic interference (EMI) noise pickup. Make sure to physically separate digital and analog grounds, paying attention to the flow of the ground current. For more detailed information, see *Circuit Board Layout Techniques*.
- To reduce parasitic coupling, run the input traces as far away from the supply or output traces as possible. If these traces cannot be kept separate, crossing the sensitive trace perpendicular is much better as opposed to in parallel with the noisy trace.
- Place the external components as close to the device as possible. As shown in Figure 39, keeping RF and RG close to the inverting input minimizes parasitic capacitance on the inverting input.
- Keep the length of input traces as short as possible. Always remember that the input traces are the most sensitive part of the circuit.
- Consider a driven, low-impedance guard ring around the critical traces. A guard ring can significantly reduce leakage currents from nearby traces that are at different potentials.
- Cleaning the PCB following board assembly is recommended for best performance.
- Any precision integrated circuit can experience performance shifts resulting from moisture ingress into the plastic package. Following any aqueous PCB cleaning process, baking the PCB assembly is recommended to remove moisture introduced into the device packaging during the cleaning process. A low-temperature, post-cleaning bake at 85°C for 30 minutes is sufficient for most circumstances.

11.2 Layout Example

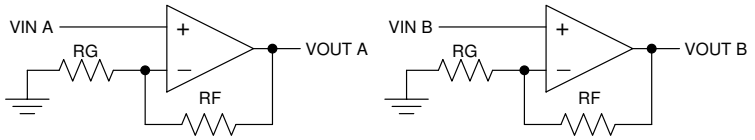

Figure 38. Schematic Representation for Figure 39

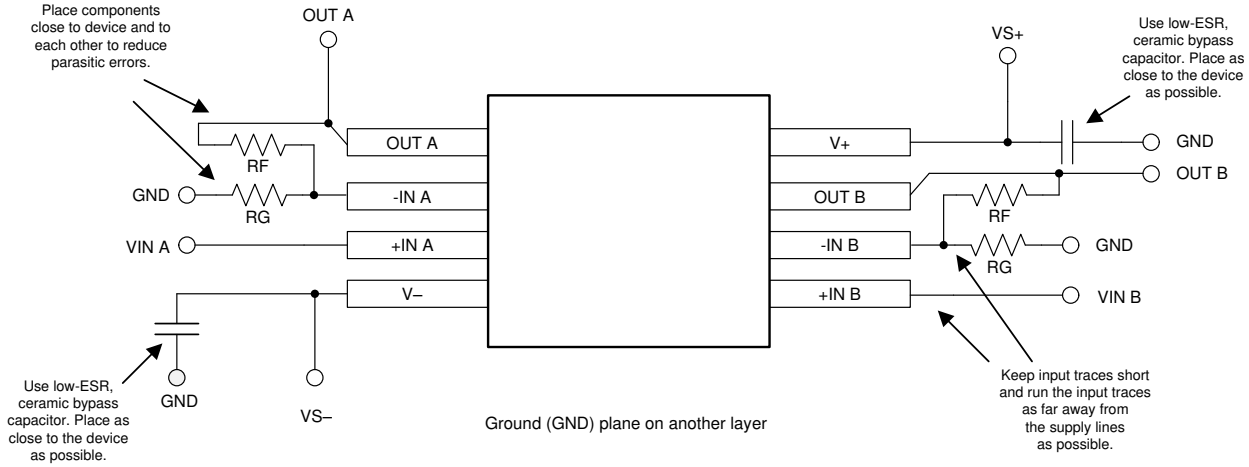

Figure 39. Layout Example

12 Device and Documentation Support

12.1 Documentation Support

12.1.1 Related Documentation

For related documentation see the following:

Texas Instruments, *Circuit Board Layout Techniques*, SLOA089

12.2 Related Links

The table below lists quick access links. Categories include technical documents, support and community resources, tools and software, and quick access to order now.

Table 1. Related Links

PARTS	PRODUCT FOLDER	ORDER NOW	TECHNICAL DOCUMENTS	TOOLS & SOFTWARE	SUPPORT & COMMUNITY
TSV911	Click here	Click here	Click here	Click here	Click here
TSV912	Click here	Click here	Click here	Click here	Click here
TSV914	Click here	Click here	Click here	Click here	Click here

12.3 Receiving Notification of Documentation Updates

To receive notification of documentation updates, navigate to the device product folder on ti.com. In the upper right corner, click on *Alert me* to register and receive a weekly digest of any product information that has changed. For change details, review the revision history included in any revised document.

12.4 Community Resources

TI E2E™ support forums are an engineer's go-to source for fast, verified answers and design help — straight from the experts. Search existing answers or ask your own question to get the quick design help you need.

Linked content is provided "AS IS" by the respective contributors. They do not constitute TI specifications and do not necessarily reflect TI's views; see TI's Terms of Use.

12.5 Trademarks

E2E is a trademark of Texas Instruments.
All other trademarks are the property of their respective owners.

12.6 Electrostatic Discharge Caution

This integrated circuit can be damaged by ESD. Texas Instruments recommends that all integrated circuits be handled with appropriate precautions. Failure to observe proper handling and installation procedures can cause damage.

ESD damage can range from subtle performance degradation to complete device failure. Precision integrated circuits may be more susceptible to damage because very small parametric changes could cause the device not to meet its published specifications.

12.7 Glossary

SLYZ022 — *TI Glossary*.

This glossary lists and explains terms, acronyms, and definitions.

13 Mechanical, Packaging, and Orderable Information

The following pages include mechanical, packaging, and orderable information. This information is the most current data available for the designated devices. This data is subject to change without notice and revision of this document. For browser-based versions of this data sheet, refer to the left-hand navigation.

Copyright © 2017–2019, Texas Instruments Incorporated

PACKAGING INFORMATION

Orderable Device	Status (1)	Package Type	Package Drawing	Pins	Package Qty	Eco Plan (2)	Lead/Ball Finish (6)	MSL Peak Temp (3)	Op Temp (°C)	Device Marking (4/5)	Samples
TSV911AIDBVR	ACTIVE	SOT-23	DBV	5	3000	Green (RoHS & no Sb/Br)	CU NIPDAU	Level-1-260C-UNLIM	-40 to 125	1U2F	Samples
TSV911AIDCKR	ACTIVE	SC70	DCK	5	3000	Green (RoHS & no Sb/Br)	CU SN	Level-2-260C-1 YEAR	-40 to 125	1EK	Samples
TSV912AIDDFR	ACTIVE	SOT-23-THIN	DDF	8	3000	Green (RoHS & no Sb/Br)	CU NIPDAU	Level-1-260C-UNLIM	-40 to 125	T12A	Samples
TSV912AIDGKR	ACTIVE	VSSOP	DGK	8	2500	Green (RoHS & no Sb/Br)	CU NIPDAUAG	Level-2-260C-1 YEAR	-40 to 125	T912	Samples
TSV912AIDGKT	ACTIVE	VSSOP	DGK	8	250	Green (RoHS & no Sb/Br)	CU NIPDAUAG	Level-2-260C-1 YEAR	-40 to 125	T912	Samples
TSV912AIDR	ACTIVE	SOIC	D	8	2500	Green (RoHS & no Sb/Br)	CU SN	Level-2-260C-1 YEAR	-40 to 125	TSV912	Samples
TSV912AIDSGR	ACTIVE	WSON	DSG	8	3000	Green (RoHS & no Sb/Br)	CU NIPDAU	Level-2-260C-1 YEAR	-40 to 125	T912	Samples
TSV912AIDSGT	ACTIVE	WSON	DSG	8	250	Green (RoHS & no Sb/Br)	CU NIPDAU	Level-2-260C-1 YEAR	-40 to 125	T912	Samples
TSV912AIPWR	ACTIVE	TSSOP	PW	8	2000	Green (RoHS & no Sb/Br)	CU SN	Level-2-260C-1 YEAR	-40 to 125	TSV912	Samples
TSV914AIDR	ACTIVE	SOIC	D	14	2500	Green (RoHS & no Sb/Br)	CU NIPDAU	Level-2-260C-1 YEAR	-40 to 125	TSV914AD	Samples
TSV914AIPWR	ACTIVE	TSSOP	PW	14	2000	Green (RoHS & no Sb/Br)	CU SN	Level-2-260C-1 YEAR	-40 to 125	TSV914	Samples
TSV914AIPWT	ACTIVE	TSSOP	PW	14	250	Green (RoHS & no Sb/Br)	CU SN	Level-2-260C-1 YEAR	-40 to 125	TSV914	Samples

(1) The marketing status values are defined as follows:
ACTIVE: Product device recommended for new designs.
LIFEBUY: TI has announced that the device will be discontinued, and a lifetime-buy period is in effect.
NRND: Not recommended for new designs. Device is in production to support existing customers, but TI does not recommend using this part in a new design.
PREVIEW: Device has been announced but is not in production. Samples may or may not be available.
OBSOLETE: TI has discontinued the production of the device.

(2) **RoHS:** TI defines "RoHS" to mean semiconductor products that are compliant with the current EU RoHS requirements for all 10 RoHS substances, including the requirement that RoHS substance do not exceed 0.1% by weight in homogeneous materials. Where designed to be soldered at high temperatures, "RoHS" products are suitable for use in specified lead-free processes. TI may reference these types of products as "Pb-Free".
RoHS Exempt: TI defines "RoHS Exempt" to mean products that contain lead but are compliant with EU RoHS pursuant to a specific EU RoHS exemption.

Green: TI defines "Green" to mean the content of Chlorine (Cl) and Bromine (Br) based flame retardants meet JS709B low halogen requirements of <=1000ppm threshold. Antimony trioxide based flame retardants must also meet the <=1000ppm threshold requirement.

(3) MSL, Peak Temp. - The Moisture Sensitivity Level rating according to the JEDEC industry standard classifications, and peak solder temperature.

(4) There may be additional marking, which relates to the logo, the lot trace code information, or the environmental category on the device.

(5) Multiple Device Markings will be inside parentheses. Only one Device Marking contained in parentheses and separated by a "~" will appear on a device. If a line is indented then it is a continuation of the previous line and the two combined represent the entire Device Marking for that device.

(6) Lead/Ball Finish - Orderable Devices may have multiple material finish options. Finish options are separated by a vertical ruled line. Lead/Ball Finish values may wrap to two lines if the finish value exceeds the maximum column width.

Important Information and Disclaimer: The information provided on this page represents TI's knowledge and belief as of the date that it is provided. TI bases its knowledge and belief on information provided by third parties, and makes no representation or warranty as to the accuracy of such information. Efforts are underway to better integrate information from third parties. TI has taken and continues to take reasonable steps to provide representative and accurate information but may not have conducted destructive testing or chemical analysis on incoming materials and chemicals. TI and TI suppliers consider certain information to be proprietary, and thus CAS numbers and other limited information may not be available for release.

In no event shall TI's liability arising out of such information exceed the total purchase price of the TI part(s) at issue in this document sold by TI to Customer on an annual basis.

TAPE AND REEL INFORMATION

REEL DIMENSIONS

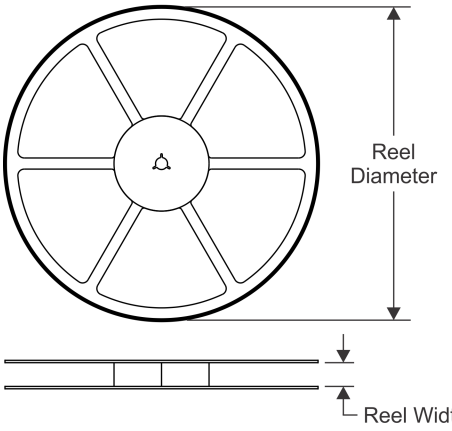

TAPE DIMENSIONS

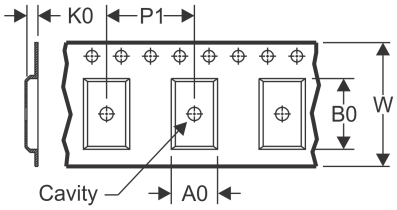

A0	Dimension designed to accommodate the component width
B0	Dimension designed to accommodate the component length
K0	Dimension designed to accommodate the component thickness
W	Overall width of the carrier tape
P1	Pitch between successive cavity centers

QUADRANT ASSIGNMENTS FOR PIN 1 ORIENTATION IN TAPE

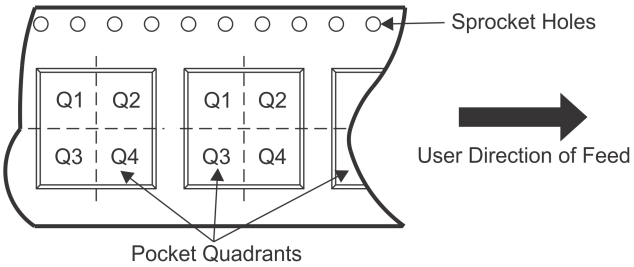

*All dimensions are nominal

Device	Package Type	Package Drawing	Pins	SPQ	Reel Diameter (mm)	Reel Width W1 (mm)	A0 (mm)	B0 (mm)	K0 (mm)	P1 (mm)	W (mm)	Pin1 Quadrant
TSV911AIDBVR	SOT-23	DBV	5	3000	180.0	8.4	3.2	3.2	1.4	4.0	8.0	Q3
TSV911AIDCKR	SC70	DCK	5	3000	178.0	9.0	2.4	2.5	1.2	4.0	8.0	Q3
TSV912AIDDFR	SOT-23-THIN	DDF	8	3000	180.0	8.4	3.2	3.2	1.4	4.0	8.0	Q3
TSV912AIDGKR	VSSOP	DGK	8	2500	330.0	12.4	5.3	3.4	1.4	8.0	12.0	Q1
TSV912AIDGKT	VSSOP	DGK	8	250	330.0	12.4	5.3	3.4	1.4	8.0	12.0	Q1
TSV912AIDR	SOIC	D	8	2500	330.0	15.4	6.4	5.2	2.1	8.0	12.0	Q1
TSV912AIDSGR	WSON	DSG	8	3000	180.0	8.4	2.3	2.3	1.15	4.0	8.0	Q2
TSV912AIDSGT	WSON	DSG	8	250	180.0	8.4	2.3	2.3	1.15	4.0	8.0	Q2
TSV912AIPWR	TSSOP	PW	8	2000	330.0	12.4	7.0	3.6	1.6	8.0	12.0	Q1
TSV914AIDR	SOIC	D	14	2500	330.0	15.4	6.4	5.2	2.1	8.0	12.0	Q1
TSV914AIPWR	TSSOP	PW	14	2000	330.0	12.4	6.9	5.6	1.6	8.0	12.0	Q1
TSV914AIPWT	TSSOP	PW	14	250	330.0	12.4	6.9	5.6	1.6	8.0	12.0	Q1

TAPE AND REEL BOX DIMENSIONS

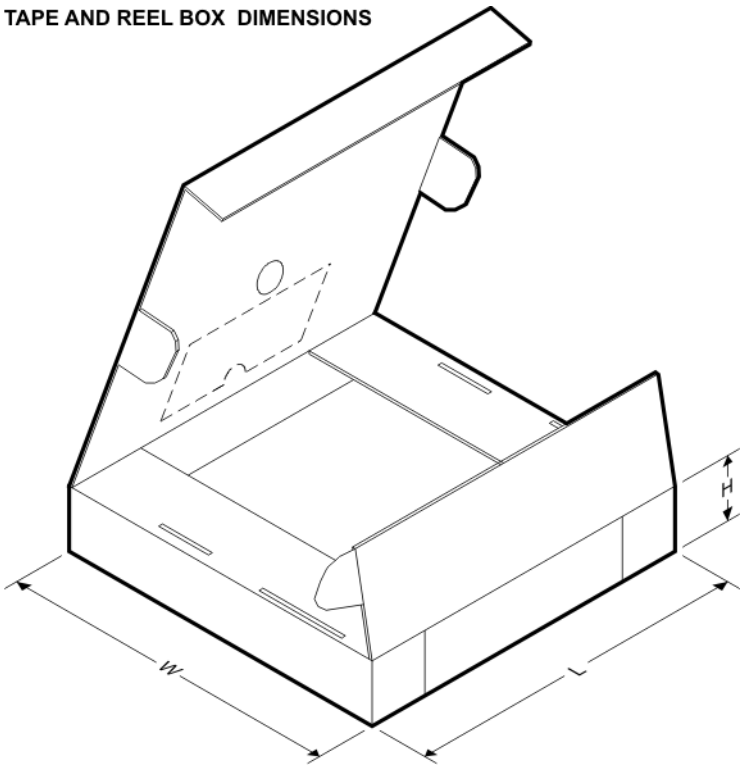

*All dimensions are nominal

Device	Package Type	Package Drawing	Pins	SPQ	Length (mm)	Width (mm)	Height (mm)
TSV911AIDBVR	SOT-23	DBV	5	3000	210.0	185.0	35.0
TSV911AIDCKR	SC70	DCK	5	3000	190.0	190.0	30.0
TSV912AIDDFR	SOT-23-THIN	DDF	8	3000	210.0	185.0	35.0
TSV912AIDGKR	VSSOP	DGK	8	2500	366.0	364.0	50.0
TSV912AIDGKT	VSSOP	DGK	8	250	366.0	364.0	50.0
TSV912AIDR	SOIC	D	8	2500	333.2	345.9	28.6
TSV912AIDSGR	WSON	DSG	8	3000	210.0	185.0	35.0
TSV912AIDSGT	WSON	DSG	8	250	210.0	185.0	35.0
TSV912AIPWR	TSSOP	PW	8	2000	366.0	364.0	50.0
TSV914AIDR	SOIC	D	14	2500	336.6	336.6	41.3
TSV914AIPWR	TSSOP	PW	14	2000	366.0	364.0	50.0
TSV914AIPWT	TSSOP	PW	14	250	366.0	364.0	50.0

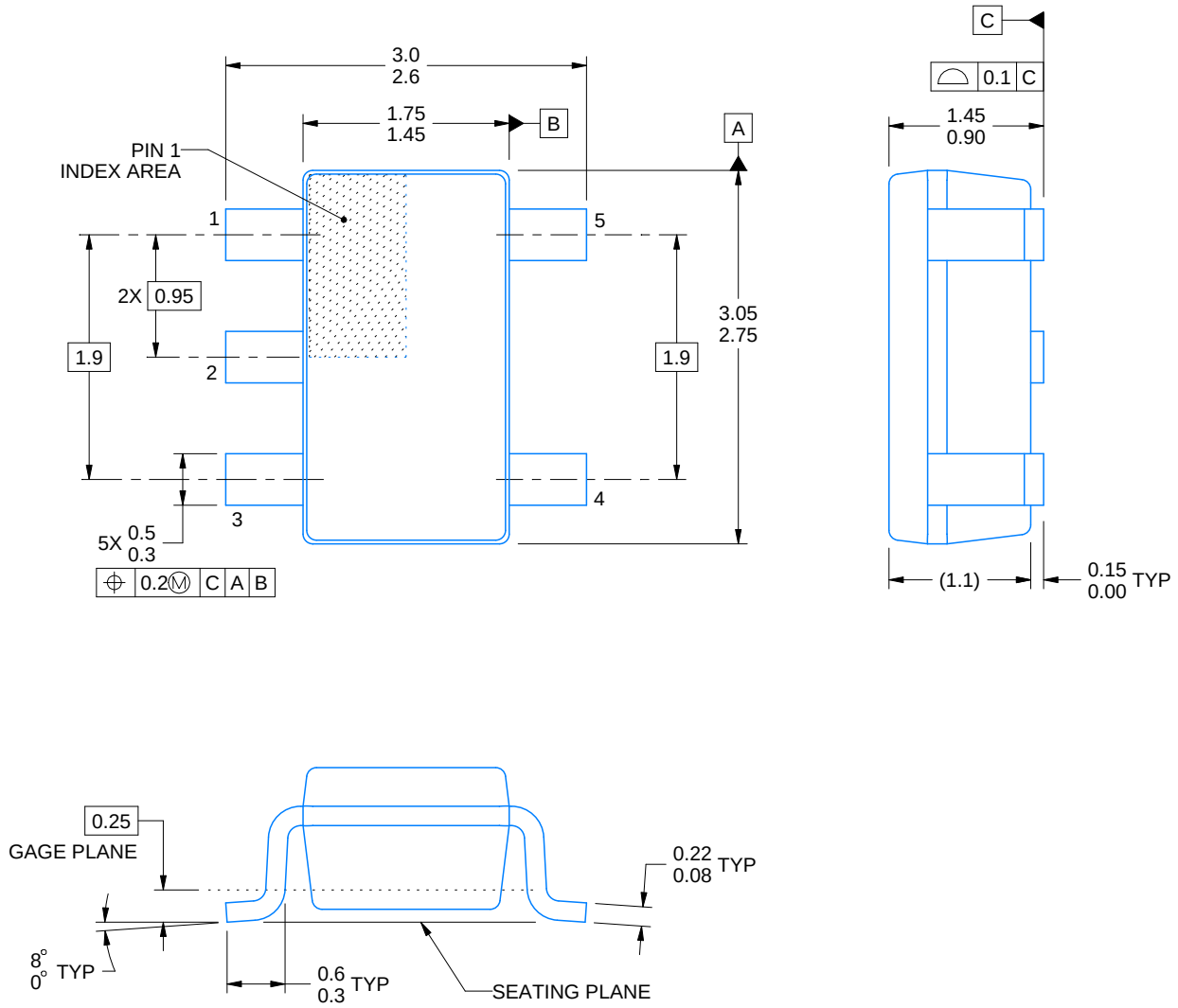

4214839/E 09/2019

NOTES:

1. All linear dimensions are in millimeters. Any dimensions in parenthesis are for reference only. Dimensioning and tolerancing per ASME Y14.5M.
2. This drawing is subject to change without notice.
3. Refernce JEDEC MO-178.
4. Body dimensions do not include mold flash, protrusions, or gate burrs. Mold flash, protrusions, or gate burrs shall not exceed 0.15 mm per side.

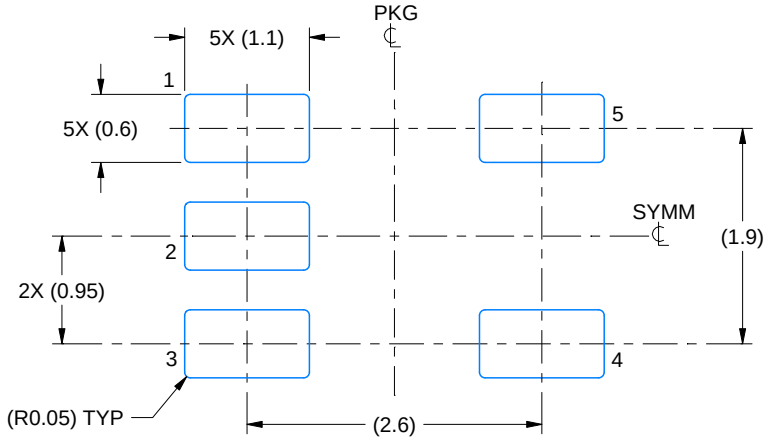

LAND PATTERN EXAMPLE
EXPOSED METAL SHOWN
SCALE:15X

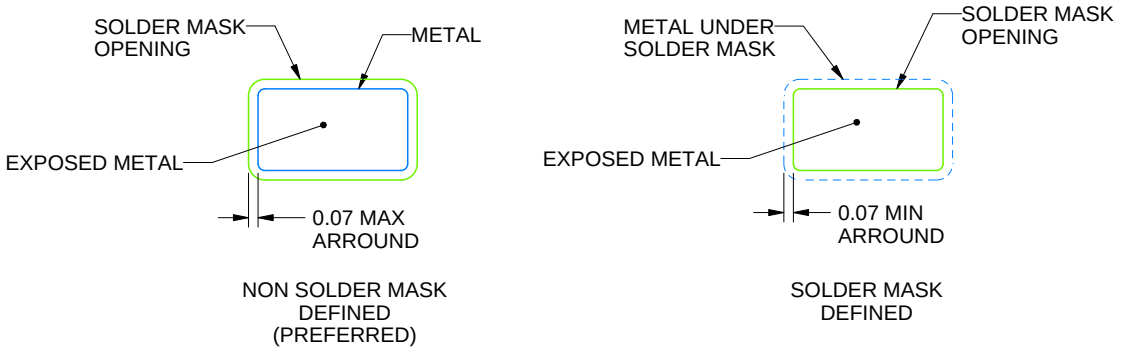

SOLDER MASK DETAILS

4214839/E 09/2019

NOTES: (continued)

5. Publication IPC-7351 may have alternate designs.
6. Solder mask tolerances between and around signal pads can vary based on board fabrication site.

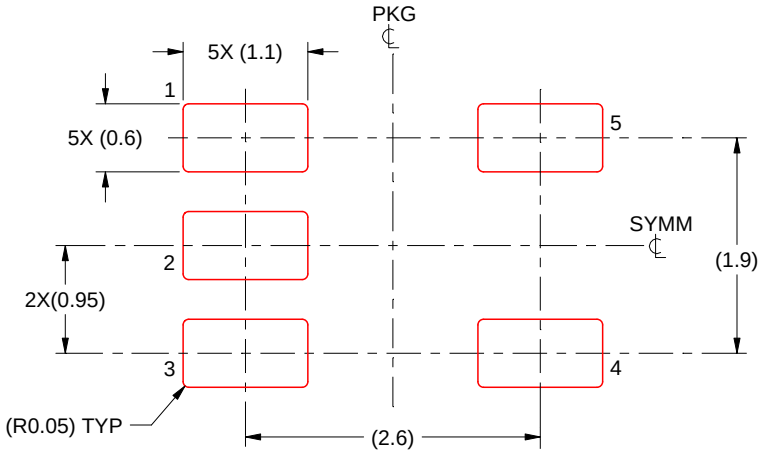

SOLDER PASTE EXAMPLE
BASED ON 0.125 mm THICK STENCIL
SCALE:15X

4214839/E 09/2019

NOTES: (continued)

7. Laser cutting apertures with trapezoidal walls and rounded corners may offer better paste release. IPC-7525 may have alternate design recommendations.
8. Board assembly site may have different recommendations for stencil design.

D (R–PDSO–G14) PLASTIC SMALL OUTLINE

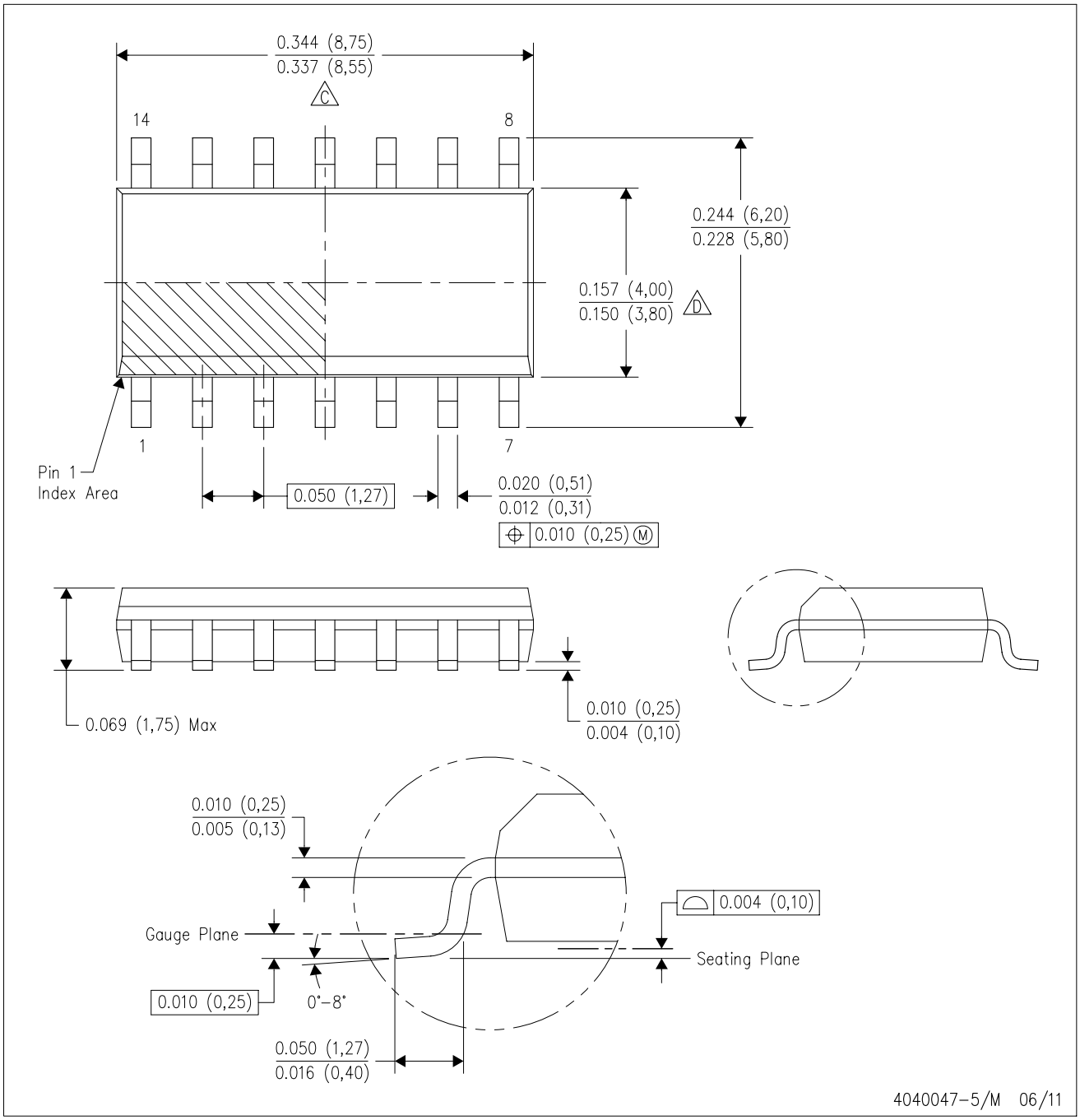

NOTES:
A. All linear dimensions are in inches (millimeters).
B. This drawing is subject to change without notice.
C. Body length does not include mold flash, protrusions, or gate burrs. Mold flash, protrusions, or gate burrs shall not exceed 0.006 (0,15) each side.
D. Body width does not include interlead flash. Interlead flash shall not exceed 0.017 (0,43) each side.
E. Reference JEDEC MS–012 variation AB.

PW (R–PDSO–G14) PLASTIC SMALL OUTLINE

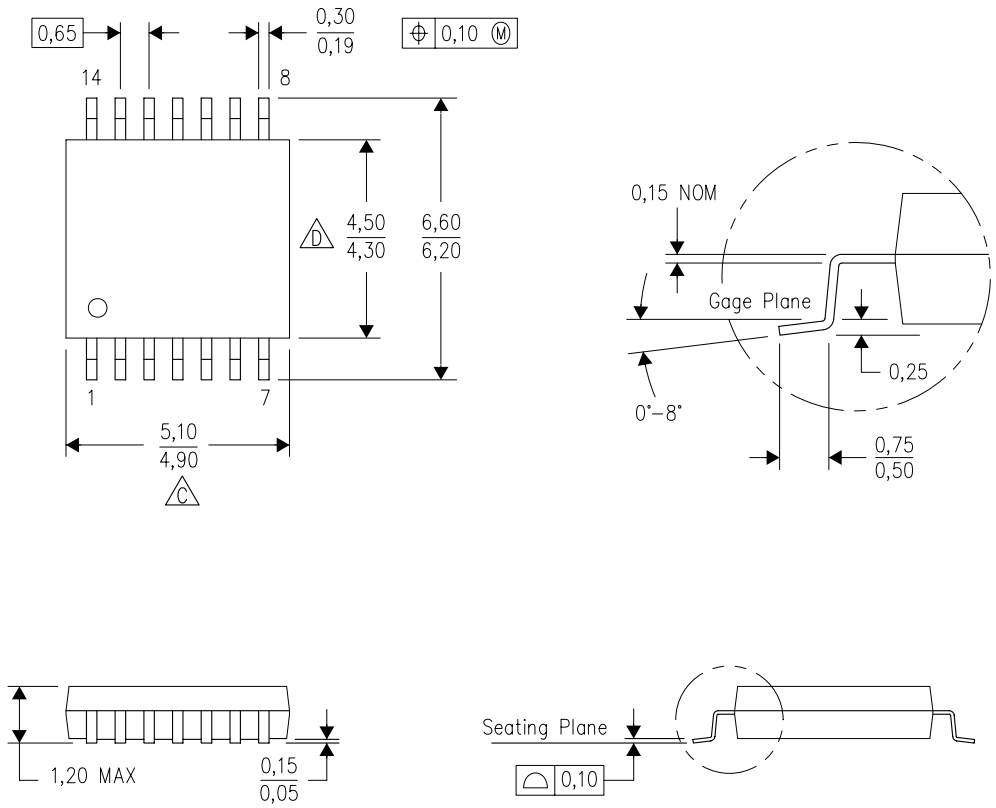

NOTES:
A. All linear dimensions are in millimeters. Dimensioning and tolerancing per ASME Y14.5M–1994.
B. This drawing is subject to change without notice.
C. Body length does not include mold flash, protrusions, or gate burrs. Mold flash, protrusions, or gate burrs shall not exceed 0,15 each side.
D. Body width does not include interlead flash. Interlead flash shall not exceed 0,25 each side.
E. Falls within JEDEC MO–153

PW (R–PDSO–G14) PLASTIC SMALL OUTLINE

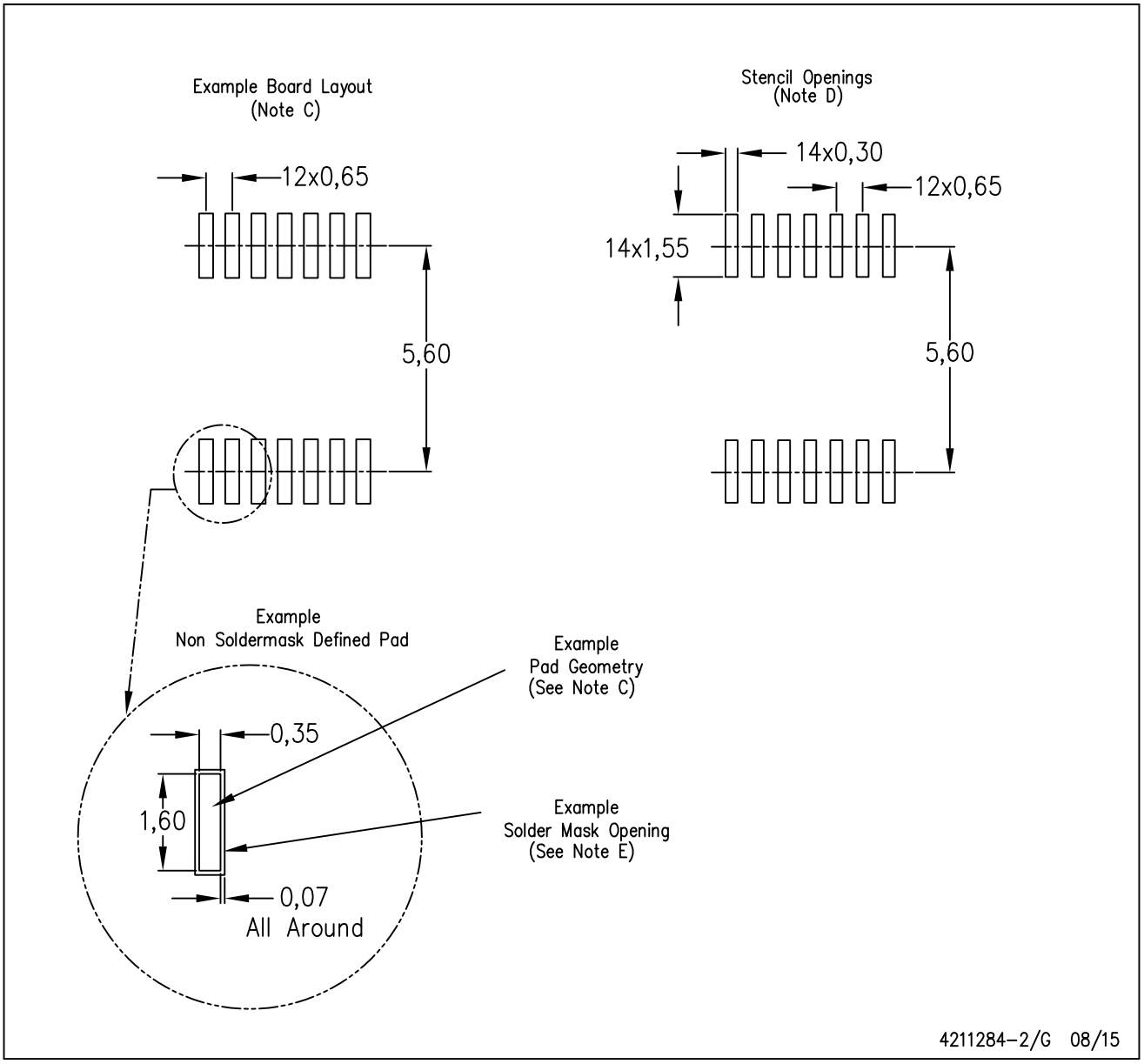

NOTES:
A. All linear dimensions are in millimeters.
B. This drawing is subject to change without notice.
C. Publication IPC–7351 is recommended for alternate designs.
D. Laser cutting apertures with trapezoidal walls and also rounding corners will offer better paste release. Customers should contact their board assembly site for stencil design recommendations. Refer to IPC–7525 for other stencil recommendations.
E. Customers should contact their board fabrication site for solder mask tolerances between and around signal pads.

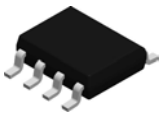

PACKAGE OUTLINE

D0008A

SOIC - 1.75 mm max height

SMALL OUTLINE INTEGRATED CIRCUIT

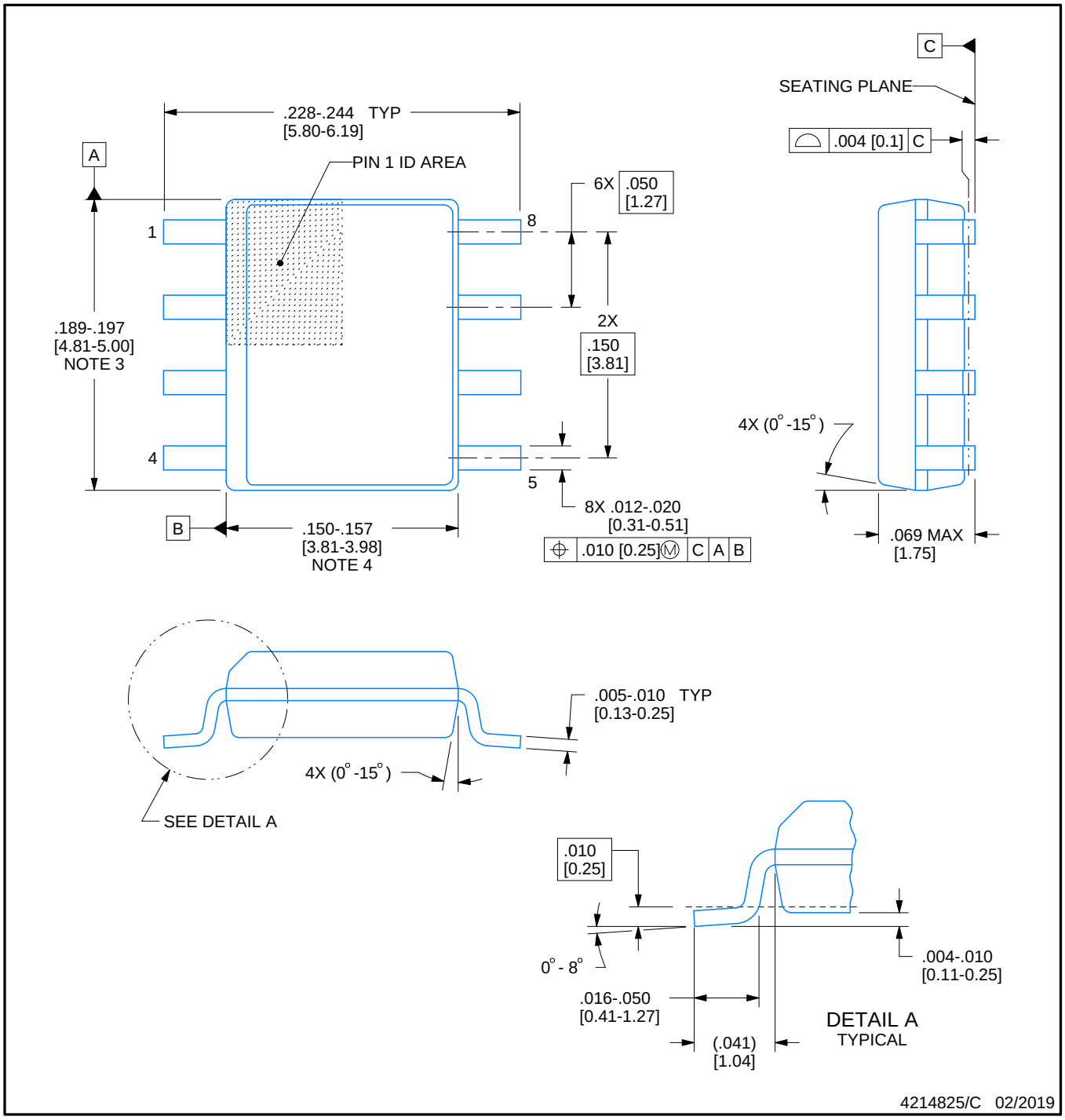

NOTES:

1. Linear dimensions are in inches [millimeters]. Dimensions in parenthesis are for reference only. Controlling dimensions are in inches. Dimensioning and tolerancing per ASME Y14.5M.
2. This drawing is subject to change without notice.
3. This dimension does not include mold flash, protrusions, or gate burrs. Mold flash, protrusions, or gate burrs shall not exceed .006 [0.15] per side.
4. This dimension does not include interlead flash.
5. Reference JEDEC registration MS-012, variation AA.

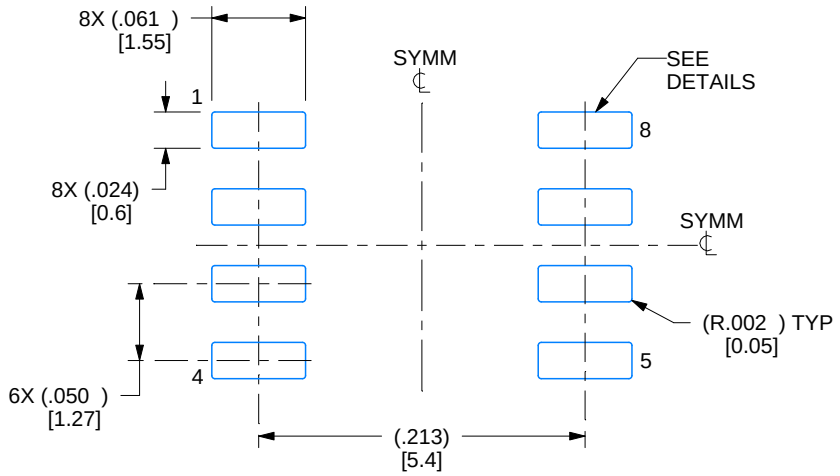

LAND PATTERN EXAMPLE
EXPOSED METAL SHOWN
SCALE:8X

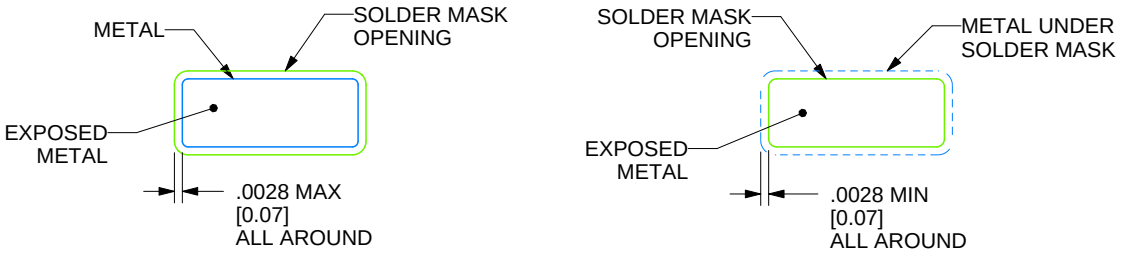

SOLDER MASK DETAILS

4214825/C 02/2019

NOTES: (continued)

6. Publication IPC-7351 may have alternate designs.
7. Solder mask tolerances between and around signal pads can vary based on board fabrication site.

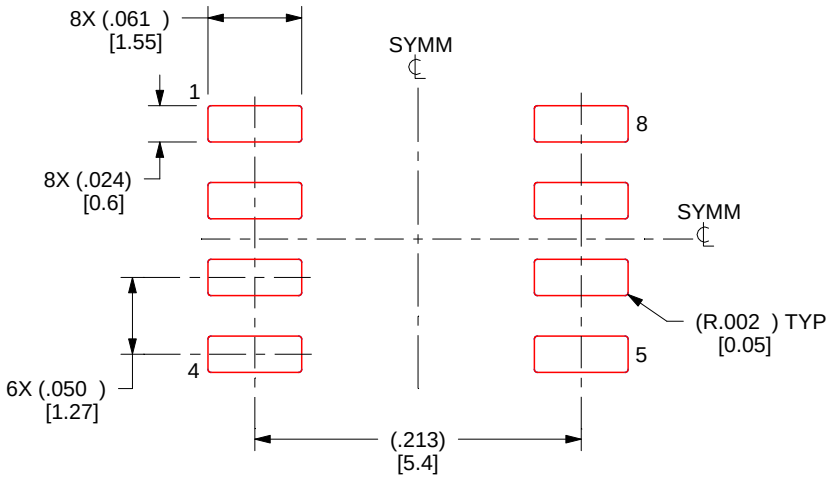

SOLDER PASTE EXAMPLE
BASED ON .005 INCH [0.125 MM] THICK STENCIL
SCALE:8X

4214825/C 02/2019

NOTES: (continued)

8. Laser cutting apertures with trapezoidal walls and rounded corners may offer better paste release. IPC-7525 may have alternate design recommendations.
9. Board assembly site may have different recommendations for stencil design.

DGK (S–PDSO–G8) PLASTIC SMALL–OUTLINE PACKAGE

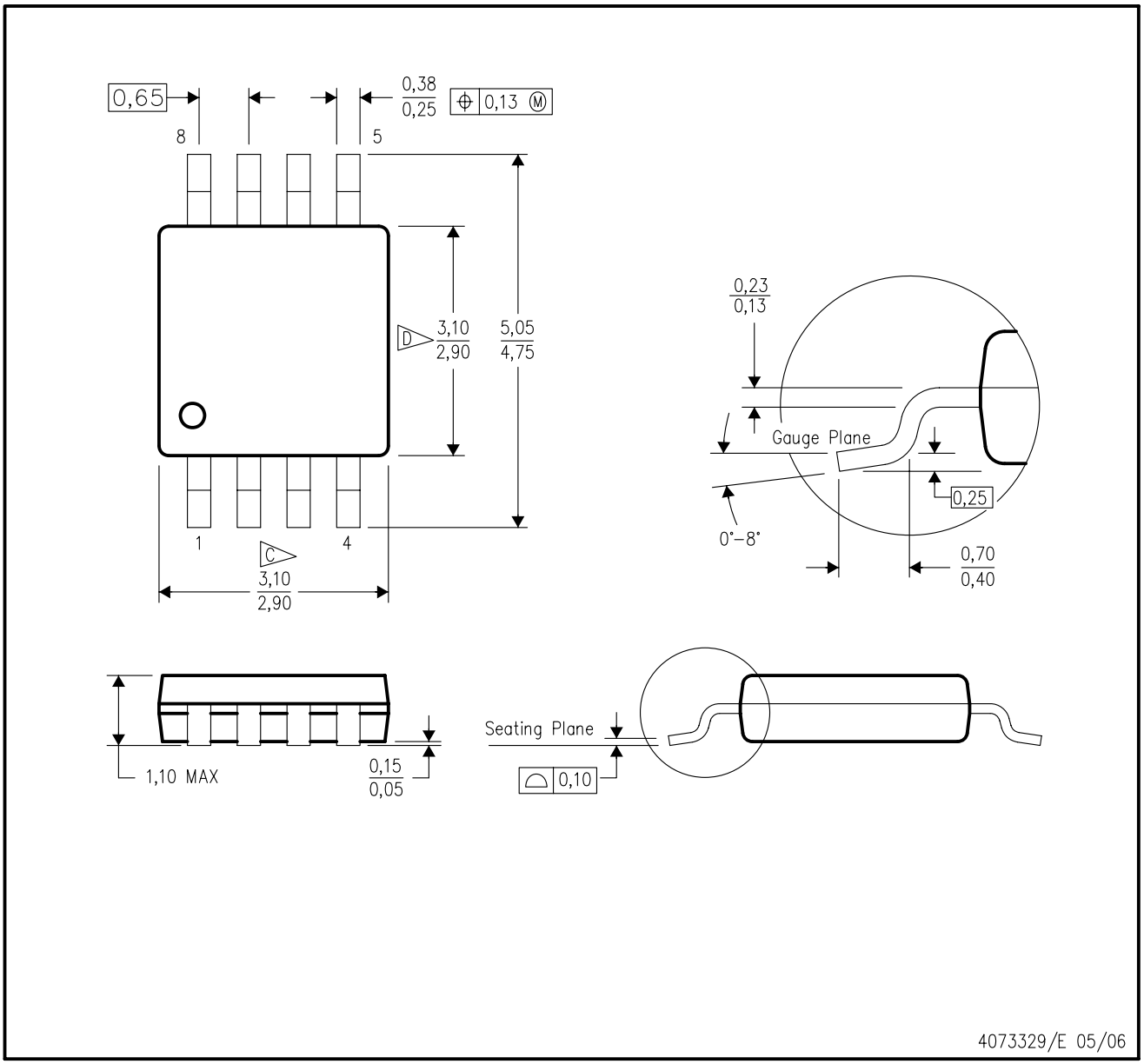

NOTES:
A. All linear dimensions are in millimeters.
B. This drawing is subject to change without notice.
C. Body length does not include mold flash, protrusions, or gate burrs. Mold flash, protrusions, or gate burrs shall not exceed 0.15 per end.
D. Body width does not include interlead flash. Interlead flash shall not exceed 0.50 per side.
E. Falls within JEDEC MO–187 variation AA, except interlead flash.

DGK (S–PDSO–G8) PLASTIC SMALL OUTLINE PACKAGE

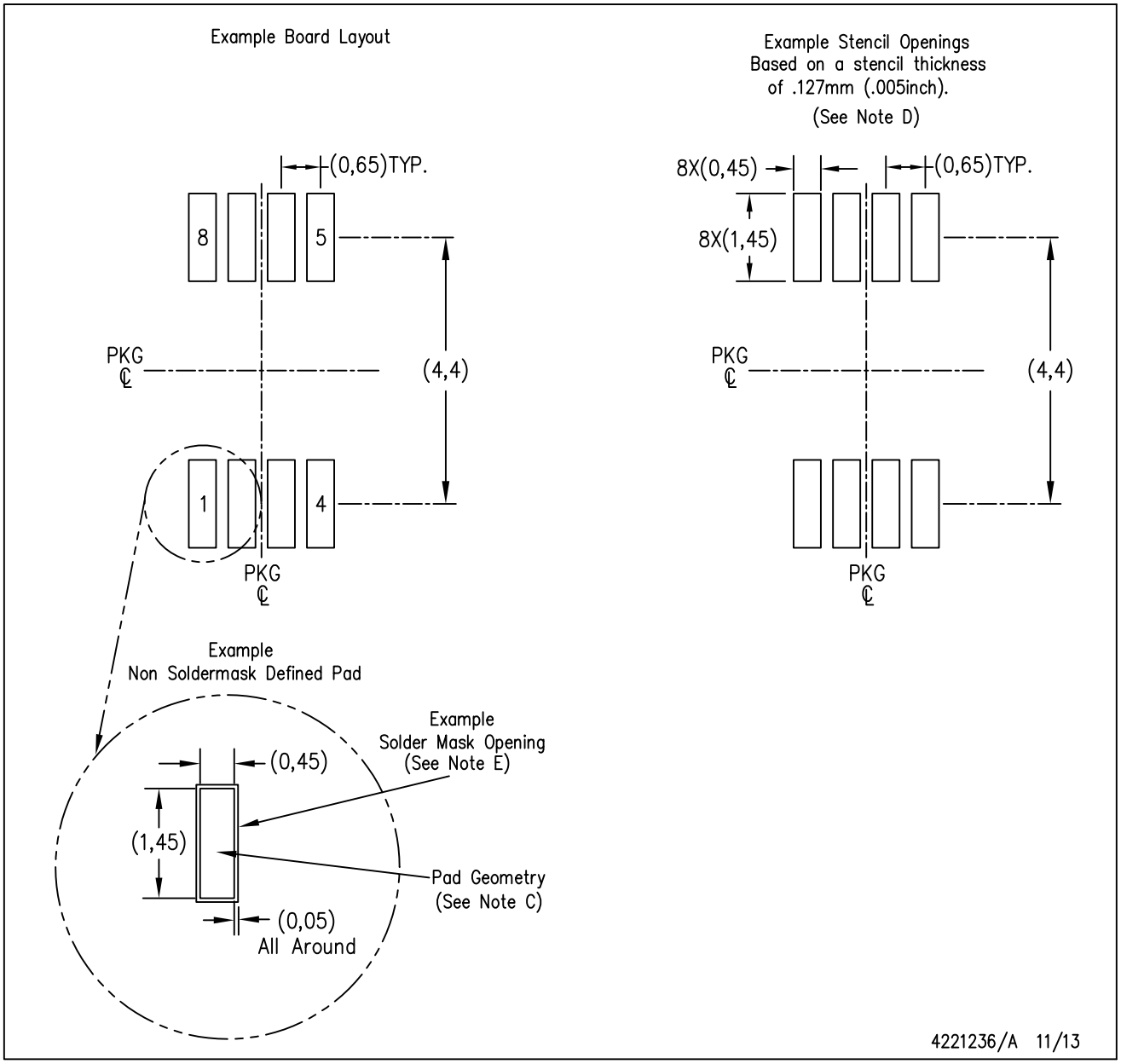

NOTES:
A. All linear dimensions are in millimeters.
B. This drawing is subject to change without notice.
C. Publication IPC–7351 is recommended for alternate designs.
D. Laser cutting apertures with trapezoidal walls and also rounding corners will offer better paste release. Customers should contact their board assembly site for stencil design recommendations. Refer to IPC–7525 for other stencil recommendations.
E. Customers should contact their board fabrication site for solder mask tolerances between and around signal pads.

GENERIC PACKAGE VIEW

DSG 8

WSON - 0.8 mm max height

2 x 2, 0.5 mm pitch

PLASTIC SMALL OUTLINE - NO LEAD

This image is a representation of the package family, actual package may vary.
Refer to the product data sheet for package details.

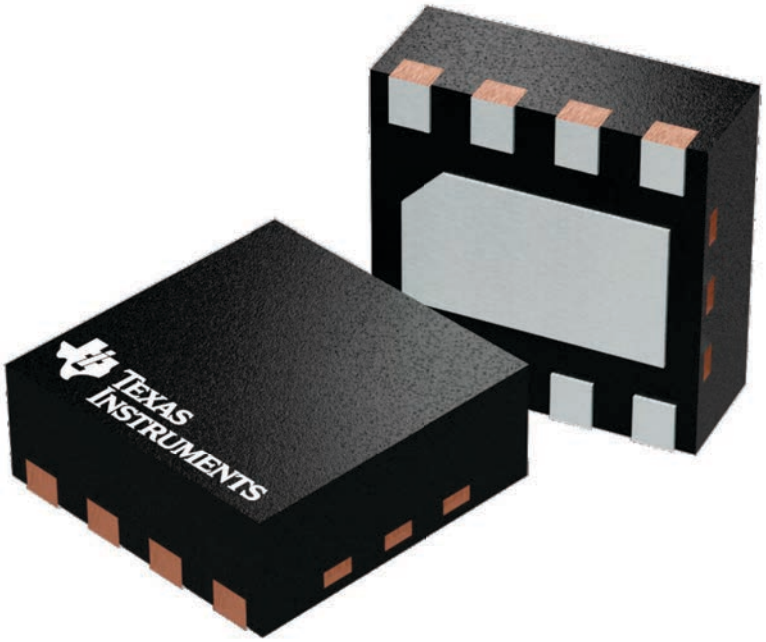

4224783/A

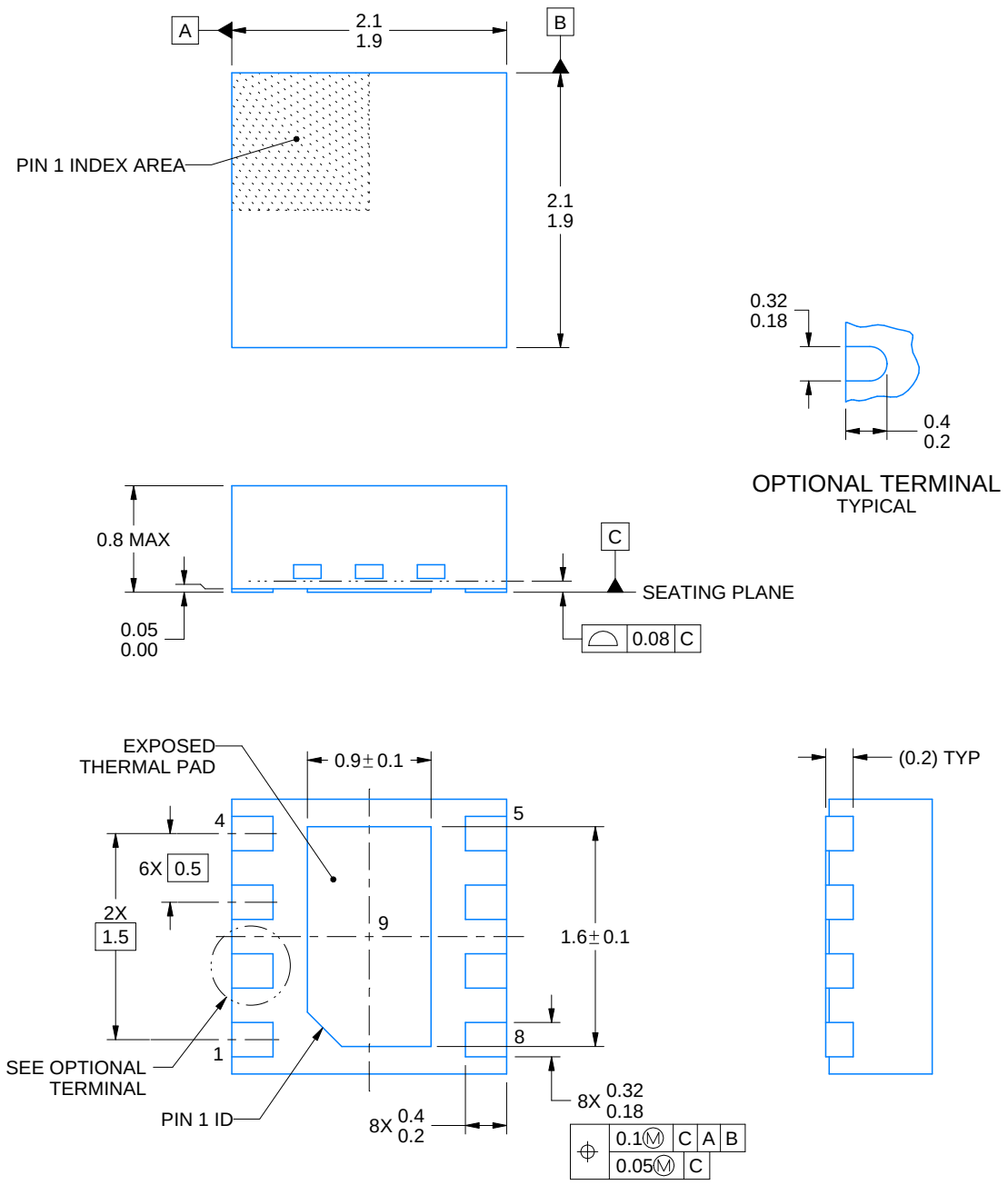

NOTES:

1. All linear dimensions are in millimeters. Any dimensions in parenthesis are for reference only. Dimensioning and tolerancing per ASME Y14.5M.
2. This drawing is subject to change without notice.
3. The package thermal pad must be soldered to the printed circuit board for thermal and mechanical performance.

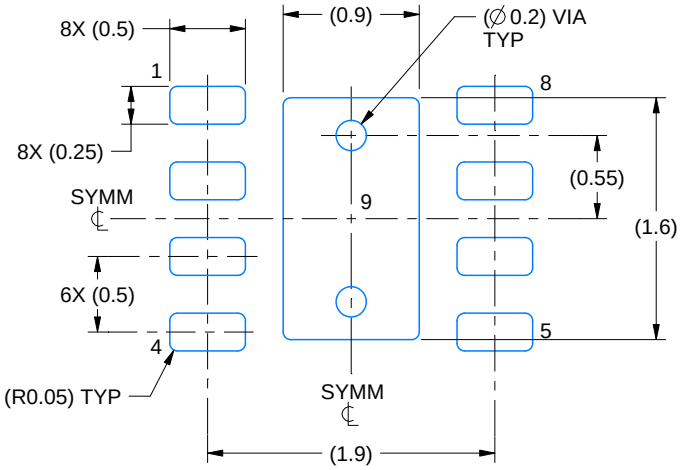

LAND PATTERN EXAMPLE
SCALE:20X

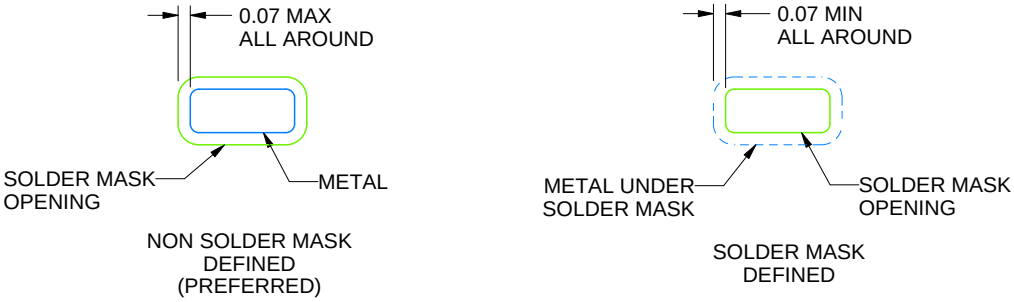

SOLDER MASK DETAILS

4218900/C 04/2019

NOTES: (continued)

4. This package is designed to be soldered to a thermal pad on the board. For more information, see Texas Instruments literature number SLUA271 (www.ti.com/lit/slua271).
5. Vias are optional depending on application, refer to device data sheet. If any vias are implemented, refer to their locations shown on this view. It is recommended that vias under paste be filled, plugged or tented.

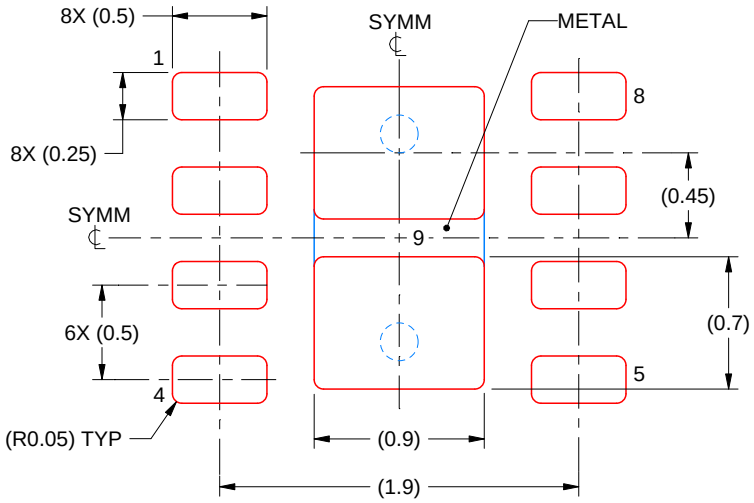

SOLDER PASTE EXAMPLE
BASED ON 0.125 mm THICK STENCIL

EXPOSED PAD 9:
87% PRINTED SOLDER COVERAGE BY AREA UNDER PACKAGE
SCALE:25X

4218900/C 04/2019

NOTES: (continued)

6. Laser cutting apertures with trapezoidal walls and rounded corners may offer better paste release. IPC-7525 may have alternate design recommendations.

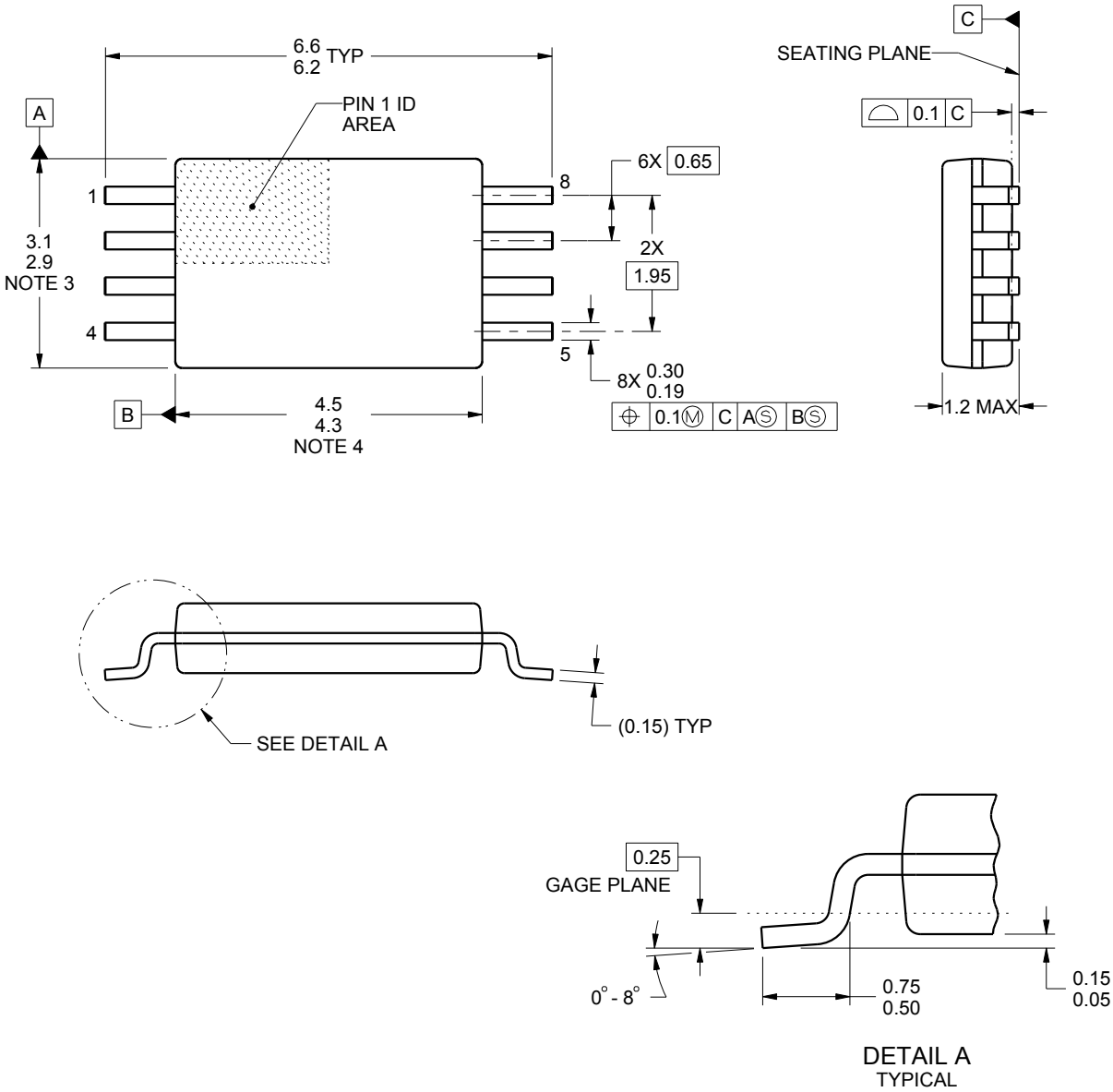

NOTES:

1. All linear dimensions are in millimeters. Any dimensions in parenthesis are for reference only. Dimensioning and tolerancing per ASME Y14.5M.
2. This drawing is subject to change without notice.
3. This dimension does not include mold flash, protrusions, or gate burrs. Mold flash, protrusions, or gate burrs shall not exceed 0.15 mm per side.
4. This dimension does not include interlead flash. Interlead flash shall not exceed 0.25 mm per side.
5. Reference JEDEC registration MO-153, variation AA.

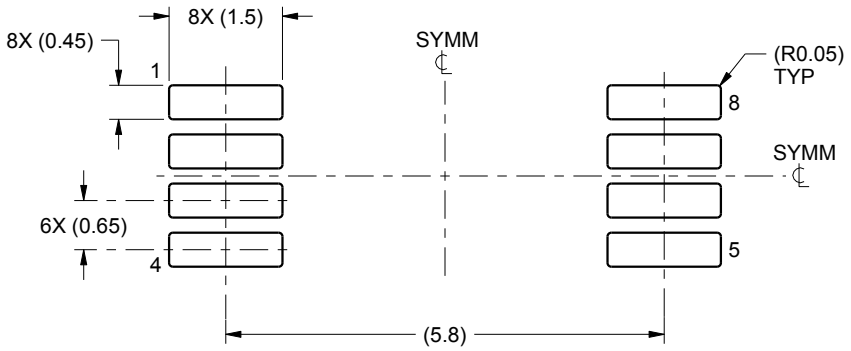

LAND PATTERN EXAMPLE
SCALE:10X

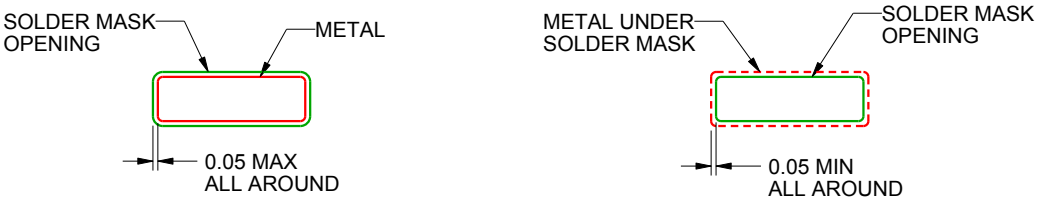

NON SOLDER MASK
DEFINED

SOLDER MASK
DEFINED

SOLDER MASK DETAILS
NOT TO SCALE

4221848/A 02/2015

NOTES: (continued)

6. Publication IPC-7351 may have alternate designs.
7. Solder mask tolerances between and around signal pads can vary based on board fabrication site.

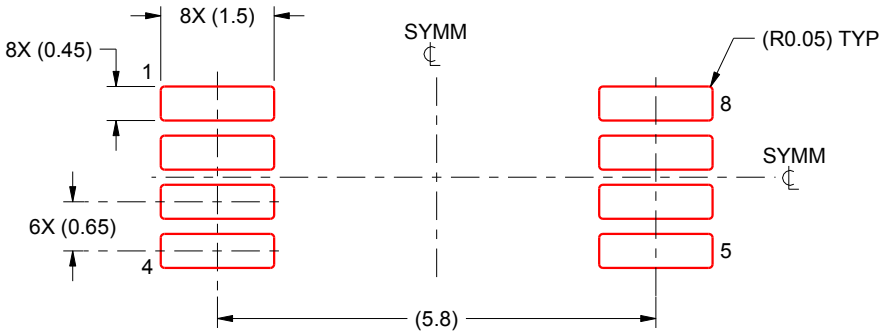

SOLDER PASTE EXAMPLE
BASED ON 0.125 mm THICK STENCIL
SCALE:10X

4221848/A 02/2015

NOTES: (continued)

8. Laser cutting apertures with trapezoidal walls and rounded corners may offer better paste release. IPC-7525 may have alternate design recommendations.
9. Board assembly site may have different recommendations for stencil design.

DCK (R–PDSO–G5) PLASTIC SMALL–OUTLINE PACKAGE

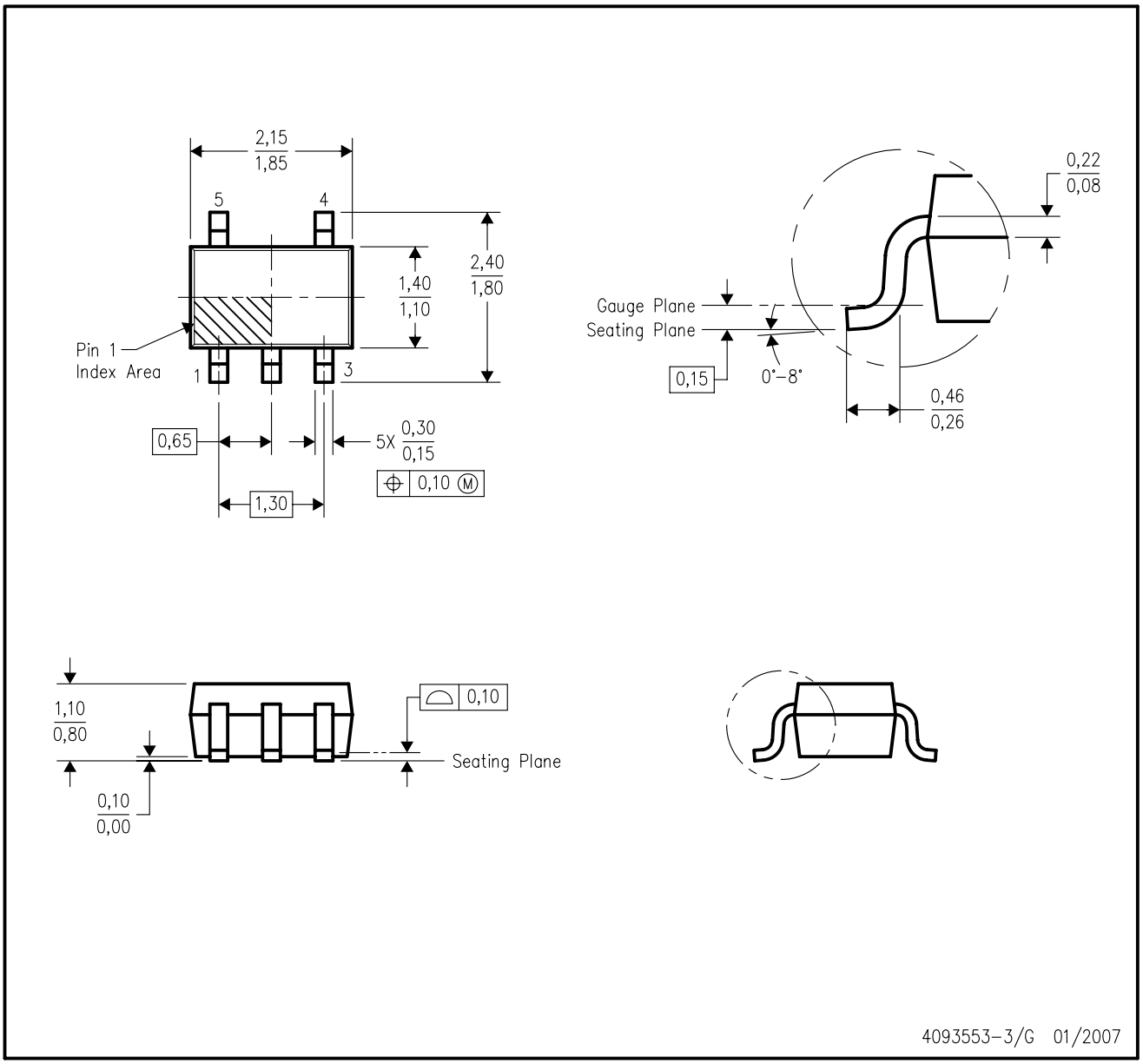

NOTES:
A. All linear dimensions are in millimeters.
B. This drawing is subject to change without notice.
C. Body dimensions do not include mold flash or protrusion. Mold flash and protrusion shall not exceed 0.15 per side.
D. Falls within JEDEC MO–203 variation AA.

DCK (R-PDSO-G5) PLASTIC SMALL OUTLINE

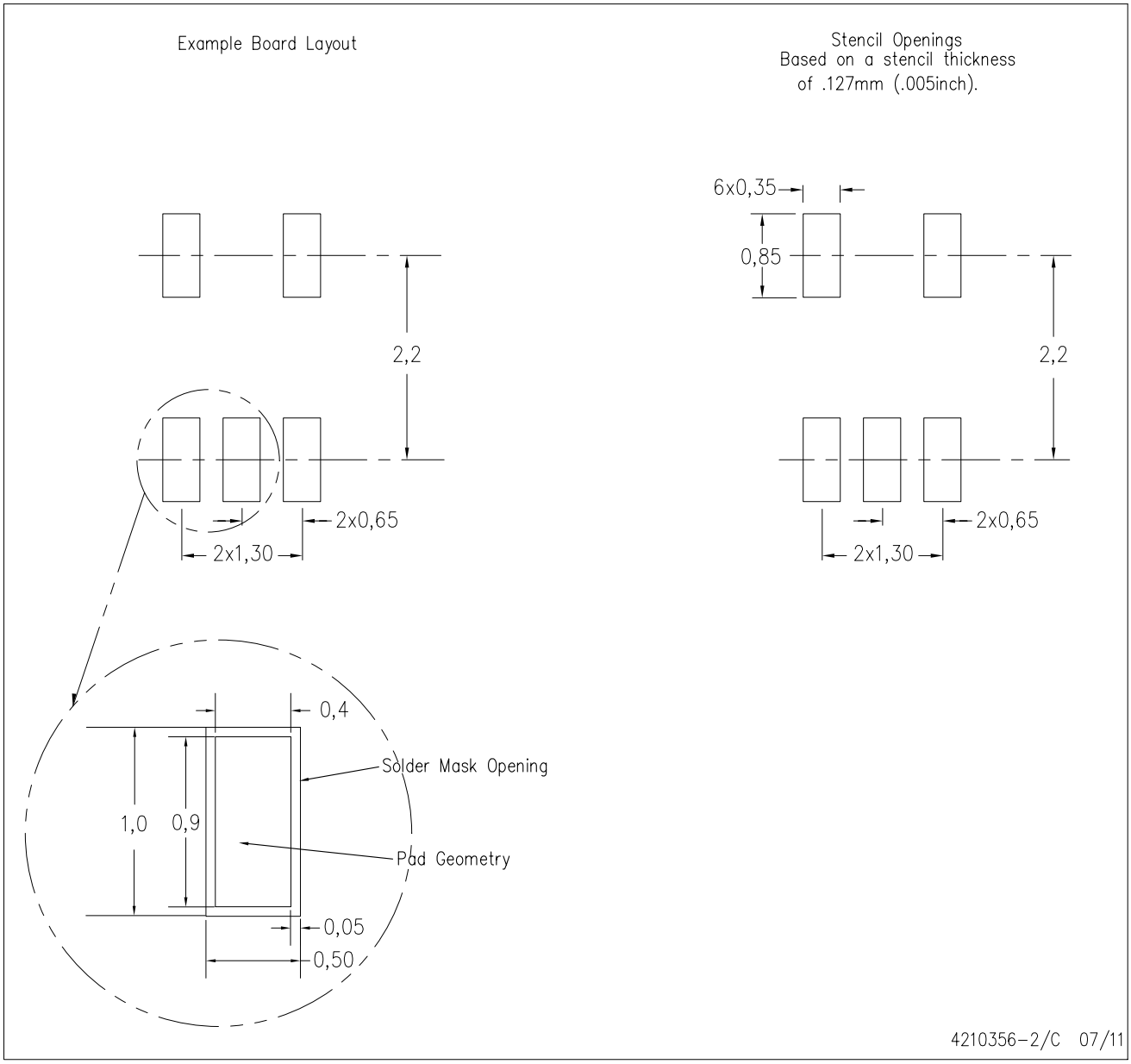

NOTES:
A. All linear dimensions are in millimeters.
B. This drawing is subject to change without notice.
C. Customers should place a note on the circuit board fabrication drawing not to alter the center solder mask defined pad.
D. Publication IPC-7351 is recommended for alternate designs.
E. Laser cutting apertures with trapezoidal walls and also rounding corners will offer better paste release. Customers should contact their board assembly site for stencil design recommendations. Example stencil design based on a 50% volumetric metal load solder paste. Refer to IPC-7525 for other stencil recommendations.

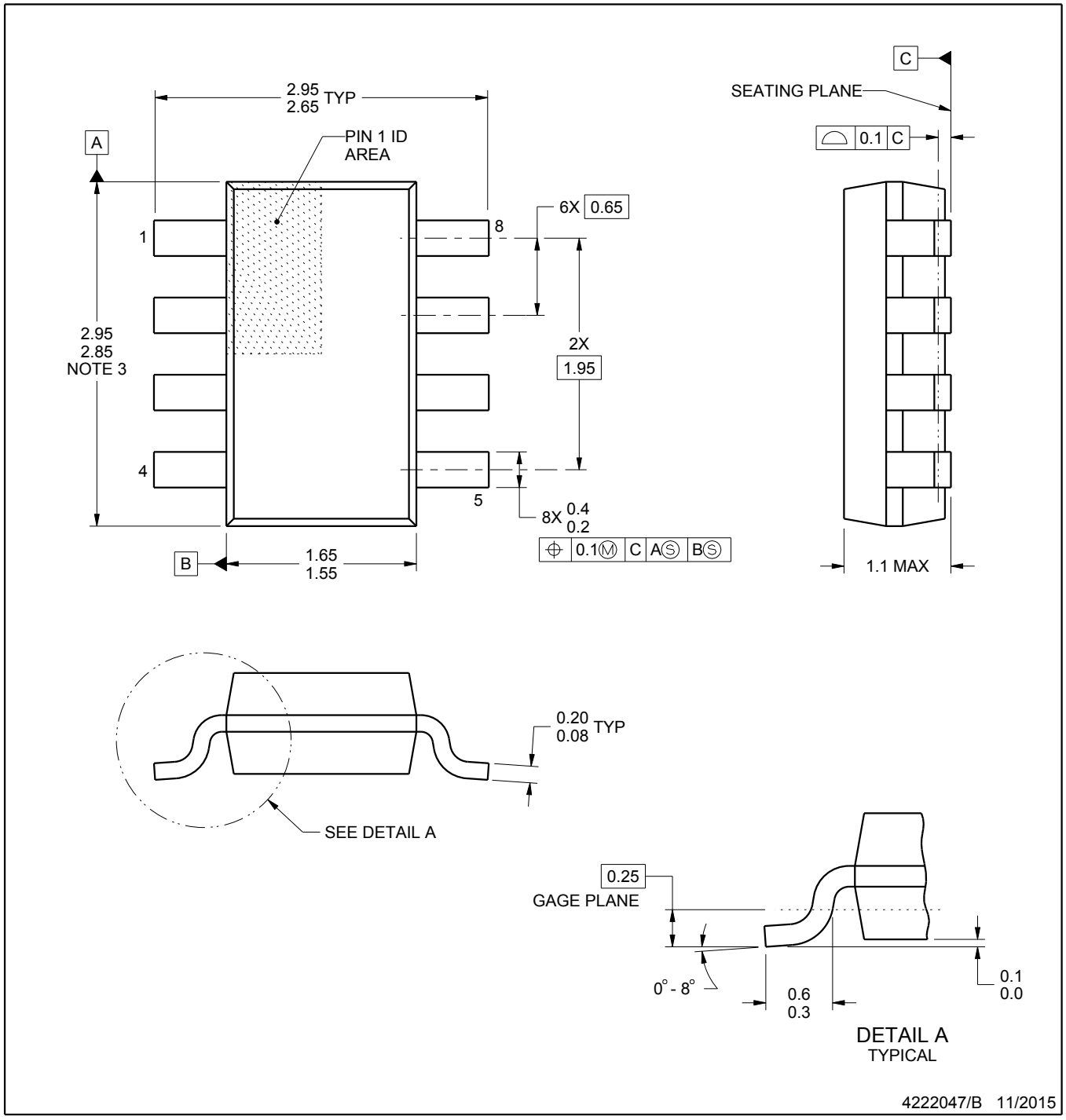

NOTES:

1. All linear dimensions are in millimeters. Any dimensions in parenthesis are for reference only. Dimensioning and tolerancing per ASME Y14.5M.
2. This drawing is subject to change without notice.
3. This dimension does not include mold flash, protrusions, or gate burrs. Mold flash, protrusions, or gate burrs shall not exceed 0.15 mm per side.

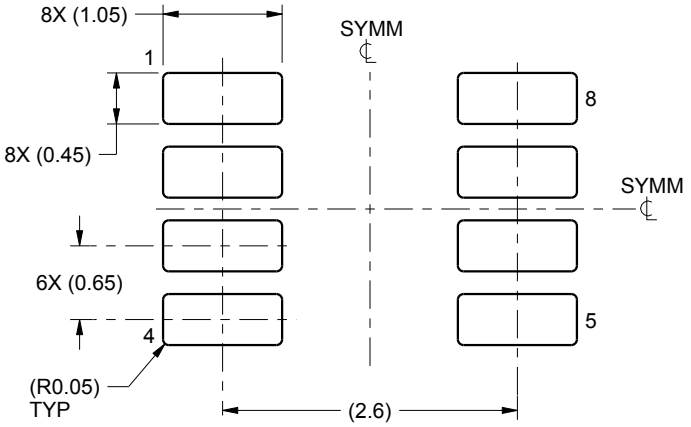

LAND PATTERN EXAMPLE
SCALE:15X

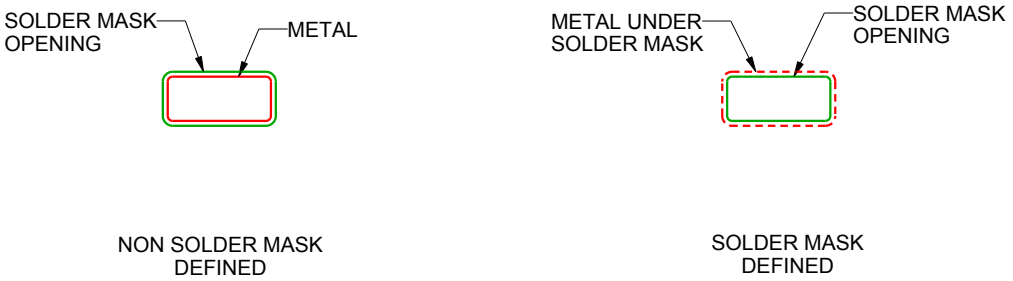

SOLDER MASK DETAILS

4222047/B 11/2015

NOTES: (continued)

4. Publication IPC-7351 may have alternate designs.
5. Solder mask tolerances between and around signal pads can vary based on board fabrication site.

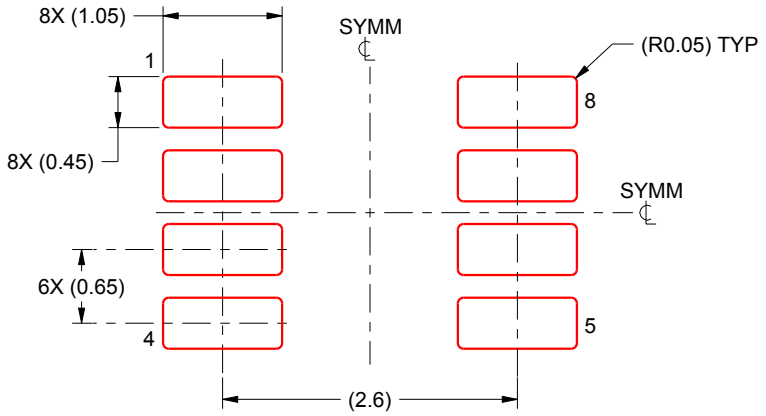

SOLDER PASTE EXAMPLE
BASED ON 0.125 mm THICK STENCIL
SCALE:15X

4222047/B 11/2015

NOTES: (continued)

6. Laser cutting apertures with trapezoidal walls and rounded corners may offer better paste release. IPC-7525 may have alternate design recommendations.
7. Board assembly site may have different recommendations for stencil design.

IMPORTANT NOTICE AND DISCLAIMER

TI PROVIDES TECHNICAL AND RELIABILITY DATA (INCLUDING DATASHEETS), DESIGN RESOURCES (INCLUDING REFERENCE DESIGNS), APPLICATION OR OTHER DESIGN ADVICE, WEB TOOLS, SAFETY INFORMATION, AND OTHER RESOURCES “AS IS” AND WITH ALL FAULTS, AND DISCLAIMS ALL WARRANTIES, EXPRESS AND IMPLIED, INCLUDING WITHOUT LIMITATION ANY IMPLIED WARRANTIES OF MERCHANTABILITY, FITNESS FOR A PARTICULAR PURPOSE OR NON-INFRINGEMENT OF THIRD PARTY INTELLECTUAL PROPERTY RIGHTS.

These resources are intended for skilled developers designing with TI products. You are solely responsible for (1) selecting the appropriate TI products for your application, (2) designing, validating and testing your application, and (3) ensuring your application meets applicable standards, and any other safety, security, or other requirements. These resources are subject to change without notice. TI grants you permission to use these resources only for development of an application that uses the TI products described in the resource. Other reproduction and display of these resources is prohibited. No license is granted to any other TI intellectual property right or to any third party intellectual property right. TI disclaims responsibility for, and you will fully indemnify TI and its representatives against, any claims, damages, costs, losses, and liabilities arising out of your use of these resources.

TI’s products are provided subject to TI’s Terms of Sale (www.ti.com/legal/termsofsale.html) or other applicable terms available either on ti.com or provided in conjunction with such TI products. TI’s provision of these resources does not expand or otherwise alter TI’s applicable warranties or warranty disclaimers for TI products.

Mailing Address: Texas Instruments, Post Office Box 655303, Dallas, Texas 75265
Copyright © 2019, Texas Instruments Incorporated