TPS65911 Integrated Power Management Unit Top Specification

1 Device Overview

1.1 Features

- Embedded Power Controller (EPC) With EEPROM Programmability
- Two Efficient Step-Down DC-DC Converters for Processor Cores (VDD1, VDD2)
- One Efficient Step-Down DC-DC Converter for I/O Power (VIO)
- One Controller for External FETs (VDDCtrl)
- Dynamic Voltage Scaling (DVS) for Processor Cores
- Eight LDO Voltage Regulators and One RTC LDO (Supply for Internal RTC)
- One High-Speed I^2C Interface for General-Purpose Control Commands (CTL-I^2C)
- Two Independent Enable Signals for Controlling Power Resources (EN1, EN2)
  - Alternatively, the EN1 and EN2 Pins can be Used as a High-Speed I^2C Interface Dedicated for Voltage Scaling for VDD1 and VDD2
- Thermal Shutdown Protection and Hot-Die Detection
- A Real-Time Clock (RTC) Resource With:
  - Oscillator for 32.768-kHz Crystal or 32-kHz Built-in RC Oscillator
  - Date, Time, and Calendar
  - Alarm Capability
- Nine Configurable GPIOs With Multiplexed Feature Support:
  - Four can be Used as Enable for External Resources, Included in Power-Up Sequence and Controlled by State Machine
  - As GPI, GPIOs Support Logic-Level Detection and can Generate Maskable Interrupt for Wakeup
  - Two of the GPIOs Have 10-mA Current Sink Capability for Driving LEDs
  - DC-DC Converters Switching Synchronization Through an External 3-MHz Clock
- Two Reset Inputs:
  - Cold Reset (HDRST)
  - Power Initialization Reset (PWRDN) for Thermal Reset Input
- 32-kHz Clock and Reset (NRESPWRON) for System and an Additional Output for Reset Signal
- Watchdog
- Two ON and OFF LED Pulse Generators and One PWM Generator
- Two Comparators for System Control, Connected to VCCS Pin
- A JTAG and Boundary Scan (Not Accessible in Functional Mode [Test Purpose])

1.2 Applications

Portable and Hand-Held Systems

1.3 Description

The TPS65911 device is an integrated power management IC (PMIC) available in a 98-pin 0.65-mm pitch BGA package. The TPS65911 device is dedicated to applications powered by one Li-Ion or Li-Ion polymer battery cell, 3-series Ni-MH cells, or a 5-V input, and applications that require multiple power rails. The device provides three step-down converters, one controller for external FETs to support high current rail, eight LDOs, and the device is designed to be a flexible PMIC for supporting different processors and applications.

Two of the step-down converters provide power for dual processor cores and support dynamic voltage scaling by a dedicated I^2C interface for optimum power savings. The third converter provides power for the I/Os and memory in the system.

The device includes eight general-purpose LDO regulators that provide a wide range of voltage and current capabilities. Five of the LDO regulators support 1 to 3.3 V with a 100-mV step and three (LDO1, LDO2, LDO4) support 1.0 to 3.3 V with a 50-mV step. All LDO regulators are fully controllable by the I^2C interface.

In addition to the power resources, the device contains an EPC to manage the power sequencing requirements of systems and an RTC. Power sequencing is programmable by EEPROM.

An IMPORTANT NOTICE at the end of this data sheet addresses availability, warranty, changes, use in safety-critical applications, intellectual property matters and other important disclaimers. PRODUCTION DATA.

Device Information(1)

PART NUMBER	PACKAGE	BODY SIZE (NOM)
TPS65911(2)	BGA MicroStar Junior™ (98)	9.00 mm × 6.00 mm

(1) For more information, see Section 9, *Mechanical, Packaging, and Orderable Information*.
(2) Refer to the corresponding user's guide for the complete EEPROM setting before ordering.

1.4 Functional Block Diagram

Figure 1-1 shows the top-level diagram of the device.

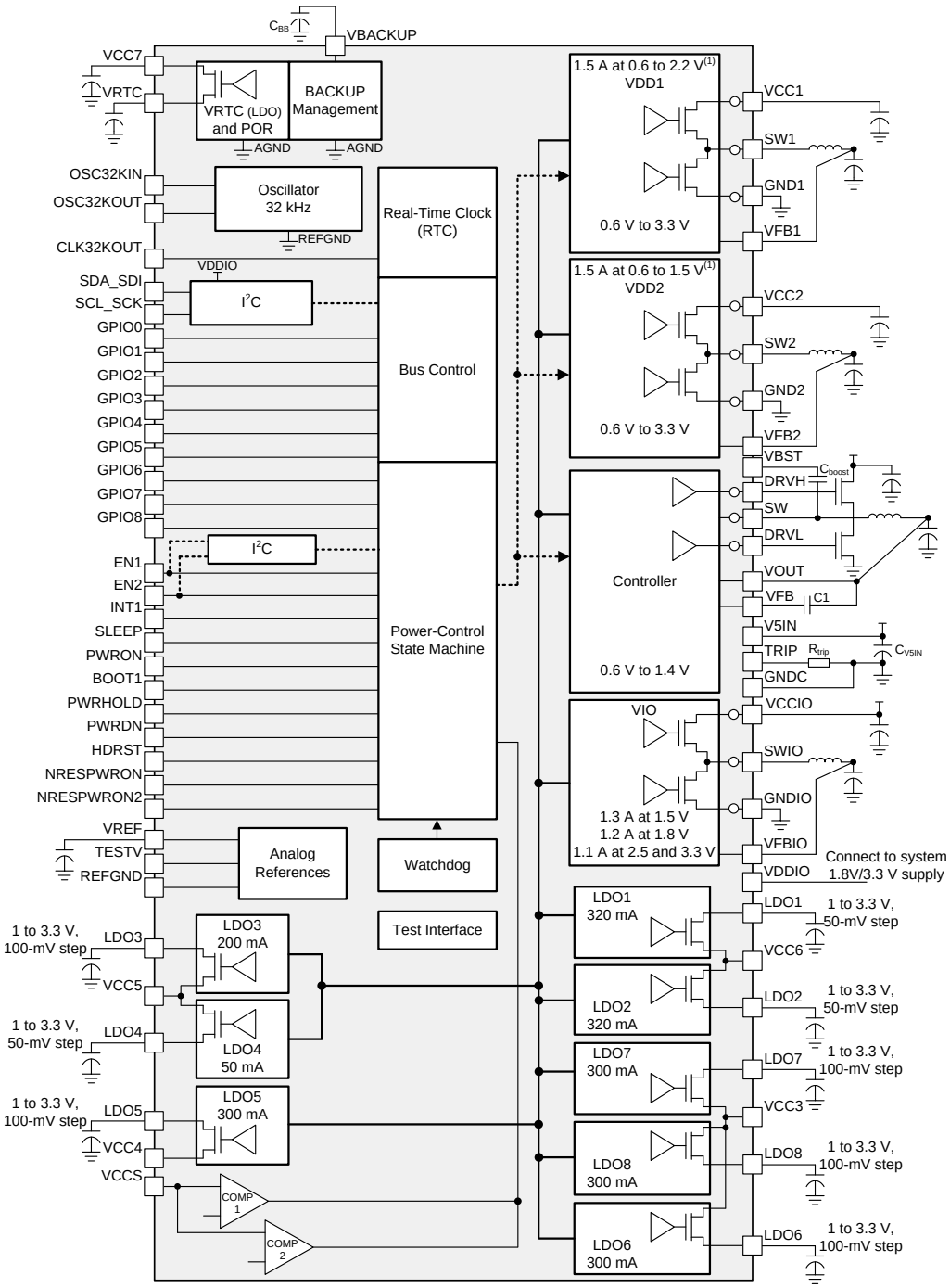

(1) For details on supported levels, see the electrical characteristics for VDD1 SMPS and VDD2 SMPS, and the Power Sources table.

Figure 1-1. Top-Level Functional Block Diagram

Copyright © 2010–2018, Texas Instruments Incorporated

Table of Contents

1 Device Overview **1**
1.1 Features 1
1.2 Applications 1
1.3 Description 1
1.4 Functional Block Diagram 2
2 Revision History **3**
3 Device Comparison Table **8**
4 Pin Configuration and Functions **9**
4.1 Pin Attributes 10
5 Specifications **12**
5.1 Absolute Maximum Ratings 12
5.2 ESD Ratings 12
5.3 Recommended Operating Conditions 13
5.4 Thermal Information 13
5.5 Electrical Characteristics: I/O Pullup and Pulldown 14
5.6 Electrical Characteristics: Digital I/O Voltage 14
5.7 Electrical Characteristics: Power Consumption 16
5.8 Electrical Characteristics: Power References and Thresholds 17
5.9 Electrical Characteristics: Thermal Monitoring and Shutdown 18
5.10 Electrical Characteristics: 32-kHz RTC Clock 18
5.11 Electrical Characteristics: Backup Battery Charger 19
5.12 Electrical Characteristics: VRTC LDO 19
5.13 Electrical Characteristics: VIO SMPS 20
5.14 Electrical Characteristics: VDD1 SMPS 21
5.15 Electrical Characteristics: VDD2 SMPS 23
5.16 Electrical Characteristics: VDDCtrl SMPS 25
5.17 Electrical Characteristics: LDO1 and LDO2 27
5.18 Electrical Characteristics: LDO3 and LDO4 29
5.19 Electrical Characteristics: LDO5 31
5.20 Electrical Characteristics: LDO6, LDO7, and LDO8 32
5.21 Timing and Switching Characteristics 35
6 Detailed Description **45**
6.1 Overview 45
6.2 Functional Block Diagram 46
6.3 Power Reference 47
6.4 Power Resources 47
6.5 Embedded Power Controller (EPC) 47
6.6 PWM and LED Generators 58
6.7 Dynamic Voltage Frequency Scaling and Adaptive Voltage Scaling Operation 58
6.8 32-kHz RTC Clock 58
6.9 Real Time Clock (RTC) 59
6.10 Backup Battery Management 62
6.11 Backup Registers 62
6.12 I^2C Interface 62
6.13 Thermal Monitoring and Shutdown 64
6.14 Interrupts 64
6.15 Register Maps 65
7 Applications, Implementation, and Layout **120**
7.1 Application Information 120
7.2 Typical Application 120
7.3 Power Supply Recommendations 131
8 Device and Documentation Support **132**
8.1 Device Support 132
8.2 Documentation Support 133
8.3 Receiving Notification of Documentation Updates 133
8.4 Community Resources 133
8.5 Trademarks 133
8.6 Electrostatic Discharge Caution 133
8.7 Glossary 134
9 Mechanical, Packaging, and Orderable Information **134**
9.1 Package Description 134

2 Revision History

NOTE: Page numbers for previous revisions may differ from page numbers in the current version.

Changes from Revision R (May 2018) to Revision S	Page
• Added TPS65911A to the device comparison table	8

Changes from Revision Q (March 2016) to Revision R	Page
• Changed Device Information table to a single row reflecting all orderable devices	2
• Changed the *Functional Block Diagram*	2
• Deleted lead temperature from the *Recommended Operating Conditions* table	13
• Corrected VIO output voltage from 2.2 V to 2.5 V	20
• Changed the VDDCtrl slew rate from 100 mV/20µs to 5 mV/µs for clarity	25
• Added SEL options for V_{OUT} < 1 V	30
• Added the *Overview* section	45
• Corrected VIO voltage from 2.2 V to 2.5 V	47
• Corrected the SEL bits for 1 V selection for LDO1_REG and LDO2_REG	87
• Corrected the SEL bits for 0.8 V to 0.9 V options. Added the SEL bits for 0.95 V.	90

Copyright © 2010–2018, Texas Instruments Incorporated

- Added the *Applications, Implementation, and Layout* section 120
- Added specific layout recommendations, and added layout diagrams which show the routing around the device .. 129

Changes from Revision P (August 2015) to Revision Q	Page
• Added TPS659118 device	1
• Deleted TPS659116 device	1
• Deleted "Ordering" column from *Device Comparison* table	8
• Corrected wording in Thermal Metric column of Section 5.4 and added table note 1	13
• Added disclaimer note to *Applications, Implementation, and Layout* section	120

Changes from Revision O (March 2015) to Revision P	Page
• Added TPS659114A2ZRCR device	1

Changes from Revision N (November 2014) to Revision O	Page
• Corrected orderable part number for TPS65911062 in the *Device Comparison Table*	8
• Corrected column heading from "MAX" to "UNIT"	35

Changes from Revision M (May 2014) to Revision N	Page
• Added TPS6591133 device	1
• Changed data sheet to TI standard format.	1

Copyright © 2010–2018, Texas Instruments Incorporated

Detailed Revision History

Version	Literature Number	Date	Notes
*	SWCS049	June 2010	See (1).
A	SWCS049A	February 2011	See (2).
B	SWCS049B	February 2011	See (3).
C	SWCS049C	May 2011	See (4).

(1) *TPS65911 Data Manual*, SWCS049 - Initial release.
(2) *TPS65911 Data Manual*, SWCS049A - Version A:
- Update Figure 1-1: LDO1, LDO2, LDO3, LDO6, and LDO7.
- Remove table, *SUPPORTED PROCESSORS AND CORRESPONDING PART NUMBERS*
- Update Section 5.3: Adjust pin names and add exception.
- Update Table 7-2: VDDCtrl SMPS, update FET part number.
- Update: Section 5.6: Add updated BOOT1 characteristics.
- Update: Section 5.17: Update LDO1 and LDO2 characteristics.
- Update Section 5.19: Update LDO5.
- Update Section 5.20: Update LDO6, LOD7, and LDO8.
- Update Table 6-1: Update LDO1, LDO2, LDO3, LOD7, and LDO8
- Update Table 6-2: Remove SEL [6:0] selection bits.
- Update Section 6.5.3.6: Add more explanation and reorganize section.
- Add explanation to: Section 6.5.3.6, Section 6.5.3.9, Section 6.5.3.10, and Section 6.5.3.11.
- Update Section 6.12: Add Section 6.12.1.
- Update Table 6-6, Register Rest values.
- Update Register Table: Table 6-43, Table 6-44, Table 6-53, and Table 6-55.
- Update : BGA Pin column.
- Update *Packaging Information*.

(3) *TPS65911 Data Manual*, SWCS049B - Version B:
- Update VCC6 in Section 5.1.

(4) *TPS65911 Data Manual*, SWCS049C - Version C:
- Update , BGA Pins: NRESPWRON, VCC1, GND1, VCCIO, GNDIO, AGND, and AGND2.

Detailed Revision History (continued)

Version	Literature Number	Date	Notes
D	SWCS049D	July 2011	See (5).
E	SWCS049E	July 2011	See (6).
F	SWCS049F	August 2011	See (7).

(5) *TPS65911 Data Manual*, SWCS049D - Version D:
- Update Section 5.1:
  - Add VBACKUP
  - Voltage range on balls HDRST - Replace "VRTCMAX + 0.32 by "7"
- Update Section 5.3:
  - Add VCC4 and VBACKUP
  - Input voltage range on pins or balls - Remove VCC4
- Update Section 5.5: Change "HDRST programmable.." to "HDREST, PWRDN programmable.."
- Update Section 5.12: Specify Input voltage range of VCC7
- Update Section 5.13: Add discharge resistance
- Update Section 5.14:
  - Add DC output voltage maximum value
  - Add discharge resistance
  - Update VGAIN_SEL test conditions and typ value
- Update Section 5.15:
  - Add DC output voltage maximum value
  - Add discharge resistance
  - Update VGAIN_SEL test conditions
- Update Section 5.16: Add tablenote to Rated output current 6000 mA
- Update Section 5.21.2:
  - Update introductory statement
  - Add note to Figure 5-1
  - Align Parameters in Table 5-3 with Figure 5-1
- Update Section 5.21.3: Add note toFigure 5-2
- Update Section 4: Add J3 to AGND in
- Update Section 6:
  - Update Table 6-1: VDD1 and VDD2 voltages
  - Device POWER ON enable conditions: Add additional device power enable condition
  - Device SLEEP enable conditions: Replace "... keeping the SLEEP signal floating, or ..." with "... keeping the SLEEP signal in the active polarity state, or..."
  - Device reset scenarios: Replace "VCC7 < VBNPR" with " VDD7 < VBNPR and BB < VBNPR"
  - Update introduction for Table 6-2
  - Update Table 6-2: Remove all values in EEPROM Boot column
  - Update Table 6-3:
    - Remove all values in EEPROM Boot column
    - Update INT_MSK_REG.VMBHI_MSK description
- Update *Package Thermal Characteristics*: Pin count from 96 to 98
- Update Section 6.15.1:
  - Update Table 6-37, Table 6-38, Table 6-40, and Table 6-41: SEL bit description
  - Update Table 6-67: Update VMBHI_IT_MSK bit description
  - Update Table 6-80: Update GPIO_SEL bit description - Replace LED1 out with PWM out

(6) *TPS65911 Data Manual*, SWCS049E - Version E: Update *Packaging Information*.

(7) *TPS65911 Data Manual*, SWCS049F - Version F:
- Add Section 7.2.4.1.
- Update Table 6-67: Update bit 1, VMBHI_IT_MSK description.
- Update Section 6.5.1: Device reset scenarios: Replace "VDD7 < VBNPR" with " VCC7 < VBNPR"
- Add *Ordering Information*.

Copyright © 2010–2018, Texas Instruments Incorporated

Detailed Revision History (continued)

Version	Literature Number	Date	Notes
G	SWCS049G	October 2011	See (8).
H	SWCS049H	May 2012	See (9)
I	SWCS049I	June 2012	See (10)
J	SWCS049J	September 2012	See (11)
K	SWCS049K	December 2012	See (12)
L	SWCS049L	February 2014	See (13)
M	SWCS049M	May 2014	See (14)

(8) *TPS65911 Data Manual*, SWCS049G - Version G:
- Update Section 5.17, Section 5.18, Section 5.19, Section 5.20:
  - Update turn-on time
  - Update DC line regulation
- Update Section 5.13
  - Update rated output current I_{OUTmax}.
- Update Section 5.14 and Section 5.15
  - Update rated output current I_{OUTmax}.
  - Update DC line regulation
  - Update DC load regulation
- Update Section 5.6
  - Update Related Open-Drain I/Os: GPIO2, GPIO7
- Update Section 5.16
  - Add Supply Current, Internal Reference Voltage, Output discharge, Output drivers, Boot strap switch, Duty and frequency control, softstart, current sense protection, UVLO, and thermal shutdown.
  - Remove DC line regulation, DC load regulation, Transient load regulation, Overshoot/undershoot, Rated output I_{OUTmax}, and Conversion efficiency.
  - Section 5.13 and Section 5.15 - Remove Iout = 1500 mA value
  - Table 6-1 - Update VIO, VDD1, VDD2, and VDDCtrl
  - Figure 1-1 - Update VIO, VDD1, and VDD2

(9) *TPS65911 Data Manual*, SWCS049H - Version H:
- Update Section 5.13
  - Update Rated output current description- add ILMAX bit configuration
  - Update PMOS current limit (high-side) description
  - Update NMOS current limit (high-side) description
- Update Figure 5-2 - CLK32KOUT out pin name (fixed typo)
- Update Figure 6-1
- Update Table 6-35, VIO_REG - Update ILMAX description
- Update Table 6-36, VDD1_REG - Update ILMAX and and TSTEP field numbers and VGAIN_SEL description
- Update Table 6-39, VDD2_REG - Update VGAIN_SEL description; align bit field numbering
- Update Table 6-43, VDDCRTL_OP_REG - Update SEL description
- Update Table 6-44, VDDCRTL_SR_REG - Update SEL description
- Update Table 5-4 - $t_{dbPWRONF}$: PWRON falling-edge debouncing delay - Update unit of measure
- Update Table 5-5 - Replace tACT2SLP by tACT2SLPCK32K
- Update Figure 5-5 - Replace tdONVMBHI by tdONPWHOLD
- Update Table 5-6 - Replace tdONVMBHI by tdONPWHOLD
- Update Section 6.5.3.6 - Replace 100 µs by 100 ms
- Update Table 6-56 - Add Bit 0,1, and 3 : TURN OFF RESET to the description
- Update Table 6-57 - Add TSLOT_LENGTH: TURN OFF RESET to the description
- Update Table 6-72 - Add footnote

(10) *TPS65911 Data Manual*, SWCS049I - Version I:
- Update Section 5.1 - Add VDDIO
- Update Section 5.3 - Add VDDIO
- Update Section 5.5 - Remove PWRDN
- Update - Remove PD from PWRDN

(11) *TPS65911 Data Manual*, SWCS049J - Version J:
- Update Section 5.3: Fix typo on HDRST pin
- Update Section 6.15.1: Update full reset:
  - Full reset: All digital logic of device is reset.
    - Caused by POR (power on reset) when VCC7 < VBNPR and BB < VBNPR

(12) *TPS65911 Data Manual*, SWCS049K - Version K
- Update Table 6-3 - Changed VMBCH_REG to EEPROM

(13) *TPS65911 Data Manual*, SWCS049L - Version L
- Update *Device Comparison Table* - Added TPS659116

(14) *TPS65911 Data Manual*, SWCS049M - Version M
- Update *Device Comparison Table* - Added TPS65911062

3 Device Comparison Table

DEVICE OPTION	MEMORY SUPPORT (DDR3 or DDR2)	PROCESSORS
TPS659110 (1)	DDR2	NVIDIA T30
	DDR3	NVIDIA T30
TPS659112 (1)	N/A	DM8168, DM8167, C6A8168, C6A8167, AM3894, AM3892
TPS659113 (1)	N/A	DM8148, DM8147, DM8146, C6A8148, C6A8147, C6A8143, AM3874, AM3872, AM3871
TPS6591133 (1)	N/A	DM8148, DM8147, DM8146, C6A8148, C6A8147, C6A8143, AM3874, AM3872, AM3871
TPS659114 (1)	DDR3	Freescale i.MX6
TPS659118 (1)	DDR3L	66AK2G02
TPS65911A (1)	DDR3L	66AK2G12

(1) Refer to the corresponding user's guide for the complete EEPROM setting before ordering.

Copyright © 2010–2018, Texas Instruments Incorporated

4 Pin Configuration and Functions

Figure 4-1 (top view) and Figure 4-2 (bottom view) show the 98-pin ZRC Plastic Ball-Grid Array (BGA).

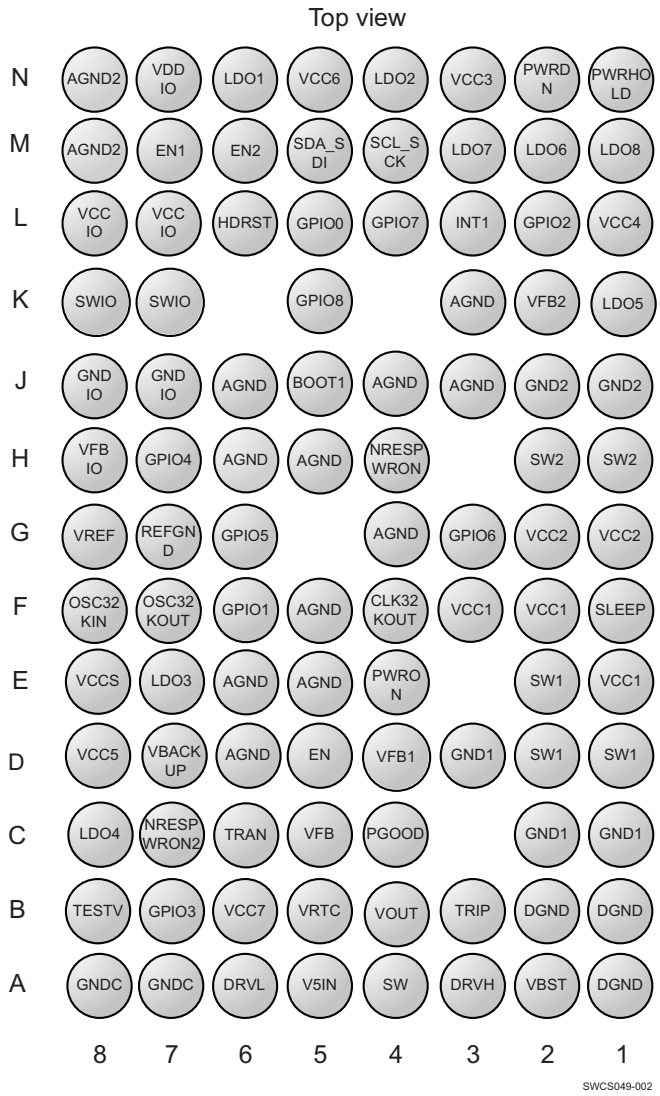

Figure 4-1. 98-Pin ZRC BGA MicroStar™ Junior (Top View)

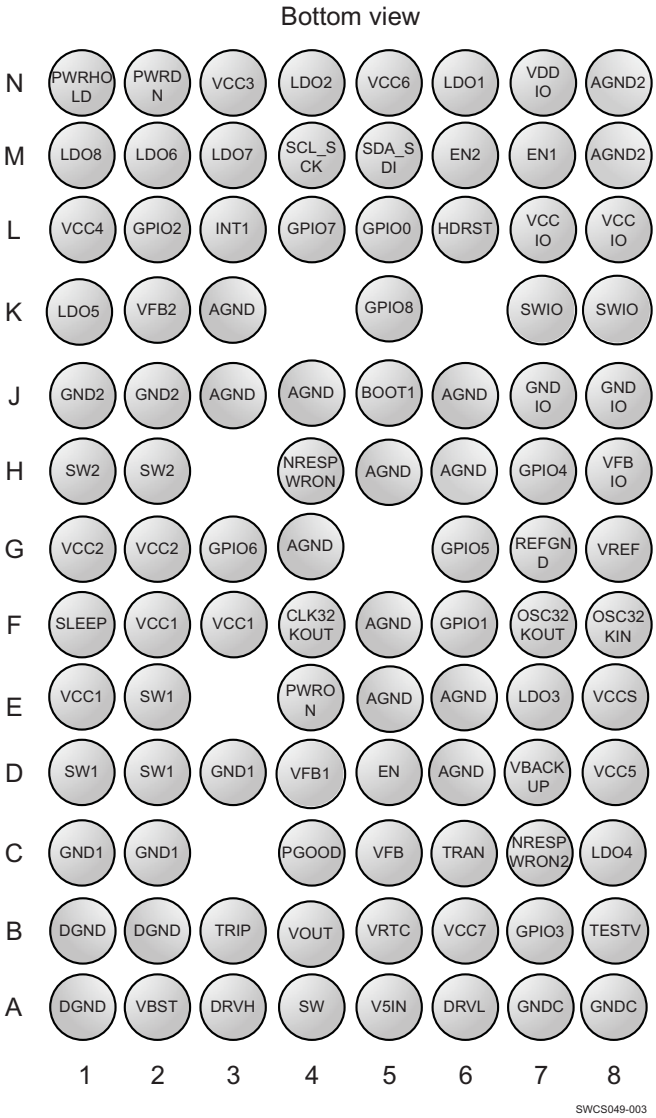

Figure 4-2. 98-Pin ZRC BGA MicroStar™ Junior (Bottom View)

4.1 Pin Attributes

Pin Attributes

PIN		I/O	TYPE	SUPPLIES	DESCRIPTION	PULLUP PULLDOWN
NAME	NO.					
AGND	D6, E5, E6, F5, G4, H5, H6, J3, J4, J6, K3	I/O	Power	AGND	Analog ground	No
AGND2	M8, N8	I/O	Power	AGND	Analog ground	No
BOOT1	J5	I	Digital	VRTC, DGND	Power-up sequence selection	No
CLK32KOUT	F4	O	Digital	VDDIO, DGND	32-kHz clock output	PD disable in ACTIVE or SLEEP state
DGND	A1, B1, B2	I/O	Power	DGND	Digital ground	No
DRVH	A3	O	Analog	VBST, GNDC	VDDCtrl, High-side FET driver output	
DRVL	A6	O	Analog	V5IN, GNDC	VDDCtrl, FET driver output	
EN	D5	I	Analog	VCC7, GNDC	Internal functional pin, leave floating	
EN1	M7	I/O	Digital	VDDIO, DGND	Enable for supplies or voltage scaling dedicated I^2C clock	External PU
EN2	M6	I/O	Digital	VDDIO, DGND	Enable for supplies or voltage scaling dedicated I^2C data	External PU
GNDC	A7, A8	I/O	Power	GNDC	VDDCtrl, Controller ground	
GNDIO	J7, J8	I/O	Power	VCCIO, GNDIO	VIO DCDC Power ground	No
GND1	C1, C2, D3	I/O	Power	VCC1, GND1	VDD1 DCDC Power ground	No
GND2	J1, J2	I/O	Power	VCC2, GND2	VDD2 DCDC Power ground	No
GPIO0	L5	I/O	Digital	VCC7, DGND	GPIO, push-pull or OD as output	OD: External PU
GPIO1	F6	I/O, OD	Digital	VRTC, DGND	GPIO or LED1 output	OD: External PU
GPIO2	L2	I/O, OD	Digital	VRTC, DGND	GPIO or DCDC clock synchronization	OD: External PU
GPIO3	B7	I/O, OD	Digital	VRTC, DGND	GPIO or LED2 output	OD: External PU
GPIO4	H7	I/O, OD	Digital	VRTC, DGND	GPIO	OD: External PU
GPIO5	G6	I/O, OD	Digital	VRTC, DGND	GPIO	OD: external PU
GPIO6	G3	I/O; OD	Digital	VRTC, DGND	GPIO	OD: External PU
GPIO7	L4	I/O, OD	Digital	VRTC, DGND	GPIO	OD: External PU
GPIO8	K5	I/O, OD	Digital	VRTC, DGND	GPIO	OD: External PU
HDRST	L6	I	Digital	VRTC, DGND	Cold reset	PD
INT1	L3	O	Digital	VDDIO, DGND	Interrupt flag	No
LDO1	N6	O	Power	VCC6, REFGND	LDO Regulator output	No
LDO2	N4	O	Power	VCC6, REFGND	LDO Regulator output	No
LDO3	E7	O	Power	VCC5, REFGND	LDO Regulator output	PD 5 µA
LDO4	C8	O	Power	VCC5, REFGND	LDO Regulator output	PD 5 µA
LDO5	K1	O	Power	VCC4, REFGND	LDO Regulator output	PD 5 µA
LDO6	M2	O	Power	VCC3, REFGND	LDO Regulator output	PD 5 µA
LDO7	M3	O	Power	VCC3, REFGND	LDO Regulator output	PD 5 µA
LDO8	M1	O	Power	VCC3, REFGND	LDO Regulator output	PD 5 µA
NRESPWRON	H4	O	Digital	VDDIO, DGND	Power off reset	PD active during device OFF state
NRESPWRON2	C7	O, OD	Digital	VRTC, DGND	Second NRESPWRON output	PD active during device OFF state. External pullup in ACTIVE state.
OSC32KIN	F8	I	Analog	VRTC, REFGND	32-kHz crystal oscillator	No
OSC32KOUT	F7	I	Analog	VRTC, REFGND	32-kHz crystal oscillator	No

Copyright © 2010–2018, Texas Instruments Incorporated

Pin Attributes (continued)

PIN		I/O	TYPE	SUPPLIES	DESCRIPTION	PULLUP PULLDOWN
NAME	NO.					
PGOOD	C4	O, OD	Analog	VCC7, GNDC	VDDCtrl, internal signal, leave floating (controller trimming only)	
PWRDN	N2	I	Analog	VRTC, DGND	Reset input (for example, thermal reset)	
PWRHOLD	N1	I	Digital	VRTC, DGND	Switch-on, switch off control signal or GPI	Programmable PD (default active)
PWRON	E4	I	Digital	VCC7, DGND	External switch-on control (ON button)	Programmable PU (default active)
REFGND	G7	I/O	Analog	REFGND	Reference ground	No
SCL_SCK	M4	I/O	Digital	VDDIO, DGND	I^2C bidirectional clock signal or serial peripheral interface clock input (multiplexed)	External PU
SDA_SDI	M5	I/O	Digital	VDDIO, DGND	I^2C bidirectional data signal or serial peripheral interface data input (multiplexed)	External PU
SLEEP	F1	I	Digital	VDDIO, DGND	ACTIVE-SLEEP state transition control signal	Programmable PD (default active)
SW	A4	I	Analog	VBST, GNDC	VDDCtrl, Switch node	
SWIO	K7, K8	O	Power	VCCIO, GNDIO	VIO DCDC switched output	No
SW1	D1, D2, E2	O	Power	VCC1, GND1	VDD1 DCDC switched output	No
SW2	H1, H2	O	Power	VCC2, GND2	VDD2 DCDC switched output	No
TESTV	B8	O	Analog	VCC7, AGND	Analog test output (DFT)	No
TRAN	C6	I	Analog	VCC7, GNDC	Internal functional pin, leave floating (controller trimming only)	
TRIP	B3	I	Analog	V5IN, GNDC	VDDCtrl, OCL detection threshold pin	
VBACKUP	D7	I	Power	VBACKUP, AGND	Backup battery input	No
VBST	A2	I	Analog	VBST, GNDC	VDDCtrl, supply for high-side FET driver	
VCCIO	L7, L8	I	Power	VCCIO, GNDIO	VIO DCDC power Input	No
VCCS	E8	I/O	Analog	VCC7, DGND	Input for two comparators	
VCC1	E1, F2, F3	I	Power	VCC1, GND1	VDD1 DCDC power Input	No
VCC2	G1, G2	I	Power	VCC2, GND2	VDD2 DCDC power Input	No
VCC3	N3	I	Power	VCC3, AGND2	LDO6, LDO7, LDO8 power Input	No
VCC4	L1	I	Power	VCC4, AGND2	LDO5 power Input	No
VCC5	D8	I	Power	VCC5, AGND	LDO3, LDO4 power Input	No
VCC6	N5	I	Power	VCC6, AGND2	LDO1, LDO2 power Input	No
VCC7	B6	I	Power	VCC7, REFGND	VRTC power input and analog references supply	No
VDDIO	N7	I	Power	VDDIO, DGND	Digital Ios supply	No
VFB	C5	I	Analog	VOUT, GNDC	VDDCtrl, slew rate control capacitance	
VFBIO	H8	I	Analog	VCC7, DGND	VIO feedback voltage	PD 5 µA
VFB1	D4	I	Analog	VCC7, DGND	VDD1 feedback voltage	PD 5 µA
VFB2	K2	I	Analog	VCC7, DGND	VDD2 DCDC feedback voltage	PD 5 µA
VOUT	B4	I	Analog	VOUT, GNDC	VDDCtrl, Feedback input	
VREF	G8	O	Analog	VCC7, REFGND	Band-gap voltage	No
VRTC	B5	O	Power	VCC7, REFGND	LDO Regulator output	PD 5 µA
V5IN	A5	I	Power	V5IN, GNDC	VDDCtrl, 5-V input	

Copyright © 2010–2018, Texas Instruments Incorporated

5 Specifications

5.1 Absolute Maximum Ratings

Over operating free-air temperature range (unless otherwise noted)[1]

		MIN	MAX	UNIT
Voltage range on pins	VCC1, VCC2, VCCIO, VCC3, VCC4, VCC5, VCC7, VBACKUP, V5IN, TRIP	–0.3	7	V
	VCC6	–0.3	3.6	
	VDDIO	–0.3	3.6	
	VBST	–0.3	37	
	SW	–5	30	
	SW1, SW2, SWIO	–0.3	7	
	VFB1, VFB2, VFBIO	–0.3	3.6	
	VOUT, VFB	–0.3	7	
	OSC32KIN, OSC32KOUT, BOOT1	–0.3	VRTCMAX + 0.3	
	SDA_SDI, SCL_SCK, EN2, EN1, SLEEP, INT1, CLK32KOUT, NRESPWRON	–0.3	VDDIOMAX + 0.3	
	PWRON	–0.3	7	
	PWRHOLD, GPIO0	–0.3	7	
Voltage range on pins	GPIO1, GPIO2, GPIO3, GPIO4, GPIO5, GPIO6, GPIO7, GPIO8[2]	–0.3	7	V
	HDRST	–0.3	7	
	NRESPWRON2[2]	–0.3	7	
	PWRDN[3]	–0.3	7	
	VCCS	–0.3	7	
Peak output current on all other pins than power resources		–5	5.0	mA
Functional junction temperature		–45	150	°C
Storage temperature, T_{stg}		–65	150	°C

(1) Stresses beyond those listed under *Absolute Maximum Ratings* may cause permanent damage to the device. These are stress ratings only, which do not imply functional operation of the device at these or any other conditions beyond those indicated under *Recommended Operating Conditions*. Exposure to absolute-maximum-rated conditions for extended periods may affect device reliability.
(2) I/O supplied from VRTC, but can be driven from VCC7 or to VCC7 voltage level.
(3) Input supplied from VRTC, but can be driven from VCC7 voltage level.

5.2 ESD Ratings

			VALUE	UNIT
V_{ESD}	Electrostatic discharge	Human body model (HBM), per ANSI/ESDA/JEDEC JS001[1]	±2000	V
		Charged device model (CDM), per JESD22-C101[2]	±500	

(1) JEDEC document JEP155 statues that 500-V HBM allows safe manufacturing with a standard ESD control process.
(2) JEDEC document JEP155 statues that 250-V HBM allows safe manufacturing with a standard ESD control process.

Copyright © 2010–2018, Texas Instruments Incorporated

5.3 Recommended Operating Conditions

Over operating free-air temperature range (unless otherwise noted)[1]

		MIN	NOM	MAX	UNIT
Input voltage range	VCC1, VCC2, VCCIO, VCC5, VCC7, VCCS, VCC4, VBACKUP	2.7	3.8	5.5	V
	VCC3	1.7	3.8	5.5	
	VDDIO	1.65	1.8/3.3	3.45	
	VCC6	1.4	3.3	3.6	
	V5IN	4.5		6.5	
	VBST	–0.1		3.45	
	SW (<30% of repetitive period)	–1		28	
	TRIP, VFB	–0.1		6.5	
	PWRON	0	3.8	5.5	
	SDA_SDI, SCL_SCK, EN2, EN1, SLEEP, INT1, CLK32KOUT	1.65	VDDIO	3.45	
	PWRHOLD, HDRST	1.65	VRTC	5.5	
Input voltage range	GPIO0, GPIO1, GPIO2, GPIO3, GPIO4, GPIO5, GPIO6, GPIO7, GPIO8, PWRDN	1.65	VRTC	5.5	V
	VCCS	0		5.5	
Ambient temperature		–40	27	85	°C
Junction temperature, T_J		–40	27	125	

(1) VCC7 should be connected to highest supply that is connected to device VCCx pin.
Exception: VCC4, VCC5, and V5IN inputs can be higher than VCC7. VCCS can be higher than VCC7 if VMBBUF_BYPASS = 0 (buffer is enabled).

5.4 Thermal Information

THERMAL METRIC[1] [2]		TPS65911x ZRC (BGA) 98 PINS	UNIT
$R_{\theta JA}$	Junction-to-ambient thermal resistance	32	°C/W
$R_{\theta JC(top)}$	Junction-to-case (top) thermal resistance	18	°C/W
$R_{\theta JB}$	Junction-to-board thermal resistance	16	°C/W
ψ_{JT}	Junction-to-top characterization parameter	0.2	°C/W
ψ_{JB}	Junction-to-board characterization parameter	12	°C/W
$R_{\theta JC(bot)}$	Junction-to-case (bottom) thermal resistance	N/A	°C/W

(1) For more information about traditional and new thermal metrics, see *Semiconductor and IC Package Thermal Metrics* application report.
(2) These values are based on a JEDEC-defined 2S2P system (with the exception of the Theta JC [$R_{\theta JC}$] value, which is based on a JEDEC-defined 1S0P system) and will change based on environment as well as application. For more information, see these EIA/JEDEC standards:
- JESD51-2, *Integrated Circuits Thermal Test Method Environmental Conditions - Natural Convection (Still Air)*
- JESD51-3, *Low Effective Thermal Conductivity Test Board for Leaded Surface Mount Packages*
- JESD51-7, *High Effective Thermal Conductivity Test Board for Leaded Surface Mount Packages*
- JESD51-9, *Test Boards for Area Array Surface Mount Package Thermal Measurements*

Power dissipation of 2 W and an ambient temperature of 70ºC is assumed.

5.5 Electrical Characteristics: I/O Pullup and Pulldown

Over operating free-air temperature range (unless otherwise noted)(1)

PARAMETER	TEST CONDITIONS	MIN	TYP	MAX	UNIT
SDA_SDI, SCL_SCK, SDASR_EN2, SCLSR_EN1 external pullup resistor	Connected to VDDIO		1.2		kΩ
SDA_SDI, SCL_SCK, SDASR_EN2, SCLSR_EN1 programmable pullup (DFT, default inactive)	Grounded, VDDIO = 1.8 V	–45%	8	45%	kΩ
SLEEP, PWRHOLD, programmable pulldown (default active)	At 1.8 V, VRTC = 1.8 V	2	4.5	10	µA
NRESPWRON, NRESPWRON2 pulldown	At 1.8 V, VCC7 = 5.5 V, OFF state	2	4.5	10	µA
32KCLKOUT pulldown (disabled in ACTIVE-SLEEP state)	At 1.8 V, VRTC = 1.8 V, OFF state	2	4.5	10	µA
PWRON programmable pullup (default active)	Grounded, VCC7 = 5.5 V	–40	–31	–15	µA
GPIO0-8 programmable pulldown (default active except GPIO0)	At 1.8 V, VRTC = 1.8 V, OFF state	2	4.5	10	µA
GPIO0-8 external pullup resistor	Connected to VDDIO	–20%	120	20%	kΩ
HDRST programmable pulldown (default active)	At 1.8 V, VRTC = 1.8 V	2	4.5	10	µA

(1) The internal pullups on the CTL-I^{2}C and SR-I^{2}C pins are used for test purposes or when the SR-I^{2}C interface is not used. Discrete pullups to the VIO supply must be mounted on the board in order to use the I^{2}C interfaces. The internal I^{2}C pullups must not be used for functional applications.

5.6 Electrical Characteristics: Digital I/O Voltage

Over operating free-air temperature range (unless otherwise noted)

PARAMETER	TEST CONDITIONS	MIN	TYP	MAX	UNIT
RELATED I/Os: PWRON					
Low-level input voltage (V_{IL})				0.3 × VBAT	V
High-level input voltage (V_{IH})		0.7 × VBAT			V
RELATED I/Os: PWRHOLD, GPIO0-8, PWRDN					
Low-level input voltage (V_{IL})				0.45	V
High-level input voltage (V_{IH})		1.3		VBAT	V
RELATED I/Os: BOOT1					
Low level input – Impedance between BOOT1 and GND				10	kΩ
High level input – Impedance between BOOT1 and VRTC				10	kΩ
HiZ level input – Impedance between BOOT1 and GND		500			kΩ
RELATED I/Os: SLEEP					
Low-level input voltage (V_{IL})				0.35 × VDDIO	V
High-level input voltage (V_{IH})		0.65 × VDDIO			V
RELATED I/Os: HDRST					
Low-level input voltage (V_{IL})				0.35 × VRTC	V
High-level input voltage (V_{IH})		0.65 × VRTC			V
RELATED I/Os: NRESPWRON, INT1, 32KCLKOUT					
Low-level output voltage (V_{OL})	I_{OL} = 100 µA			0.2	V
	I_{OL} = 2 mA			0.45	

Copyright © 2010–2018, Texas Instruments Incorporated

Electrical Characteristics: Digital I/O Voltage *(continued)*

Over operating free-air temperature range (unless otherwise noted)

PARAMETER	TEST CONDITIONS	MIN	TYP	MAX	UNIT
High-level output voltage (V_{OH})	I_{OH} = 100 µA	VDDIO – 0.2			V
	I_{OH} = 2 mA	VDDIO – 0.45			
RELATED I/Os: GPIO0 (PUSH-PULL MODE)					
Low-level output voltage (V_{OL})	I_{OL} = 100 µA			0.2	V
	I_{OL} = 2 mA			0.45	
High-level output voltage (V_{OH})	I_{OH} = 100 µA	VCC7 – 0.2			V
	I_{OH} = 2 mA	VCC7 – 0.45			
RELATED OPEN-DRAIN I/Os: GPIO0, GPIO4, GPIO5, GPIO6, GPIO8, NRESPWRON2					
Low-level output voltage (V_{OL})	I_{OL} = 100 µA			0.2	V
	I_{OL} = 2 mA			0.45	
RELATED OPEN-DRAIN I/Os: GPIO2, GPIO7					
Low-level output voltage (V_{OL})	I_{OL} = 100 µA			0.2	V
	I_{OL} = 1.9 mA			0.45	
RELATED OPEN-DRAIN I/Os: GPIO1, GPIO3					
Low-level output voltage (V_{OL})	I_{OL} = 100 µA			0.2	V
	I_{OL} = 2 mA			0.4	
I^2C-SPECIFIC RELATED I/Os: SCL, SDA, EN1, EN2					
Low-level input voltage (V_{IL})		–0.5		0.3 × VDDIO	V
High-level input voltage (V_{IH})		0.7 × VDDIO			V
Hysteresis		0.1 × VDDIO			V
Low-level output voltage (V_{OL}) at 3 mA (sink current), VDDIO = 1.8 V				0.2 × VDDIO	V
Low-level output voltage (V_{OL}) at 3 mA (sink current), VDDIO = 3.3 V				0.4 × VDDIO	V

Copyright © 2010–2018, Texas Instruments Incorporated

5.7 Electrical Characteristics: Power Consumption

Over operating free-air temperature range (unless otherwise noted)
All current consumption measurements are relative to the FULL chip, all VCC inputs set to VBAT voltage, COMP2 is off.

PARAMETER	TEST CONDITIONS		MIN	TYP	MAX	UNIT
Device BACKUP state	CK32K clock and RTC digital running (RTC_PWDN = 0)	VBAT = 2.4 V, VBACKUP = 0 V,		13	18	µA
		VBAT = 0 V, VBACKUP = 3.2 V, V5IN = 0 V		7	10	
Device OFF state	CK32K clock running, V5IN = 0	VBAT = 3.8 V		13	18	µA
		VBAT = 5 V		17	23	
		VBAT = 3.8 V, RTC digital running (RTC_PWDN = 0)		16	22	
		VBAT = 3.8 V, digital running (RTC_PWDN = 0), backup battery charger on, VBACKUP = 3.2 V		26	32	
Device SLEEP state	VBAT = 3.8 V, CK32K clock running:	3 DCDCs on, 5 LDOs and VRTC on, no load		292		µA
		3 DCDCs on, 3 LDOs and VRTC on, no load		279		
	VBAT = 3.8 V, CK32K clock and RTC digital running (RTC_PWDN = 0)	3 DCDCs on, 5 LDOs and VRTC on, no load		295		
	Additional current from V5IN = 5 V, if VDDCtrl is on, no load			320	500	
Device ACTIVE state	VBAT = 3.8 V, CK32K clock running:	3 DCDCs on, 5 LDOs and VRTC on, no load		1.2		mA
		3 DCDCs on, 3 LDOs and VRTC on, no load		1.05		
		3 DCDCs on PWM mode (VDD1_PSKIP = VDD2_PSKIP = VIO_PSKIP = 0), 5 LDOs and VRTC on, no load		23.6		
	Additional current from V5IN = 5 V, if VDDCtrl is on, no load			0.32	0.5	

Copyright © 2010–2018, Texas Instruments Incorporated

5.8 Electrical Characteristics: Power References and Thresholds

Over operating free-air temperature range (unless otherwise noted)

PARAMETER	TEST CONDITIONS		MIN	TYP	MAX	UNIT
Output reference voltage (VREF pin)	Device in active or low-power mode		–1%	0.85	1%	V
Main battery charged threshold, VMBCH (programmable)	Measured on VCCS pin Triggering monitored through NRESPRWON	VMBCH_SEL = 11000 to 11111		3.5		V
		VMBCH_SEL = 10111		3.45		
		...		...		
		VMBCH_SEL = 01110	–2%	3	2%	
		...		...		
		VMBCH_SEL = 00101		2.55		
		VMBCH_SEL = 00001 to 00100		2.5		
		VMBCH_SEL = 00000		Bypassed		
Main battery charged hysteresis threshold, VMBDCH	Measured on VCCS pin			VMBCH – 100 mV		V
Main battery discharged threshold, VMBDCH2 (programmable)	Measured on VCC7 pin (MTL) Triggering monitored through INT1	VMBDCH2_SEL = 11000 to 11111		3.5		V
		VMBDCH2_SEL = 10111		3.45		
		...		...		
		VMBDCH2_SEL = 01110	–2%	3	2%	
		...		...		
		VMBDCH2_SEL = 00101		2.55		
		VMBDCH2_SEL = 00001 to 00100		2.5		
		VMBDCH2_SEL = 00000		Bypassed		
Main battery discharged hysteresis threshold, VMBCH2	Measured on VCCS pin			VMBDCH2 – 100 mV		V
Main battery low threshold, VMBLO	measured on VCC7 pin (monitored on pin NRESPWRON)		2.5	2.6	2.7	V
MB comparator	MTL		2.4	2.5	2.6	
Main battery high threshold, VMBHI	VBACKUP = 0 V, Measured on pin VCC7 (MB comparator)		2.6	2.75	3	V
	VBACKUP = 3.2 V, Measured on pin VCC7 (trigger monitored though VCCS Idd, UPR comparator)		2.5	2.55	3	
Main battery not present threshold, VBNPR	Measured on pin VCC7 (Triggering monitored on pin VRTC)		1.9	2.1	2.2	V
Ground current (analog references + comparators + backup battery switch)	V_{CCx} = VBAT = 3.8 V except VCC6 = 3.6 V	Device in OFF state		8		µA
		Device in ACTIVE or SLEEP state		15		
		COMP2 consumption when enabled		5		
		Buffer consumption if COMP1 or COMP2 is active and buffer enabled		8		

5.9 Electrical Characteristics: Thermal Monitoring and Shutdown

Over operating free-air temperature range (unless otherwise noted)

PARAMETER	TEST CONDITIONS	MIN	TYP	MAX	UNIT
Hot-die temperature rising threshold	THERM_HDSEL[1:0] = 00		117		°C
	THERM_HDSEL[1:0] = 01		121		
	THERM_HDSEL[1:0] = 10	113	125	136	
	THERM_HDSEL[1:0] = 11		130		
Hot-die temperature hysteresis			10		°C
Thermal shutdown temperature rising threshold		136	148	160	°C
Thermal shutdown temperature hysteresis			10		°C
Ground current	Device in ACTIVE state, Temperature = 27°C, VCC7 = 3.8 V		6		µA

5.10 Electrical Characteristics: 32-kHz RTC Clock

Over operating free-air temperature range (unless otherwise noted)

PARAMETER	TEST CONDITIONS	MIN	TYP	MAX	UNIT
CLK32KOUT rise and fall time	C_L = 35 pF			10	ns
BYPASS CLOCK (OSC32KIN: INPUT, OSC32KOUT FLOATING)					
Input bypass clock frequency	OSCKIN input		32		kHz
Input bypass clock duty cycle	OSCKIN input	40%		60%	
Input bypass clock rise and fall time	10%–90%, OSC32KIN input		10	20	ns
CLK32KOUT duty cycle	Logic output signal	40%		60%	
Bypass clock setup time	32KCLKOUT output			1	ms
Ground current	Bypass mode			1.5	µA
CRYSTAL OSCILLATOR (CONNECTED FROM OSC32KIN TO OSC32KOUT)					
Crystal frequency	At specified load capacitor value		32.768		kHz
Crystal tolerance	At 27°C	–20	0	20	ppm
Frequency temperature coefficient	Oscillator contribution (not including crystal variation)	–0.5		0.5	ppm/°C
Secondary temperature coefficient		–0.04	–0.035	–0.03	ppm/°C^2
Voltage coefficient		–2		2	ppm/V
Max crystal series resistor	At fundamental frequency			90	kΩ
Crystal load capacitor	According to crystal data sheet	6		12.5	pF
Load crystal oscillator (C_{OSCIN}, C_{OSCOUT})	Parallel mode including parasitic PCB capacitor	12		25	pF
Quality factor		8000		80000	
Oscillator start-up time	On power on			2	s
Ground current			1.5		µA
RC OSCILLATOR (OSC32KIN: GROUNDED, OSC32KOUT FLOATING)					
Output frequency	CK32KOUT output		32		kHz
Output frequency accuracy	At 25°C	–15%	0%	15%	
Cycle jitter (RMS)	Oscillator contribution			10%	
Output duty cycle		40%	50%	60%	
Settling time				150	µs
Ground current	Active at fundamental frequency		4		µA

Copyright © 2010–2018, Texas Instruments Incorporated

5.11 Electrical Characteristics: Backup Battery Charger

Over operating free-air temperature range (unless otherwise noted)

PARAMETER	TEST CONDITIONS	MIN	TYP	MAX	UNIT
Backup battery charging current	VBACKUP = 0 to 2.8 V, BBCHEN = 1	350	650	900	µA
End-of-charge backup battery voltage	VCC5 = 3.6 V, $I_{VBACKUP}$ = –10 µA, BBSEL = 10	–3%	3.15	3%	V
	VCC5 = 3.6 V, $I_{VBACKUP}$ = –10 µA, BBSEL = 00	–3%	3	3%	
	VCC5 = 3.6 V, $I_{VBACKUP}$ = –10 µA, BBSEL = 01	–3%	2.52	3%	
	VCC5 = 3.6 V, $I_{VBACKUP}$ = –10 µA, BBSEL = 11	VBAT – 0.3 V		VBAT	
	VCC5 = 3.0 V, $I_{VBACKUP}$ = –10 µA, BBSEL = 10	VBAT – 0.2 V		VBAT	
Ground current	On mode		10		µA

5.12 Electrical Characteristics: VRTC LDO

Over operating free-air temperature range (unless otherwise noted)

PARAMETER	TEST CONDITIONS		MIN	TYP	MAX	UNIT
Input voltage on VCC7 (V_{IN})	On mode		2.5		5.5	V
	Backup mode		1.9		3	
DC output voltage (V_{OUT})	On mode, 3.0 V < V_{IN} < 5.5 V		1.78	1.83	1.88	V
	Backup mode, 2.3 V ≤ V_{IN} ≤ 2.6 V		1.72	1.78	1.84	
Rated output current (I_{OUTmax})	On mode		20			mA
	Backup mode		0.1			
DC load regulation	On mode, I_{OUT} = I_{OUTmax} to 0				100	mV
	Backup mode, I_{OUT} = I_{OUTmax} to 0				100	
DC line regulation	On mode, V_{IN} = 3.0 V to V_{INmax} at I_{OUT} = I_{OUTmax}				2.5	mV
	Backup mode, V_{IN} = 2.3 V to 5.5 V at I_{OUT} = I_{OUTmax}				100	
Transient load regulation	On mode, V_{IN} = V_{INmin} + 0.2 V to V_{INmax} I_{OUT} = I_{OUTmax} / 2 to I_{OUTmax} in 5 µs and I_{OUT} = I_{OUTmax} to I_{OUTmax} / 2 in 5 µs				50 (1)	mV
Transient line regulation	On mode, V_{IN} = V_{INmin} + 0.5 V to V_{INmin} in 30 µs and V_{IN} = V_{INmin} to V_{INmin} + 0.5 V in 30 µs, I_{OUT} = I_{OUTmax} / 2				25 (1)	mV
Turnon time	I_{OUT} = 0, V_{IN} rising from 0 up to 3.6 V, at V_{OUT} = 0.1 V up to V_{OUTmin}			2.2		ms
Ripple rejection	V_{IN} = V_{INDC} + 100 mV_{pp} tone, V_{INDC+} = V_{INmin} + 0.1 V to V_{INmax} at I_{OUT} = I_{OUTmax} / 2	*f* = 217 Hz		55		dB
		f = 50 kHz		35		
Ground current	Device in ACTIVE state			23		µA
	Device in BACKUP or OFF state			3		

(1) These parameters are not tested. They are used for design specification only.

5.13 Electrical Characteristics: VIO SMPS

Over operating free-air temperature range (unless otherwise noted)

PARAMETER	TEST CONDITIONS		MIN	TYP	MAX	UNIT
Input voltage on VCCIO and VCC7 (V_{IN})	V_{OUT} = 1.5 V, 1.8 V, or 2.5 V		2.7		5.5	V
	V_{OUT} = 3.3 V		V_{OUT}		5.5	
DC output voltage (V_{OUT})	PWM mode (VIO_PSKIP = 0) or pulse skip mode I_{OUT} = 0 to I_{MAX}	VSEL= 00	–3%	1.5	3%	V
		VSEL = 01	–3%	1.8	3%	
		VSEL = 10	–3%	2.5	3%	
		VSEL = 11	–3%	3.3	3%	
	Power down			0		
Rated output current (I_{OUTmax})	ILMAX[1:0] =11	VIO output voltage = 1.5 V	1300			mA
		VIO output voltage = 1.8 V	1200			
		VIO output voltage = 2.5 V	1100			
		VIO output voltage = 3.3 V	1100			
P-channel MOSFET On-resistance ($R_{DS(ON)_PMOS}$)	V_{IN} = V_{INmin}			300		mΩ
	V_{IN} = 3.8 V			250	400	
P-channel leakage current (I_{LK_PMOS})	V_{IN} = V_{INMAX}, SWIO = 0 V				2	µA
N-channel MOSFET On-resistance ($R_{DS(ON)_NMOS}$)	V_{IN} = V_{MIN}			300		mΩ
	V_{IN} = 3.8 V			250	400	
N-channel leakage current (I_{LK_NMOS})	V_{IN} = V_{INmax}, SWIO = V_{INmax}				2	µA
PMOS current limit (high-side)	Source current load, V_{IN} = V_{INmin} to V_{INmax}	ILMAX[1:0] = 00	650			mA
		ILMAX[1:0] = 01	1200			
		ILMAX[1:0] = 10	1700			
NMOS current limit (low-side)	Source current load V_{IN} = V_{INmin} to V_{INmax}	ILMAX[1:0] = 00	650			mA
		ILMAX[1:0] = 01	1200			
		ILMAX[1:0] = 10	1700			
	Sink current load V_{IN} = V_{INmin} to V_{INmax}	ILMAX[1:0] = 00	800			
		ILMAX[1:0] = 01	1200			
		ILMAX[1:0] = 10	1700			
DC load regulation	On mode, I_{OUT} = 0 to I_{OUTmax}				20	mV
DC line regulation	On mode, V_{IN} = V_{INmin} to V_{INmax} at I_{OUT} = I_{OUTmax}				20	mV
Transient load regulation	V_{IN} = 3.8 V, V_{OUT} = 1.8 V I_{OUT} = 0 to 500 mA, maximum slew = 100 mA/µs I_{OUT} = 700 to 1200 mA, maximum slew = 100 mA/µs				50	mV
Turnon time, t_{on}	I_{OUT} = 200 mA			350		µs
Overshoot	SMPS turned on			3%		
Power-save mode ripple voltage	PFM (Pulse skip mode) mode, I_{OUT} = 1 mA			0.025 × V_{OUT}		V_{PP}
Switching frequency			2.7	3	3.3	MHz
Duty cycle					100%	
Minimum on time ($T_{ON(MIN)}$)	P-channel MOSFET			35		ns
Discharge resistor for power-down sequence (R_{DIS})				30	50	Ω
VFBIO internal resistance			0.5	1		MΩ

Copyright © 2010–2018, Texas Instruments Incorporated

Electrical Characteristics: VIO SMPS *(continued)*

Over operating free-air temperature range (unless otherwise noted)

PARAMETER	TEST CONDITIONS		MIN	TYP	MAX	UNIT
Ground current (I_Q)	Off				1	µA
	PWM mode, I_{OUT} = 0 mA, V_{IN} = 3.8 V, VIO_PSKIP = 0			7500		
	PFM (pulse skipping) mode, no switching, 3-MHz clock on			250		
	Low-power (pulse skipping) mode, no switching ST[1:0] = 11			63		
Conversion efficiency	PWM mode, DCR_L < 50 mΩ, V_{OUT} = 1.8 V, V_{IN} = 3.6 V:	I_{OUT} = 10 mA		40%		
		I_{OUT} = 100 mA		83%		
		I_{OUT} = 400 mA		85%		
		I_{OUT} = 800 mA		80%		
		I_{OUT} = 1200 mA		75%		
	PFM mode, DCR_L < 50 mΩ, V_{OUT} = 1.8 V, V_{IN} = 3.6 V	I_{OUT} = 1 mA		68%		
		I_{OUT} = 10 mA		80%		
		I_{OUT} = 400 mA		85%		

5.14 Electrical Characteristics: VDD1 SMPS

Over operating free-air temperature range (unless otherwise noted)

PARAMETER	TEST CONDITIONS		MIN	TYP	MAX	UNIT
Input voltage on VCC1 and VCC7 (V_{IN})	V_{OUT} ≤ 2.7 V		2.7		5.5	V
	V_{OUT} > 2.7 V		V_{OUT}		5.5	
DC output voltage (V_{OUT})	VGAIN_SEL = 00, I_{OUT} = 0 to I_{OUTmax}	Max programmable voltage, SEL[6:0] = 1001011		1.5		V
		SEL[6:0] = 0110011	–3%	1.2	3%	
		Min programmable voltage, SEL[6:0] = 0000011		0.6		
		SEL[6:0] = 000000: power down		0		
	VGAIN_SEL = 10, SEL = 0101011 = 43, I_{OUT} = 0 to I_{OUTmax}		–3%	2.2	3%	
	VGAIN_SEL = 11, SEL = 0101011 = 43, I_{OUT} = 0 to I_{OUTmax}		–3%	3.3	3%	
DC output maximum voltage maximum value				3.3		V
DC output voltage programmable step ($V_{OUTSTEP}$)	VGAIN_SEL = 00, 72 steps			12.5		mV
Rated output current (I_{OUTmax})	VDD1 output voltage = (0.6 to 2.2 V)		1500			mA
	VDD1 output voltage = 3.2 V		1200			
	VDD1 output voltage = (1.2 V, 1.35 V, 1.5 V) V_{INmin} = 3 V		2000			
P-channel MOSFET On-resistance ($R_{DS(ON)_PMOS}$)	V_{IN} = V_{INmin}			300		mΩ
	V_{IN} = 3.8 V			250	400	
P-channel leakage current (I_{LK_PMOS})	V_{IN} = V_{INmax}, SW1 = 0 V				2	µA
N-channel MOSFET On-resistance ($R_{DS(ON)_NMOS}$)	V_{IN} = V_{MIN}			300		mΩ
	V_{IN} = 3.8 V			250	400	
N-channel leakage current (I_{LK_NMOS})	V_{IN} = V_{INmax}, SW1 = V_{INmax}				2	µA

Copyright © 2010–2018, Texas Instruments Incorporated

Electrical Characteristics: VDD1 SMPS *(continued)*

Over operating free-air temperature range (unless otherwise noted)

PARAMETER	TEST CONDITIONS		MIN	TYP	MAX	UNIT
PMOS current limit (high-side)	V_{IN} = V_{INmin} to V_{INmax}		1800			mA
NMOS current limit (low-side)	V_{IN} = V_{INmin} to V_{INmax}, source current load		1800			mA
	V_{IN} = V_{INmin} to V_{INmax}, sink current load		1800			
DC load regulation	On mode, V_{IN} = V_{INmin} to V_{INmax} at I_{OUT} = 1500 mA VDD1 output voltage = (0.6 to 1.5 V)				20	mV
	On mode, V_{IN} = V_{INmin} to V_{INmax} at I_{OUT} = 2000 mA VDD1 output voltage = (1.2 V, 1.35 V, 1.5 V) V_{INmin} = 3 V				30	
	On mode, V_{IN} = V_{INmin} to V_{INmax} at I_{OUT} = 1500 mA VDD1 output voltage = 2.2 V				30	
	On mode, V_{IN} = V_{INmin} to V_{INmax} at I_{OUT} = 1200 mA VDD1 output voltage = 3.2 V				30	
DC line regulation	On mode, V_{IN} = V_{INmin} to V_{INmax} at I_{OUT} = 1500 mA VDD1 output voltage = (0.6 to 1.5 V)				20	mV
	On mode, V_{IN} = V_{INmin} to V_{INmax} at I_{OUT} = 2000 mA VDD1 output voltage = (1.2 V, 1.35 V, 1.5 V) V_{INmin} = 3 V				30	
	On mode, V_{IN} = V_{INmin} to V_{INmax} at I_{OUT} = 1500 mA VDD1 output voltage = 2.2 V				30	
	On mode, V_{IN} = V_{INmin} to V_{INmax} at I_{OUT} = 1200 mA VDD1 output voltage = 3.2 V				30	
Transient load regulation	V_{IN} = 3.8 V, V_{OUT} = 1.2 V I_{OUT} = 0 to 500 mA , Maximum slew = 100 mA/µs I_{OUT} = 700 mA to 1.2 A , Maximum slew = 100 mA/µs				50	mV
Turnon time (t_{on}) off to on	I_{OUT} = 200 mA			350		µs
Output voltage transition rate	From V_{OUT} = 0.6 V to 1.5 V and V_{OUT} = 1.5 V to 0.6 V I_{OUT} = 500 mA	TSTEP[2:0] = 001		12.5		mV/µs
		TSTEP[2:0] = 011 (default)		7.5		
		TSTEP[2:0] = 111		2.5		
Overshoot	SMPS turned on			3%		
Power-save mode ripple voltage	PFM (pulse skip mode), I_{OUT} = 1 mA			0.025 × V_{OUT}		V_{PP}
Switching frequency			2.7	3	3.3	MHz
Duty cycle					100%	
Minimum on time ($t_{ON(MIN)}$) P-channel MOSFET				35		ns
Discharge resistor for power-down sequence R_{DIS}				30	50	Ω
VFB1 internal resistance			0.5	1		MΩ
Ground current (I_Q)	Off				1	µA
	PWM mode, I_{OUT} = 0 mA, V_{IN} = 3.8 V, VDD1_PSKIP = 0			7500		
	Pulse skipping mode, no switching			78		
	Low-power (pulse skipping) mode, no switching ST[1:0] = 11			63		

Copyright © 2010–2018, Texas Instruments Incorporated

Electrical Characteristics: VDD1 SMPS *(continued)*

Over operating free-air temperature range (unless otherwise noted)

PARAMETER	TEST CONDITIONS		MIN	TYP	MAX	UNIT
Conversion efficiency	PWM mode, DCR_L < 0.1 Ω, V_{OUT} = 1.2 V, V_{IN} = 3.6 V	I_{OUT} = 10 mA		35%		
		I_{OUT} = 100 mA		78%		
		I_{OUT} = 400 mA		80%		
		I_{OUT} = 800 mA		74%		
		I_{OUT} = 1500 mA		62%		
	PFM mode, DCR_L < 0.1 Ω, V_{OUT} = 1.2 V, V_{IN} = 3.6 V	I_{OUT} = 1 mA		59%		
		I_{OUT} = 10 mA		70%		
		I_{OUT} = 400 mA		80%		

5.15 Electrical Characteristics: VDD2 SMPS

Over operating free-air temperature range (unless otherwise noted)

PARAMETER	TEST CONDITIONS		MIN	TYP	MAX	UNIT
Input voltage on VCC2 and VCC7 (V_{IN})	V_{OUT} ≤ 2.7 V		2.7		5.5	V
	V_{OUT} > 2.7 V		V_{OUT}		5.5	
DC output voltage (V_{OUT})	VGAIN_SEL = 00, I_{OUT} = 0 to I_{OUTmax}	Max programmable voltage, SEL[6:0] = 1001011		1.5		V
		SEL[6:0] = 0110011	–3%	1.2	3%	
		Min programmable voltage, SEL[6:0] = 0000011		0.6		
		SEL[6:0] = 000000: power down		0		
		VGAIN_SEL = 10, SEL = 0101011 = 43	–3%	2.2	3%	
		VGAIN_SEL = 11, SEL = 0101011 = 43	–3%	3.3	3%	
DC output maximum voltage maximum value				3.3		V
DC output voltage programmable step ($V_{OUTSTEP}$)	VGAIN_SEL = 00, 72 steps			12.5		mV
Rated output current I_{OUTmax}	VDD2 output voltage = 0.6 to 1.5 V		1500			mA
	VDD2 output voltage = 2.2 V		1200			
	VDD2 output voltage = 3.2 V		1200			
P-channel MOSFET	V_{IN} = V_{INmin}			300		mΩ
On-resistance ($R_{DS(ON)_PMOS}$)	V_{IN} = 3.8 V			250	400	mΩ
P-channel leakage current (I_{LK_PMOS})	V_{IN} = V_{INmax}, SW2 = 0 V				2	µA
N-channel MOSFET	V_{IN} = V_{MIN}			300		mΩ
On-resistance ($R_{DS(ON)_NMOS}$)	V_{IN} = 3.8 V			250	400	mΩ
N-channel leakage current (I_{LK_NMOS})	V_{IN} = V_{INmax}, SW2 = V_{INmax}				2	µA
PMOS current limit (high-side)	V_{IN} = V_{INmin} to V_{INmax}, source current load		1800			mA
NMOS current limit (low-side)	V_{IN} = V_{INmin} to V_{INmax}, source current load		1800			mA
	V_{IN} = V_{INmin} to V_{INmax}, sink current load		1800			
DC load regulation	On mode, V_{IN} = V_{INmin} to V_{INmax} at I_{OUT} = 1500 mA VDD2 output voltage = 0.6 to 1.5V				20	mV
	On mode, V_{IN} = V_{INmin} to V_{INmax} at I_{OUT} = 1200 mA VDD2 output voltage = 2.2 to 3.3 V				30	

Copyright © 2010–2018, Texas Instruments Incorporated

Electrical Characteristics: VDD2 SMPS *(continued)*

Over operating free-air temperature range (unless otherwise noted)

PARAMETER	TEST CONDITIONS		MIN	TYP	MAX	UNIT
DC line regulation	On mode, V_{IN} = V_{INmin} to V_{INmax} at I_{OUT} = 1500 mA VDD2 output voltage = 0.6 to 1.5V				20	mV
	On mode, V_{IN} = V_{INmin} to V_{INmax} at I_{OUT} = 1200 mA VDD2 output voltage = 2.2 to 3.3 V				30	
Transient load regulation	V_{IN} = 3.8 V, V_{OUT} = 1.2 V I_{OUT} = 0 to 500 mA , Maximum slew = 100 mA/µs I_{OUT} = 700 mA to 1.2 A , Maximum slew = 100 mA/µs				50	mV
Turnon time (t_{on}) Off to on	I_{OUT} = 200 mA			350		µs
Output voltage transition rate	From V_{OUT} = 0.6 V to 1.5 V and V_{OUT} = 1.5 V to 0.6 V I_{OUT} = 500 mA	TSTEP[2:0] = 001		12.5		mV/µs
		TSTEP[2:0] = 011 (default)		7.5		
		TSTEP[2:0] = 111		2.5		
Overshoot	SMPS turned on			3%		
Power-save mode ripple voltage	PFM (pulse skip mode), I_{OUT} = 1 mA			0.025 × V_{OUT}		V_{PP}
Switching frequency			2.7	3	3.3	MHz
Duty cycle					100%	
Minimum on time P-Channel MOSFET				35		ns
Discharge resistor for power-down sequence (R_{DIS})				30	50	Ω
VFB2 internal resistance			0.5	1		MΩ
Ground current (I_Q)	Off				1	µA
	PWM mode, I_{OUT} = 0 mA, V_{IN} = 3.8 V, VDD2_PSKIP = 0			7500		
	PFM (pulse skipping) mode, no switching			78		
	Low-power (pulse skipping) mode, no switching ST[1:0] = 11			63		
Conversion efficiency	PWM mode, DCR_L < 50 mΩ, V_{OUT} = 1.2 V, V_{IN} = 3.6 V	I_{OUT} = 10 mA		35%		
		I_{OUT} = 100 mA		78%		
		I_{OUT} = 400 mA		80%		
		I_{OUT} = 800 mA		74%		
		I_{OUT} = 1200 mA		66%		
		I_{OUT} = 1500 mA		62%		
	PFM mode, DCR_L < 50 mΩ, V_{OUT} = 1.2 V, V_{IN} = 3.6 V	I_{OUT} = 1 mA		59%		
		I_{OUT} = 10 mA		70%		
		I_{OUT} = 400 mA		80%		
	PWM mode, DCR_L < 50 mΩ, V_{OUT} = 3.3 V, V_{IN} = 5 V	I_{OUT} = 10 mA		39%		
		I_{OUT} = 100 mA		85%		
		I_{OUT} = 400 mA		91%		
		I_{OUT} = 800 mA		90%		
		I_{OUT} = 1200 mA		86%		
	PFM mode, DCR_L < 50 mΩ, V_{OUT} = 3.3 V, V_{IN} = 5 V	I_{OUT} = 1 mA		80%		
		I_{OUT} = 10 mA		82%		
		I_{OUT} = 400 mA		92%		

Copyright © 2010–2018, Texas Instruments Incorporated

5.16 Electrical Characteristics: VDDCtrl SMPS

Over operating free-air temperature range (unless otherwise noted)

PARAMETER		TEST CONDITIONS		MIN	TYP	MAX	UNIT
V_{IN}	Input voltage for external FETs			3		25	V
	Input voltage V5IN			4.5		5.5	V
V_{OUT}	DC output voltage	I_{OUT} = 0 to I_{OUTmax}: maximum programmable voltage	SEL[6:0] = 1000011 to 1111111		1.4		V
			...				
			SEL[6:0] = 0110001		1.2		
			...				
		I_{OUT} = 0 to I_{OUTmax}: minimum programmable voltage	SEL[6:0] = 0000001 to 0000011		0.6		
			SEL[6:0] = 000000: power down		0		
$V_{OUTSTEP}$	DC output voltage programmable step				12.5		mV
t_{on}	Turnon time, off to on	From EN high to V_{out} = 95%			900		µs
	Output voltage transition rate	From V_{OUT} = 0.6 V to 1.4 V and V_{OUT} = 1.4 V to 0.6 V I_{OUT} = 500 mA			5		(1)mV/µs
	Switching frequency	I_{OUT} = 100 mA			10		kHz
		I_{OUT} = 1 A			100		
		I_{OUT} = 5 A			340		
I_Q	Ground current, off					1	µA
	Ground current, no load				400	500	
SUPPLY CURRENT							
$I_{(V5IN)}$	V5IN supply current	V5IN current, T_A = 25°C, No load $V_{(EN)}$ = 5 V, $V_{(VOUT)}$ = 0.63 V			320	500	µA
$I_{SD(V5IN)}$	V5IN shutdown current	V5IN current, T_A = 25°C, No load, $V_{(EN)}$ = 0 V				1	µA
INTERNAL REFERENCE VOLTAGE							
	Reference			0.5974	0.603	0.6086	V
	Mismatch of resistive divider	Specified by design. Not production tested.		(–0.0063 × VOUT + 0.0035)%	VOUT%	0.001 × VOUT – 0.0003%	
$I_{(VOUT)}$	Output current	Specified by design. Not production tested. $I_{(VOUT)} = 10^{-4} \times VOUT - 6 \times 10^{-5}$	V_{OUT} = 0.6 V		1.25		µA
			...		...		
			V_{OUT} = 1 V		40		
			...		...		
			V_{OUT} = 1.3875 V		78.75		
OUTPUT DISCHARGE							
I_{Dischg}	Output discharge current from SW pin	$V_{(EN)}$ = 0 V, $V_{(SW)}$ = 0.5 V		5	13		mA
OUTPUT DRIVERS							
$R_{(DRVH)}$	DRVH resistance	Source, $I_{(DRVH)}$ = –50 mA			1.5	3	Ω
		Sink, $I_{(DRVH)}$ = 50 mA			0.7	1.8	
R(DRVL)	DRVL resistance	Source, $I_{(DRVL)}$ = –50 mA			1	2.2	
		Sink, $I_{(DRVL)}$ = 50 mA			0.5	1.2	
t_D	Dead time	DRVH-off to DRVL-on		7	17	30	ns
		DRVH-off to DRVL-on		10	22	35	
BOOT STRAP SWITCH							
$V_{(FBST)}$	Forward voltage	$V_{(V5IN-VBST)}$, I_F = 10 mA, T_A = 25°C			0.1	0.2	V
I_{lkg}	VBST leakage current	$V_{(VBST)}$ = 34.5 V, $V_{(SW)}$ = 28 V, T_A = 25°C			0.01	1.5	µA

(1) The output voltage is changed with 50 mV/10 µs steps

Copyright © 2010–2018, Texas Instruments Incorporated

Electrical Characteristics: VDDCtrl SMPS *(continued)*

Over operating free-air temperature range (unless otherwise noted)

PARAMETER		TEST CONDITIONS	MIN	TYP	MAX	UNIT
DUTY AND FREQUENCY CONTROL						
$t_{OFF(min)}$	Minimum off-time	T_A = 25°C	150	260	400	ns
$t_{ON(min)}$	Minimum on-time	V_{IN} = 28 V, V_{OUT} = 0.6 V, T_A = 25°C Specified by design. Not production tested.		86		ns
f_{SW}	Switching frequency	T_A = 25°C	312	340	368	kHz
SOFTSTART						
t_{ss}	Internal SS time	From $V_{(EN)}$ = high to V_{OUT} = 95%		0.9		ms
PROTECTION: CURRENT SENSE						
$V_{(TRIP)}$	TRIP source current	$V_{(TRIP)}$ = 1 V, T_A = 25°C	9	10	11	µA
	TRIP current temperature coefficient	On the basis of 25°C		4700		ppm/°C
$V_{(TRIP)}$	Current limit threshold setting range	$V_{(TRIP-GND)}$ Voltage	0.2		3	V
V_{OCL}	Current limit threshold	$V_{(TRIP)}$ = 3 V	355	375	395	mV
		$V_{(TRIP)}$ = 1.6 V	185	200	215	
		$V_{(TRIP)}$ = 0.2 V	17	25	33	
V_{OCLN}	Negative current limit threshold	$V_{(TRIP)}$ = 3 V	–395	–375	–355	mV
		$V_{(TRIP)}$ = 1.6 V	–215	–200	–185	
		$V_{(TRIP)}$ = 0.2 V	–33	–25	–17	
	Auto zero cross adjustable range	Positive	3	15		mV
		Negative		–15	–3	
UVLO						
	V5IN UVLO threshold	Wake up	4.2	4.38	4.5	V
		Shutdown	3.7	3.93	4.1	
THERMAL SHUTDOWN						
T_{SDN}	Thermal shutdown threshold	Shutdown temperature Specified by design. Not production tested.		145		°C
		Hysteresis Specified by design. Not production tested.		10		

Copyright © 2010–2018, Texas Instruments Incorporated

5.17 Electrical Characteristics: LDO1 and LDO2

Over operating free-air temperature range (unless otherwise noted)

PARAMETER	TEST CONDITIONS		MIN	TYP	MAX	UNIT
Input voltage on VCC6 (V_{IN})	V_{OUT} (LDO1) = 1.05 V at 320 mA and V_{OUT} (LDO2) = 1.05 V at 160 mA		1.4		3.6	V
	V_{OUT} (LDO1) = 1.2 V or 1.5 V at 100 mA and V_{OUT} (LDO2) = 1.2 V or 1.1 V or 1.0 V		1.7		3.6	
	V_{OUT} (LDO1) = 1.5 V and V_{OUT} (LDO1, LDO2) = 1.8 V at 200 mA		2.1		3.6	
	V_{OUT} (LDO1) = 1.8 V and V_{OUT} (LDO2) = 1.8 V		2.7		3.6	
	V_{OUT} (LDO1) = 2.7 V		3.2		3.6	
	V_{OUT} (LDO1) = V_{OUT} (LDO2) = 3.3 V		3.5		3.6	
LDO1						
DC output voltage (V_{OUT})	ON and Low-power mode, V_{IN} = V_{INmin} to V_{INmax} (V_{INmax} 3.6 V)	SEL[7:2] = 000100		1		V
		SEL[7:2] = 000101		1.05		
		...	–3%	...	3%	
		SEL[7:2] = 110001		3.25		
		SEL[7:2] = 110010		3.3		
Rated output current I_{OUTmax}	On mode		320			mA
	Low-power mode		1			
Load current limitation (short-circuit protection)	On mode, V_{OUT} = V_{OUTmin} – 100 mV		450	600	1000	mA
Dropout voltage V_{DO}	ON mode, V_{DO} = V_{IN} – V_{OUT}, V_{IN} = 1.4 V, I_{OUT} = I_{OUTmax}				350	mV
DC load regulation	On mode, I_{OUT} = I_{OUTmax} to 0				12	mV
DC line regulation	On mode, V_{IN} = V_{INmin} to V_{INmax} at I_{OUT} = I_{OUTmax}				4	mV
Transient load regulation	ON mode, V_{IN} = 1.5 V, V_{OUT} = 1.05 V I_{OUT} = 0.1 × I_{OUTmax} to 0.9 × I_{OUTmax} in 5 µs and I_{OUT} = 0.9 × I_{OUTmax} to 0.1 × I_{OUTmax} in 5 µs			20	40	mV
Transient line regulation	On mode, V_{IN} = 2.7 + 0.5 V to 2.7 in 30 µs, and V_{IN} = 2.7 to 2.7 + 0.5 V in 30 µs, I_{OUT} = I_{OUTmax}			5	10	mV
Turnon time	V_{OUT} = (1 to 1.8 V), at I_{OUT} = 0 measured from V_{OUT} = 0.1 V up to 97% of V_{OUT}		30		150	µs
	V_{OUT} = (1.9 to 3.3 V), at I_{OUT} = 0 measured from V_{OUT} = 0.1 V up to 97% of V_{OUT}		50		230	
Turnon inrush current				300	600	mA
Ripple rejection	V_{IN} = V_{INDC} + 100 mV_{pp} tone, V_{INDC+} = 1.8 V, I_{OUT} = I_{OUTmax} / 2	*f* = 217 Hz		70		dB
		f = 20 kHz		40		
LDO1 internal resistance	LDO off			600		Ω
Ground current	On mode, I_{OUT} = 0			63	75	µA
	On mode, I_{OUT} = I_{OUTmax}				2000	
	Low-power mode			22	20	
	Off mode (max 85°C)				2.7	

Electrical Characteristics: LDO1 and LDO2 *(continued)*

Over operating free-air temperature range (unless otherwise noted)

PARAMETER	TEST CONDITIONS		MIN	TYP	MAX	UNIT
LDO2						
DC output voltage V_{OUT}	On and low-power mode, V_{IN} = V_{INmin} to V_{INmax} (V_{INmax} = 3.6 V)	SEL[7:2] = 000100		1		V
		SEL[7:2] = 000101		1.05		
		...	–3%	...	3%	
		SEL[7:2] = 110001		3.25		
		SEL[7:2] = 110010		3.3		
Rated output current I_{OUTmax}	On mode		320			mA
	Low-power mode		1			
Load current limitation (short-circuit protection)	On mode, V_{OUT} = V_{OUTmin} – 100 mV		450	600	1000	mA
Dropout voltage V_{DO}	ON mode, V_{DO} = V_{IN} – V_{OUT}, V_{IN} = 1.4 V, I_{OUT} = I_{OUTmax}				350	mV
DC load regulation	On mode, I_{OUT} = I_{OUTmax} to 0				12	mV
DC line regulation	On mode, V_{IN} = V_{INmin} to V_{INmax} at I_{OUT} = I_{OUTmax}				4	mV
Transient load regulation	ON mode, V_{IN} = 1.5 V, V_{OUT} = 1.05 V I_{OUT} = 0.1 × I_{OUTmax} to 0.9 × I_{OUTmax} in 5 µs and I_{OUT} = 0.9 × I_{OUTmax} to 0.1 × I_{OUTmax} in 5 µs			20	40	mV
Transient line regulation	On mode, V_{IN} = 2.7 + 0.5 V to 2.7 in 30 µs, and V_{IN} = 2.7 to 2.7 + 0.5 V in 30 µs, I_{OUT} = I_{OUTmax}			5	10	mV
Turnon time	V_{OUT} = (1 to 1.8 V), at I_{OUT} = 0 measured from V_{OUT} = 0.1 V up to 97% of V_{OUT}		30		150	µs
	V_{OUT} = (1.9 to 3.3 V), at I_{OUT} = 0 measured from V_{OUT} = 0.1 V up to 97% of V_{OUT}		50		230	
Turnon inrush current				300	600	mA
Ripple rejection	V_{IN} = V_{INDC} + 100 mV_{pp} tone, V_{INDC+}= 1.8 V, I_{OUT} = I_{OUTmax} / 2	*f* = 217 Hz		70		dB
		f = 20 kHz		40		
LDO2 internal resistance	LDO off			600		Ω
Ground current	On mode, I_{OUT} = 0			63	75	µA
	On mode, I_{OUT} = I_{OUTmax}				2000	
	Low-power mode			22	20	
	Off mode (maximum 85°C)				2.7	

Copyright © 2010–2018, Texas Instruments Incorporated

5.18 Electrical Characteristics: LDO3 and LDO4

Over operating free-air temperature range (unless otherwise noted)

PARAMETER	TEST CONDITIONS		MIN	TYP	MAX	UNIT
Input voltage on VCC5 (V_{IN})	V_{OUT} (LDO3) = 1.8 V and V_{OUT} (LDO4) = 1.8 V or 1.1 V or 1.0 V		2.7		5.5	V
	V_{OUT} (LDO3) = 2.6 V and V_{OUT} (LDO4) = 2.5 V		3.0		5.5	
	V_{OUT} (LDO3) = 2.8 V		3.2		5.5	
LDO3						
DC output voltage (V_{OUT})	On and low-power mode, V_{OUT} = 1.0 to 3.3 V, V_{IN} = V_{INmin} to V_{INmax}	SEL[6:2] = 00010		1		V
		SEL[6:2] = 00011		1.1		
		...	–3%	...	3%	
		SEL[6:2] = 11000		3.2		
		SEL[6:2] = 11001		3.3		
Rated output current (I_{OUTmax})	On mode		200			mA
	Low-power mode		1			
Load current limitation (short-circuit protection)	On mode, V_{OUT} = V_{OUTmin} – 100 mV		400	550	650	mA
Dropout voltage (V_{DO})	On mode, V_{OUTtyp} = 3.3 V, V_{DO} = V_{IN} – V_{OUT}, V_{IN} = 3.6 V, I_{OUT} = I_{OUTmax}			150	250	mV
DC load regulation	On mode, I_{OUT} = I_{OUTmax} to 0				10	mV
DC line regulation	On mode, V_{IN} = V_{INmin} to V_{INmax} at I_{OUT} = I_{OUTmax}				4	mV
Transient load regulation	On mode, V_{IN} = 2.7 V, V_{OUTtyp} = 1.8 V I_{OUT} = 0.1 × I_{OUTmax} to 0.9 × I_{OUTmax} in 5 µs and I_{OUT} = 0.9 × I_{OUTmax} to 0.1 × I_{OUTmax} in 5 µs			15	22	mV
Transient line regulation	On mode, V_{OUTtyp} = 1.8V, I_{OUT} = I_{OUTmax}, V_{IN} = V_{INmin} + 0.5 V to V_{INmin} in 30 µs and V_{IN} = V_{INmin} to V_{INmin} + 0.5 V in 30 µs, I_{OUT} = I_{OUTmax}			0.5	1	mV
Turnon time	V_{OUT} = (1 to 1.8 V), at I_{OUT} = 0 measured from V_{OUT} = 0.1 V up to 97% of V_{OUT}		30		150	µs
	V_{OUT} = (1.9 to 3.3 V), at I_{OUT} = 0 measured from V_{OUT} = 0.1 V up to 97% of V_{OUT}		50		200	
Turnon inrush current				200	450	mA
Ripple rejection	V_{IN} = V_{INDC} + 100 mV_{pp} tone, V_{INDC+} = 3.8 V, I_{OUT} = I_{OUTmax} / 2	*f* = 217 Hz		70		dB
		f = 50 Hz		40		
LDO3 internal resistance	LDO off			500		kΩ
Ground current	On mode, I_{OUT} = 0			65	76	µA
	On mode, I_{OUT} = I_{OUTmax}				2000	
	Low-power mode			14	22	
	Off mode				1	
LDO4						

Electrical Characteristics: LDO3 and LDO4 *(continued)*

Over operating free-air temperature range (unless otherwise noted)

PARAMETER	TEST CONDITIONS		MIN	TYP	MAX	UNIT
DC output voltage (V_{OUT})	On and low-power mode, V_{IN} = V_{INmin} to V_{INmax} (1)	SEL[7:2] = 000000		0.8		V
		SEL[7:2] = 000001		0.85		
		SEL[7:2] = 000010		0.9		
		SEL[7:2] = 000011		0.95		
		SEL[7:2] = 000100		1		
		SEL[7:2] = 000101		1.05		
		...	–3%	...	3%	
		SEL[7:2] = 110001		3.25		
		SEL[7:2] = 110010		3.3		
Rated output current (I_{OUTmax})	On mode		50			mA
	Low-power mode		1			
Load current limitation (short-circuit protection)	On mode, V_{OUT} = V_{OUTmin} – 100 mV		200	400	500	mA
Dropout voltage (V_{DO})	On mode, V_{OUTtyp} = 2.5 V, V_{DO} = V_{IN} – V_{OUT} V_{IN} = 3.6 V, I_{OUT} = I_{OUTmax}			100	160	mV
DC load regulation	On mode, I_{OUT} = I_{OUTmax} to 0				5	mV
DC line regulation	On mode, V_{IN} = V_{INmin} to V_{INmax} at I_{OUT} = I_{OUTmax}				4	mV
Transient load regulation	On mode, V_{IN} = 2.7 V, V_{OUTtyp} = 1.8 V I_{OUT} = 0.1 × I_{OUTmax} to 0.9 × I_{OUTmax} in 5 µs and I_{OUT} = 0.9 × I_{OUTmax} to 0.1 × I_{OUTmax} in 5 µs			6	10	mV
Transient line regulation	On mode, V_{IN} = V_{INmin} + 0.5 V to V_{INmin} in 30 µs and V_{IN} = V_{INmin} to V_{INmin} + 0.5 V in 30 µs, I_{OUT} = I_{OUTmax} / 2			0.2	1	mV
Turnon time	V_{OUT} = (1 to 1.8 V), at I_{OUT} = 0 measured from V_{OUT} = 0.1 V up to 97% of V_{OUT}		30		150	µs
	V_{OUT} = (1.9 to 3.3 V), at I_{OUT} = 0 measured from V_{OUT} = 0.1 V up to 97% of V_{OUT}		50		200	
Ripple rejection	V_{IN} = V_{INDC} + 100 mV_{pp} tone, V_{INDC+}= 3.8 V, I_{OUT} = I_{OUTmax} / 2	*f* = 217 Hz		70		dB
		f = 50 kHz		40		
LDO4 internal resistance	LDO off			500		kΩ
Ground current	On mode, I_{OUT} = 0			55	65	µA
	On mode, I_{OUT} = I_{OUTmax}				900	
	Low-power mode			14	17	
	Off mode				1	

(1) Set DCDCCTRL_REG.TRACK=1 and disable VDD1 to achieve V_{OUT} < 1 V.

Copyright © 2010–2018, Texas Instruments Incorporated

5.19 Electrical Characteristics: LDO5

Over operating free-air temperature range (unless otherwise noted)

PARAMETER	TEST CONDITIONS		MIN	TYP	MAX	UNIT
Input voltage on VCC4 (V_{IN})	V_{OUT} (LDO5) = 1.8 V		2.7		5.5	V
	V_{OUT} (LDO5) = 2.5 V		3.2		5.5	
	V_{OUT} (LDO5) = 2.8 V at I_{load} = 200 mA		3.2		5.5	
	V_{OUT} (VAUX2) = 2.8 V at 300 mA		3.2		5.5	
LDO5						
DC output voltage (V_{OUT})	On and low-power mode, V_{OUT} = 1.0 V to 3.3 V, V_{IN} = V_{INmin} to V_{INmax}	SEL[6:2] = 00010		1		V
		SEL[6:2] = 00011		1.1		
		...	–3%	...	3%	
		SEL[6:2] = 11000		3.2		
		SEL[6:2] = 11001		3.3		
Rated output current (I_{OUTmax})	On mode		300			mA
	Low-power mode		1			
Load current limitation (short-circuit protection)	On mode, V_{OUT} = V_{OUTmin} – 100 mV		450	550	650	mA
Dropout voltage (V_{DO})	On mode, V_{DO} = V_{IN} – V_{OUT}	V_{IN} = 2.7 V, I_{OUT} = I_{OUTmax}			500	mV
		V_{IN} = 2.7 V, I_{OUT} = 250 mA			400	
		V_{IN} = 2.7 V, I_{OUT} = 200 mA			300	
DC load regulation	On mode, I_{OUT} = I_{OUTmax} to 0				15	mV
DC line regulation	On mode, V_{IN} = V_{INmin} to V_{INmax} at I_{OUTmax}				4	mV
Transient load regulation	On mode, V_{IN} = 3.2 V, V_{OUTtyp} = 2.8 V I_{OUT} = 0.1 × I_{OUTmax} to 0.9 × I_{OUTmax} in 5 µs and I_{OUT} = 0.9 × I_{OUTmax} to 0.1 × I_{OUTmax} in 5 µs			16	30	mV
Transient line regulation	On mode, V_{IN} = V_{INmin} + 0.5 V to V_{INmin} in 30 µs and V_{IN} = V_{INmin} to V_{INmin} + 0.5 V in 30 µs, I_{OUT} = I_{OUTmax}			4	12	mV
Turnon time	V_{OUT} = (1 to 1.8 V), at I_{OUT} = 0 measured from V_{OUT} = 0.1 V up to 97% of V_{OUT}		30		150	µs
	V_{OUT} = (1.9 to 3.3 V), at I_{OUT} = 0 measured from V_{OUT} = 0.1 V up to 97% of V_{OUT}		50		200	
Turnon inrush current				200	450	mA
Ripple rejection	V_{IN} = V_{INDC} + 100 mV_{pp} tone, V_{INDC+} = 3.8 V, I_{OUT} = I_{OUTmax} / 2	f = 217 Hz		70		dB
		f = 20 kHz		40		
LDO5 internal resistance	LDO Off			60		Ω
Ground current	On mode, I_{OUT} = 0			65	76	µA
	On mode, I_{OUT} = I_{OUTmax}				2000	
	Low-power mode			14	22	
	Off mode				1	

5.20 Electrical Characteristics: LDO6, LDO7, and LDO8

Over operating free-air temperature range (unless otherwise noted)

PARAMETER	TEST CONDITIONS		MIN	TYP	MAX	UNIT
Input voltage on VCC3 (V_{IN})	V_{OUT} (LDO6) = 1.2 V at 150 mA, V_{OUT} (LDO7) = 1.1 V at 150 mA and (VLDO8) = 1 V at 180 mA		1.7		5.5	V
	V_{OUT} (LDO7) = 1.8 V or 2 V and V_{OUT} (LDO6) = 1.8 V		2.7		5.5	
	V_{OUT} (LDO7) = 2.8 V		3.2		5.5	
	V_{OUT} (LDO7) = 3.3 V		3.6		5.5	
	V_{OUT} (LDO7) = 2.8 V at 250 mA		3.2		5.5	
	V_{OUT} (LDO7) = 3.0 V		3.6		5.5	
	V_{OUT} (LDO7) = 3.3 V at 250 mA		3.6		5.5	
LDO6						
DC Output voltage (V_{OUT})	On and low-power mode, V_{IN} = V_{INmin} to V_{INmax}	SEL[6:2] = 00010		1		V
		SEL[6:2] = 00011		1.1		
		...	–3%	...	3%	
		SEL[6:2] = 11000		3.2		
		SEL[6:2] = 11001		3.3		
Rated output current (I_{OUTmax})	On mode		300			mA
	Low-power mode		1			
Load current limitation (short-circuit protection)	On mode, V_{OUT} = V_{OUTmin} – 100 mV		450	550	650	mA
Dropout voltage (V_{DO})	On mode, V_{DO} = V_{IN} – V_{OUT}	V_{IN} = 2.7 V, I_{OUT} = I_{OUTmax}			500	mV
		V_{IN} = 2.7 V, I_{OUT} = 250 mA			400	
		V_{IN} = 2.7 V, I_{OUT} = 200 mA			300	
		V_{IN} = 1.7 V, I_{OUT} = 180 mA			700	
		V_{IN} = 1.7 V, I_{OUT} = 150 mA			500	
		V_{IN} = 1.7 V, I_{OUT} = 100 mA			300	
DC load regulation	On mode, I_{OUT} = I_{OUTmin} to 0				15	mV
DC line regulation	On mode, V_{IN} = V_{INmin} to V_{INmax} at I_{OUT} = I_{OUTmax}				4	mV
Transient load regulation	On mode, V_{IN} = 3.2 V, V_{OUTtyp} = 2.8 V I_{OUT} = 0.1 × I_{OUTmax} to 0.9 × I_{OUTmax} in 5 µs and I_{OUT} = 0.9 × I_{OUTmax} to 0.1 × I_{OUTmax} in 5 µs			20	32	mV
Transient line regulation	On mode, V_{IN} = 2.7 V + 0.5 V to 2.7 V in 30 µs and V_{IN} = 2.7 V to 2.7 V + 0.5 V in 30 µs, I_{OUT} = I_{OUTmax}			5	15	mV
Turnon time	V_{OUT} = (1 to 1.8 V), at I_{OUT} = 0 measured from V_{OUT} = 0.1 V up to 97% of V_{OUT}		30		150	µs
	V_{OUT} = (1.9 to 3.3 V), at I_{OUT} = 0 measured from V_{OUT} = 0.1 V up to 97% of V_{OUT}		50		200	
Turnon inrush current				200	450	mA
Ripple rejection	V_{IN} = V_{INDC} + 100 mV_{pp} tone, V_{INDC+} = 3.8 V, I_{OUT} = I_{OUTmax} / 2	f = 217 Hz		70		dB
		f = 20 kHz		40		
LDO6 internal resistance	LDO off			60		Ω
Ground current	On mode, I_{OUT} = 0			65	76	µA
	On mode, I_{OUT} = I_{OUTmax}				2000	
	Low-power mode			14	22	
	Off mode				1	

Copyright © 2010–2018, Texas Instruments Incorporated

Electrical Characteristics: LDO6, LDO7, and LDO8 *(continued)*

Over operating free-air temperature range (unless otherwise noted)

PARAMETER	TEST CONDITIONS		MIN	TYP	MAX	UNIT
LDO7						
DC output voltage (V_{OUT})	On and low-power mode, V_{IN} = V_{INmin} to V_{INmax}	SEL[6:2] = 00010		1		V
		SEL[6:2] = 00011		1.1		
		...	–3%	...	3%	
		SEL[6:2] = 11000		3.2		
		SEL[6:2] = 11001		3.3		
Rated output current (I_{OUTmax})	On mode		300			mA
	Low-power mode		1			
Load current limitation (short-circuit protection)	On mode, V_{OUT} = V_{OUTmin} – 100 mV		450	550	650	mA
Dropout voltage (V_{DO})	On mode, V_{DO} = V_{IN} – V_{OUT}	V_{IN} = 2.7 V, I_{OUT} = I_{OUTmax}			500	mV
		V_{IN} = 2.7 V, I_{OUT} = 250 mA			400	
		V_{IN} = 2.7 V, I_{OUT} = 200 mA			300	
		V_{IN} = 1.7 V, I_{OUT} = 180 mA			700	
		V_{IN} = 1.7 V, I_{OUT} = 150 mA			500	
		V_{IN} = 1.7 V, I_{OUT} = 100 mA			300	
DC load regulation	On mode, I_{OUT} = I_{OUTmax} to 0				15	mV
DC line regulation	On mode, V_{IN} = V_{INmin} to V_{INmax} at I_{OUT} = I_{OUTmax}				4	mV
Transient load regulation	On mode, V_{IN} = 3.6 V, V_{OUTtyp} = 3.3 V I_{OUT} = 0.1 × I_{OUTmax} to 0.9 × I_{OUTmax} in 5 µs and I_{OUT} = 0.9 × I_{OUTmax} to 0.1 × I_{OUTmax} in 5 µs			16	25	mV
Transient line regulation	On mode, I_{OUT} = I_{OUTmax} / 2, V_{IN} = 2.7 + 0.5 V to 2.7 in 30 µs and V_{IN} = 2.7 V + 0.5 V in 30 µs, I_{OUT} = I_{OUTmax} / 2			5	15	mV
Turnon time	V_{OUT} = (1 to 1.8 V), at I_{OUT} = 0 measured from V_{OUT} = 0.1 V up to 97% of V_{OUT}		30		150	µs
	V_{OUT} = (1.9 to 3.3 V), at I_{OUT} = 0 measured from V_{OUT} = 0.1 V up to 97% of V_{OUT}		50		200	
Turnon inrush current				200	450	mA
Ripple rejection	V_{IN} = V_{INDC} + 100 mV_{pp} tone, V_{INDC+} = 3.8 V, I_{OUT} = I_{OUTmax} / 2	*f* = 217 Hz		70		dB
		f = 20 kHz		40		
LDO7 internal resistance	LDO off			60		Ω
Ground current	On mode, I_{OUT} = 0			65	76	µA
	On mode, I_{OUT} = I_{OUTmax}				2000	
	Low-power mode			14	22	
	Off mode				1	

Electrical Characteristics: LDO6, LDO7, and LDO8 *(continued)*

Over operating free-air temperature range (unless otherwise noted)

PARAMETER	TEST CONDITIONS		MIN	TYP	MAX	UNIT
LDO8						
DC output voltage (V_{OUT})	On and low-power mode, V_{IN} = V_{INmin} to V_{INmax}	SEL[6:2] = 00010		1		V
		SEL[6:2] = 00011		1.1		
		...	–3%	...	3%	
		SEL[6:2] = 11000		3.2		
		SEL[6:2] = 11001		3.3		
Rated output current (I_{OUTmax})	On mode		300			mA
	Low-power mode		1			
Load current limitation (short-circuit protection)	On mode, V_{OUT} = V_{OUTmin} – 100 mV		450	550	650	mA
Dropout voltage (V_{DO})	On mode, V_{DO} = V_{IN} – V_{OUT},	V_{IN} = 2.7 V, I_{OUT} = I_{OUTmax}			500	mV
		V_{IN} = 2.7 V, I_{OUT} = 250 mA			400	
		V_{IN} = 2.7 V, I_{OUT} = 200 mA			300	
		V_{IN} = 1.7 V, I_{OUT} = 180 mA			700	
		V_{IN} = 1.7 V, I_{OUT} = 150 mA			500	
		V_{IN} = 1.7 V, I_{OUT} = 100 mA			300	
DC load regulation	On mode, I_{OUT} = I_{OUTmax} to 0				15	mV
DC line regulation	On mode, V_{IN} = V_{INmin} to V_{INmax} at I_{OUT} = I_{OUTmax}				4	mV
Transient load regulation	On mode, V_{IN} = 1.7 V, V_{OUTtyp} = 1.2 V I_{OUT} = 10 mA to 90 mA in 5 µs and I_{OUT} = 90 mA to 10 mA in 5 µs			7	30	mV
Transient line regulation	On mode, I_{OUT} = 100 mA, V_{IN} = 2.7 V + 0.2 V to 2.7 V in 30 µs and V_{IN} = 2.7 V to 2.7 v + 0.2 V in 30 µs, I_{OUT} = 100 mA			5	15	mV
Turnon time	V_{OUT} = (1 to 1.8 V), at I_{OUT} = 0 measured from V_{OUT} = 0.1 V up to 97% of V_{OUT}		30		150	µs
	V_{OUT} = (1.9 to 3.3 V), at I_{OUT} = 0 measured from V_{OUT} = 0.1 V up to 97% of V_{OUT}		50		200	
Turnon inrush current				200	450	mA
Ripple rejection	V_{IN} = V_{INDC} + 100 mV_{pp} tone, V_{INDC+} = 3.8 V, I_{OUT} = I_{OUTmax} / 2	f = 217 Hz		70		dB
		f = 20 kHz		40		
LDO8 internal resistance	LDO off			60		Ω
Ground current	On mode, I_{OUT} = 0			65	76	µA
	On mode, I_{OUT} = I_{OUTmax}				2000	
	Low-power mode			14	22	
	Off mode				1	

Copyright © 2010–2018, Texas Instruments Incorporated

5.21 Timing and Switching Characteristics

5.21.1 I²C Timing and Switching

In Table 5-1, SDA is the SDA_SDI or EN2 signal and SCL is the SCL_SCK or EN1 signal. The input timing requirements are given by considering a rising or falling time of 80 ns in high–speed mode (3.4 Mbps), 300 ns in fast–speed mode (400 kbps), 1000 ns in standard mode (100 kbps). Values are over the operating free-air temperature range unless otherwise noted.

Table 5-1. Timing Requirements: I²C Interface and Control Signals

NO.				MIN	NOM	MAX	UNIT
		INT1 rise and fall times	C_L = 5 to 35 pF	5	10		ns
		NRESPWRON rise and fall times	C_L = 5 to 35 pF	5	10		ns
SLAVE HIGH–SPEED MODE							
		SCL/EN1 and SDA/EN2 rise and fall time	C_L = 10 to 100 pF	10	80		ns
		Data rate			3.4		Mbps
I3	$t_{su(SDA-SCLH)}$	Setup time, SDA valid to SCL high		10			ns
I4	$t_{h(SCLL-SDA)}$	Hold time, SDA valid from SCL low		0	70		ns
I7	$t_{su(SCLH-SDAL)}$	Setup time, SCL high to SDA low		160			ns
I8	$t_{h(SDAL-SCLL)}$	Hold time, SCL low from SDA low		160			ns
I9	$t_{su(SDAH-SCLH)}$	Setup time, SDA high to SCL high		160			ns
SLAVE FAST MODE							
		SCL/EN1 and SDA/EN2 rise and fall time	C_L = 10 to 400 pF	20 + 0.1 × C_L	250		ns
		Data rate			400		Kbps
I3	$t_{su(SDA-SCLH)}$	Setup time, SDA valid to SCL high		100			ns
I4	$t_{h(SCLL-SDA)}$	Hold time, SDA valid from SCL low		0	0.9		µs
I7	$t_{su(SCLH-SDAL)}$	Setup time, SCL high to SDA low		0.6			µs
I8	$t_{h(SDAL-SCLL)}$	Hold time, SCL low from SDA low		0.6			µs
I9	$t_{su(SDAH-SCLH)}$	Setup time, SDA high to SCL high		0.6			µs
SLAVE STANDARD MODE							
		SCL/EN1 and SDA/EN2 rise and fall time	C_L = 10 to 400 pF		250		ns
		Data rate			100		Kbps
I3	$t_{su(SDA-SCLH)}$	Setup time, SDA valid to SCL high		250			ns
I4	$t_{h(SCLL-SDA)}$	Hold time, SDA valid from SCL low		0			µs
I7	$t_{su(SCLH-SDAL)}$	Setup time, SCL high to SDA low		4.7			µs
I8	$t_{h(SDAL-SCLL)}$	Hold time, SCL low from SDA low		4			µs
I9	$t_{su(SDAH-SCLH)}$	Setup time, SDA high to SCL high		4			µs

Copyright © 2010–2018, Texas Instruments Incorporated

In Table 5-2, SCL is the SCL_SCK or EN1 signal. The input timing requirements are given by considering a rising or falling time of 80 ns in high–speed mode (3.4 Mbps), 300 ns in fast–speed mode (400 kbps), 1000 ns in standard mode (100 kbps). Values are over the operating free-air temperature range unless otherwise noted.

Table 5-2. Switching Characteristics: I²C Interface and Control Signals

NO.	PARAMETER		TEST CONDITIONS	MIN	TYP	MAX	UNIT
SLAVE HIGH–SPEED MODE							
I1	$t_{w(SCLL)}$	Pulse duration, SCL low		160			ns
I2	$t_{w(SCLH)}$	Pulse duration, SCL high		60			ns
SLAVE FAST MODE							
I1	$t_{w(SCLL)}$	Pulse duration, SCL low		1.3			µs
I2	$t_{w(SCLH)}$	Pulse duration, SCL high		0.6			µs
SLAVE STANDARD MODE							
I1	$t_{w(SCLL)}$	Pulse duration, SCL low		4.7			µs
I2	$t_{w(SCLH)}$	Pulse duration, SCL high		4			µs

Copyright © 2010–2018, Texas Instruments Incorporated

5.21.2 Switch-ON and Switch-OFF Sequences and Timing

This section describes an example boot sequence. Each TPS65911x device supports a dedicated EEPROM boot sequence to match specific processor requirements. Fixed boot mode is the same in all TPS65911x devices. Boot mode selection is described in Section 6.5.2.

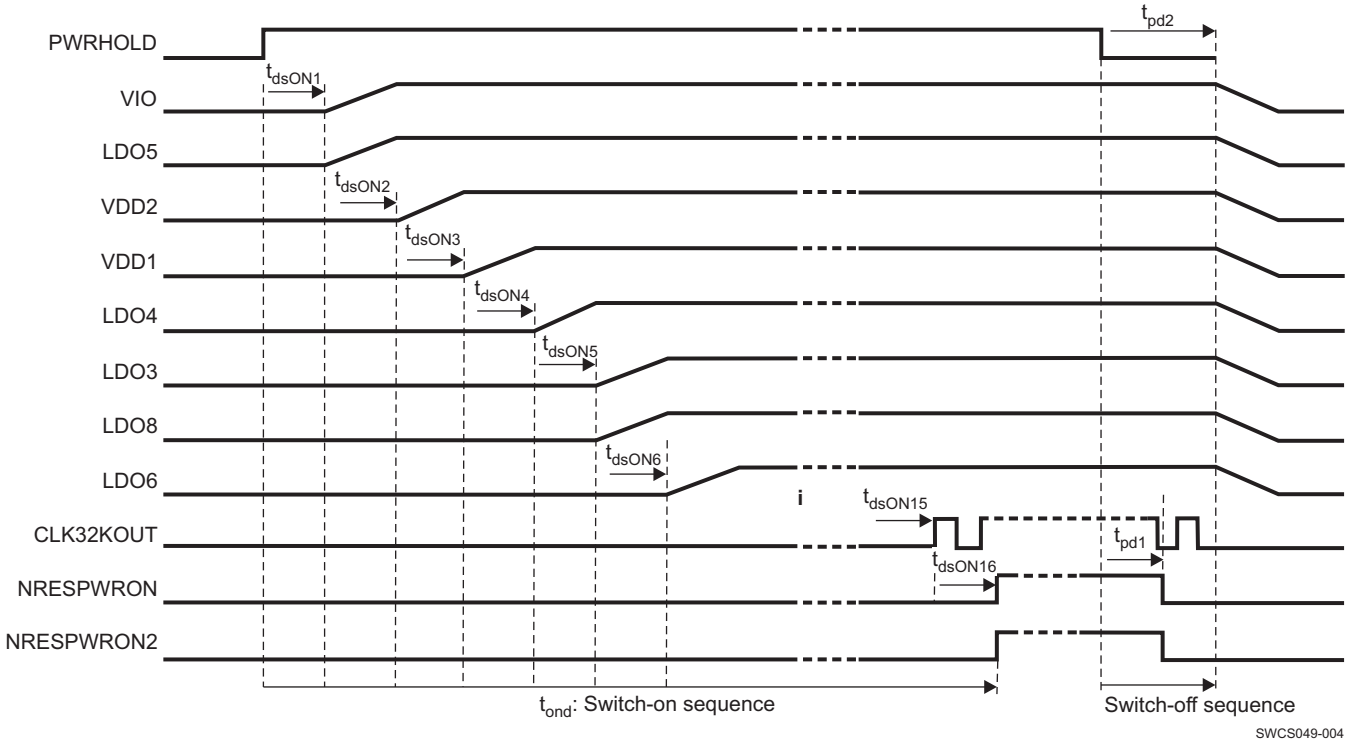

NOTE: Figure 5-1 is for illustrative purposes only and does not describe any actual TPS65911x part number.

Figure 5-1. Boot Sequence Example With 2-ms Time Slot and Simultaneous Switch-Off of Resources

Table 5-3. Switching Characteristics for Boot Sequence Example

PARAMETER		TEST CONDITIONS	MIN	TYP	MAX	UNIT
t_{dsON1}	PWRHOLD rising edge to VIO	LDO5 enable delay		66 × t_{CK32k} = 2060		µs
t_{dsON2}	VIO to VDD2 enable delay			64 × t_{CK32k} = 2000		µs
t_{dsON3}	VDD2 to VDD1 enable delay			64 × t_{CK32k} = 2000		µs
t_{dsON4}	VDD1 to LDO4 enable delay			64 × t_{CK32k} = 2000		µs
t_{dsON5}	LDO4 to LDO3, LDO8 enable delay			64 × t_{CK32k} = 2000		µs
t_{dsON6}	LDO3 to LDO6 enable delay			64 × t_{CK32k} = 2000		µs
t_{dsON7}	LDO6 to CLK32KOUT rising-edge delay			9 × 64 × t_{CK32k} = 18000		µs
t_{dsON16}	CLK32KOUT to NRESPWON	NRESPWON2 rising-edge delay		64 × t_{CK32k} = 2000		µs
t_{dsONT}	Total switch-on delay			32		ms
t_{pd1}	PWRHOLD falling edge to NRESPWON	NRESPWON2 falling-edge delay		2 × t_{CK32k} = 62.5		µs

Table 5-3. Switching Characteristics for Boot Sequence Example (continued)

PARAMETER		TEST CONDITIONS	MIN	TYP	MAX	UNIT
t_{pd1b}	NRESPWON falling edge to CLK32KOUT low delay			$3 \times t_{CK32k}$ = 92		µs
t_{pd2}	PWRHOLD falling edge to supplies and reference disable delay			$5 \times t_{CK32k}$ = 154		µs

5.21.3 Power Control Timing

5.21.3.1 Device State Control Through PWRON Signal

Figure 5-2 shows the device state control through PWRON signal.

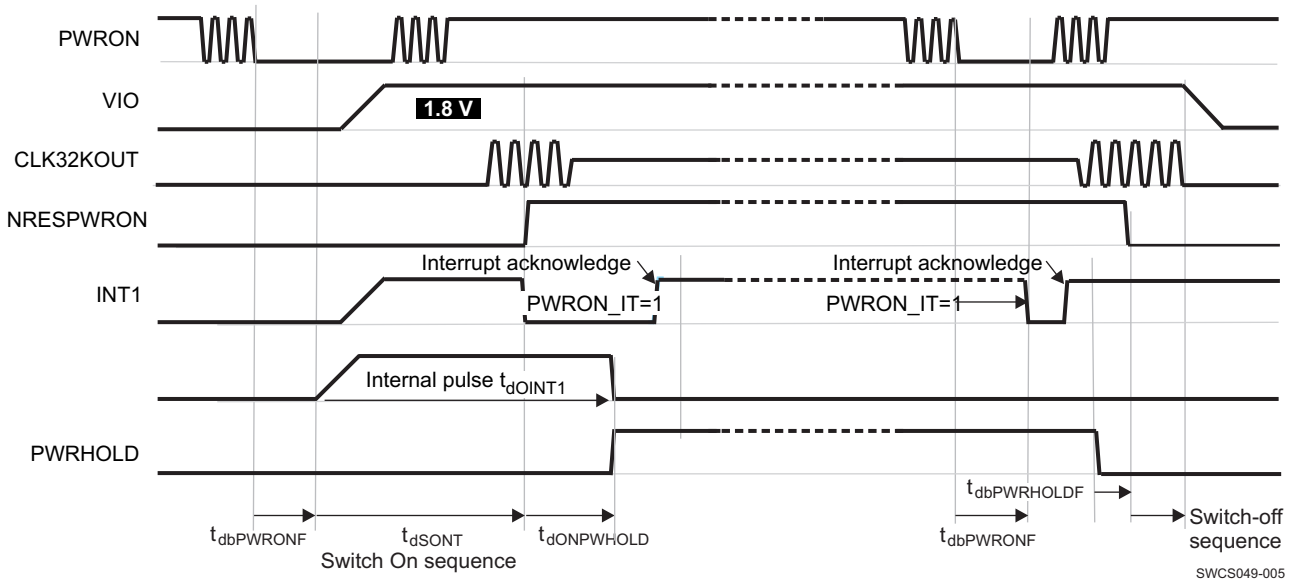

A. The DEV_ON or AUTODEV_ON control bits can be used instead of the PWRHOLD signal to maintain supplies on after a switch-on sequence.
B. The internal POWER ON enable condition pulse, t_{dOINT1}, keeps device active until a PWRHOLD acknowledge.
C. Switch-off from PWRHOLD removal.

Figure 5-2. Device State Control Through PWRON Signal

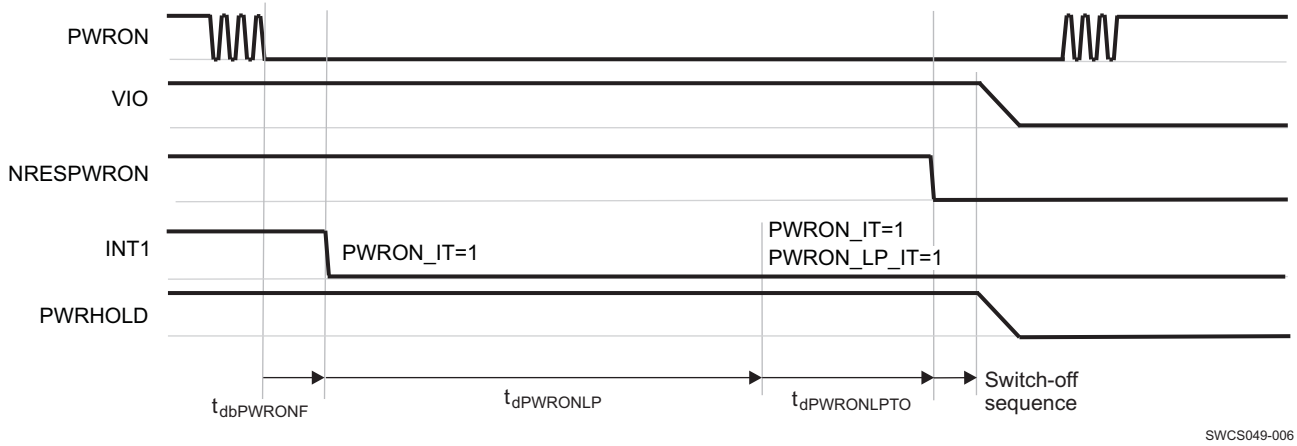

Figure 5-3. PWRON Long-Press Turnoff

Copyright © 2010–2018, Texas Instruments Incorporated

Table 5-4 lists the power control timing characteristics.

Table 5-4. Power Control Timing Characteristics

PARAMETER		TEST CONDITIONS	MIN	TYP	MAX	UNIT
$t_{dbPWRONF}$	PWRON falling-edge debouncing delay			100		ms
$t_{dbPWRONR}$	PWRON rising-edge debouncing delay			$3 \times t_{CK32k}$ = 94		µs
$t_{dbPWRHOLD}$	PWRHOLD rising-edge debouncing delay			$2 \times t_{CK32k}$ = 63		µs
t_{dOINT1}	INT1 (internal) power-on pulse duration after PWRON low-level (debounced) event			1		s
$t_{dONPWHOLD}$	Delay to set high PWRHOLD signal or DEV_ON control bit after NRESPWON released to keep on the supplies			$t_{dOINT1} - t_{DSONT}$ = 970 (1)		ms
$t_{dPWRONLP}$	PWRON long-press delay	PWRON falling-edge to PWRON_LP_IT		4		s
$t_{dPWRONLPTO}$	PWROW long-press interrupt (PWRON_LP_IT) to supplies switch-off	PWRON_LP_IT to NRESPWRON falling-edge		1		s

(1) T_{dSONT} = 30 ms, as in example boot sequence.

5.21.3.2 Device SLEEP State Control

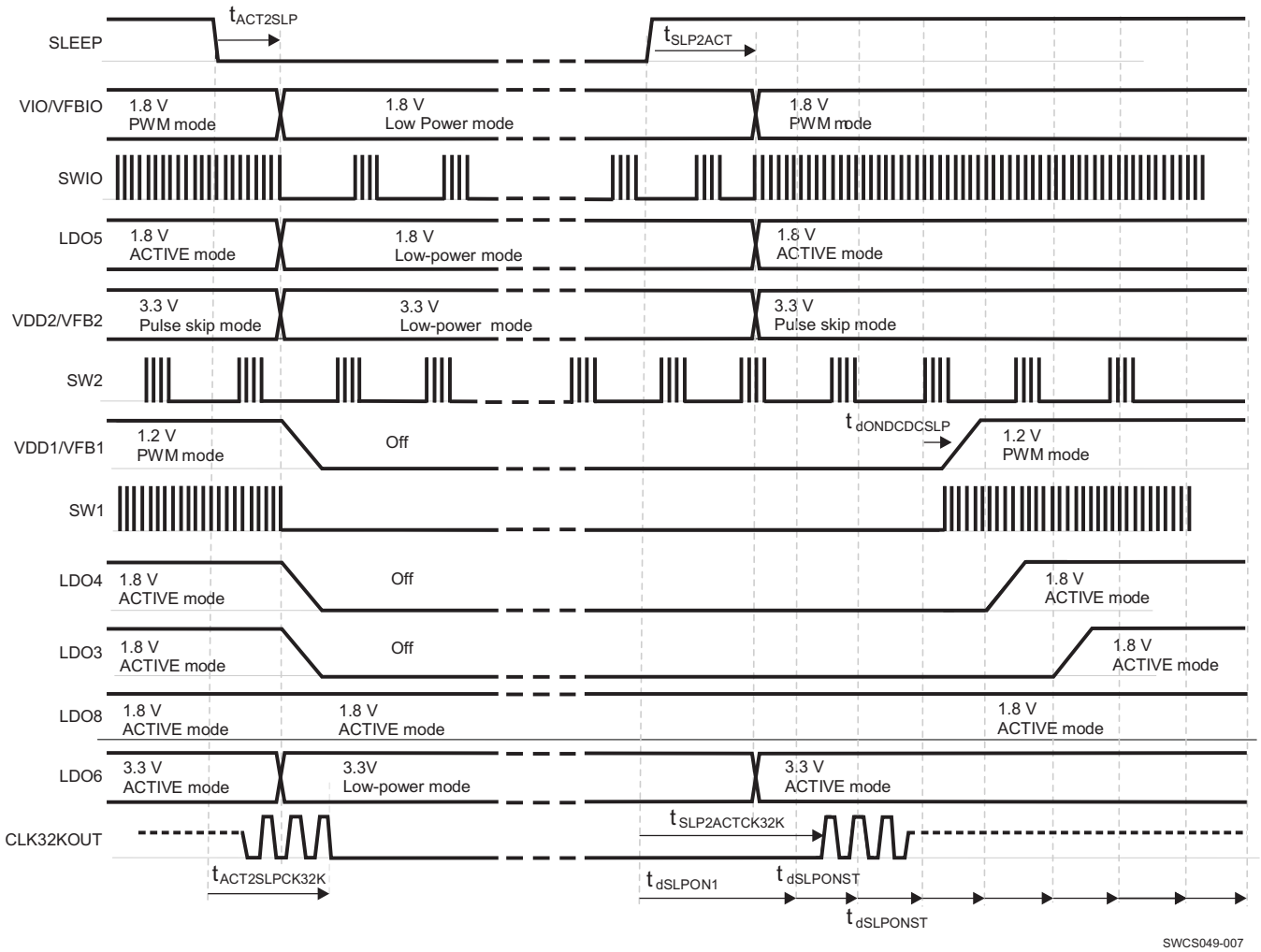

NOTE: Register programming: VIO_PSKIP = 0, VDD1_PSKIP = 0, VDD1_SETOFF = 1, LDO3_SETOFF = 1, LDO4_SETOFF = 1, LDO8_KEEPON = 1.

Figure 5-4. Device SLEEP State Control

Table 5-5. Device SLEEP State Control Timing Characteristics

PARAMETER		TEST CONDITIONS	MIN	TYP	MAX	UNIT
$t_{ACT2SLP}$	SLEEP falling-edge to supply	Low-power mode (SLEEP resynchronization delay)	2 × t_{CK32k} = 62		3 × t_{CK32k} = 94	µs
$t_{ACT2SLPCK32K}$	SLEEP falling-edge to CLK32KOUT low		156	$t_{ACT2SLP}$ + 3 × t_{CK32k}	188	µs
$t_{SLP2ACT}$	SLEEP rising edge to supply	High-power mode	8 × t_{CK32k} = 250		9 × t_{CK32k} = 281	µs
$t_{SLP2ACTCK32K}$	SLEEP rising edge to CLK32KOUT running		344	$t_{SLP2ACT}$ + 3 × t_{CK32k}	375	µs
$t_{dSLPON1}$	SLEEP rising edge to time step 1 of the turnon sequence from SLEEP state		281	$t_{SLP2ACT}$ + 1 × t_{CK32k}	312	µs

Copyright © 2010–2018, Texas Instruments Incorporated

Table 5-5. Device SLEEP State Control Timing Characteristics (continued)

PARAMETER		TEST CONDITIONS		MIN	TYP	MAX	UNIT
$t_{dSLPONST}$	Turnon sequence step duration	From SLEEP state	TSLOT_LENGTH[1:0] = 00		0		µs
			TSLOT_LENGTH[1:0] = 01		200		
			TSLOT_LENGTH[1:0] = 10		500		
			TSLOT_LENGTH[1:0] = 11		2000		
$t_{dSLPONDCDC}$	VDD1, VDD2, or VIO turnon delay	From turnon sequence time step			$2 \times t_{CK32k}$ = 62		µs

5.21.3.3 Device Turnon and Turnoff With Rising and Falling Input Voltage

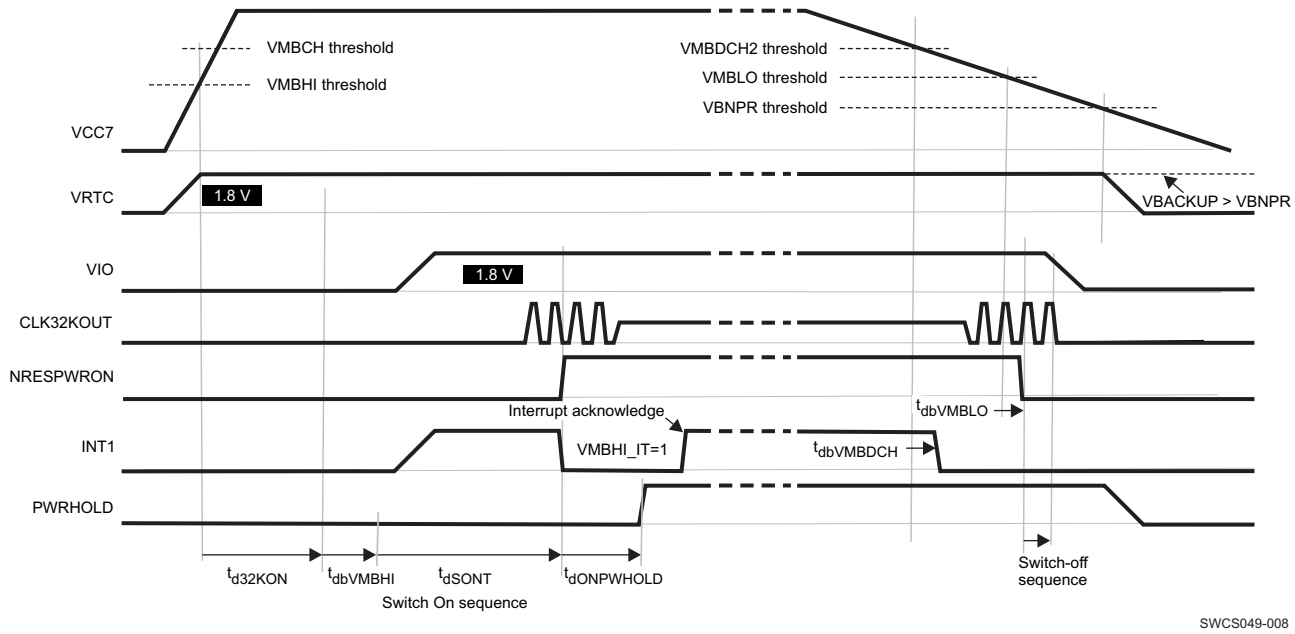

A. To allow power-up from first supply insertion as shown here, VMBHI_IT_MSK is set to 0.
B. Power-up to active state is enabled when VMBHI interrupt is not masked (VMBHI_IT_MSK in boot configuration).
C. The DEV_ON or AUTODEV_ON control bits can be used instead of the PWRHOLD signal to maintain supplies on after a switch-on sequence.

Figure 5-5. Device Turnon and Turnoff With Rising and Falling Input Voltage

Table 5-6. Device Turnon Voltage With Rising Input Voltage, Timing Characteristics

			MIN	NOM	MAX	UNIT
t_{d32KON}	32-kHz oscillator turnon time	RC oscillator		0.1		ms
		Quartz oscillator		200		
		Bypass clock		0.1		
$t_{dbVMBHI}$	VMBHI rising-edge debouncing delay		$3 \times t_{CK32k} = 94$		$4 \times t_{CK32k} = 125$	µs
t_{dOINT1}	INT1 power on pulse duration after VMBHI high level (debounced) event			1		s
$t_{dONPWHOLD}$	Delay to set high PWRHOLD signal or DEV_ON control bit after NRESPWRON released in order to keep on the supplies			$t_{dOINT1} - t_{DSONT} = 970$		ms
$t_{dbVMBDCH}$	Main battery voltage = VMBDCH threshold to INT1 falling-edge delay		$3 \times t_{CK32k} = 94$		$4 \times t_{CK32k} = 125$	s
$t_{dbVMBLO}$	Main battery voltage = VMBLO threshold to NRESPWRON falling-edge delay		$3 \times t_{CK32k} = 94$		$4 \times t_{CK32k} = 125$	s

Copyright © 2010–2018, Texas Instruments Incorporated

5.21.3.4 Power Supplies State Control Through EN1 and EN2 Signals

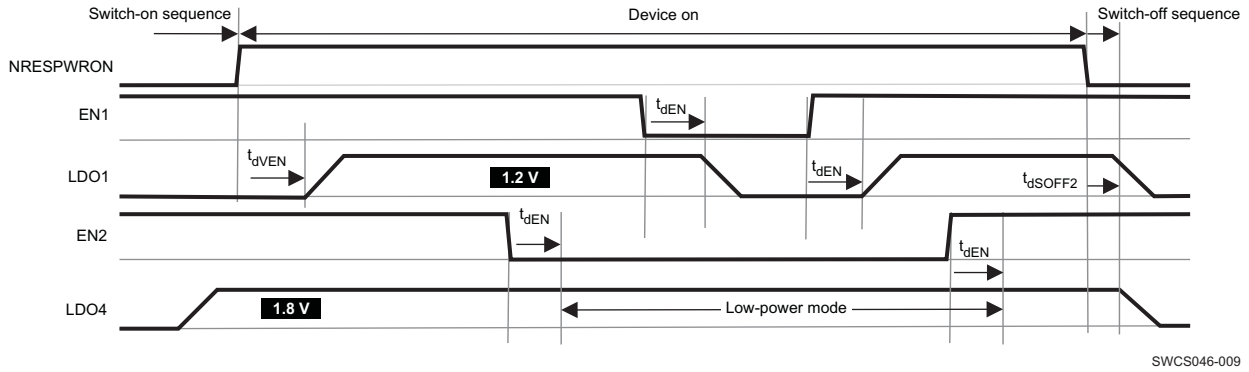

NOTE: Register setting: LDO1_EN1 = 1, LDO4_EN2 = 1, and LDO4_KEEPON = 1.

Figure 5-6. LDO Type Supplies State Control Through EN1 and EN2

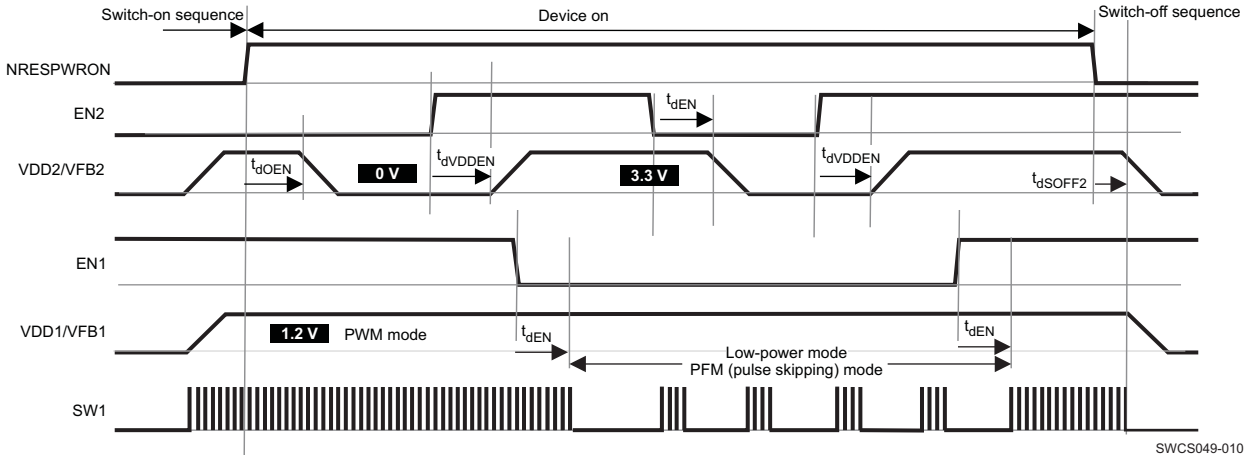

NOTE: Register setting: VDD2_EN2 = 1, VDD1_EN1 = 1, VDD1_KEEPON = 1, VDD1_PSKIP = 0, and SEL[6:0] = hex00 in VDD2_SR_REG.

Figure 5-7. VDD1 and VDD2 Supplies State Control Through EN1 and EN2

Table 5-7. Supplies State Control Through EN1 and EN2 Timing Characteristics

		MIN	NOM	MAX	UNIT
t_{dEN}	NRESPWRON to supply state change delay, EN1 or EN2 driven		0		ms
t_{dOEN}	EN1 or EN2 edge to supply state change delay		$1 \times t_{CK32k}$ = 31		µs
t_{dVDDEN}	EN1 or EN2 edge to VDD1 or VDD2 DCDC turnon delay		$3 \times t_{CK32k}$ = 63		µs

5.21.3.5 VDD1, VDD2 Voltage Control Through EN1 and EN2 Signals

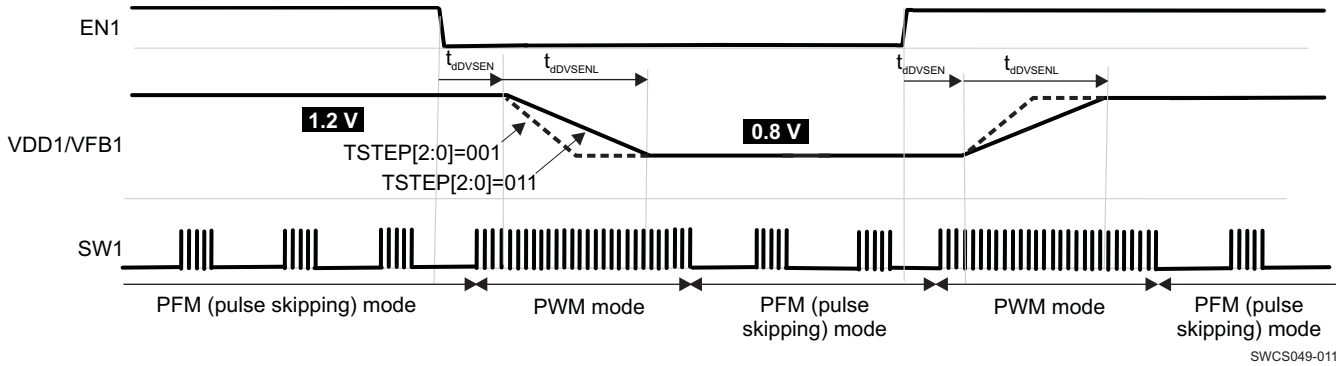

NOTE: Register setting: VDD1_EN1 = 1, SEL[6:0] = hex13 in VDD1_SR_REG

Figure 5-8. VDD1 Supply Voltage Control Through EN1

Table 5-8. VDD1 Supply Voltage Control Through EN1 Timing Characteristics

PARAMETER		TEST CONDITIONS	MIN	TYP	MAX	UNIT
t_{dDVSEN}	EN1 (or EN2) edge to VDD1 (or VDD2) voltage change delay			$2 \times t_{CK32k}$ = 62		µs
$t_{dDVSENL}$	VDD1 (or VDD2) voltage settling delay	TSTEP[2:0] = 001		32		µs
		TSTEP[2:0] = 011 (default)		0.4 / 7.5 = 53		
		TSTEP[2:0] = 111		160		

Copyright © 2010–2018, Texas Instruments Incorporated

6 Detailed Description

6.1 Overview

The TPS65911 device is an integrated power management IC (PMIC) available in a 98-pin 0.65-mm pitch BGA package. It is designed for applications powered by powered by one Li-Ion or Li-Ion polymer battery cell, 3-series Ni-MH cells, or a 5-V input supply. It provides three step-down converters, one step-down controller with external FETs to support high current rails, eight LDOs, nine GPIOs, and EERPOM-programmable power sequencing to support a variety of processors and system sequencing requirements.

Two of the step-down converters, VDD1 and VDD2, provide power for processor cores and support dynamic voltage scaling using I2C interface. VDD1 and VDD2 have an output voltage range of 0.6 V to 3.3V. The converters have a 12.5-mV step size from 0.6 V to 1.5 V, and a VGAIN_SEL option to multiply this voltage by 2 or 3, with 3.3 V maximum output voltage. The third converter, VIO, provides power for I/O and memory. VIO has four selectable voltage outputs, 1.5 V, 1.8 V, 2.5 V, and 3.3 V.

The device includes 8 general-purpose LDOs with an output voltage range from 1 V to 3.3 V. Three of the LDOs (LDO1, LDO2, and LDO4) support 50-mV output voltage steps, and the remaining five LDOs (LDO3, LDO5, LDO6, LDO7, and LDO8) support 100-mV output voltage steps. The LDO voltages and other configuration are controlled by the I2C interface.

The power-up and power-down sequences are controlled by the embedded power controller and is pre-programmed using EEPROM. The power-up and power-down sequences assign each output rail to a sequence slot, and the delay time between slots is either 0.5 ms or 2 ms.

The device offers nine GPIOs. Four of the GPIOs (GPIO0, GPIO2, GPIO6, and GPIO7) can be configured to enable external resources, and can be included in the power sequences. The device also includes dedicated input and reset pins used to enable and disable the PMIC including PWRON, PWRHOLD, HDRST, and PWRDN. The NRESPWRON pin is a dedicated power-on reset output for a processor powered by the PMIC.

Copyright © 2010–2018, Texas Instruments Incorporated

6.2 Functional Block Diagram

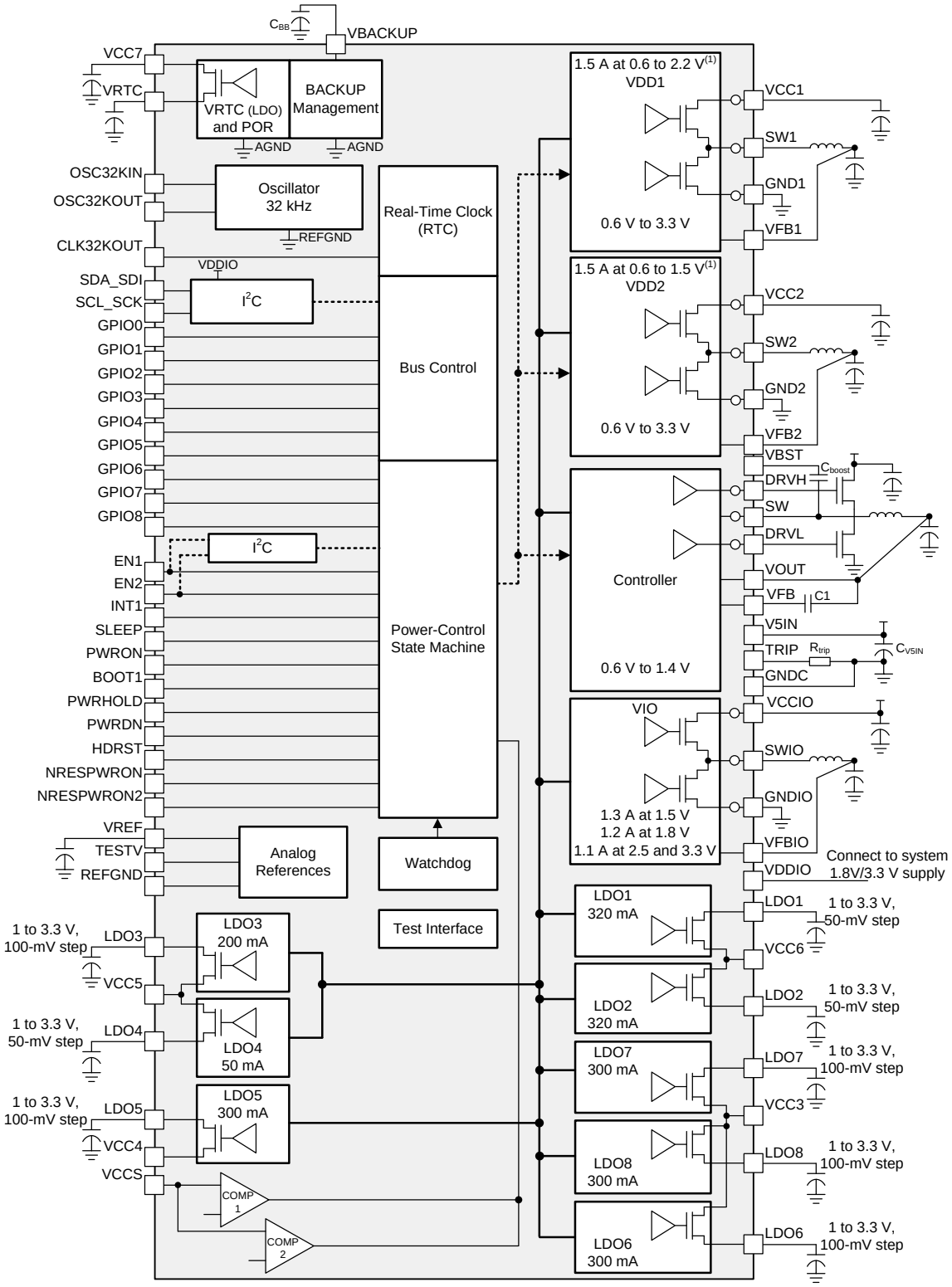

(1) For details on supported levels, see Section 5.14, Section 5.15, and Table 6-1.

Copyright © 2010–2018, Texas Instruments Incorporated

6.3 Power Reference

The band-gap voltage reference is filtered by using an external capacitor connected across the VREF output and the analog ground REFGND (see Section 5.3). The VREF voltage is distributed and buffered inside the device.

6.4 Power Resources

The power resources provided by the TPS65911 device include inductor based switched mode power supplies (SMPSs) and linear low-dropout voltage regulators (LDOs). These supply resources provide the required power to the external processor cores and external components, and to modules embedded in the TPS65911 device.

Two of the integrated SMPSs and the external FET SMPS have voltage scaling capability. These SMPSs provide independent core voltage domains to the host processor. When changing the output voltage, VDD1 and VDD2 reach the new value through successive steps of 2.5 to 12.5 mV. The size of the voltage step is selected by the TSTEP bit. VDDCtrl has a target slew rate of 100 mV/20 µs. New output values are reached in successive smaller steps of N × LSB, LSB = 12.5 mV, N = 1 to 4. A suitable combination of steps is calculated internally based on current and new target value for output voltage.

The VIO SMPS provides supply voltage for the host processor I/Os.

Table 6-1 lists the power sources provided by the TPS65911 device.

Table 6-1. Power Sources

RESOURCE	TYPE	VOLTAGES	POWER
VIO	SMPS	1.5 V	1300 mA
		1.8 V	1200 mA
		2.5 or 3.3 V	1100 mA
VDD1	SMPS	0.6 to 2.2 V	1500 mA
		3.2 V	1200 mA
		1.2 or 1.35 or 1.5 V (V_{INmin} = 3 V)	2000 mA
		0.6 ... 1.5 V in 12.5-mV steps Programmable multiplication factor: ×2, ×3. Maximum output 3.3 V	
VDD2	SMPS	0.6 to 1.5 V	1500 mA
		2.2 / 3.2 V	1200 mA
		0.6 ... 1.5 V in 12.5-mV steps Programmable multiplication factor: ×2, ×3. Maximum output 3.3 V	
VDDCtrl	SMPS	0.6 … 1.4 V in 12.5-mV steps	External component dependent
LDO1	LDO	1.0–3.3 V, 0.05-V step	320 mA
LDO2	LDO	1.0–3.3 V, 0.05-V step	320 mA
LDO3	LDO	1.0–3.3 V, 0.1-V step	200 mA
LDO4	LDO	1.0–3.3 V, 0.05-V step	50 mA
LDO5	LDO	1.0–3.3 V, 0.1-V step	300 mA
LDO6	LDO	1.0–3.3 V, 0.1-V step	300 mA
LDO7	LDO	1.0–3.3 V, 0.1-V step	300 mA
LDO8	LDO	1.0–3.3 V, 0.1-V step	300 mA

6.5 Embedded Power Controller (EPC)

The EPC manages the state of the device and controls the power-up sequence.

6.5.1 State Machine

The EPC supports the following states:

- **NO SUPPLY:** The primary battery supply voltage is not high enough to power the VRTC regulator. A global reset is asserted in this case. Everything on the device is off.
- **BACKUP:** The primary battery supply voltage is high enough to enable the VRTC domain but not enough to switch on all the resources. In this state, the VRTC regulator is in backup mode and only the 32K oscillator and RTC module are operating (if enabled). All other resources are off or under reset.
- **OFF:** The primary battery supply voltage is high enough to start the power-up sequence, but device power on is not enabled. All power supplies are in the OFF state except VRTC.
- **ACTIVE:** Device POWER ON enable conditions are met and regulated power supplies are on or can be enabled with full current capability.
- **SLEEP:** Device SLEEP enable conditions are met and some selected regulated power supplies are in low-power mode.

Figure 6-1 shows the transitions for the state machine.

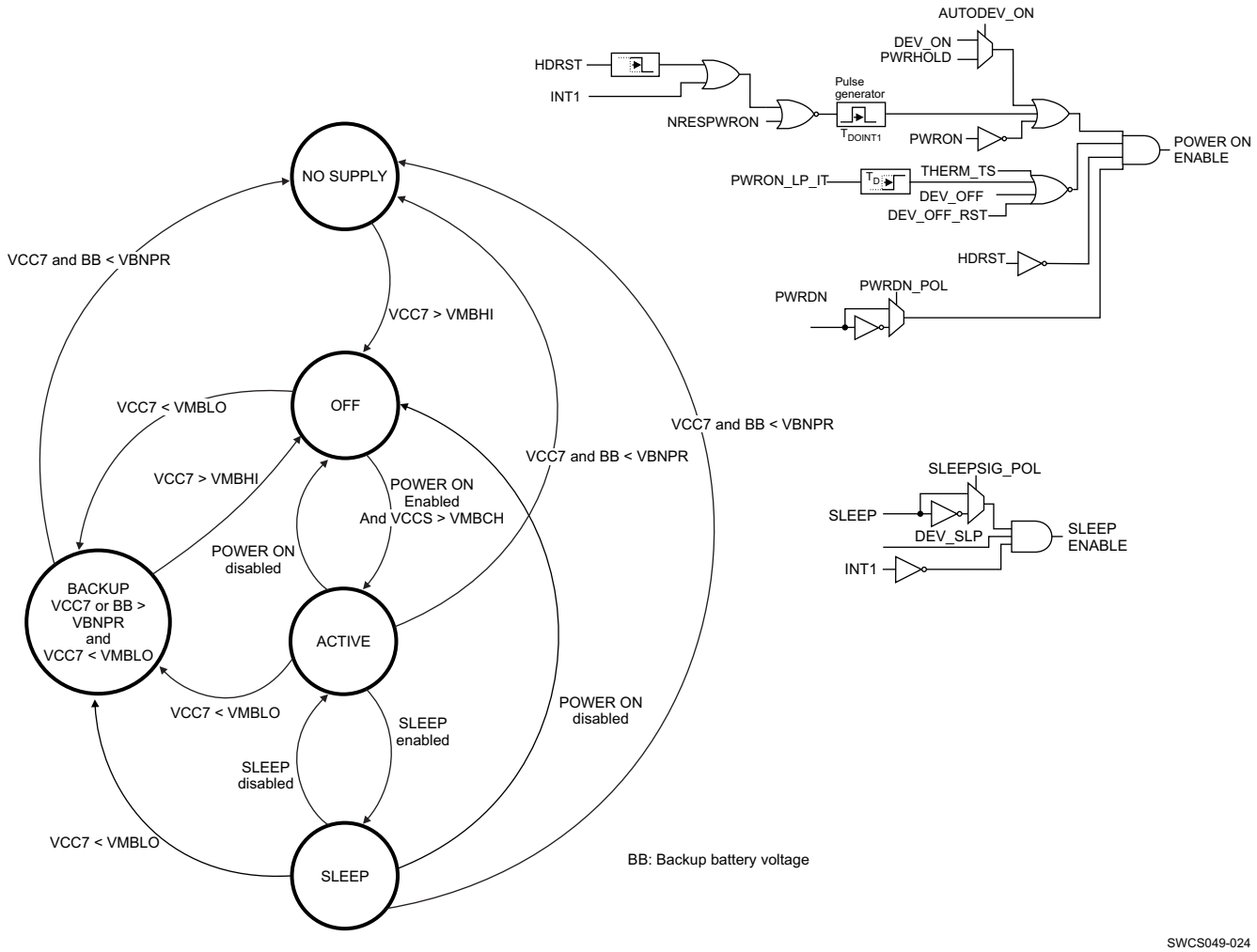

Copyright © 2016, Texas Instruments Incorporated

NOTE: PWRHOLD enables power-on unless the pin is programmed as GPI.

Figure 6-1. Embedded Power Control State Machine

Copyright © 2010–2018, Texas Instruments Incorporated

6.5.1.1 Device POWER ON Enable Conditions

The device POWER ON enable conditions are as follows:

- None of the device POWER ON disable conditions are met.
- PWRON signal low level
- Or PWRHOLD signal high level
- Or DEV_ON control bit set to 1 (default inactive)
- Or interrupt flag active (default INT1 low) generates a POWER ON enable condition during a fixed delay (t_{DOINT1} pulse duration defined in Section 5.21.3). Interrupt sources expected (if enabled), when the device is off:
  - RTC alarm interrupt
  - First-time input voltage rising above the VMBHI threshold (depending on the boot mode used) and input voltage > VMBCH threshold. The interrupt corresponding to this last condition is VMBCH_IT in the INT_STS_REG register.
  - Or HDRST reset release generates a POWER ON enable condition during a fixed delay t_{DOINT1}

Interrupt flag active generates a POWER ON enable condition pulse of length t_{DOINT1} only when the device is in the OFF state (when the NRESPWRON signal is low). The POWER ON enable condition pulse occurs only if the interrupt status bit is initially low (no previous interrupt pending in the status register). The interrupt status register must first be cleared to let the device power off during the t_{DOINT1} pulse duration.

GPIO2 cannot be used to turn on the device, even if its associated interrupt is not masked. The GPIO0, GPIO1, GPIO3, GPIO4, or GPIO5 signals can be used to turn on the device, if its associated interrupt is not masked.

NOTE

The watchdog interrupt is not a power-on event, but can wake up the device from sleep mode.

6.5.1.2 Device POWER ON Disable Conditions

Device POWER ON disable conditions are as follows:

- PWRON signal low level during more than the long-press delay: PWON_LP_DELAY (can be disabled though register programming). The interrupt corresponding to this condition is PWRON_LP_IT in the INT_STS_REG register.
- Or die temperature has reached the thermal shutdown threshold (THERM_TS = 1).
- Or DEV_OFF or DEV_OFF_RST control bit is set to 1 (DEV_OFF value is cleared when the device is in OFF state).

NOTE

If the DEV_ON bit is set to 1, after switch-off, the device switches back on. To keep the device off, DEV_ON must be cleared first.

6.5.1.3 Device SLEEP Enable Conditions

Device SLEEP enable conditions are as follows:

- SLEEP signal low level (default, or high level depending on the programmed polarity)
- And DEV_SLP control bit is set to 1.
- And interrupt flag inactive (default INT1 high): no nonmasked interrupt is pending.

The SLEEP state can be controlled by programming DEV_SLP bit and keeping the SLEEP signal in the active polarity state, or it can be controlled through the SLEEP signal setting the DEV_SLP bit to 1 after device turnon.

6.5.1.4 Device Reset Scenarios

The device has three reset scenarios:

- Full reset: All digital logic of device is reset.
  - Caused by POR (power on reset) when VCC7 < VBNPR and BB < VBNPR
- General reset: No impact on the RTC, backup registers, or interrupt status.
  - Caused by PWON_LP_RST bit set high
  - Or DEV_OFF_RST bit set high
  - Or HDRST input set high
- Turnoff: Power reinitialization in off/backup mode.

A mapping of digital registers to these reset scenarios is described in Table 6-6.

6.5.2 BOOT Configuration, Switch-ON, and Switch-OFF Sequences

The power sequence is the automated switch-on of the devices resources when an OFF-to-ACTIVE transition occurs. The power-on sequence has 15 sequential time slots to which resources (DC-DC converters, LDOs, 32-kHz clock, GPIO0, GPIO2, GPIO6, GPIO7) can be assigned. The time slot length can be selected to be 0.5 ms or 2 ms. If a resource is not assigned to any time slot, it will be in off mode after the power-on sequence and the voltage level can be changed through the register SEL bits before enabling the resource.

Power off disables all power resources at the same time by default. By setting the PWR_OFF_SEQ control bit to 1, power off will follow the power-up sequence in reverse order (the first resource to be powered on will be last to power off).

The values of VDD1, VDD2, and VDDCtrl set in the boot sequence can be selected from 16 steps. For the whole range, 100-mV steps are available: 0.6/0.7...1.4/1.5 V. From 0.8 to 1.4 V, additional values with 50-mV step resolution can be set: 0.85/1.05...1.35 V.

For LDO1, LDO2, and LDO4 all levels from 1.0 to 3.3 V are selectable in the boot sequence with 50-mV steps. For other LDOs, the level is selectable with 100-mV steps, from 1.0 to 3.3 V.

The device supports three boot configurations, which define the power sequence and several device control bits. The boot configuration is selectable by the device BOOT1 pin.

BOOT1	BOOT CONFIGURATION
Floating	Test boot mode
0	Fixed boot mode
1	EEPROM boot mode

The BOOT1 input pad is disabled after the boot mode is read at power up, to save power.

Table 6-2 and Table 6-3 describe the power sequence and general control bits defined in the boot sequence, respectively.

Fixed boot mode is the same in all devices, while EEPROM boot mode is different in each device. For a description of EEPROM boot mode, refer to the user's guide for the selected device. For a list of user's guides, see Section 8.2.1 or the device product folder on ti.com.

Copyright © 2010–2018, Texas Instruments Incorporated

Table 6-2. Boot Configuration: Power Sequence Control Bits

REGISTER	BIT	DESCRIPTION	TPS65911	
			FIXED BOOT	EEPROM BOOT
VDD1_OP_REG/ VDD1_SR_REG		VDD1 voltage level selection for boot. Levels available: 0.6/0.7/0.8/0.85/0.9/0.95/.../1.35/1.4/1.5 V	1.2 V	x
VDD1_REG	VGAIN_SEL	VDD1 gain selection, ×1 or ×2	×1	x
EEPROM		VDD1 time slot selection	3	x
DCDCCTRL_REG	VDD1_PSKIP	VDD1 pulse skip mode enable	Enable skip	x
VDD2_OP_REG/ VDD2_SR_REG		VDD2 voltage level selection for boot. Levels available: 0.6/0.7/0.8/0.85/0.9/0.95/.../1.35/1.4/1.5 V	1.5 V	x
VDD2_REG	VGAIN_SEL	VDD2 gain selection, ×1 or ×3	×1	x
EEPROM		VDD2 time slot selection	6	x
DCDCCTRL_REG	VDD2_PSKIP	VDD2 pulse skip mode enable	Enable skip	x
VIO_REG	SEL[3:2]	VIO voltage selection	1.8 V	x
EEPROM		VIO time slot selection	4	x
DCDCCTRL_REG	VIO_PSKIP	VIO pulse skip mode enable	Enable skip	x
VDDCtrl_OP_REG/ VDDCtrl_SR_REG		VDDCtrl voltage level selection for boot. Levels available: 0.6/0.7/0.8/0.85/0.9/0.95/../1.35/1.4 V	Off	x
EEPROM		VDDCtrl time slot selection	Off	x
LDO1_REG	SEL[7:2]	LDO1 voltage selection	1.05 V	x
EEPROM		LDO1 time slot	Off	x
LDO2_REG	SEL[7:2]	LDO2 voltage selection	1.2 V	x
EEPROM		LDO2 time slot	7	x
LDO3_REG	SEL[6:2]	LDO3 voltage selection	LDO3 voltage: 1 V	x
EEPROM		LDO3 time slot	Off	x
LDO4_REG	SEL[7:2]	LDO4 voltage selection	1.2 V	x
EEPROM		LDO4 time slot	2	x
LDO5_REG	SEL[6:2]	LDO5 voltage selection	LDO5 voltage: 1 V	x
EEPROM		LDO5 time slot	Off	x
LDO6_REG	SEL[6:2]	LDO6 voltage selection	LDO6 voltage: 1 V	x
EEPROM		LDO6 time slot	Off	x
LDO7_REG	SEL[6:2]	LDO7 voltage selection	1.2 V	x
EEPROM		LDO7 time slot	5	x
LDO8_REG	SEL[6:2]	LDO8 voltage selection	1 V	x
EEPROM		LDO8 time slot	7	x
CLK32KOUT pin		CLK32KOUT time slot	5	x
NRESPWRON, NRESPWRON2 pin		NRESPWRON time slot	10	x
GPIO0 pin		GPIO0 time slot	1	x
GPIO2 pin		GPIO2 time slot	Off	x
GPIO6 pin		GPIO6 time slot	6	x
GPIO7 pin		GPIO7 time slot	5	x

Copyright © 2010–2018, Texas Instruments Incorporated

Table 6-3. Boot Configuration: General Control Bits

REGISTER	BIT	DESCRIPTION	TPS65911	
			FIXED BOOT	EEPROM BOOT
VRTC_REG	VRTC_OFFMASK	0: VRTC LDO will be in low-power mode during OFF state. 1: VRTC LDO will be in full-power mode during OFF state.	0	x
DEVCTRL_REG	CK32K_CTRL	0: Clock source is crystal/external clock. 1: Clock source is internal RC oscillator.	Crystal	x
DEVCTRL_REG	DEV_ON	0: No impact 1: Will keep device on, in ACTIVE or SLEEP state	0	x
DEVCTRL2_REG	TSLOTD	Boot sequence time slot duration: 0: 0.5 ms 1: 2 ms	2 ms	x
DEVCTRL2_REG	PWON_LP_OFF	0: Turn off device after PWRON long-press not allowed. 1: Turn off device after PWRON long-press.	1	x
DEVCTRL2_REG	PWON_LP_RST	0: No impact 1: Reset digital core when device is off	1	x
DEVCTRL2_REG	IT_POL	0: INT1 signal will be active-low. 1: INT1 signal will be active-high.	0	x
INT_MSK_REG	VMBHI_IT_MSK	0: Device will automatically switch-on at NO SUPPLY-to-OFF or BACKUP-to-OFF transition (device will switch-on when supply is inserted) 1: Start-up reason required before switch-on (VMBHI event interrupt masked)	1	x
INT_MSK3_REG	GPIO5_F_IT_MSK	0: GPIO5 falling-edge detection interrupt not masked 1: GPIO5 falling-edge detection interrupt masked	1	x
INT_MSK3_REG	GPIO5_R_IT_MSK	0: GPIO5 rising-edge detection interrupt not masked 1: GPIO5 rising-edge detection interrupt masked	0	x
INT_MSK3_REG	GPIO4_F_IT_MSK	0: GPIO4 falling-edge detection interrupt not masked 1: GPIO4 falling-edge detection interrupt masked	1	x
INT_MSK3_REG	GPIO4_R_IT_MSK	0: GPIO4 rising-edge detection interrupt not masked 1: GPIO4 rising-edge detection interrupt masked	0	x
GPIO0_REG	GPIO_ODEN	0: GPIO0 configured as push-pull output 1: GPIO0 configured as open-drain output	Push-pull	x
WATCHDOG_REG	WATCHDOG_EN	0: Watchdog disabled 1: Watchdog enabled, periodic operation with 100 s	1	x
EEPROM	VMBBUF_BYPASS	0: Enable input buffer for external resistive divider 1: In single-cell system, disable buffer for low power	Disable buffer	x
VMBCH_REG	VMBCH_SEL[5:1]	Select threshold for boot gating comparator COMP1, 2.5–3.5 V.	3.1 V	x

Copyright © 2010–2018, Texas Instruments Incorporated

Table 6-3. Boot Configuration: General Control Bits (continued)

REGISTER	BIT	DESCRIPTION	TPS65911	
			FIXED BOOT	EEPROM BOOT
EEPROM	AUTODEV_ON	0: PWRHOLD pin is used as PWRHOLD feature. 1: PWRHOLD pin is GPI. After power on, DEV_ON set high internally, no processor action required to keep supplies.	1, PWRHOLD pin is GPI	x
EEPROM	PWRDN_POL	0: PWRDN signal will be active-low. 1: PWRDN signal will be active-high.	Active-low	x

6.5.3 Control Signals

6.5.3.1 SLEEP

When none of the device SLEEP-disable conditions are met, a falling edge (default, or rising edge, depending on the programmed polarity) of this signal causes an ACTIVE-to-SLEEP state transition of the device. A rising edge (default, or falling edge, depending on the programmed polarity) causes a transition back to the ACTIVE state. This input signal is level-sensitive and no debouncing is applied.

While the device is in the SLEEP state, predefined resources are automatically set in their low-power mode or off. Resources can be kept in their active mode (full-load capability) by programming the SLEEP_KEEP_LDO_ON and the SLEEP_KEEP_RES_ON registers. These registers contain 1 bit per power resource. If the bit is set to 1, then that resource stays in active mode when the device is in the SLEEP state.

32KCLKOUT is also included in the SLEEP_KEEP_RES_ON register and the 32-kHz clock output is maintained in the SLEEP state if the corresponding mask bit is set.

The status (low or high) of GPO0, GPO6, GPO7, and GPO8 are also controlled by the SLEEP signal, to allow enabling and disabling of external resources during sleep.

6.5.3.2 PWRHOLD

The PWRHOLD pin can be used as a PWRHOLD signal input or as a general purpose input (GPI). The mode is selected by the AUTODEV_ON bit, which is part of the boot configuration. When AUTODEV_MODE = 0, the PWRHOLD feature is selected.

Configured as PWRHOLD, when none of the device POWER ON disable conditions are met, a high level of this signal causes an OFF-to-ACTIVE state transition of the device and a low level causes a transition back to the OFF state.

This input signal is level-sensitive and no debouncing is applied. The rising and/or falling edge of PWRHOLD is highlighted through an associated interrupt if interrupt is unmasked.

When AUTODEV_ON = 1, the pin is used as a GPI. As a GPI, this input can generate a maskable interrupt from a rising or falling edge of the input. When AUTODEV_ON = 1, a rising edge of NRESPWRON also automatically sets the DEV_ON bit to 1 to keep supplies after the switch-on sequence, thus removing the need for the processor to set the PWRHOLD signal or the DEV_ON bit.

6.5.3.3 BOOT1

This signal determines with which processor the device is working and, hence, which power-up sequence is needed. For more details, see Section 5.21.2. No debouncing is present on this input signal.

6.5.3.4 NRESPWRON, NRESPWRON2

The NRESPWRON signal is used as the reset to the processor and is in the VDDIO domain. It is held low until the ACTIVE state is reached. For detailed timing, see Section 5.21.2.

The NRESPWRON2 signal is a second reset output. It follows the state of NRESPWRON but has an open-drain output with external pullup. The supply for the external pullup must not be activated before the TPS65911 device is in control of the output state (that is, not earlier than during first power-up sequence slot). In off mode, the NRESPWRON2 output has weak internal pulldown.

6.5.3.5 CLK32KOUT

This signal is the output of the 32K oscillator, which can be enabled or not during the power-on sequence, depending on the boot mode. It can be enabled and disabled by register bit, during the ACTIVE state of the device. The CLK32KOUT output can also be enabled or not during the SLEEP state of the device depending on the programming of the SLEEPMASK register.

6.5.3.6 PWRON

The PWRON input is connected to an external button. If the device is in the OFF or SLEEP state, a debounced falling edge (PWRON input low for minimum of 100 ms) causes an OFF-to-ACTIVE state or a SLEEP-to-ACTIVE state transition of the device. If the device is in active mode, then a low level on this signal generates an interrupt. If the PWRON signal is low for more than the PWON_TO_OFF_DELAY delay and the corresponding interrupt is not acknowledged by the processor within 1 second, the device goes into the OFF state. For PWRON behavior, see Figure 5-2 and Figure 5-3.

6.5.3.7 INT1

The INT1 signal (default active low) warns the host processor of any event that has occurred on the TPS65911 device. The host processor can then poll the interrupt from the interrupt status register through I^2C to identify the interrupt source. A low level (default setting) indicates an active interrupt, highlighted in the INT_STS_REG register. The polarity of INT1 can be set programming the IT_POL control bit. INT1 flag active is a POWER ON enable condition during a fixed delay, t_{DOINT1} (only), when the device is in the OFF state (when NRESPWRON is low).

Any of the interrupt sources can be masked programming the INT_MSK_REG register. When an interrupt is masked its corresponding interrupt status bit is still updated, but the INT1 flag is not activated. Interrupt source masking can be used to mask a device switch-on event. Because interrupt flag active is a POWER ON enable condition, during t_{DOINT1} delay, any interrupt not masked must be cleared to allow immediate turn off of the device.

For a description of interrupt sources, see Table 6-5.

6.5.3.8 EN2 and EN1

EN2 and EN1 are the data and clock signals of the serial control interface dedicated to voltage scaling applications.

These signals can also be programmed to be used as enable signals of one or several supplies, when the device is on (NRESPWRON high). A resource assigned to EN2 or EN1 control automatically disables the serial control interface.

Programming EN1_LDO_ASS_REG, EN2_LDO_REG, and SLEEP_KEEP_LDO_ON_REG registers: EN1 and EN2 signals can be used to control the turn on/off or SLEEP state of any LDO-type supplies.

Programming EN1_SMPS_ASS_REG, EN2_SMPS_ASS_REG, and SLEEP_KEEP_RES_ON registers: EN1 and EN2 signals can be used to control the turn on/off or LOW-POWER state (PFM mode) of SMPS-type supplies.

The EN2 and EN1 signals can be used to set the output voltage of VDD1 and VDD2 SMPS from a roof to a floor value, preprogrammed in the VDD1_OP_REG, VDD2_OP_REG and VDD1_SR_REG, VDD2_SR_REG registers.

When a supply is controlled through the EN1 or EN2 signals, its state is no longer driven by the device SLEEP state.

Copyright © 2010–2018, Texas Instruments Incorporated

6.5.3.9 GPIO0 to GPIO8

GPIO0, GPIO2, GPIO6, and GPIO7 can be programmed to be part of the power-up sequence and used as enable signals for external resources.

GPIO0 is a configurable I/O in the VCC7 domain. By default, its output is push-pull, driving low. GPIO0 can also be configured as an open-drain output with external pullup.

GPIO1 through GPIO8 are configurable open-drain digital I/Os in the VRTC domain. GPIO directivity, debouncing delay, and internal pullup can be programmed. By default, all are inputs with weak internal pulldown; as open-drain output an external pullup is required.

GPIO0, GPIO1, and GPIO3 through GPIO5 can be used to turn on the device if the corresponding interrupt is not masked. When configured as an input, GPIO2 cannot be used to turn on the device, even if its associated interrupt is not masked. The GPIO interrupt is level sensitive. When an interrupt is detected, before clearing the interrupt, it should first be disabled by masking it.

GPIO1 and GPIO3, which have current sink capability of 10 mA, can also be used to drive LEDs connected to a 5-V supply.

GPIO2 can be used for synchronizing DC-DC converters to an external clock. Programming DCDCCKEXT = 1, VDD1, VDD2, and VIO DCDC switching can be synchronized using a 3-MHz clock set though the GPIO2 pin. VDD1 and VDD2 will be in-phase and VIO will be phase shifted by 180 degrees.

It is recommended not to connect noisy switching signals to GPIO4 and GPIO5.

6.5.3.10 HDRST Input

HDRST is a cold reset input for the PMIC. High level at input forces the TPS65911 device into off mode, causing a general reset of device to the default settings. The default state is defined by the register reset state and boot configuration. HDRST high level keeps the device in off mode. When reset is released and HDRST input goes low, the device automatically transitions to active mode. The device is kept in active mode for the period t_{DONIT1}, after which another power-on enable reason is required to keep the device on.

The HDRST input is in the VRTC domain and has a weak internal pulldown, which is active by default.

6.5.3.11 PWRDN

The PWRDN input is a reset input with selectable polarity (PWRDN_POL). High(low) level at input forces the TPS65911 device into off mode, causing a power-off reset. Off mode is maintained until PWRDN is released and a start-up reason (for example, PWRON button press or DEV_ON = 1) is detected. An interrupt is generated to indicate the cause for shutdown. The PWRDN input is in the VRTC domain but can tolerate a 5-V input.

6.5.3.12 Comparators: COMP1 and COMP2

The TPS65911 device has three comparators for system status detection/control. One comparator detects the voltage at pin VCC7. When VCC7 > VMBHI, the comparator initiates a NO SUPPLY-to-OFF transition and the VMBHI_IT interrupt is generated. When VCC7 < VMBLO, the comparator initiates an ACTIVE/SLEEP/OFF-to-BACKUP transition. When both VCC7 and backup battery are below VBPNR, the device goes to the NO SUPPLY state.

Comparators COMP1 and COMP2 detect the voltage of VCCS. Programmable comparator COMP1 is intended for detecting if battery voltage is high enough for an OFF-to-ACTIVE transition of the TPS65911 device. For an OFF-to-ACTIVE transition VCCS must be > VMBCH (primary battery charged) and a level below the comparator threshold prevents the power-up sequence. The threshold can be set from 2.5 to 3.5 V with 50-mV steps through VMBCH_SEL. The comparator has debouncing so that VCCS must stay above VMBDCH (VMBCH – 0.1 V) for a debouncing period of 61 µs. The comparator can be bypassed if the threshold selection is set to 0. The default threshold is set in the boot configuration.

In a system with a multiple-cell battery, the battery level is sensed through an external resistor divider. The TPS65911 device has an internal buffer at the VCCS input, which must be used with the external resistive divider.

In a single-cell system, VCCS and VCC7 are connected directly to the battery. The VCCS input buffer can be bypassed to minimize power consumption. The buffer bypass is controlled with the VMBBUF_BYPASS bit in the boot configuration.

COMP2 is disabled by default and can be enabled by software. The comparator trigger generates an interrupt which is programmable on the rising (VMBCH2_H_IT) or falling edge (VMBCH2_L_IT), hence the comparator can be used for detecting high or low battery scenarios. COMP2 generates an interrupt for the host. In sleep mode, this creates a wake-up interrupt for the host. In off mode, the comparator trigger generates a turnon event. In backup or no supply modes, the comparator is not active.

The COMP2 threshold can be set from 2.5 to 3.5 V with 50-mV steps. Enabling the comparator is done through the voltage threshold selection bit VMBDCH2_SEL, which is set to 0 by default.

Copyright © 2010–2018, Texas Instruments Incorporated

6.5.3.13 Watchdog

The watchdog has two modes of operation.

In periodic operation, an interrupt is generated with a regular period defined by the WTCHDG_TIME setting. The IC initiates WTCHDOG shutdown if the interrupt is not cleared within the period. The watchdog interrupt WTCHDOG counter is reinitialized when NRESPWRON is low.

In interrupt mode the IC initiates WTCHDOG counter when interrupt is set pending and is cleared when interrupt is cleared. If no interrupt is cleared before watchdog expiration within WTCHDG_TIME, the device goes to off mode.

By default, periodic watchdog functionality is enabled with the maximum WTCHDG_TIME period.

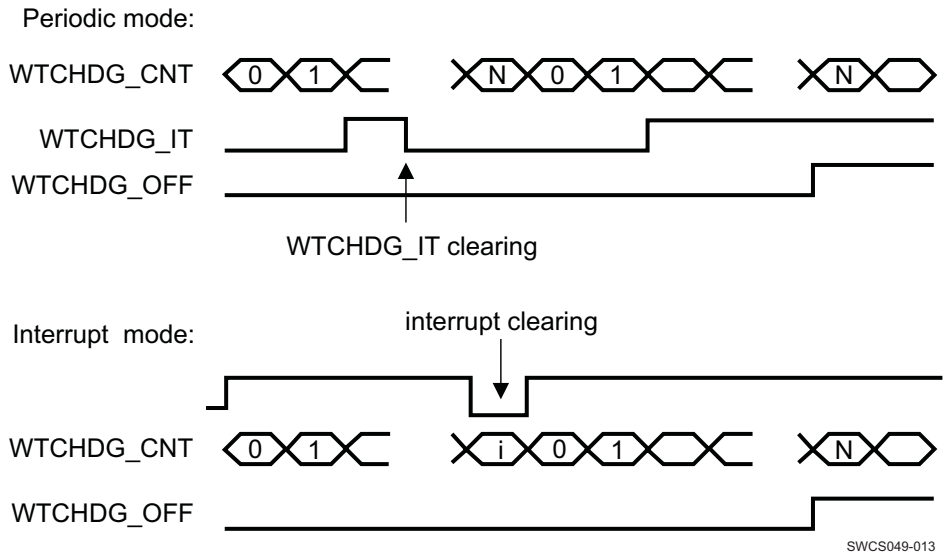

Figure 6-2. Watchdog Signals

6.5.3.14 Tracking LDO

LDO4 has an optional mode where its output level follows that of VDD1, from 0.6 to 1.5 V, when VDD1 is active. When VDD1 is set to off, the LDO4 output is defined by the SEL[7:2] bits in LDO4_REG, and can be set from 0.8 to 1.5 V.

Tracking mode is enabled by setting TRACK = 1 in DCDCCTRL_REG. In initial activation, VDD1 must be enabled and allowed to settle before enabling tracking mode. After initial activation, tracking mode can be kept enabled while VDD1 is turned off. The value of TRACK is set to default (0) after any turnoff event.

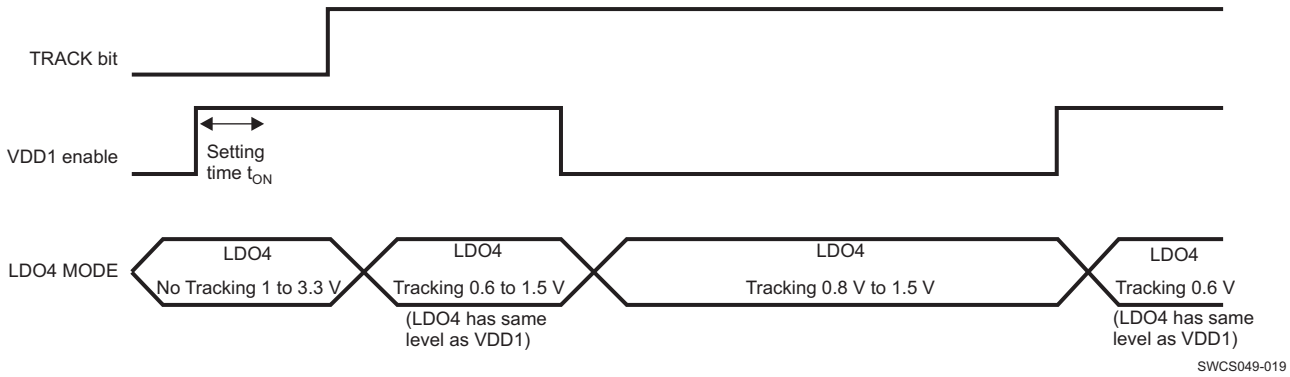

Figure 6-3. Tracking LDO

6.6 PWM and LED Generators

The TPS65911 device has two LED ON/OFF signal generators, LED1 and LED2. LED1 and LED2 have independently controllable periods from 125 ms to 8 s and ON time from 62.5 to 500 ms. Within the period, one or two ON pulses can be generated (control bit LED1(2)_SEQ). The user must take care to program period and ON time correctly, because no limitation on selected values is imposed. LED1 and LED2 signals can be routed to GPIO1 and GPO3 open-drain outputs, respectively. These GPIOs have a current sink capability of 10 mA.

The PWM generator frequency and duty cycle are set by the PWM_FREQ and PWM_DUTY_CYCLE bits, respectively. The PWM generator signal can be connected to the GPIO3 or GPIO8 output. The PWM generator uses the 3-MHz clock, which is not available in off mode. To enable the PWM in sleep mode, the I2CHS_KEEPON bit must be set to 1.

6.7 Dynamic Voltage Frequency Scaling and Adaptive Voltage Scaling Operation

Dynamic voltage frequency scaling (DVFS) operation: A supply voltage value corresponding to a targeted frequency of the digital core supplied is programmed in VDD1_OP_REG or VDD2_OP_REG registers.

The slew rate of the voltage supply reaching a new VDD1_OP_REG or VDD2_OP_REG programmed value is limited to 12.5 mV/µs, fixed value.

Adaptative voltage scaling (AVS) operation: A supply voltage value corresponding to a supply voltage adjustment is programmed in VDD1_SR_REG or VDD2_SR_REG registers. The supply voltage is then intended to be tuned by the digital core supplied, based its performance self-evaluation. The slew rate of VDD1 or VDD2 voltage supply reaching a new programmed value is programmable though the VDD1_REG or VDD2_REG register, respectively.

A serial control interface (optional mode for EN1 and EN2 pins) can be dedicated to voltage scaling applications, to give dedicated access to the VDD1_OP_REG, VDD1_SR_REG and VDD2_OP_REG, VDD2_SR_REG registers.

A general-purpose serial control interface (CTL-I^2C) also gives access to these registers, if the SR_CTL_I2C_SEL control bit is set to 1 in the DEVCTRL_REG register (default inactive).

Both control interfaces are compliant with HS-I^2C specification (100 Kbps, 400 Kbps, or 3.4 Mbps).

6.8 32-kHz RTC Clock

The TPS65911 device can provide a 32-kHz clock to the platform through the CLK32KOUT output, when a crystal is connected.

Alternatively, the device can accept a square-wave 32-kHz clock signal applied to OSC32IN input (OSC32KOUT kept floating) and gate the clock to CLK32OUT. This clock must be present for any state of the EPC except the NO SUPPLY state. The TPS65911 device also has an internal 32-kHz RC oscillator to decrease the BOM if an accurate clock is not needed by the system.

Default selection of a 32-kHz RC oscillator versus 32-kHz crystal oscillator or external square-wave 32-kHz clock depends on the boot configuration setting for the CK32K_CTRL bit.

Switching from the 32-kHz RC oscillator to the 32-kHz crystal oscillator or external square-wave 32-kHz clock can also be programmed though the DEVCTRL_REG register.

Copyright © 2010–2018, Texas Instruments Incorporated

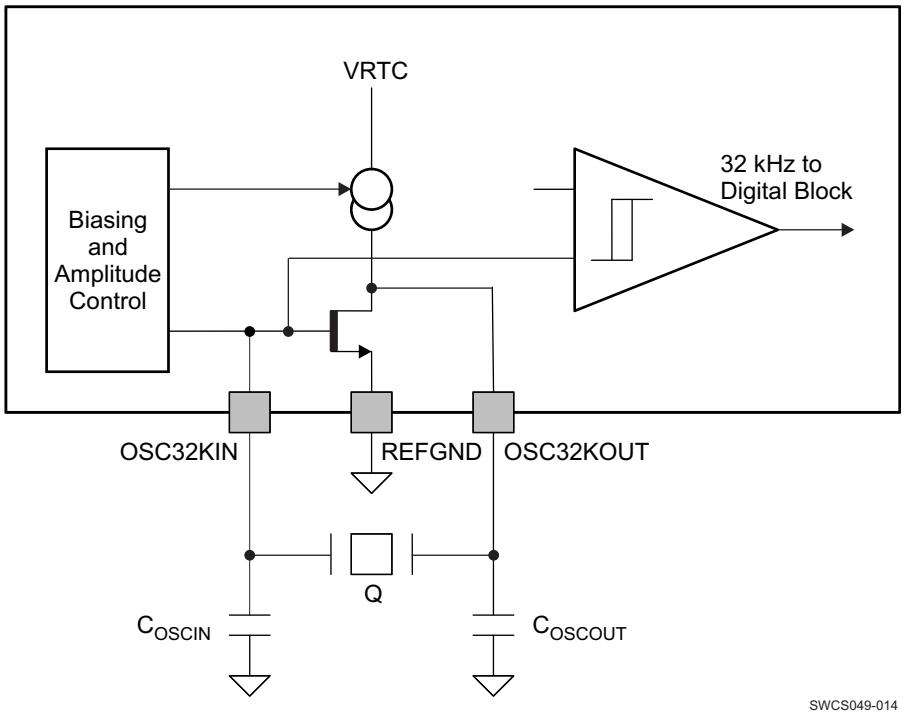

Copyright © 2016, Texas Instruments Incorporated

Figure 6-4. Crystal Oscillator 32-kHz Clock

6.9 Real Time Clock (RTC)

The RTC, which is driven by the 32-kHz clock, provides the alarm and timekeeping functions. The RTC is kept supplied when the device is in the OFF state or the BACKUP state.

The primary functions of the RTC block are:

- Time information (seconds/minutes/hours) directly in binary-coded decimal (BCD) format
- Calendar information (Day/Month/Year/Day of the week) directly in BCD code up to year 2099
- Programmable interrupts generation: The RTC can generate two interrupts: a timer interrupt RTC_PERIOD_IT periodically (1s/1m/1h/1d period) and an alarm interrupt RTC_ALARM_IT at a precise time of the day (alarm function). These interrupts are enabled using IT_ALARM and IT_TIMER control bits. Periodically interrupts can be masked during the SLEEP period to avoid host interruption and are automatically unmasked after SLEEP wakeup (using the IT_SLEEP_MASK_EN control bit).
- Oscillator frequency calibration and time correction

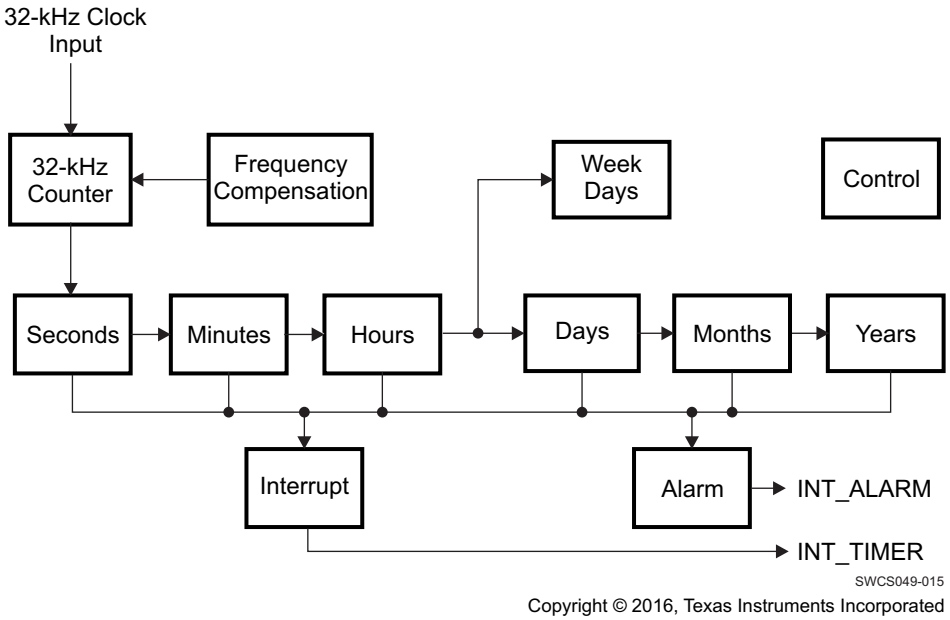

Figure 6-5. RTC Digital Section Block Diagram

6.9.1 Time Calendar Registers

All the time and calendar information is available in these dedicated registers, called TC registers. Values of the TC registers are written in BCD format.

1. Years data ranges from 00 to 99
   - Leap year = Year divisible by four (2000, 2004, 2008, 2012...)
   - Common year = other years
2. Months data ranges from 01 to 12
3. Days value ranges from:
   - 1 to 31 when months are 1, 3, 5, 7, 8, 10, 12
   - 1 to 30 when months are 4, 6, 9, 11
   - 1 to 29 when month is 2 and year is a leap year
   - 1 to 28 when month is 2 and year is a common year
4. Weeks value ranges from 0 to 6
5. Hours value ranges from 00 to 23 in 24-hour mode and ranges from 1 to 12 in AM/PM mode
6. Minutes value ranges from 0 to 59
7. Seconds value ranges from 0 to 59

To modify the current time, software writes the new time into TC registers to fix the time/calendar information. The processor can write into the TC registers without stopping the RTC. In addition, software can stop the RTC by clearing the STOP_RTC bit of the control register and check the RUN bit of the status to be sure that the RTC is frozen, then update the TC values, and then restart the RTC by setting STOP_RTC bit.

Example: Time is 10H54M36S PM (PM_AM mode set), 2008 September 5, previous register values are:

Table 6-4. RTC Registers Example

Register	Value
SECONDS_REG	0x36
MINUTES_REG	0x54

Copyright © 2010–2018, Texas Instruments Incorporated

Table 6-4. RTC Registers Example (continued)

Register	Value
HOURS_REG	0x90
DAYS_REG	0x05
MONTHS_REG	0x09
YEARS_REG	0x08

The user can round to the nearest minute, by setting the ROUND_30S register bit. TC values are set to the nearest minute value at the next second. The ROUND_30S bit is automatically cleared when the rounding time is performed.

Example:

- If current time is 10H59M45S, a round operation changes time to 11H00M00S.
- If current time is 10H59M29S, a round operation changes time to 10H59M00S.

6.9.2 General Registers

Software can access the RTC_STATUS_REG and RTC_CTRL_REG registers at any time (except for the RTC_CTRL_REG[5] bit, which must be changed only when the RTC is stopped).

6.9.3 Compensation Registers

The RTC_COMP_MSB_REG and RTC_COMP_LSB_REG registers must respect the available access period. These registers must be updated before each compensation process. For example, software can load the compensation value into these registers after each hour event, during an available access period.

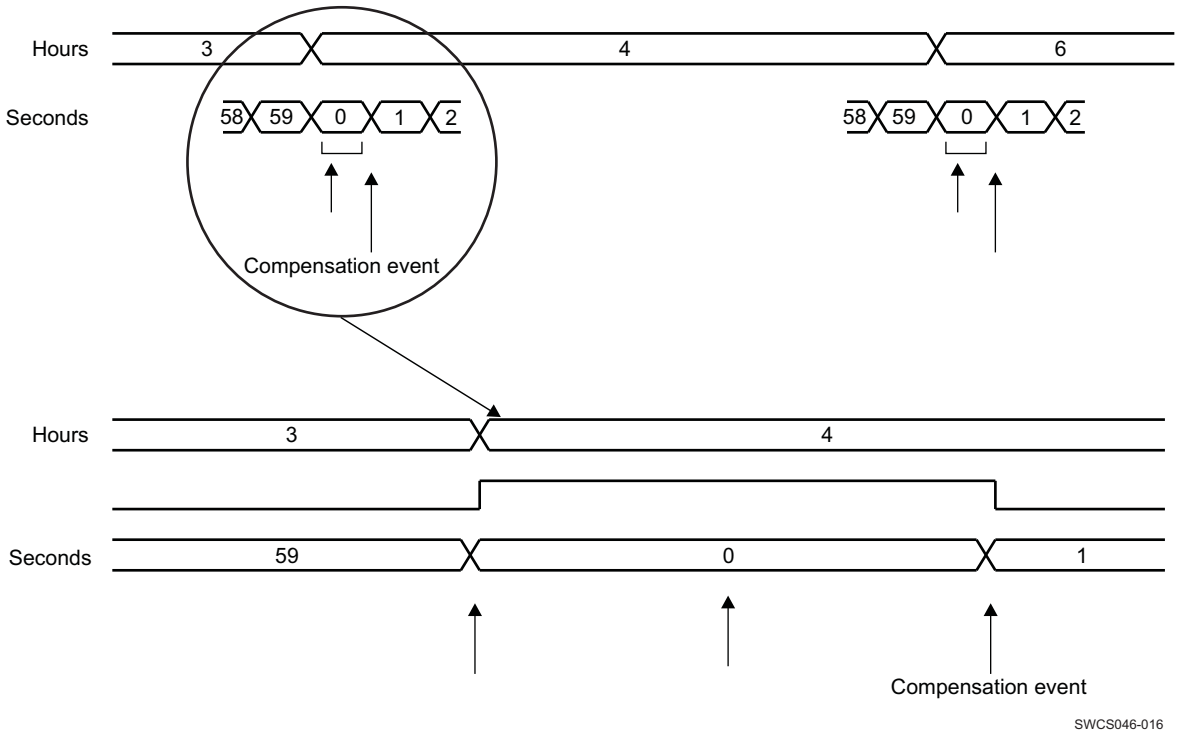

Figure 6-6. RTC Compensation Scheduling

This drift can be balanced to compensate for any inaccuracy of the 32-kHz oscillator. Software must calibrate the oscillator frequency, calculate the drift compensation versus 1-hour time period; and then load the compensation registers with the drift compensation value. Indeed, if the AUTO_COMP_EN bit in the RTC_CTRL_REG is enabled, the value of COMP_REG (in twos-complement) is added to the RTC 32-kHz counter at each hour and 1 second. When COMP_REG is added to the RTC 32-kHz counter, the duration of the current second becomes (32768 – COMP_REG)/32768s; so, the RTC can be compensated with a 1/32768 s/hour time unit accuracy.

NOTE

The compensation is considered once written into the registers.

6.10 Backup Battery Management

The device includes a backup battery switch connecting the VRTC regulator input to a primary battery (VCC7) or to a backup battery (VBACKUP), depending on the voltage value of the battery.

The VRTC supply can then be maintained during a BACKUP state as long as the input voltage is high enough (> VBNPR threshold). Below the VBNPR voltage threshold, the digital core of the device is set under reset by internal signal Power-on Reset (POR).

The backup domain functions which are always supplied from VRTC are:

- The internal 32-kHz oscillator
- Backup registers

The backup battery can be charged from the primary battery through an embedded charger. The backup battery charge voltage and enable is controlled through BBCH_REG register programming. This register content is maintained during the device BACKUP state.

Hence, when enabled, the backup battery charge is maintained as long as the primary battery voltage is higher than the VMBLO threshold and the backup battery voltage.

6.11 Backup Registers

As part of the RTC, the device contains five 8-bit registers that can be used for storage by the application firmware when the external host is powered down. These registers retain their content as long as the VRTC is active.

6.12 I^2C Interface

A general-purpose serial control interface (CTL-I^2C) allows read and write access to the configuration registers of all resources of the system.

A second serial control interface (optional mode for EN1 and EN2 pins) can be dedicated to DVFS.

Both control interfaces are compliant with the HS-I^2C specification.

These interfaces support the standard slave mode (100 Kbps), fast mode (400 Kbps), and high-speed mode (3.4 Mbps). The general-purpose I^2C module using one slave hard-coded address (ID1 = 2Dh). The voltage scaling dedicated I^2C module uses one slave hard-coded address (ID0 = 12h). The master mode is not supported.

Addressing:

The device supports seven-bit mode addressing.

It does not support the following features:

- 10-bit addressing
- General call

Copyright © 2010–2018, Texas Instruments Incorporated

6.12.1 Access Protocols

For compatibility, the I²C interfaces in the TPS65911 device use the same read/write protocol as other TI power ICs, based on an internal register size of 8 bits. Supported transactions are described in the following sections.

6.12.1.1 Single Byte Access

A write access is initiated by a first byte including the address of the device (7 MSBs) and a write command (LSB), a second byte provides the address (8 bits) of the internal register, and the third byte represents the data to be written in the internal register, see Figure 6-7.

A read access is initiated by:

- A first byte, including the address of the device (7 MSBs) and a write command (LSB)
- A second byte, providing the address (8 bits) of the internal register
- A third byte, including again the device address (7 MSBs) and the read command (LSB)

The device replies by sending a fourth byte representing the content of the internal register (see Figure 6-8).

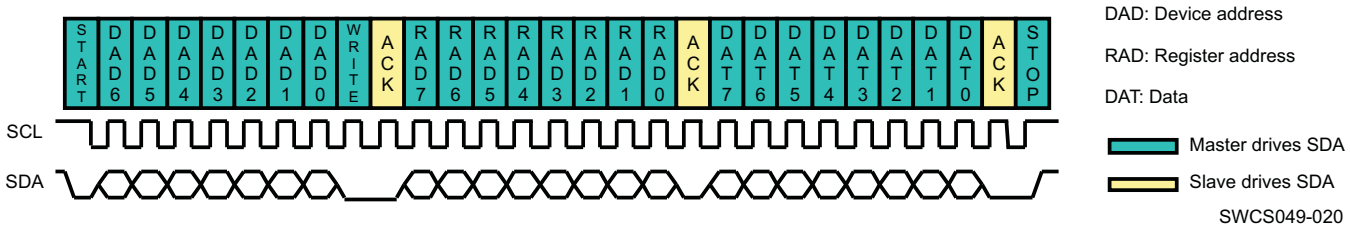

Figure 6-7. I²C Write Access Single Byte

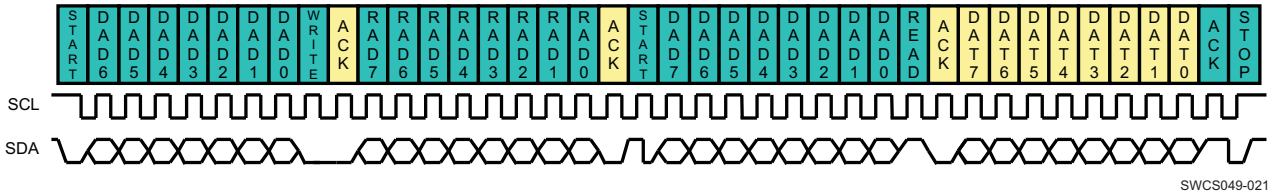

Figure 6-8. I²C Read Access Single Byte

6.12.1.2 Multiple Byte Access to Several Adjacent Registers

A write access is initiated by:

- A first byte, including the address of the device (7 MSBs) and a write command (LSB)
- A second byte, providing the base address (8 bits) of the internal registers

The following N bytes represent the data to be written in the internal register starting at the base address and incremented by one at each data byte (see Figure 6-9).

A read access is initiated by:

- A first byte, including the address of the device (7 MSBs) and a write command (LSB)
- A second byte, providing the base address (8 bits) of the internal register
- A third byte, including again the device address (7 MSBs) and the read command (LSB)

The device replies by sending a fourth byte, representing the content of the internal registers, starting at the base address and next consecutive ones (see Figure 6-10).

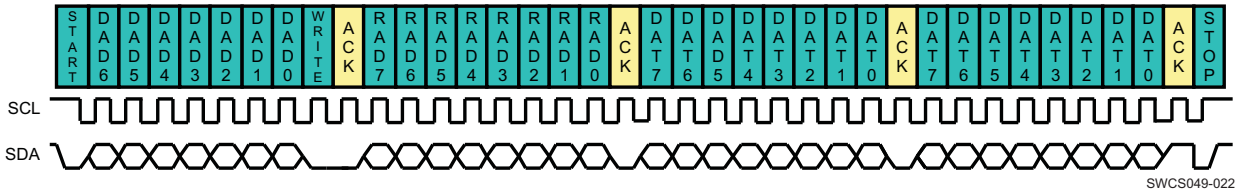

Figure 6-9. I²C Write Access Multiple Bytes

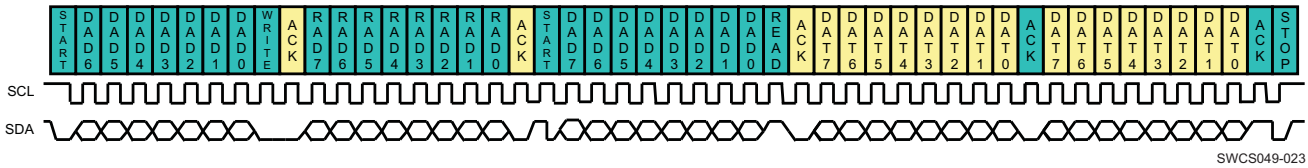

Figure 6-10. I²C Read Access Multiple Bytes

6.13 Thermal Monitoring and Shutdown

A thermal protection module monitors the junction temperature of the device versus two thresholds:

- Hot-die temperature threshold
- Thermal shutdown temperature threshold

When the hot-die temperature threshold is reached, an interrupt is sent to software to close the noncritical running tasks.

When the thermal shutdown temperature threshold is reached, the TPS65911 device is set under reset and a transition to OFF state is initiated. Then the POWER ON enable conditions of the device are not considered until the die temperature has decreased below the hot-die threshold. Hysteresis is applied to the hot-die and shutdown thresholds, when detecting a falling edge of temperature, and both detections are debounced to avoid any parasitic detection.

The TPS65911 device allows programming of four hot-die temperature thresholds to increase the flexibility of the system.

By default, the thermal protection is enabled in ACTIVE state, but can be disabled through programming the THERM_REG register. The thermal protection can be enabled in SLEEP state programming the SLEEP_KEEP_RES_ON register. The thermal protection is automatically enabled during an OFF-to-ACTIVE state transition and is kept enabled in OFF state after a switch-off sequence caused by a thermal shutdown event. Transition to OFF state sequence caused by a thermal shutdown event is highlighted in the INT_STS_REG status register. Recovery from this OFF state is initiated (switch-on sequence) when the die temperature falls below the hot-die temperature threshold.

Hot-die and thermal shutdown temperature threshold detection states can be monitored or masked by reading or programming the THERM_REG register. The hot-die interrupt can be masked by programming the INT_MSK_REG register.

6.14 Interrupts

Table 6-5 lists the interrupt sources.

Table 6-5. Interrupt Sources

INTERRUPT	DESCRIPTION
RTC_ALARM_IT	RTC alarm event: Occurs at programmed determinate date and time (running in ACTIVE, OFF, and SLEEP state, default inactive)
RTC_PERIOD_IT	RTC periodic event: Occurs at programmed regular period of time (each second or minute) (running in ACTIVE, OFF, and SLEEP state, default inactive)

Copyright © 2010–2018, Texas Instruments Incorporated

Table 6-5. Interrupt Sources (continued)

INTERRUPT	DESCRIPTION
HOT_DIE_IT	The embedded thermal monitoring module has detected a die temperature above the hot-die detection threshold (running in ACTIVE and SLEEP state). Level sensitive interrupt.
PWRHOLD_R_IT	PWRHOLD signal rising edge
PWRHOLD_F_IT	PWRHOLD signal falling-edge
PWRON_LP_IT	PWRON is low during more than the long-press delay: PWON_TO_OFF_DELAY (can be disabled though register programming).
PWRON_IT	PWRON is low while the device is on (running in ACTIVE and SLEEP state). Level-sensitive interrupt.
VMBHI_IT	The battery voltage rise above the VMBHI threshold: NO SUPPLY-to-OFF or BACKUP-to-OFF device states transition (first battery plug or battery voltage bounce detection)
VMBDCH_IT	The battery voltage fall down below the VMBDCH threshold: the minimum operating voltage of power supplies.
GPIO0_R_IT	GPIO_CKSYNC rising-edge detection
GPIO0_F_IT	GPIO_CKSYNC falling-edge detection
VMBCH2_H_IT	Comparator 2 input above threshold detection
VMBCH2_L_IT	Comparator 2 input below threshold detection
GPIO1_R_IT	GPIO1 rising-edge detection
GPIO1_F_IT	GPIO1 falling-edge detection
GPIO2_R_IT	GPIO2 rising-edge detection
GPIO2_F_IT	GPIO2 falling-edge detection
GPIO3_R_IT	GPIO3 rising-edge detection
GPIO3_F_IT	GPIO3 falling-edge detection
GPIO4_R_IT	GPIO4 rising-edge detection
GPIO4_F_IT	GPIO4 falling-edge detection
GPIO5_R_IT	GPIO5 rising-edge detection
GPIO5_F_IT	GPIO5 falling-edge detection
WTCHDG_IT	Watchdog interrupt
PWRDN_IT	PWRDN reset interrupt

6.15 Register Maps

6.15.1 Functional Registers

The possible device reset domains are:

- Full reset: All digital logic of device is reset.
  - Caused by POR (power on reset) when VCC7 < VBNPR and BB < VBNPR
- General reset: No impact on RTC, backup registers or interrupt status.
  - Caused by PWON_LP_RST bit set high or
  - DEV_OFF_RST bit set high or
  - HDRST input set high
- Turnoff OFF: Power reinitialization in off/backup mode.

In the following register description, the reset domain for each register is defined in the register table heading.

NOTE

DCDCCTRL_REG and DEVCTRL2_REG have bits in two reset domains.

The comment *Default value: See boot configuration* indicates that bit default value is set in boot configuration and not by the register reset value.

6.15.1.1 TPS65911_FUNC_REG Registers Mapping Summary

Table 6-6. TPS65911_FUNC_REG Register Summary(1)

Register Name	Type	Register Width (Bits)	Register Reset	Address Offset
SECONDS_REG	RW	8	0x00	0x00
MINUTES_REG	RW	8	0x00	0x01
HOURS_REG	RW	8	0x00	0x02
DAYS_REG	RW	8	0x01	0x03
MONTHS_REG	RW	8	0x01	0x04
YEARS_REG	RW	8	0x00	0x05
WEEKS_REG	RW	8	0x00	0x06
ALARM_SECONDS_REG	RW	8	0x00	0x08
ALARM_MINUTES_REG	RW	8	0x00	0x09
ALARM_HOURS_REG	RW	8	0x00	0x0A
ALARM_DAYS_REG	RW	8	0x01	0x0B
ALARM_MONTHS_REG	RW	8	0x01	0x0C
ALARM_YEARS_REG	RW	8	0x00	0x0D
RTC_CTRL_REG	RW	8	0x00	0x10
RTC_STATUS_REG	RW	8	0x80	0x11
RTC_INTERRUPTS_REG	RW	8	0x00	0x12
RTC_COMP_LSB_REG	RW	8	0x00	0x13
RTC_COMP_MSB_REG	RW	8	0x00	0x14
RTC_RES_PROG_REG	RW	8	0x27	0x15
RTC_RESET_STATUS_REG	RW	8	0x00	0x16
BCK1_REG	RW	8	0x00	0x17
BCK2_REG	RW	8	0x00	0x18
BCK3_REG	RW	8	0x00	0x19
BCK4_REG	RW	8	0x00	0x1A
BCK5_REG	RW	8	0x00	0x1B
PUADEN_REG	RW	8	0x1F	0x1C
REF_REG	RO	8	0x01	0x1D
VRTC_REG	RW	8	0x01	0x1E
VIO_REG	RW	8	0x05	0x20
VDD1_REG	RW	8	0x0D	0x21
VDD1_OP_REG	RW	8	0x33	0x22
VDD1_SR_REG	RW	8	0x33	0x23
VDD2_REG	RW	8	0x0D	0x24
VDD2_OP_REG	RW	8	0x4B	0x25
VDD2_SR_REG	RW	8	0x4B	0x26
VDDCRTL_REG	RW	8	0x00	0x27
VDDCRTL_OP_REG	RW	8	0x03	0x28
VDDCRTL_SR_REG	RW	8	0x03	0x29
LDO1_REG	RW	8	0x15	0x30
LDO2_REG	RW	8	0x15	0x31
LDO5_REG	RW	8	0x00	0x32
LDO8_REG	RW	8	0x09	0x33
LDO7_REG	RW	8	0x0D	0x34
LDO6_REG	RW	8	0x21	0x35
LDO4_REG	RW	8	0x00	0x36

(1) Register reset values are for fixed boot mode.

Copyright © 2010–2018, Texas Instruments Incorporated

Table 6-6. TPS65911_FUNC_REG Register Summary[(1)] (continued)

Register Name	Type	Register Width (Bits)	Register Reset	Address Offset
LD03_REG	RW	8	0x00	0x37
THERM_REG	RW	8	0x0D	0x38
BBCH_REG	RW	8	0x00	0x39
DCDCCTRL_REG	RW	8	0x39	0x3E
DEVCTRL_REG	RW	8	0x0000 0014	0x3F
DEVCTRL2_REG	RW	8	0x0000 0036	0x40
SLEEP_KEEP_LDO_ON_REG	RW	8	0x00	0x41
SLEEP_KEEP_RES_ON_REG	RW	8	0x00	0x42
SLEEP_SET_LDO_OFF_REG	RW	8	0x00	0x43
SLEEP_SET_RES_OFF_REG	RW	8	0x00	0x44
EN1_LDO_ASS_REG	RW	8	0x00	0x45
EN1_SMPS_ASS_REG	RW	8	0x00	0x46
EN2_LDO_ASS_REG	RW	8	0x00	0x47
EN2_SMPS_ASS_REG	RW	8	0x00	0x48
INT_STS_REG	RW	8	0x06	0x50
INT_MSK_REG	RW	8	0xFF	0x51
INT_STS2_REG	RW	8	0xA8	0x52
INT_MSK2_REG	RW	8	0xFF	0x53
INT_STS3_REG	RW	8	0x5A	0x54
INT_MSK3_REG	RW	8	0xFF	0x55
GPIO0_REG	RW	8	0x07	0x60
GPIO1_REG	RW	8	0x08	0x61
GPIO2_REG	RW	8	0x08	0x62
GPIO3_REG	RW	8	0x08	0x63
GPIO4_REG	RW	8	0x08	0x64
GPIO5_REG	RW	8	0x08	0x65
GPIO6_REG	RW	8	0x05	0x66
GPIO7_REG	RW	8	0x05	0x67
GPIO8_REG	RW	8	0x08	0x68
WATCHDOG_REG	RW	8	0x07	0x69
VMBCH_REG	RW	8	0x1E	0x6A
VMBCH2_REG	RW	8	0x00	0x6B
LED_CTRL1_REG	RW	8	0x00	0x6C
LED_CTRL2_REG1	RW	8	0x00	0x6D
PWM_CTRL1_REG	RW	8	0x00	0x6E
PWM_CTRL2_REG	RW	8	0x00	0x6F
SPARE_REG	RW	8	0x00	0x70
VERNUM_REG	RO	8	0x00	0x80

Copyright © 2010–2018, Texas Instruments Incorporated

6.15.1.2 TPS65911_FUNC_REG Register Descriptions

Table 6-7. SECONDS_REG

Address Offset	0x00
Instance	Reset Domain: FULL RESET
Description	RTC register for seconds
Type	RW

7	6	5	4	3	2	1	0
Reserved	SEC1			SEC0			

Bits	Field Name	Description	Type	Reset
7	Reserved	Reserved bit	RO R returns 0s	0
6:4	SEC1	Second digit of seconds (range is 0 up to 5)	RW	0x0
3:0	SEC0	First digit of seconds (range is 0 up to 9)	RW	0x0

Table 6-8. MINUTES_REG

Address Offset	0x01
Instance	Reset Domain: FULL RESET
Description	RTC register for minutes
Type	RW

7	6	5	4	3	2	1	0
Reserved	MIN1			MIN0			

Bits	Field Name	Description	Type	Reset
7	Reserved	Reserved bit	RO R returns 0s	0
6:4	MIN1	Second digit of minutes (range is 0 up to 5)	RW	0x0
3:0	MIN0	First digit of minutes (range is 0 up to 9)	RW	0x0

Copyright © 2010–2018, Texas Instruments Incorporated

Table 6-9. HOURS_REG

Address Offset	0x02
Instance	Reset Domain: FULL RESET
Description	RTC register for hours
Type	RW

7	6	5	4	3	2	1	0
PM_NAM	Reserved	HOUR1		HOUR0			

Bits	Field Name	Description	Type	Reset
7	PM_NAM	Only used in PM_AM mode (otherwise it is set to 0) 0 is AM 1 is PM	RW	0
6	Reserved	Reserved bit	RO R returns 0s	0
5:4	HOUR1	Second digit of hours(range is 0 up to 2)	RW	0x0
3:0	HOUR0	First digit of hours (range is 0 up to 9)	RW	0x0

Table 6-10. DAYS_REG

Address Offset	0x03
Instance	Reset Domain: FULL RESET
Description	RTC register for days
Type	RW

7	6	5	4	3	2	1	0
Reserved		DAY1		DAY0			

Bits	Field Name	Description	Type	Reset
7:6	Reserved	Reserved bit	RO R returns 0s	0x0
5:4	DAY1	Second digit of days (range is 0 up to 3)	RW	0x0
3:0	DAY0	First digit of days (range is 0 up to 9)	RW	0x1

Table 6-11. MONTHS_REG

Address Offset	0x04
Instance	Reset Domain: FULL RESET
Description	RTC register for months
Type	RW

7	6	5	4	3	2	1	0
Reserved			MONTH1	MONTH0			

Bits	Field Name	Description	Type	Reset
7:5	Reserved	Reserved bit	RO R returns 0s	0x0
4	MONTH1	Second digit of months (range is 0 up to 1)	RW	0
3:0	MONTH0	First digit of months (range is 0 up to 9)	RW	0x1

Copyright © 2010–2018, Texas Instruments Incorporated

Table 6-12. YEARS_REG

Address Offset	0x05
Instance	Reset Domain: FULL RESET
Description	RTC register for day of the week
Type	RW

7	6	5	4	3	2	1	0
YEAR1				YEAR0			

Bits	Field Name	Description	Type	Reset
7:4	YEAR1	Second digit of years (range is 0 up to 9)	RW	0x0
3:0	YEAR0	First digit of years (range is 0 up to 9)	RW	0x0

Table 6-13. WEEKS_REG

Address Offset	0x06
Instance	Reset Domain: FULL RESET
Description	RTC register for day of the week
Type	RW

7	6	5	4	3	2	1	0
Reserved					WEEK		

Bits	Field Name	Description	Type	Reset
7:3	Reserved	Reserved bit	RO R returns 0s	0x00
2:0	WEEK	First digit of day of the week (range is 0 up to 6)	RW	0

Table 6-14. ALARM_SECONDS_REG

Address Offset	0x08
Instance	Reset Domain: FULL RESET
Description	RTC register for alarm programmation for seconds
Type	RW

7	6	5	4	3	2	1	0
Reserved	ALARM_SEC1			ALARM_SEC0			

Bits	Field Name	Description	Type	Reset
7	Reserved	Reserved bit	RO R returns 0s	0
6:4	ALARM_SEC1	Second digit of alarm programmation for seconds (range is 0 up to 5)	RW	0x0
3:0	ALARM_SEC0	First digit of alarm programmation for seconds (range is 0 up to 9)	RW	0x0

Copyright © 2010–2018, Texas Instruments Incorporated

Table 6-15. ALARM_MINUTES_REG

Address Offset	0x09
Instance	Reset Domain: FULL RESET
Description	RTC register for alarm programmation for minutes
Type	RW

7	6	5	4	3	2	1	0
Reserved	ALARM_MIN1			ALARM_MIN0			

Bits	Field Name	Description	Type	Reset
7	Reserved	Reserved bit	RO R returns 0s	0
6:4	ALARM_MIN1	Second digit of alarm programmation for minutes (range is 0 up to 5)	RW	0x0
3:0	ALARM_MIN0	First digit of alarm programmation for minutes (range is 0 up to 9)	RW	0x0

Table 6-16. ALARM_HOURS_REG

Address Offset	0x0A
Instance	Reset Domain: FULL RESET
Description	RTC register for alarm programmation for hours
Type	RW

7	6	5	4	3	2	1	0
ALARM_PM_NAM	Reserved	ALARM_HOUR1		ALARM_HOUR0			

Bits	Field Name	Description	Type	Reset
7	ALARM_PM_NAM	Only used in PM_AM mode for alarm programmation (otherwise it is set to 0) 0 is AM 1 is PM	RW	0
6	Reserved	Reserved bit	RO R returns 0s	0
5:4	ALARM_HOUR1	Second digit of alarm programmation for hours(range is 0 up to 2)	RW	0x0
3:0	ALARM_HOUR0	First digit of alarm programmation for hours (range is 0 up to 9)	RW	0x0

Table 6-17. ALARM_DAYS_REG

Address Offset	0x0B
Instance	Reset Domain: FULL RESET
Description	RTC register for alarm programmation for days
Type	RW

7	6	5	4	3	2	1	0
Reserved		ALARM_DAY1		ALARM_DAY0			

Bits	Field Name	Description	Type	Reset
7:6	Reserved	Reserved bit	RO R Special	0x0
5:4	ALARM_DAY1	Second digit of alarm programmation for days (range is 0 up to 3)	RW	0x0
3:0	ALARM_DAY0	First digit of alarm programmation for days (range is 0 up to 9)	RW	0x1

Copyright © 2010–2018, Texas Instruments Incorporated

Table 6-18. ALARM_MONTHS_REG

Address Offset	0x0C
Instance	Reset Domain: FULL RESET
Description	RTC register for alarm programmation for months
Type	RW

7	6	5	4	3	2	1	0
Reserved			ALARM_ MONTH1	ALARM_MONTH0			

Bits	Field Name	Description	Type	Reset
7:5	Reserved	Reserved bit	RO R returns 0s	0x0
4	ALARM_MONTH1	Second digit of alarm programmation for months (range is 0 up to 1)	RW	0
3:0	ALARM_MONTH0	First digit of alarm programmation for months (range is 0 up to 9)	RW	0x1

Table 6-19. ALARM_YEARS_REG

Address Offset	0x0D
Instance	Reset Domain: FULL RESET
Description	RTC register for alarm programmation for years
Type	RW

7	6	5	4	3	2	1	0
ALARM_YEAR1				ALARM_YEAR0			

Bits	Field Name	Description	Type	Reset
7:4	ALARM_YEAR1	Second digit of alarm programmation for years (range is 0 up to 9)	RW	0x0
3:0	ALARM_YEAR0	First digit of alarm programmation for years (range is 0 up to 9)	RW	0x0

Copyright © 2010–2018, Texas Instruments Incorporated

Table 6-20. RTC_CTRL_REG

Address Offset	0x10
Instance	Reset Domain: FULL RESET
Description	RTC control register: NOTES: A dummy read of this register is necessary before each I^2C read in order to update the ROUND_30S bit value.
Type	RW

7	6	5	4	3	2	1	0
RTC_V_OPT	GET_TIME	SET_32_ COUNTER	TEST_MODE	MODE_12_24	AUTO_COMP	ROUND_30S	STOP_RTC

Bits	Field Name	Description	Type	Reset
7	RTC_V_OPT	RTC date/time register selection: 0: Read access directly to dynamic registers (SECONDS_REG, MINUTES_REG, HOURS_REG, DAYS_REG, MONTHS_REG, YEAR_REG, WEEKS_REG) 1: Read access to static shadowed registers: (see GET_TIME bit).	RW	0
6	GET_TIME	When writing a 1 into this register, the content of the dynamic registers (SECONDS_REG, MINUTES_REG, HOURS_REG, DAYS_REG, MONTHS_REG, YEAR_REG and WEEKS_REG) is transferred into static shadowed registers. Each update of the shadowed registers needs to be done by re-asserting GET_TIME bit to 1 (that is: reset it to 0 and then rewrite it to 1)	RW	0
5	SET_32_COUNTER	0: No action 1: set the 32-kHz counter with COMP_REG value. It must only be used when the RTC is frozen.	RW	0
4	TEST_MODE	0: functional mode 1: test mode (Auto compensation is enable when the 32-kHz counter reaches at its end)	RW	0
3	MODE_12_24	0: 24 hours mode 1: 12 hours mode (PM-AM mode) It is possible to switch between the two modes at any time without disturbed the RTC, read or write are always performed with the current mode.	RW	0
2	AUTO_COMP	0: No auto compensation 1: Auto compensation enabled	RW	0
1	ROUND_30S	0: No update 1: When a one is written, the time is rounded to the nearest minute. This bit is a toggle bit, the microcontroller can only write one and RTC clears it. If the microcontroller sets the ROUND_30S bit and then reads it, the microcontroller will read one until rounded to the nearest value.	RW	0
0	STOP_RTC	0: RTC is frozen 1: RTC is running	RW	0

Table 6-21. RTC_STATUS_REG

Address Offset	0x11
Instance	Reset Domain: FULL RESET
Description	RTC status register: NOTES: A dummy read of this register is necessary before each I^2C read in order to update the status register value.
Type	RW

7	6	5	4	3	2	1	0
POWER_UP	ALARM	EVENT_1D	EVENT_1H	EVENT_1M	EVENT_1S	RUN	Reserved

Bits	Field Name	Description	Type	Reset
7	POWER_UP	Indicates that a reset occurred (bit cleared to 0 by writing 1). POWER_UP is set by a reset, is cleared by writing one in this bit.	RW	1
6	ALARM	Indicates that an alarm interrupt has been generated (bit clear by writing 1). The alarm interrupt keeps its low level, until the microcontroller write 1 in the ALARM bit of the RTC_STATUS_REG register. The timer interrupt is a low-level pulse (15 µs duration).	RW	0
5	EVENT_1D	One day has occurred	RO	0
4	EVENT_1H	One hour has occurred	RO	0
3	EVENT_1M	One minute has occurred	RO	0
2	EVENT_1S	One second has occurred	RO	0
1	RUN	0: RTC is frozen 1: RTC is running This bit shows the real state of the RTC, indeed because of STOP_RTC signal was resynchronized on 32-kHz clock, the action of this bit is delayed.	RO	0
0	Reserved	Reserved bit	RO R returns 0s	0

Copyright © 2010–2018, Texas Instruments Incorporated

Table 6-22. RTC_INTERRUPTS_REG

Address Offset	0x12
Instance	Reset Domain: FULL RESET
Description	RTC interrupt control register
Type	RW

7	6	5	4	3	2	1	0
Reserved			IT_SLEEP_ MASK_EN	IT_ALARM	IT_TIMER	EVERY	

Bits	Field Name	Description	Type	Reset
7:5	Reserved	Reserved bit	RO R returns 0s	0x0
4	IT_SLEEP_MASK_EN	1: Mask periodic interrupt while the TPS65911 device is in SLEEP mode. Interrupt event is back up in a register and occurred as soon as the TPS65911 device is no more in SLEEP mode. 0: Normal mode, no interrupt masked	RW	0
3	IT_ALARM	Enable one interrupt when the alarm value is reached (TC ALARM registers) by the TC registers	RW	0
2	IT_TIMER	Enable periodic interrupt 0: interrupt disabled 1: interrupt enabled	RW	0
1:0	EVERY	Interrupt period 00: each second 01: each minute 10: each hour 11: each day	RW	0x0

Table 6-23. RTC_COMP_LSB_REG

Address Offset	0x13
Instance	Reset Domain: FULL RESET
Description	RTC compensation register (LSB) Notes: This register must be written in 2-complement. This means that to add one 32-kHz oscillator period each hour, microcontroller needs to write FFFF into RTC_COMP_MSB_REG and RTC_COMP_LSB_REG. To remove one 32-kHz oscillator period each hour, microcontroller needs to write 0001 into RTC_COMP_MSB_REG and RTC_COMP_LSB_REG. The 7FFF value is forbidden.
Type	RW

7	6	5	4	3	2	1	0
RTC_COMP_LSB							

Bits	Field Name	Description	Type	Reset
7:0	RTC_COMP_LSB	This register contains the number of 32-kHz periods to be added into the 32-kHz counter each hour [LSB]	RW	0x00

Table 6-24. RTC_COMP_MSB_REG

Address Offset	0x14
Instance	Reset Domain: FULL RESET
Description	RTC compensation register (MSB) Notes: See RTC_COMP_LSB_REG Notes.
Type	RW

7	6	5	4	3	2	1	0
RTC_COMP_MSB							

Bits	Field Name	Description	Type	Reset
7:0	RTC_COMP_MSB	This register contains the number of 32-kHz periods to be added into the 32-kHz counter each hour [MSB]	RW	0x00

Table 6-25. RTC_RES_PROG_REG

Address Offset	0x15
Instance	Reset Domain: FULL RESET
Description	RTC register containing oscillator resistance value
Type	RW

7	6	5	4	3	2	1	0
Reserved		SW_RES_PROG					

Bits	Field Name	Description	Type	Reset
7:6	Reserved	Reserved bit	RO R returns 0s	0x0
5:0	SW_RES_PROG	Value of the oscillator resistance	RW	0x27

Table 6-26. RTC_RESET_STATUS_REG

Address Offset	0x16
Instance	Reset Domain: FULL RESET
Description	RTC register for reset status
Type	RW

7	6	5	4	3	2	1	0
Reserved							RESET_ STATUS

Bits	Field Name	Description	Type	Reset
7:1	Reserved	Reserved bit	RO R returns 0s	0x0
0	RESET_STATUS	This bit can only be set to one and is cleared when a manual reset or a POR (VBAT < 2.1) occurs. If this bit is reset it means that the RTC has lost its configuration.	RW	0

Copyright © 2010–2018, Texas Instruments Incorporated

Table 6-27. BCK1_REG

Address Offset	0x17
Instance	Reset Domain: FULL RESET
Description	Backup register which can be used for storage by the application firmware when the external host is powered down. These registers will retain their content as long as the VRTC is active.
Type	RW

7	6	5	4	3	2	1	0
BCKUP							

Bits	Field Name	Description	Type	Reset
7:0	BCKUP	Backup bit	RW	0x00

Table 6-28. BCK2_REG

Address Offset	0x18
Instance	Reset Domain: FULL RESET
Description	Backup register which can be used for storage by the application firmware when the external host is powered down. These registers will retain their content as long as the VRTC is active.
Type	RW

7	6	5	4	3	2	1	0
BCKUP							

Bits	Field Name	Description	Type	Reset
7:0	BCKUP	Backup bit	RW	0x00

Table 6-29. BCK3_REG

Address Offset	0x19
Instance	Reset Domain: FULL RESET
Description	Backup register which can be used for storage by the application firmware when the external host is powered down. These registers will retain their content as long as the VRTC is active.
Type	RW

7	6	5	4	3	2	1	0
BCKUP							

Bits	Field Name	Description	Type	Reset
7:0	BCKUP	Backup bit	RW	0x00

Table 6-30. BCK4_REG

Address Offset	0x1A
Instance	Reset Domain: FULL RESET
Description	Backup register which can be used for storage by the application firmware when the external host is powered down. These registers will retain their content as long as the VRTC is active.
Type	RW

7	6	5	4	3	2	1	0
BCKUP							

Bits	Field Name	Description	Type	Reset
7:0	BCKUP	Backup bit	RW	0x00

Table 6-31. BCK5_REG

Address Offset	0x1B
Instance	Reset Domain: FULL RESET
Description	Backup register which can be used for storage by the application firmware when the external host is powered down. These registers will retain their content as long as the VRTC is active.
Type	RW

7	6	5	4	3	2	1	0
BCKUP							

Bits	Field Name	Description	Type	Reset
7:0	BCKUP	Backup bit	RW	0x00

Copyright © 2010–2018, Texas Instruments Incorporated

Table 6-32. PUADEN_REG

Address Offset	0x1C
Instance	Reset Domain: GENERAL RESET
Description	Pullup/pulldown control register.
Type	RW

7	6	5	4	3	2	1	0
Reserved	I2CCTLP	I2CSRP	PWRONP	SLEEPP	PWRHOLDP	HDRSTP	NRESPWRON 2P

Bits	Field Name	Description	Type	Reset
7	Reserved		RO	0
6	I2CCTLP	SDACTL and SCLCTL pullup control: 1: Pullup is enabled 0: Pullup is disabled	RW	0
5	I2CSRP	SDASR and SCLSR pullup control: 1: Pullup is enabled 0: Pullup is disabled	RW	0
4	PWRONP	PWRON pad pullup control: 1: Pullup is enabled 0: Pullup is disabled	RW	1
3	SLEEPP	SLEEP pad pulldown control: 1: Pulldown is enabled 0: Pulldown is disabled	RW	1
2	PWRHOLDP	PWRHOLD pad pulldown control: 1: Pulldown is enabled 0: Pulldown is disabled	RW	1
1	HDRSTP	HDRST pad pulldown control: 1: Pulldown is enabled 0: Pulldown is disabled	RW	1
0	NRESPWRON2P	NRESPWRON2 pad control: 1: Pulldown is enabled 0: Pulldown is disabled	RW	1

Table 6-33. REF_REG

Address Offset	0x1D
Instance	Reset Domain: TURNOFF OFF RESET
Description	Reference control register
Type	RO

7	6	5	4	3	2	1	0
Reserved						ST	

Bits	Field Name	Description	Type	Reset
7:2	Reserved	Reserved bit	RO R returns 0s	0x00
1:0	ST	Reference state: ST[1:0] = 00: Off ST[1:0] = 01: On high power (ACTIVE) ST[1:0] = 10: Reserved ST[1:0] = 11: On low power (SLEEP) (Write access available in test mode only)	RO	0x1

Table 6-34. VRTC_REG

Address Offset	0x1E
Instance	Reset Domain: GENERAL RESET
Description	VRTC internal regulator control register
Type	RW

7	6	5	4	3	2	1	0
Reserved				VRTC_ OFFMASK	Reserved	ST	

Bits	Field Name	Description	Type	Reset
7:4	Reserved	Reserved bit	RO R returns 0s	0x0
3	VRTC_OFFMASK	VRTC internal regulator off mask signal: when 1, the regulator keeps its full-load capability during device OFF state. when 0, the regulator will go to low-power mode during device OFF state. Note that VRTC is put in low-power mode when the device is on backup even if this bit is set to 1 (Default value: See boot configuration)	RW	0
2	Reserved	Reserved bit	RO R returns 0s	0
1:0	ST	Reference state: ST[1:0] = 00: Reserved ST[1:0] = 01: On high power (ACTIVE) ST[1:0] = 10: Reserved ST[1:0] = 11: On low power (SLEEP) (Write access available in test mode only)	RO	0x1

Copyright © 2010–2018, Texas Instruments Incorporated

Table 6-35. VIO_REG

Address Offset	0x20
Instance	Reset Domain: TURNOFF OFF RESET
Description	VIO control register
Type	RW

7	6	5	4	3	2	1	0
ILMAX		Reserved		SEL		ST	

Bits	Field Name	Description	Type	Reset
7:6	ILMAX	Select maximum load current: when 00: 0.6 A when 01: 1.0 A when 10: 1.3 A when 11: 1.3 A	RW	0x0
5:4	Reserved	Reserved bit	RO R returns 0s	0x0
3:2	SEL	Output voltage selection (EEPROM bits): SEL[1:0] = 00: 1.5 V SEL[1:0] = 01: 1.8 V SEL[1:0] = 10: 2.5 V SEL[1:0] = 11: 3.3 V (Default value: See boot configuration)	RW	0x0
1:0	ST	Supply state (EEPROM bits): ST[1:0] = 00: Off ST[1:0] = 01: On high power (ACTIVE) ST[1:0] = 10: Off ST[1:0] = 11: On low power (SLEEP)	RW	0x0

Table 6-36. VDD1_REG

Address Offset	0x21
Instance	Reset Domain: TURNOFF OFF RESET
Description	VDD1 control register
Type	RW

7	6	5	4	3	2	1	0
VGAIN_SEL		ILMAX	TSTEP			ST	

Bits	Field Name	Description	Type	Reset
7:6	VGAIN_SEL	Select output voltage multiplication factor: G (EEPROM bits): when 00: ×1 when 01: ×1 when 10: ×2 when 11: ×3 (Default value: See boot configuration)	RW	0x0
5	ILMAX	Select maximum load current: when 0: 1.0 A when 1: > 1.5 A	RW	0
4:2	TSTEP	Time step: when changing the output voltage, the new value is reached through successive 12.5-mV voltage steps (if not bypassed). The equivalent programmable slew rate of the output voltage is then: TSTEP[2:0] = 000: step duration is 0, step function is bypassed TSTEP[2:0] = 001: 12.5 mV/µs (sampling 3 MHz) TSTEP[2:0] = 010: 9.4 mV/µs (sampling 3 MHz × 3/4) TSTEP[2:0] = 011: 7.5 mV/µs (sampling 3 MHz × 3/5) (default) TSTEP[2:0] = 100: 6.25 mV/µs(sampling 3 MHz/2) TSTEP[2:0] = 101: 4.7 mV/µs(sampling 3 MHz/3) TSTEP[2:0] = 110: 3.12 mV/µs(sampling 3 MHz/4) TSTEP[2:0] = 111: 2.5 mV/µs(sampling 3 MHz/5)	RW	0x3
1:0	ST	Supply state (EEPROM bits): ST[1:0] = 00: Off ST[1:0] = 01: On, high-power mode ST[1:0] = 10: Off ST[1:0] = 11: On, low-power mode	RW	0x0

Copyright © 2010–2018, Texas Instruments Incorporated

Table 6-37. VDD1_OP_REG

Address Offset	0x22
Instance	Reset Domain: TURNOFF OFF RESET
Description	VDD1 voltage selection register. This register can be accessed by both control and voltage scaling I^2C interfaces depending on SR_CTL_I2C_SEL register bit value.
Type	RW

7	6	5	4	3	2	1	0
CMD	SEL						

Bits	Field Name	Description	Type	Reset
7	CMD	when 0: VDD1_OP_REG voltage is applied when 1: VDD1_SR_REG voltage is applied	RW	0
6:0	SEL	Output voltage (4 EEPROM bits) selection with GAIN_SEL = 00 (G = 1, 12.5 mV per LSB): SEL[6:0] = 1001011 to 1111111: 1.5 V ... SEL[6:0] = 0111111: 1.35 V ... SEL[6:0] = 0110011: 1.2 V ... SEL[6:0] = 0000001 to 0000011: 0.6 V SEL[6:0] = 0000000: Off (0.0 V) Note: from SEL[6:0] = 3 to 75 (dec) Vout = (SEL[6:0] × 12.5 mV + 0.5625 V) × G (Default value: See boot configuration) Note: Vout maximum value is 3.3 V	RW	0x00

Table 6-38. VDD1_SR_REG

Address Offset	0x23
Instance	Reset Domain: TURNOFF OFF RESET
Description	VDD1 voltage selection register. This register can be accessed by both control and voltage scaling dedicated I^2C interfaces depending on SR_CTL_I2C_SEL register bit value.
Type	RW

7	6	5	4	3	2	1	0
Reserved	SEL						

Bits	Field Name	Description	Type	Reset
7	Reserved	Reserved bit	RO R returns 0s	0
6:0	SEL	Output voltage selection with GAIN_SEL = 00 (G = 1, 12.5 mV per LSB): SEL[6:0] = 1001011 to 1111111: 1.5 V ... SEL[6:0] = 0111111: 1.35 V ... SEL[6:0] = 0110011: 1.2 V ... SEL[6:0] = 0000001 to 0000011: 0.6 V SEL[6:0] = 0000000: Off (0.0 V) Note: from SEL[6:0] = 3 to 75 (dec) Vout = (SEL[6:0] × 12.5 mV + 0.5625 V) × G (Default value: See boot configuration) Note: Vout maximum value is 3.3 V	RW	0x00

Table 6-39. VDD2_REG

Address Offset	0x24
Instance	Reset Domain: TURNOFF OFF RESET
Description	VDD2 control register
Type	RW

7	6	5	4	3	2	1	0
VGAIN_SEL		ILMAX	TSTEP			ST	

Bits	Field Name	Description	Type	Reset
7:6	VGAIN_SEL	Select output voltage multiplication factor (×1, ×3 included in EEPROM bits): G when 00: ×1 when 01: ×1 when 10: ×2 when 11: ×3	RW	0x0
5	ILMAX	Select maximum load current: when 0: 1.0 A when 1: > 1.5 A	RW	0
4:2	TSTEP	Time step: when changing the output voltage, the new value is reached through successive 12.5-mV voltage steps (if not bypassed). The equivalent programmable slew rate of the output voltage is then: TSTEP[2:0] = 000: step duration is 0, step function is bypassed TSTEP[2:0] = 001: 12.5 mV/µs (sampling 3 MHz) TSTEP[2:0] = 010: 9.4 mV/µs (sampling 3 MHz × 3/4) TSTEP[2:0] = 011: 7.5 mV/µs (sampling 3 MHz × 3/5) (default) TSTEP[2:0] = 100: 6.25 mV/µs(sampling 3 MHz/2) TSTEP[2:0] = 101: 4.7 mV/µs(sampling 3 MHz/3) TSTEP[2:0] = 110: 3.12 mV/µs(sampling 3 MHz/4) TSTEP[2:0] = 111: 2.5 mV/µs(sampling 3 MHz/5)	RW	0x1
1:0	ST	Supply state (EEPROM bits): ST[1:0] = 00: Off ST[1:0] = 01: On, high-power mode ST[1:0] = 10: Off ST[1:0] = 11: On, low-power mode	RW	0x0

Copyright © 2010–2018, Texas Instruments Incorporated

Table 6-40. VDD2_OP_REG

Address Offset	0x25
Instance	Reset Domain: TURNOFF OFF RESET
Description	VDD2 voltage selection register. This register can be accessed by both control and voltage scaling dedicated I^2C interfaces depending on SR_CTL_I2C_SEL register bit value.
Type	RW

7	6	5	4	3	2	1	0
CMD	SEL						

Bits	Field Name	Description	Type	Reset
7	CMD	Command: when 0: VDD2_OP_REG voltage is applied when 1: VDD2_SR_REG voltage is applied	RW	0
6:0	SEL	Output voltage (4 EEPROM bits) selection with GAIN_SEL = 00 (G = 1, 12.5 mV per LSB): SEL[6:0] = 1001011 to 1111111: 1.5 V ... SEL[6:0] = 0111111: 1.35 V ... SEL[6:0] = 0110011: 1.2 V ... SEL[6:0] = 0000001 to 0000011: 0.6 V SEL[6:0] = 0000000: Off (0.0 V) Note: from SEL[6:0] = 3 to 75 (dec) Vout = (SEL[6:0] × 12.5 mV + 0.5625 V) × G Note: Vout maximum value is 3.3 V	RW	0x00

Table 6-41. VDD2_SR_REG

Address Offset	0x26
Instance	Reset Domain: TURNOFF OFF RESET
Description	VDD2 voltage selection register. This register can be accessed by both control and voltage scaling dedicated I^2C interfaces depending on SR_CTL_I2C_SEL register bit value.
Type	RW

7	6	5	4	3	2	1	0
Reserved	SEL						

Bits	Field Name	Description	Type	Reset
7	Reserved	Reserved bit	RO R returns 0s	0
6:0	SEL	Output voltage (EEPROM bits) selection with GAIN_SEL = 00 (G = 1, 12.5 mV per LSB): SEL[6:0] = 1001011 to 1111111: 1.5 V ... SEL[6:0] = 0111111: 1.35 V ... SEL[6:0] = 0110011: 1.2 V ... SEL[6:0] = 0000001 to 0000011: 0.6 V SEL[6:0] = 0000000: Off (0.0 V) Note: from SEL[6:0] = 3 to 75 (dec) Vout = (SEL[6:0] × 12.5 mV + 0.5625 V) × G Note: Vout maximum value is 3.3 V	RW	0x00

Table 6-42. VDDCRTL_REG

Address Offset	0x27
Instance	Reset Domain: TURNOFF OFF RESET
Description	VDDCtrl, external FET controller
Type	RW

7	6	5	4	3	2	1	0
Reserved						ST	

Bits	Field Name	Description	Type	Reset
7:2	Reserved	Reserved bit	RO R returns 0s	0x00
1:0	ST	Supply state (EEPROM dependent): ST[1:0] = 00: Off ST[1:0] = 01: On ST[1:0] = 10: Off ST[1:0] = 11: On	RW	0x0

Table 6-43. VDDCRTL_OP_REG

Address Offset	0x28
Instance	Reset Domain: TURN OFF RESET
Description	VDDCtrl voltage selection register. This register can be accessed by both control and voltage scaling dedicated I^2C interfaces depending on SR_CTL_I2C_SEL register bit value.
Type	RW

7	6	5	4	3	2	1	0
CMD	SEL						

Bits	Field Name	Description	Type	Reset
7	CMD	Command: when 0: VDDctrl_OP_REG voltage is applied when 1: VDDctrl_SR_REG voltage is applied	RW	0
6:0	SEL	Output voltage (4 EEPROM bits) selection: SEL[6:0] = 1000011 to 1111111: 1.4 V ... SEL[6:0] = 0110011: 1.2 V ... SEL[6:0] = 0010011: 0.8 V ... SEL[6:0] = 0000001: 0000011 0.6 V SEL[6:0] = 0000000: Off (0.0 V) Note: from SEL[6:0] = 3 to 64 (dec) Vout = (SEL[6:0] × 12.5 mV + 0.5625 V) (Default value: See boot configuration)	RW	0x00

Copyright © 2010–2018, Texas Instruments Incorporated

Table 6-44. VDDCRTL_SR_REG

Address Offset	0x29
Instance	Reset Domain: TURN OFF RESET
Description	VDDCtrl voltage selection register. This register can be accessed by both control and voltage scaling dedicated I^2C interfaces depending on SR_CTL_I2C_SEL register bit value.
Type	RW

7	6	5	4	3	2	1	0
Reserved	SEL						

Bits	Field Name	Description	Type	Reset
7	Reserved		RO	0
6:0	SEL	Output voltage (4 EEPROM bits) selection: SEL[6:0] = 1000011 to 1111111: 1.4 V ... SEL[6:0] = 0110011: 1.2 V ... SEL[6:0] = 0010011: 0.8 V ... SEL[6:0] = 0000001: 0000011: 0.6 V SEL[6:0] = 0000000: Off (0.0 V) Note: from SEL[6:0] = 3 to 64 (dec) Vout = (SEL[6:0] × 12.5 mV + 0.5625 V) (Default value: See boot configuration)	RW	0x03

Table 6-45. LDO1_REG

Address Offset	0x30
Instance	Reset Domain: TURNOFF OFF RESET
Description	LDO1 regulator control register
Type	RW

7	6	5	4	3	2	1	0
SEL						ST	

Bits	Field Name	Description	Type	Reset
7:2	SEL	Supply voltage (EEPROM bits): SEL[7:2] = 000000 to 000011: 1 V SEL[7:2] = 000100: 1 V SEL[7:2] = 000101: 1.05 V ... SEL[7:2] = 110001: 3.25 V SEL[7:2] = 110010: 3.3 V (Default value: See boot configuration)	RW	0x0
1:0	ST	Supply state (EEPROM bits): ST[1:0] = 00: Off ST[1:0] = 01: On high power (ACTIVE) ST[1:0] = 10: Off ST[1:0] = 11: On low power (SLEEP)	RW	0x0

Copyright © 2010–2018, Texas Instruments Incorporated

Table 6-46. LDO2_REG

Address Offset	0x31
Instance	Reset Domain: TURNOFF OFF RESET
Description	LDO2 regulator control register
Type	RW

7	6	5	4	3	2	1	0
SEL						ST	

Bits	Field Name	Description	Type	Reset
7:2	SEL	Supply voltage (EEPROM bits): SEL[7:2] = 000000 to 000011: 1 V SEL[7:2] = 000100: 1 V SEL[7:2] = 000101: 1.05 V ... SEL[7:2] = 110001: 3.25 V SEL[7:2] = 110010: 3.3 V (Default value: See boot configuration)	RW	0x0
1:0	ST	Supply state (EEPROM bits): ST[1:0] = 00: Off ST[1:0] = 01: On high power (ACTIVE) ST[1:0] = 10: Off ST[1:0] = 11: On low power (SLEEP)	RW	0x0

Table 6-47. LDO5_REG

Address Offset	0x32
Instance	Reset Domain: TUROFF RESET
Description	LDO5 regulator control register
Type	RW

7	6	5	4	3	2	1	0
Reserved	SEL					ST	

Bits	Field Name	Description	Type	Reset
7	Reserved		RO R returns 0s	0
6:2	SEL	Supply voltage (EEPROM bits): SEL[6:2] = 00000 to 00010: 1 V SEL[6:2] = 00011: 1.1 V ... SEL[6:2] = 11000: 3.2 V SEL[6:2] = 11001: 3.3 V (Default value: See boot configuration)	RW	0x00
1:0	ST	Supply state (EEPROM bits): ST[1:0] = 00: Off ST[1:0] = 01: On high power (ACTIVE) ST[1:0] = 10: Off ST[1:0] = 11: On low power (SLEEP)	RW	0x0

Copyright © 2010–2018, Texas Instruments Incorporated

Table 6-48. LDO8_REG

Address Offset	0x33
Instance	Reset Domain: TURNOFF OFF RESET
Description	LDO8 regulator control register
Type	RW

7	6	5	4	3	2	1	0
Reserved	SEL					ST	

Bits	Field Name	Description	Type	Reset
7	Reserved		RO R returns 0s	0
6:2	SEL	Supply voltage (EEPROM bits): SEL[6:2] = 00000 to 00010: 1 V SEL[6:2] = 00011: 1.1 V ... SEL[6:2] = 11000: 3.2 V SEL[6:2] = 11001: 3.3 V (Default value: See boot configuration)	RW	0x00
1:0	ST	Supply state (EEPROM bits): ST[1:0] = 00: Off ST[1:0] = 01: On high power (ACTIVE) ST[1:0] = 10: Off ST[1:0] = 11: On low power (SLEEP)	RW	0x0

Table 6-49. LDO7_REG

Address Offset	0x34
Instance	Reset Domain: TURNOFF OFF RESET
Description	LDO7 regulator control register
Type	RW

7	6	5	4	3	2	1	0
Reserved	SEL					ST	

Bits	Field Name	Description	Type	Reset
7	Reserved		RO R returns 0s	0
6:2	SEL	Supply voltage (EEPROM bits): SEL[6:2] = 00000 to 00010: 1 V SEL[6:2] = 00011: 1.1 V ... SEL[6:2] = 11000: 3.2 V SEL[6:2] = 11001: 3.3 V (Default value: See boot configuration)	RW	0x00
1:0	ST	Supply state (EEPROM bits): ST[1:0] = 00: Off ST[1:0] = 01: On high power (ACTIVE) ST[1:0] = 10: Off ST[1:0] = 11: On low power (SLEEP)	RW	0x0

Copyright © 2010–2018, Texas Instruments Incorporated

Table 6-50. LDO6_REG

Address Offset	0x35
Instance	Reset Domain: TURNOFF OFF RESET
Description	LDO6 regulator control register
Type	RW

7	6	5	4	3	2	1	0
Reserved	SEL					ST	

Bits	Field Name	Description	Type	Reset
7	Reserved		RO R returns 0s	0
6:2	SEL	Supply voltage (EEPROM bits): SEL[6:2] = 00000 to 00010: 1 V SEL[6:2] = 00011: 1.1 V ... SEL[6:2] = 11000: 3.2 V SEL[6:2] = 11001: 3.3 V (Default value: See boot configuration)	RW	0x00
1:0	ST	Supply state (EEPROM bits): ST[1:0] = 00: Off ST[1:0] = 01: On high power (ACTIVE) ST[1:0] = 10: Off ST[1:0] = 11: On low power (SLEEP)	RW	0x0

Table 6-51. LDO4_REG

Address Offset	0x36
Instance	Reset Domain: TURNOFF OFF RESET
Description	LDO4 regulator control register
Type	RW

7	6	5	4	3	2	1	0
SEL						ST	

Bits	Field Name	Description	Type	Reset
7:2	SEL	Supply voltage (EEPROM bits): SEL[7:2] = 000000: 0.8 V SEL[7:2] = 000001: 0.85 V SEL[7:2] = 000010: 0.9 V SEL[7:2] = 000011: 0.95 V SEL[7:2] = 000100: 1 V SEL[7:2] = 000101: 1.05 V ... SEL[7:2] = 110001: 3.25 V SEL[7:2] = 110010: 3.3 V Applicable voltage selection TRACK LDO 0: 1 V to 3.3 V TRACK LDO 1: 0.8 V to 1.5 V (Default value: See boot configuration)	RW	0x00
1:0	ST	Supply state (EEPROM bits): ST[1:0] = 00: Off ST[1:0] = 01: On high power (ACTIVE) ST[1:0] = 10: Off ST[1:0] = 11: On low power (SLEEP)	RW	0x0

Copyright © 2010–2018, Texas Instruments Incorporated

Table 6-52. LDO3_REG

Address Offset	0x37
Instance	Reset Domain: TURNOFF OFF RESET
Description	LDO3 regulator control register
Type	RW

7	6	5	4	3	2	1	0
Reserved	SEL					ST	

Bits	Field Name	Description	Type	Reset
7	Reserved		RO R returns 0s	0
6:2	SEL	Supply voltage (EEPROM bits): SEL[6:2] = 00000: 1 V SEL[6:2] = 00001: 1 V SEL[6:2] = 00010: 1 V SEL[6:2] = 00011: 1.1 V ... SEL[6:2] = 11000: 3.2 V SEL[6:2] = 11001: 3.3 V (Default value: See boot configuration)	RW	0x00
1:0	ST	Supply state (EEPROM bits): ST[1:0] = 00: Off ST[1:0] = 01: On high power (ACTIVE) ST[1:0] = 10: Off ST[1:0] = 11: On low power (SLEEP)	RW	0x0

Table 6-53. Therm_REG

Address Offset	0x38
Instance	Reset Domain: bits[5:2]: GENERAL RESET bit[0]: TURNOFF OFF RESET
Description	Thermal control register
Type	RW

7	6	5	4	3	2	1	0
Reserved		THERM_HD	THERM_TS	THERM_HDSEL		Reserved	THERM_STATE

Bits	Field Name	Description	Type	Reset
7:6	Reserved	Reserved bit	RO R returns 0s	0x0
5	THERM_HD	Hot die detector output: when 0: the hot die threshold is not reached when 1: the hot die threshold is reached	RO	0
4	THERM_TS	Thermal shutdown detector output: when 0: the thermal shutdown threshold is not reached when 1: the thermal shutdown threshold is reached	RO	0
3:2	THERM_HDSEL	Temperature selection for hot die detector: when 00: Low temperature threshold … when 11: High temperature threshold	RW	0x3
1	Reserved		RO R returns 0s	0
0	THERM_STATE	Thermal shutdown module enable signal: when 0: thermal shutdown module is disable when 1: thermal shutdown module is enable	RW	1

Table 6-54. BBCH_REG

Address Offset	0x39
Instance	Reset Domain: GENERAL RESET
Description	Backup battery charger control register
Type	RW

7	6	5	4	3	2	1	0
Reserved					BBSEL		BBCHEN

Bits	Field Name	Description	Type	Reset
7:3	Reserved	Reserved bit	RO R returns 0s	0x00
2:1	BBSEL	Back up battery charge voltage selection: BBSEL[1:0] = 00: 3.0 V BBSEL[1:0] = 01: 2.52 V BBSEL[1:0] = 10: 3.15 V BBSEL[1:0] = 11: VBAT	RW	0x0
0	BBCHEN	Back up battery charge enable	RW	0

Copyright © 2010–2018, Texas Instruments Incorporated

Table 6-55. DCDCCTRL_REG

Address Offset	0x3E
Instance	RESET DOMAIN: bits [7:3]: TURNOFF OFF RESET bits [2:0]: GENERAL RESET
Description	DCDC control register
Type	RW

7	6	5	4	3	2	1	0
Reserved	TRACK	VDD2_PSKIP	VDD1_PSKIP	VIO_PSKIP	DCDCCKEXT	DCDCCKSYNC	

Bits	Field Name	Description	Type	Reset
7	Reserved	Reserved bit	RO R returns 0s	0
6	TRACK	0 = Normal LDO operation without tracking 1 = Tracking mode: LDO4 output follows VDD1 setting when VDD1 active. See Section 6.5.3.14 for more information.	RW	0
5	VDD2_PSKIP	VDD2 pulse skip mode enable (EEPROM bit) Default value: See boot configuration	RW	1
4	VDD1_PSKIP	VDD1 pulse skip mode enable (EEPROM bit) Default value: See boot configuration	RW	1
3	VIO_PSKIP	VIO pulse skip mode enable (EEPROM bit) Default value: See boot configuration	RW	1
2	DCDCCKEXT	This signal control the muxing of the GPIO2 pad: When 0: this pad is a GPIO When 1: this pad is used as input for an external clock used for the synchronisation of the DCDCs	RW	0
1:0	DCDCCKSYNC	DCDC clock configuration: DCDCCKSYNC[1:0] = 00: no synchronization of DCDC clocks DCDCCKSYNC[1:0] = 01: DCDC synchronous clock with phase shift DCDCCKSYNC[1:0] = 10: no synchronization of DCDC clocks DCDCCKSYNC[1:0] = 11: DCDC synchronous clock	RW	0x1

Table 6-56. DEVCTRL_REG

Address Offset	0x3F
Instance	Reset Domain: GENERAL RESET Bit 0,1, and 3: TURN OFF RESET
Description	Device control register
Type	RW

7	6	5	4	3	2	1	0
PWR_OFF_SEQ	RTC_PWDN	CK32K_CTRL	SR_CTL_I2C_SEL	DEV_OFF_RST	DEV_ON	DEV_SLP	DEV_OFF

Bits	Field Name	Description	Type	Reset
7	PWR_OFF_SEQ	When 1, power-off will be sequential, reverse of power-on sequence (first resource to power on will be the last to power off). When 0, all resources disabled at the same time	RW	0
6	RTC_PWDN	When 1, disable the RTC digital domain (clock gating and reset of RTC registers and logic). This register bit is not reset in BACKUP state.	RW	0
5	CK32K_CTRL	Internal 32-kHz clock source control bit (EEPROM bit): when 0, the internal 32-kHz clock source is the crystal oscillator or an external 32-kHz clock in case the crystal oscillator is used in bypass mode when 1, the internal 32-kHz clock source is the RC oscillator.	RW	0
4	SR_CTL_I2C_SEL	Voltage scaling registers access control bit: when 0: access to registers by voltage scaling I^2C when 1: access to registers by control I^2C. The voltage scaling registers are: VDD1_OP_REG, VDD1_SR_REG, VDD2_OP_REG, VDD2_SR_REG, VDDCtrl_OP_REG, and VDDCtrl_SR_REG.	RW	1
3	DEV_OFF_RST	Write 1 will start an ACTIVE-to-OFF or SLEEP-to-OFF device state transition (switch-off event) and activate reset of the digital core. This bit is cleared in OFF state.	RW	0
2	DEV_ON	Write 1 will keep the device on (ACTIVE or SLEEP device state) (if DEV_OFF = 0 and DEV_OFF_RST = 0). EEPROM bit (Default value: See boot configuration)	RW	0
1	DEV_SLP	Write 1 allows SLEEP device state (if DEV_OFF = 0 and DEV_OFF_RST = 0). Write 0 will start an SLEEP-to-ACTIVE device state transition (wake-up event) (if DEV_OFF = 0 and DEV_OFF_RST = 0). This bit is cleared in OFF state.	RW	0
0	DEV_OFF	Write 1 will start an ACTIVE-to-OFF or SLEEP-to-OFF device state transition (switch-off event). This bit is cleared in OFF state.	RW	0

Copyright © 2010–2018, Texas Instruments Incorporated

Table 6-57. DEVCTRL2_REG

Address Offset	0x40
Instance	Reset Domain: GENERAL RESET TSLOT_LENGTH: TURN OFF RESET
Description	Device control register
Type	RW

7	6	5	4	3	2	1	0
Reserved	DCDC_SLEEP_LVL	TSLOT_LENGTH		SLEEPSIG_POL	PWON_LP_OFF	PWON_LP_RST	IT_POL

Bits	Field Name	Description	Type	Reset
7	Reserved		RO R returns 0s	0
6	DCDC_SLEEP_LVL	When 1, DCDC output level in SLEEP mode is VDDx_SR_REG, to be other than 0 V. When 0, no effect	RW	0
5:4	TSLOT_LENGTH	Time slot duration programming (EEPROM bit): When 00: 0 µs When 01: 200 µs When 10: 500 µs When 11: 2 ms (Default value: See boot configuration)	RW	0x3
3	SLEEPSIG_POL	When 1, SLEEP signal active-high When 0, SLEEP signal active-low	RW	0
2	PWON_LP_OFF	When 1, allows device turnoff after a PWON Long Press (signal low) (EEPROM bits). (Default value: See boot configuration)	RW	1
1	PWON_LP_RST	When 1, allows digital core reset when the device is OFF (EEPROM bit). (Default value: See boot configuration)	RW	0
0	IT_POL	INT1 interrupt pad polarity control signal (EEPROM bit): When 0, active low When 1, active high (Default value: See boot configuration)	RW	0

Table 6-58. SLEEP_KEEP_LDO_ON_REG

Address Offset	0x41
Instance	Reset Domain: GENERAL RESET
Description	When corresponding control bit = 0 in EN1_ LDO_ASS register (default setting): Configuration Register keeping the full load capability of LDO regulator (ACTIVE mode) during the SLEEP state of the device. When control bit = 1, LDO regulator full load capability (ACTIVE mode) is maintained during device SLEEP state. When control bit = 0, the LDO regulator is set or stay in low-power mode during device SLEEP state(but then supply state can be overwritten programming ST[1:0]). Control bit value has no effect if the LDO regulator is off. When corresponding control bit = 1 in EN1_ LDO_ASS register: Configuration Register setting the LDO regulator state driven by SCLSR_EN1 signal low level (when SCLSR_EN1 is high the regulator is on, full power): - the regulator is set off if its corresponding Control bit = 0 in SLEEP_KEEP_LDO_ON register (default) - the regulator is set in low-power mode if its corresponding control bit = 1 in SLEEP_KEEP_LDO_ON register
Type	RW

7	6	5	4	3	2	1	0
LDO3_ KEEPON	LDO4_ KEEPON	LDO7_KEEPO N	LDO8_ KEEPON	LDO5_KEEPO N	LDO2_ KEEPON	LDO1_ KEEPON	LDO6_ KEEPON

Bits	Field Name	Description	Type	Reset
7	LDO3_KEEPON	Setting supply state during device SLEEP state or when SCLSR_EN1 is low	RW	0
6	LDO4_KEEPON	Setting supply state during device SLEEP state or when SCLSR_EN1 is low	RW	0
5	LDO7_KEEPON	Setting supply state during device SLEEP state or when SCLSR_EN1 is low	RW	0
4	LDO8_KEEPON	Setting supply state during device SLEEP state or when SCLSR_EN1 is low	RW	0
3	LDO5_KEEPON	Setting supply state during device SLEEP state or when SCLSR_EN1 is low	RW	0
2	LDO2_KEEPON	Setting supply state during device SLEEP state or when SCLSR_EN1 is low	RW	0
1	LDO1_KEEPON	Setting supply state during device SLEEP state or when SCLSR_EN1 is low	RW	0
0	LDO6_KEEPON	Setting supply state during device SLEEP state or when SCLSR_EN1 is low	RW	0

Copyright © 2010–2018, Texas Instruments Incorporated

Table 6-59. SLEEP_KEEP_RES_ON_REG

Address Offset	0x42
Instance	
Description	Configuration Register keeping, during the SLEEP state of the device (but then supply state can be overwritten programming ST[1:0]): - the full load capability of LDO regulator (ACTIVE mode), - The PWM mode of DCDC converter - 32-kHz clock output - Register access though I^2C interface (keeping the internal high speed clock on) - Die Thermal monitoring on Control bit value has no effect if the resource is off.
Type	RW

7	6	5	4	3	2	1	0
THERM_ KEEPON	CLKOUT32K_ KEEPON	VRTC_ KEEPON	I2CHS_ KEEPON	Reserved	VDD2_ KEEPON	VDD1_ KEEPON	VIO_ KEEPON

Bits	Field Name	Description	Type	Reset
7	THERM_KEEPON	When 1, thermal monitoring is maintained during device SLEEP state. When 0, thermal monitoring is turned off during device SLEEP state.	RW	0
6	CLKOUT32K_KEEPON	When 1, CLK32KOUT output is maintained during device SLEEP state. When 0, CLK32KOUT output is set low during device SLEEP state.	RW	0
5	VRTC_KEEPON	When 1, LDO regulator full load capability (ACTIVE mode) is maintained during device SLEEP state. When 0, the LDO regulator is set or stays in low-power mode during device SLEEP state.	RW	0
4	I2CHS_KEEPON	When 1, high speed internal clock is maintained during device SLEEP state. When 0, high speed internal clock is turned off during device SLEEP state.	RW	0
3	Reserved		RO	0
2	VDD2_KEEPON	When 1, VDD2 SMPS PWM mode is maintained during device SLEEP state. No effect if VDD2 working mode is PFM. When 0, VDD2 SMPS PFM mode is set during device SLEEP state.	RW	0
1	VDD1_KEEPON	When 1, VDD1 SMPS PWM mode is maintained during device SLEEP state. No effect if VDD1 working mode is PFM. When 0, VDD1 SMPS PFM mode is set during device SLEEP state.	RW	0
0	VIO_KEEPON	When 1, VIO SMPS PWM mode is maintained during device SLEEP state. No effect if VIO working mode is PFM. When 0, VIO SMPS PFM mode is set during device SLEEP state.	RW	0

Copyright © 2010–2018, Texas Instruments Incorporated

Table 6-60. SLEEP_SET_LDO_OFF_REG

Address Offset	0x43
Instance	Reset Domain: GENERAL RESET
Description	Configuration Register turning-off LDO regulator during the SLEEP state of the device. Corresponding *_KEEP_ON control bit in SLEEP_KEEP_RES_ON register should be 0 to make this *_SET_OFF control bit effective
Type	RW

7	6	5	4	3	2	1	0
LDO3_SETOFF	LDO4_SETOFF	LDO7_SETOFF	LDO8_SETOFF	LDO5_SETOFF	LDO2_SETOFF	LDO1_SETOFF	LDO6_SETOFF

Bits	Field Name	Description	Type	Reset
7	LDO3_SETOFF	When 1, LDO regulator is turned off during device SLEEP state. When 0, No effect	RW	0
6	LDO4_SETOFF	When 1, LDO regulator is turned off during device SLEEP state. When 0, No effect	RW	0
5	LDO7_SETOFF	When 1, LDO regulator is turned off during device SLEEP state. When 0, No effect	RW	0
4	LDO8_SETOFF	When 1, LDO regulator is turned off during device SLEEP state. When 0, No effect	RW	0
3	LDO5_SETOFF	When 1, LDO regulator is turned off during device SLEEP state. When 0, No effect	RW	0
2	LDO2_SETOFF	When 1, LDO regulator is turned off during device SLEEP state. When 0, No effect	RW	0
1	LDO1_SETOFF	When 1, LDO regulator is turned off during device SLEEP state. When 0, No effect	RW	0
0	LDO6_SETOFF	When 1, LDO regulator is turned off during device SLEEP state. When 0, No effect	RW	0

Copyright © 2010–2018, Texas Instruments Incorporated

Table 6-61. SLEEP_SET_RES_OFF_REG

Address Offset	0x44
Instance	Reset Domain: GENERAL RESET
Description	Configuration Register turning-off SMPS regulator during the SLEEP state of the device. Corresponding *_KEEP_ON control bit in SLEEP_KEEP_RES_ON2 register should be 0 to make this *_SET_OFF control bit effective. Supplies voltage expected after their wake-up (SLEEP-to-ACTIVE state transition) can also be programmed.
Type	RW

7	6	5	4	3	2	1	0
DEFAULT_ VOLT	Reserved		SPARE_ SETOFF	VDDCTRL_ SETOFF	VDD2_ SETOFF	VDD1_ SETOFF	VIO_ SETOFF

Bits	Field Name	Description	Type	Reset
7	DEFAULT_VOLT	When 1, default voltages (register value after switch-on) will be applied to all resources during SLEEP-to-ACTIVE transition. When 0, voltages programmed before the ACTIVE-to-SLEEP state transition will be used to turned-on supplies during SLEEP-to-ACTIVE state transition.	RW	0
6:5	Reserved		RO R returns 0s	0x0
4	SPARE_SETOFF	Spare bit	RW	0
3	VDDCTRL_SETOFF	When 1, SMPS is turned off during device SLEEP state. When 0, No effect.	RW	0
2	VDD2_SETOFF	When 1, SMPS is turned off during device SLEEP state. When 0, No effect.	RW	0
1	VDD1_SETOFF	When 1, SMPS is turned off during device SLEEP state. When 0, No effect.	RW	0
0	VIO_SETOFF	When 1, SMPS is turned off during device SLEEP state. When 0, No effect.	RW	0

Table 6-62. EN1_LDO_ASS_REG

Address Offset	0x45
Instance	Reset Domain: TURNOFF RESET
Description	Configuration Register setting the LDO regulators, driven by the multiplexed SCLSR_EN1 signal. When control bit = 1, LDO regulator state is driven by the SCLSR_EN1 control signal and is also defined though SLEEP_KEEP_LDO_ON register setting: When SCLSR_EN1 is high the regulator is on, When SCLSR_EN1 is low: - the regulator is off if its corresponding Control bit = 0 in SLEEP_KEEP_LDO_ON register - the regulator is working in low-power mode if its corresponding control bit = 1 in SLEEP_KEEP_LDO_ON register When control bit = 0 no effect: LDO regulator state is driven though registers programming and the device state Any control bit of this register set to 1 will disable the I^2C SR Interface functionality
Type	RW

7	6	5	4	3	2	1	0
LDO3_EN1	LDO4_EN1	LDO7_EN1	LDO8_EN1	LDO5_EN1	LDO2_EN1	LDO1_EN1	LDO6_EN1

Bits	Field Name	Description	Type	Reset
7	LDO3_EN1	Setting supply state control though SCLSR_EN1 signal	RW	0
6	LDO4_EN1	Setting supply state control though SCLSR_EN1 signal	RW	0
5	LDO7_EN1	Setting supply state control though SCLSR_EN1 signal	RW	0
4	LDO8_EN1	Setting supply state control though SCLSR_EN1 signal	RW	0
3	LDO5_EN1	Setting supply state control though SCLSR_EN1 signal	RW	0
2	LDO2_EN1	Setting supply state control though SCLSR_EN1 signal	RW	0
1	LDO1_EN1	Setting supply state control though SCLSR_EN1 signal	RW	0
0	LDO6_EN1	Setting supply state control though SCLSR_EN1 signal	RW	0

Copyright © 2010–2018, Texas Instruments Incorporated

Table 6-63. EN1_SMPS_ASS_REG

Address Offset	0x46
Instance	Reset Domain: TURNOFF RESET
Description	Configuration Register setting the SMPS Supplies driven by the multiplexed SCLSR_EN1 signal. When control bit = 1, SMPS Supply state and voltage is driven by the SCLSR_EN1 control signal and is also defined though SLEEP_KEEP_RES_ON register setting. When control bit = 0 no effect: SMPS Supply state is driven though registers programming and the device state. Any control bit of this register set to 1 will disable the I^2C SR Interface functionality
Type	RW

7	6	5	4	3	2	1	0
Reserved			SPARE_EN1	VDDCTRL_EN1	VDD2_EN1	VDD1_EN1	VIO_EN1

Bits	Field Name	Description	Type	Reset
7:5	Reserved		RO R returns 0s	0x0
4	SPARE_EN1	Spare bit	RW	0
3	VDDCTRL_EN1	When control bit = 1: When EN1 is high the supply voltage is programmed though VDDCtrl_OP_REG register, and it can also be programmed off. When EN1 is low the supply voltage is programmed though VDDCtrl_SR_REG register, and it can also be programmed off. When control bit = 0: No effect: Supply state is driven though registers programming and the device state	RW	0
2	VDD2_EN1	When control bit = 1: When SCLSR_EN1 is high the supply voltage is programmed though VDD2_OP_REG register, and it can also be programmed off. When SCLSR_EN1 is low the supply voltage is programmed though VDD2_SR_REG register, and it can also be programmed off. When SCLSR_EN1 is low and SLEEP_KEEP_RES_ON = 1 the SMPS is working in low-power mode, if not tuned off through VDD2_SR_REG register. When control bit = 0 No effect: Supply state is driven though registers programming and the device state	RW	0
1	VDD1_EN1	When 1: When SCLSR_EN1 is high the supply voltage is programmed though VDD1_OP_REG register, and it can also be programmed off. When SCLSR_EN1 is low the supply voltage is programmed though VDD1_SR_REG register, and it can also be programmed off. When SCLSR_EN1 is low and SLEEP_KEEP_RES_ON = 1 the SMPS is working in low-power mode, if not tuned off though VDD1_SR_REG register. When control bit = 0 no effect: supply state is driven though registers programming and the device state	RW	0
0	VIO_EN1	When control bit = 1, supply state is driven by the SCLSR_EN1 control signal and is also defined though SLEEP_KEEP_RES_ON register setting: When SCLSR_EN1 is high the supply is on, When SCLSR_EN1 is low: - the supply is off (default) or the SMPS is working in low-power mode if its corresponding control bit = 1 in SLEEP_KEEP_RES_ON register When control bit = 0 No effect: SMPS state is driven though registers programming and the device state	RW	0

Table 6-64. EN2_LDO_ASS_REG

Address Offset	0x47
Instance	Reset Domain: TURNOFF RESET
Description	Configuration Register setting the LDO regulators, driven by the multiplexed SDASR_EN2 signal. When control bit = 1, LDO regulator state is driven by the SDASR_EN2 control signal and is also defined though SLEEP_KEEP_LDO_ON register setting: When SDASR_EN2 is high the regulator is on, When SCLSR_EN2 is low: - the regulator is off if its corresponding Control bit = 0 in SLEEP_KEEP_LDO_ON register - the regulator is working in low-power mode if its corresponding control bit = 1 in SLEEP_KEEP_LDO_ON register When control bit = 0 no effect: LDO regulator state is driven though registers programming and the device state Any control bit of this register set to 1 will disable the I^2C SR Interface functionality
Type	RW

7	6	5	4	3	2	1	0
LDO3_EN2	LDO4_EN2	LDO7_EN2	LDO8_EN2	LDO5_EN2	LDO2_EN2	LDO1_EN2	LDO6_EN2

Bits	Field Name	Description	Type	Reset
7	LDO3_EN2	Setting supply state control though SDASR_EN2 signal	RW	0
6	LDO4_EN2	Setting supply state control though SDASR_EN2 signal	RW	0
5	LDO7_EN2	Setting supply state control though SDASR_EN2 signal	RW	0
4	LDO8_EN2	Setting supply state control though SDASR_EN2 signal	RW	0
3	LDO5_EN2	Setting supply state control though SDASR_EN2 signal	RW	0
2	LDO2_EN2	Setting supply state control though SDASR_EN2 signal	RW	0
1	LDO1_EN2	Setting supply state control though SDASR_EN2 signal	RW	0
0	LDO6_EN2	Setting supply state control though SDASR_EN2 signal	RW	0

Copyright © 2010–2018, Texas Instruments Incorporated

Table 6-65. EN2_SMPS_ASS_REG

Address Offset	0x48
Instance	Reset Domain: TURNOFF RESET
Description	Configuration Register setting the SMPS Supplies driven by the multiplexed SDASR_EN2 signal. When control bit = 1, SMPS Supply state and voltage is driven by the SDASR_EN2 control signal and is also defined though SLEEP_KEEP_RES_ON register setting. When control bit = 0 no effect: SMPS Supply state is driven though registers programming and the device state Any control bit of this register set to 1 will disable the I^2C SR Interface functionality
Type	RW

7	6	5	4	3	2	1	0
Reserved			SPARE_EN2	VDDCTRL_EN2	VDD2_EN2	VDD1_EN2	VIO_EN2

Bits	Field Name	Description	Type	Reset
7:5	Reserved		RO R returns 0s	0x0
4	SPARE_EN2	Spare bit	RW	0
3	VDDCTRL_EN2	When control bit = 1: When EN2 is high the supply voltage is programmed though VDDCtrl_OP_REG register, and it can also be programmed off.. When EN2 is low the supply voltage is programmed though VDDCtrl_SR_REG register, and it can also be programmed off. When EN2 is low and VDDCtrl_KEEPON = 1 the SMPS is working in low-power mode, if not tuned off though VDDCtrl_SR_REG register. When control bit = 0 no effect: Supply state is driven though registers programming and the device state	RW	0
2	VDD2_EN2	When control bit = 1: When SDASR_EN2 is high the supply voltage is programmed though VDD2_OP_REG register, and it can also be programmed off. When SDASR_EN2 is low the supply voltage is programmed though VDD2_SR_REG register, and it can also be programmed off. When SDASR_EN2 is low and SLEEP_KEEP_RES_ON = 1 the SMPS is working in low-power mode, if not tuned off though VDD2_SR_REG register. When control bit = 0 no effect: Supply state is driven though registers programming and the device state	RW	0
1	VDD1_EN2	When control bit = 1: When SDASR_EN2 is high the supply voltage is programmed though VDD1_OP_REG register, and it can also be programmed off. When SDASR_EN2 is low the supply voltage is programmed though VDD1_SR_REG register, and it can also be programmed off. When SDASR_EN2 is low and SLEEP_KEEP_RES_ON = 1 the SMPS is working in low-power mode, if not tuned off though VDD1_SR_REG register. When control bit = 0 no effect: supply state is driven though registers programming and the device state	RW	0
0	VIO_EN2	When control bit = 1, supply state is driven by the SCLSR_EN2 control signal and is also defined though SLEEP_KEEP_RES_ON register setting: When SDASR _EN2 is high the supply is on, When SDASR _EN2 is low : - the supply is off (default) or the SMPS is working in low-power mode if its corresponding control bit = 1 in SLEEP_KEEP_RES_ON register When control bit = 0 no effect: SMPS state is driven though registers programming and the device state	RW	0

Table 6-66. INT_STS_REG

Address Offset	0x50
Instance	Reset Domain: FULL RESET
Description	Interrupt status register: The interrupt status bit is set to 1 when the associated interrupt event is detected. Interrupt status bit is cleared by writing 1.
Type	RW

7	6	5	4	3	2	1	0
RTC_PERIOD_IT	RTC_ALARM_IT	HOTDIE_IT	PWRHOLD_R_IT	PWRON_LP_IT	PWRON_IT	VMBHI_IT	PWRHOLD_F_IT

Bits	Field Name	Description	Type	Reset
7	RTC_PERIOD_IT	RTC period event interrupt status.	RW W1 to Clr	0
6	RTC_ALARM_IT	RTC alarm event interrupt status.	RW W1 to Clr	0
5	HOTDIE_IT	Hot-die event interrupt status.	RW W1 to Clr	0
4	PWRHOLD_R_IT	Rising PWRHOLD event interrupt status.	RW W1 to Clr	0
3	PWRON_LP_IT	PWRON Long Press event interrupt status.	RW W1 to Clr	0
2	PWRON_IT	PWRON event interrupt status.	RW W1 to Clr	0
1	VMBHI_IT	VBAT > VMHI event interrupt status	RW W1 to Clr	0
0	PWRHOLD_F_IT	Falling PWRHOLD event interrupt status.	RW W1 to Clr	0

Copyright © 2010–2018, Texas Instruments Incorporated

Table 6-67. INT_MSK_REG

Address Offset	0x51
Instance	Reset Domain: GENERAL RESET
Description	Interrupt mask register: When *_IT_MSK is set to 1, the associated interrupt is masked: INT1 signal is not activated, but *_IT interrupt status bit is updated. When *_IT_MSK is set to 0, the associated interrupt is enabled: INT1 signal is activated, *_IT is updated.
Type	RW

7	6	5	4	3	2	1	0
RTC_PERIOD_IT_MSK	RTC_ALARM_IT_MSK	HOTDIE_IT_MSK	PWRHOLD_R_IT_MSK	PWRON_LP_IT_MSK	PWRON_IT_MSK	VMBHI_IT_MSK	PWRHOLD_F_IT_MSK

Bits	Field Name	Description	Type	Reset
7	RTC_PERIOD_IT_MSK	RTC period event interrupt mask.	RW	1
6	RTC_ALARM_IT_MSK	RTC alarm event interrupt mask.	RW	1
5	HOTDIE_IT_MSK	Hot die event interrupt mask.	RW	1
4	PWRHOLD_R_IT_MSK	PWRHOLD rising-edge event interrupt mask.	RW	1
3	PWRON_LP_IT_MSK	PWRON Long Press event interrupt mask.	RW	1
2	PWRON_IT_MSK	PWRON event interrupt mask.	RW	1
1	VMBHI_IT_MSK	VBAT > VMBHI interrupt event mask bit When 0, interrupt not masked. Device automatically switches on at NO SUPPLY-to-OFF BACKUP-to-OFF transition When 1, interrupt is masked. Device does not switch on until a start reason is received. (EEPROM bit. Default value: See boot configuration)	RW	1
0	PWRHOLD_F_IT_MSK	PWRHOLD falling-edge event interrupt mask.	RW	1

Table 6-68. INT_STS2_REG

Address Offset	0x52
Instance	Reset Domain: FULL RESET
Description	Interrupt status register: The interrupt status bit is set to 1 when the associated interrupt event is detected. Interrupt status bit is cleared by writing 1.
Type	RW

7	6	5	4	3	2	1	0
GPIO3_F_IT	GPIO3_R_IT	GPIO2_F_IT	GPIO2_R_IT	GPIO1_F_IT	GPIO1_R_IT	GPIO0_F_IT	GPIO0_R_IT

Bits	Field Name	Description	Type	Reset
7	GPIO3_F_IT	GPIO3 falling-edge detection interrupt status	RW W1 to Clr	0
6	GPIO3_R_IT	GPIO3 rising-edge detection interrupt status	RW W1 to Clr	0
5	GPIO2_F_IT	GPIO2 falling-edge detection interrupt status	RW W1 to Clr	0
4	GPIO2_R_IT	GPIO2 rising-edge detection interrupt status	RW W1 to Clr	0
3	GPIO1_F_IT	GPIO1 falling-edge detection interrupt status	RW W1 to Clr	0
2	GPIO1_R_IT	GPIO1 rising-edge detection interrupt status	RW W1 to Clr	0
1	GPIO0_F_IT	GPIO0 falling-edge detection interrupt status	RW W1 to Clr	0
0	GPIO0_R_IT	GPIO0 rising-edge detection interrupt status	RW W1 to Clr	0

Table 6-69. INT_MSK2_REG

Address Offset	0x53
Instance	Reset Domain: GENERAL RESET
Description	Interrupt mask register: When *_IT_MSK is set to 1, the associated interrupt is masked: INT1 signal is not activated, but *_IT interrupt status bit is updated. When *_IT_MSK is set to 0, the associated interrupt is enabled: INT1 signal is activated, *_IT is updated.
Type	RW

7	6	5	4	3	2	1	0
GPIO3_F_IT_MSK	GPIO3_R_IT_MSK	GPIO2_F_IT_MSK	GPIO2_R_IT_MSK	GPIO1_F_IT_MSK	GPIO1_R_IT_MSK	GPIO0_F_IT_MSK	GPIO0_R_IT_MSK

Bits	Field Name	Description	Type	Reset
7	GPIO3_F_IT_MSK	GPIO3 falling-edge detection interrupt mask.	RW	1
6	GPIO3_R_IT_MSK	GPIO3 rising-edge detection interrupt mask.	RW	1
5	GPIO2_F_IT_MSK	GPIO2 falling-edge detection interrupt mask.	RW	1
4	GPIO2_R_IT_MSK	GPIO2 rising-edge detection interrupt mask.	RW	1
3	GPIO1_F_IT_MSK	GPIO1 falling-edge detection interrupt mask.	RW	1
2	GPIO1_R_IT_MSK	GPIO1 rising-edge detection interrupt mask.	RW	1
1	GPIO0_F_IT_MSK	GPIO0 falling-edge detection interrupt mask.	RW	1
0	GPIO0_R_IT _MSK	GPIO0 rising-edge detection interrupt mask.	RW	1

Copyright © 2010–2018, Texas Instruments Incorporated

Table 6-70. INT_STS3_REG

Address Offset	0x54
Instance	Reset Domain: FULL RESET
Description	Interrupt status register: The interrupt status bit is set to 1 when the associated interrupt event is detected. Interrupt status bit is cleared by writing 1.
Type	RW

7	6	5	4	3	2	1	0
PWRDN_IT	VMBCH2_L_IT	VMBCH2_H_IT	WTCHDG_IT	GPIO5_F_IT	GPIO5_R_IT	GPIO4_F_IT	GPIO4_R_IT

Bits	Field Name	Description	Type	Reset
7	PWRDN_IT	PWRDN reset input high detected	RW W1 to Clr	0
6	VMBCH2_L_IT	Comparator2 input below threshold detection interrupt status	RW W1 to Clr	0
5	VMBCH2_H_IT	Comparator2 input above threshold detection interrupt status	RW W1 to Clr	0
4	WTCHDG_IT	Watchdog interrupt status	RW W1 to Clr	0
3	GPIO5_F_IT	GPIO5 falling-edge detection interrupt status	RW W1 to Clr	0
2	GPIO5_R_IT	GPIO5 rising-edge detection interrupt status	RW W1 to Clr	0
1	GPIO4_F_IT	GPIO4 falling-edge detection interrupt status	RW W1 to Clr	0
0	GPIO4_R_IT	GPIO4 rising-edge detection interrupt status	RW W1 to Clr	0

Table 6-71. INT_MSK3_REG

Address Offset	0x55
Instance	Reset Domain: GENERAL RESET
Description	Interrupt mask register: When *_IT_MSK is set to 1, the associated interrupt is masked: INT1 signal is not activated, but *_IT interrupt status bit is updated. When *_IT_MSK is set to 0, the associated interrupt is enabled: INT1 signal is activated, *_IT is updated.
Type	RW

7	6	5	4	3	2	1	0
PWRDN_ IT_MSK	VMBCH2_L_ IT_MSK	VMBCH2_H_ IT_MSK	WTCHDG_ IT_MSK	GPIO5_F_ IT_MSK	GPIO5_R_ IT_MSK	GPIO4_F_ IT_MSK	GPIO4_R_ IT_MSK

Bits	Field Name	Description	Type	Reset
7	PWRDN_IT_MSK	PWRDN interrupt mask	RW	1
6	VMBCH2_L_IT_MSK	Comparator2 input below threshold detection interrupt mask	RW	1
5	VMBCH2_H_IT_MSK	Comparator2 input above threshold detection interrupt mask	RW	1
4	WTCHDG_IT_MSK	Watchdog interrupt mask.	RW	1
3	GPIO5_F_IT_MSK	GPIO5 falling-edge detection interrupt mask.	RW	1
2	GPIO5_R_IT_MSK	GPIO5 rising-edge detection interrupt mask.	RW	1
1	GPIO4_F_IT_MSK	GPIO4 falling-edge detection interrupt mask.	RW	1
0	GPIO4_R_IT_MSK	GPIO4 rising-edge detection interrupt mask.	RW	1

Copyright © 2010–2018, Texas Instruments Incorporated

Table 6-72. GPIO0_REG

Address Offset	0x60
Instance	Reset Domain: GENERAL RESET
Description	GPIO0 configuration register
Type	RW

7	6	5	4	3	2	1	0
GPIO_SLEEP	Reserved	GPIO_ODEN	GPIO_DEB	GPIO_PDEN	GPIO_CFG	GPIO_STS	GPIO_SET

Bits	Field Name	Description	Type	Reset
7	GPIO_SLEEP(1)	1: as GPO, force low 0: No impact, keep as in active mode	RW	0
6	Reserved	Reserved bit	RO R returns 0s	0
5	GPIO_ODEN	Selection of output mode, EEPROM bit 0: Push-pull output 1: Open-drain output (Default value: See boot configuration) GPIO assigned to power-up sequence, this bit will be set to 1 by a TURNOFF reset	RW	0
4	GPIO_DEB	GPIO input debouncing time configuration: When 0, the debouncing is 91.5 µs using a 30.5 µs clock rate When 1, the debouncing is 150 ms using a 50 ms clock rate	RW	0
3	GPIO_PDEN	GPIO pad pulldown control: 1: Pulldown is enabled 0: Pulldown is disabled	RW	0
2	GPIO_CFG	Configuration of the GPIO pad direction: When 0, the pad is configured as an input When 1, the pad is configured as an output (Default value: See boot configuration)	RW	0
1	GPIO_STS	Status of the GPIO pad	RO	1
0	GPIO_SET	Value set on the GPIO output when configured in output mode GPIO assigned to power-up sequence, this bit will be in TURNOFF reset	RW	0

(1) The GPIO_SLEEP bit is a bit available only for GPIO_0/2/6/7.This bit will be take into account and be effective only if the GPIO_0/2/6/7 is associated to a TIME_SLOT. It means that this bit is useful only if the GPIO is part of the POWER UP SEQUENCE. Note that in this case the associated GPIO will be set as GPO. GPIO_SLEEP bit is a bit related to the PMU sleep mode only, No action in ACTIVE mode. It is used to define SLEEP mode state for GPIO 0/2/6/7.

Copyright © 2010–2018, Texas Instruments Incorporated

Table 6-73. GPIO1_REG

Address Offset	0x61
Instance	Reset Domain: GENERAL RESET
Description	GPIO1 configuration register
Type	RW

7	6	5	4	3	2	1	0
Reserved		GPIO_SEL	GPIO_DEB	GPIO_PDEN	GPIO_CFG	GPIO_STS	GPIO_SET

Bits	Field Name	Description	Type	Reset
7:6	Reserved		RO R returns 0s	0x0
5	GPIO_SEL	Select signal to be available at GPIO when configured as output: 0: GPIO_SET 1: LED1 out	RW	0
4	GPIO_DEB	GPIO input debouncing time configuration: When 0, the debouncing is 91.5 µs using a 30.5 µs clock rate When 1, the debouncing is 150 ms using a 50 ms clock rate	RW	0
3	GPIO_PDEN	GPIO pad pulldown control: 1: Pulldown is enabled 0: Pulldown is disabled	RW	1
2	GPIO_CFG	Configuration of the GPIO pad direction: When 0, the pad is configured as an input When 1, the pad is configured as an output	RW	0
1	GPIO_STS	Status of the GPIO pad	RO	1
0	GPIO_SET	Value set on the GPIO output when configured in output mode	RW	0

Copyright © 2010–2018, Texas Instruments Incorporated

Table 6-74. GPIO2_REG

Address Offset	0x62
Instance	Reset Domain: GENERAL RESET
Description	GPIO2 configuration register
Type	RW

7	6	5	4	3	2	1	0
GPIO_SLEEP	Reserved		GPIO_DEB	GPIO_PDEN	GPIO_CFG	GPIO_STS	GPIO_SET

Bits	Field Name	Description	Type	Reset
7	GPIO_SLEEP	1: as GPO, force low 0: no impact, keep as in active mode	RW	0
6:5	Reserved		RO R returns 0s	0x0
4	GPIO_DEB	GPIO input debouncing time configuration: When 0, the debouncing is 91.5 µs using a 30.5 µs clock rate When 1, the debouncing is 150 ms using a 50 ms clock rate	RW	0
3	GPIO_PDEN	GPIO pad pulldown control: 1: Pulldown is enabled 0: Pulldown is disabled GPIO assigned to power-up sequence, this bit will be set to 0 by a TURNOFF reset	RW	1
2	GPIO_CFG	Configuration of the GPIO pad direction: When 0, the pad is configured as an input When 1, the pad is configured as an output (Default value: See boot configuration) GPIO assigned to power-up sequence, this bit will be set to 1 by a TURNOFF reset	RW	0
1	GPIO_STS	Status of the GPIO pad	RO	1
0	GPIO_SET	Value set on the GPIO output when configured in output mode GPIO assigned to power-up sequence, this bit will be in TURNOFF reset	RW	0

Copyright © 2010–2018, Texas Instruments Incorporated

Table 6-75. GPIO3_REG

Address Offset	0x63
Instance	Reset Domain: GENERAL RESET
Description	GPIO3 configuration register
Type	RW

7	6	5	4	3	2	1	0
Reserved	GPIO_SEL		GPIO_DEB	GPIO_PDEN	GPIO_CFG	GPIO_STS	GPIO_SET

Bits	Field Name	Description	Type	Reset
7	Reserved		RO R returns 0s	0
6:5	GPIO_SEL	Select signal to be available at GPIO when configured as output: 00: GPIO_SET 01: LED2 out 10: PWM out	RW	0x0
4	GPIO_DEB	GPIO input debouncing time configuration: When 0, the debouncing is 91.5 µs using a 30.5 µs clock rate When 1, the debouncing is 150 ms using a 50 ms clock rate	RW	0
3	GPIO_PDEN	GPIO pad pulldown control: 1: Pulldown is enabled 0: Pulldown is disabled	RW	1
2	GPIO_CFG	Configuration of the GPIO pad direction: When 0, the pad is configured as an input When 1, the pad is configured as an output	RW	0
1	GPIO_STS	Status of the GPIO pad	RO	1
0	GPIO_SET	Value set on the GPIO output when configured in output mode	RW	0

Table 6-76. GPIO4_REG

Address Offset	0x64
Instance	Reset Domain: GENERAL RESET
Description	GPIO4 configuration register
Type	RW

7	6	5	4	3	2	1	0
Reserved			GPIO_DEB	GPIO_PDEN	GPIO_CFG	GPIO_STS	GPIO_SET

Bits	Field Name	Description	Type	Reset
7:5	Reserved		RO R returns 0s	0x0
4	GPIO_DEB	GPIO input debouncing time configuration: When 0, the debouncing is 91.5 µs using a 30.5 µs clock rate When 1, the debouncing is 150 ms using a 50 ms clock rate	RW	0
3	GPIO_PDEN	GPIO pad pulldown control: 1: Pulldown is enabled 0: Pulldown is disabled	RW	1
2	GPIO_CFG	Configuration of the GPIO pad direction: When 0, the pad is configured as an input When 1, the pad is configured as an output	RW	0
1	GPIO_STS	Status of the GPIO pad	RO	1
0	GPIO_SET	Value set on the GPIO output when configured in output mode	RW	0

Copyright © 2010–2018, Texas Instruments Incorporated

Table 6-77. GPIO5_REG

Address Offset	0x65
Instance	Reset Domain: GENERAL RESET
Description	GPIO5 configuration register
Type	RW

7	6	5	4	3	2	1	0
Reserved			GPIO_DEB	GPIO_PDEN	GPIO_CFG	GPIO_STS	GPIO_SET

Bits	Field Name	Description	Type	Reset
7:5	Reserved		RO R returns 0s	0x0
4	GPIO_DEB	GPIO input debouncing time configuration: When 0, the debouncing is 91.5 µs using a 30.5 µs clock rate When 1, the debouncing is 150 ms using a 50 ms clock rate	RW	0
3	GPIO_PDEN	GPIO pad pulldown control: 1: Pulldown is enabled 0: Pulldown is disabled	RW	1
2	GPIO_CFG	Configuration of the GPIO pad direction: When 0, the pad is configured as an input When 1, the pad is configured as an output	RW	0
1	GPIO_STS	Status of the GPIO pad	RO	1
0	GPIO_SET	Value set on the GPIO output when configured in output mode	RW	0

Copyright © 2010–2018, Texas Instruments Incorporated

Table 6-78. GPIO6_REG

Address Offset	0x66
Instance	Reset Domain: GENERAL RESET
Description	GPIO6 configuration register
Type	RW

7	6	5	4	3	2	1	0
GPIO_SLEEP	Reserved		GPIO_DEB	GPIO_PDEN	GPIO_CFG	GPIO_STS	GPIO_SET

Bits	Field Name	Description	Type	Reset
7	GPIO_SLEEP	1: as GPO, force low 0: no impact, keep as in active mode	RW	0
6:5	Reserved		RO R returns 0s	0x0
4	GPIO_DEB	GPIO input debouncing time configuration: When 0, the debouncing is 91.5 µs using a 30.5 µs clock rate When 1, the debouncing is 150 ms using a 50 ms clock rate	RW	0
3	GPIO_PDEN	GPIO pad pulldown control: 1: Pulldown is enabled 0: Pulldown is disabled GPIO assigned to power-up sequence, this bit will be set to 0 by a TURNOFF reset	RW	1
2	GPIO_CFG	Configuration of the GPIO pad direction: When 0, the pad is configured as an input When 1, the pad is configured as an output (Default value: See boot configuration) GPIO assigned to power-up sequence, this bit will be set to 1 by a TURNOFF reset	RW	0
1	GPIO_STS	Status of the GPIO pad	RO	1
0	GPIO_SET	Value set on the GPIO output when configured in output mode GPIO assigned to power-up sequence, this bit will be in TURNOFF reset	RW	0

Table 6-79. GPIO7_REG

Address Offset	0x67
Instance	Reset Domain: GENERAL RESET
Description	GPIO7 configuration register
Type	RW

7	6	5	4	3	2	1	0
GPIO_SLEEP	Reserved		GPIO_DEB	GPIO_PDEN	GPIO_CFG	GPIO_STS	GPIO_SET

Bits	Field Name	Description	Type	Reset
7	GPIO_SLEEP	1: as GPO, force low 0: no impact, keep as in active mode	RW	0
6:5	Reserved		RO R returns 0s	0x0
4	GPIO_DEB	GPIO input debouncing time configuration: When 0, the debouncing is 91.5 µs using a 30.5 µs clock rate When 1, the debouncing is 150 ms using a 50 ms clock rate	RW	0
3	GPIO_PDEN	GPIO pad pulldown control: 1: Pulldown is enabled 0: Pulldown is disabled GPIO assigned to power-up sequence, this bit will be set to 0 by a TURNOFF reset	RW	1
2	GPIO_CFG	Configuration of the GPIO pad direction: When 0, the pad is configured as an input When 1, the pad is configured as an output (Default value: See boot configuration) GPIO assigned to power-up sequence, this bit will be set to 1 by a TURNOFF reset	RW	0
1	GPIO_STS	Status of the GPIO pad	RO	1
0	GPIO_SET	Value set on the GPIO output when configured in output mode GPIO assigned to power-up sequence, this bit will be in TURNOFF reset	RW	0

Copyright © 2010–2018, Texas Instruments Incorporated

Table 6-80. GPIO8_REG

Address Offset	0x68
Instance	Reset Domain: GENERAL RESET
Description	GPIO8 configuration register
Type	RW

7	6	5	4	3	2	1	0
Reserved		GPIO_SEL	GPIO_DEB	GPIO_PDEN	GPIO_CFG	GPIO_STS	GPIO_SET

Bits	Field Name	Description	Type	Reset
7:6	Reserved		RO R returns 0s	0x0
5	GPIO_SEL	Select signal to be available at GPIO when configured as output: 0: GPIO_SET 1: PWM out	RW	0
4	GPIO_DEB	GPIO input debouncing time configuration: When 0, the debouncing is 91.5 µs using a 30.5 µs clock rate When 1, the debouncing is 150 ms using a 50 ms clock rate	RW	0
3	GPIO_PDEN	GPIO pad pulldown control: 1: Pulldown is enabled 0: Pulldown is disabled	RW	1
2	GPIO_CFG	Configuration of the GPIO pad direction: When 0, the pad is configured as an input When 1, the pad is configured as an output	RW	0
1	GPIO_STS	Status of the GPIO pad	RO	1
0	GPIO_SET	Value set on the GPIO output when configured in output mode	RW	0

Table 6-81. WATCHDOG_REG

Address Offset	0x69
Instance	Reset Domain: GENERAL RESET
Description	Watchdog
Type	RW

7	6	5	4	3	2	1	0
Reserved				WTCHDG_ MODE	WTCHDG_TIME		

Bits	Field Name	Description	Type	Reset
7:4	Reserved		RO R returns 0s	0x0
3	WTCHDG_MODE	0: Periodic operation: A periodical interrupt is generated based on WTCHDG_TIME setting. IC will generate WTCHDOG shutdown if interrupt is not cleared during the period. 1: Interrupt mode: IC will generate WTCHDOG shutdown if an interrupt is pending (no cleared) more than WTCHDG_TIME s.	RW	0
2:0	WTCHDG_TIME	000: Watchdog disabled 001: 5 seconds 010: 10 seconds 011: 20 Seconds 100: 40 seconds 101: 60 seconds 110: 80 seconds 111: 100 seconds (EEPROM bit) (Default value: See boot configuration)	RW	0x0

Table 6-82. VMBCH_REG

Address Offset	0x6A
Instance	Reset Domain: GENERAL RESET
Description	Comparator control register
Type	RW

7	6	5	4	3	2	1	0
Reserved		VMBCH_SEL					Reserved

Bits	Field Name	Description	Type	Reset
7:6	Reserved		RO R returns 0s	0x0
5:1	VMBCH_SEL	Battery voltage comparator threshold (EEPROM) 11000 to 11111: 3.5 V 10111: 3.45 V ... 01110: 3 V (default) ... 00101: 2.55 V 00001 to 00100: 2.5 V 00000: Bypass (Default value: See boot configuration)	RW	0x00
0	Reserved		RO R returns 0s	0

Copyright © 2010–2018, Texas Instruments Incorporated

Table 6-83. VMBCH2_REG

Address Offset	0x6B
Instance	Reset Domain: GENERAL RESET
Description	Comparator for detecting battery discharge below threshold level
Type	RW

7	6	5	4	3	2	1	0
Reserved		VMBDCH2_SEL					VMBDCH2_ DEB

Bits	Field Name	Description	Type	Reset
7:6	Reserved		RO R returns 0s	0x0
5:1	VMBDCH2_SEL	Battery voltage comparator threshold 11000 to 11111: 3.5 V 10111: 3.45 V ... 00101: 2.55 V 00001 to 00100: 2.5 V 00000: Bypass	RW	0x00
0	VMBDCH2_DEB	Comp2 input debouncing time configuration: When 0, the debouncing is 91.5 µs using a 30.5 µs clock rate When 1, the debouncing is 150 ms using a 50 ms clock rate	RW	0

Table 6-84. LED_CTRL1_REG

Address Offset	0x6C
Instance	Reset Domain: GENERAL RESET
Description	LED ON/OFF control register.
Type	RW

7	6	5	4	3	2	1	0
Reserved		LED2_PERIOD			LED1_PERIOD		

Bits	Field Name	Description	Type	Reset
7:6	Reserved		RO R returns 0s	0x0
5:3	LED2_PERIOD	Period of LED2 signal: 000: LED2 OFF 001: 0.125 s 010: 0.25 s ... 110: 4 s 111: 8 s	RW	0x0
2:0	LED1_PERIOD	Period of LED1 signal: 000: LED1 OFF 001: 0.125 s 010: 0.25 s ... 10: 2 s 110: 4 s 111: 8 s	RW	0x0

Table 6-85. LED_CTRL2_REG1

Address Offset	0x6D
Instance	Reset Domain: GENERAL RESET
Description	LED ON/OFF control register.
Type	RW

7	6	5	4	3	2	1	0
Reserved		LED2_SEQ	LED1_SEQ	LED2_ON_TIME		LED1_ON_TIME	

Bits	Field Name	Description	Type	Reset
7:6	Reserved		RO R returns 0s	0x0
5	LED2_SEQ	When 1, LED2 will repeat 2 pulse sequence: ON (ON_TIME) - OFF (ON TIME) - ON (ON TIME) - OFF remainder of the period When 0, LED2 will generate 1 pulse: ON (ON_TIME) - OFF (ON TIME))	RW	0
4	LED1_SEQ	When 1, LED1 will repeat 2 pulse sequence: ON (ON_TIME) - OFF (ON TIME) - ON (ON TIME) - OFF remainder of the period. When 0, LED1 will generate 1 pulse: ON (ON_TIME) - OFF (ON TIME))	RW	0
3:2	LED2_ON_TIME	LED2 ON time: 00: 62.5 ms 01: 125 ms 10: 250 ms 11: 500 ms	RW	0x0
1:0	LED1_ON_TIME	LED1 ON time: 00: 62.5 ms 01: 125 ms 10: 250 ms 11: 500 ms	RW	0x0

Table 6-86. PWM_CTRL1_REG

Address Offset	0x6E
Instance	Reset Domain: GENERAL RESET
Description	PWM frequency
Type	RW

7	6	5	4	3	2	1	0
Reserved						PWM_FREQ	

Bits	Field Name	Description	Type	Reset
7:2	Reserved	Reserved bit	RO R returns 0s	0x00
1:0	PWM_FREQ	Frequency of PWM: 00: 500 Hz 01: 250 Hz 10: 125 Hz 11: 62.5 Hz	RW	0x0

Copyright © 2010–2018, Texas Instruments Incorporated

Table 6-87. PWM_CTRL2_REG

Address Offset	0x6F
Instance	Reset Domain: GENERAL RESET
Description	PWM duty cycle.
Type	RW

7	6	5	4	3	2	1	0
FREQ_DUTY_CYCLE							

Bits	Field Name	Description	Type	Reset
7:0	FREQ_DUTY_CYCLE	Duty cycle of PWM: 00000000: 0/256 ... 11111111: 255/256	RW	0x00

Table 6-88. SPARE_REG

Address Offset	0x70
Instance	Reset Domain: FULL RESET
Description	Spare functional register
Type	RW

7	6	5	4	3	2	1	0
SPARE							

Bits	Field Name	Description	Type	Reset
7:0	SPARE	Spare bits	RW	0x00

Table 6-89. VERNUM_REG

Address Offset	0x80
Instance	Reset Domain: FULL RESET
Description	Silicon version number
Type	RW

7	6	5	4	3	2	1	0
READ_BOOT	Reserved			VERNUM			

Bits	Field Name	Description	Type	Reset
7	READ_BOOT	To enable the read of the BOOT mode if you want to go to JTAG mode, this be must set to 1.	RW	0
6:4	Reserved	Reserved bit	RO R returns 0s	0x0
3:0	VERNUM	Value depending on silicon version number 0000 - Revision 1.0	RO	0x0

7 Applications, Implementation, and Layout

NOTE

Information in the following applications sections is not part of the TI component specification, and TI does not warrant its accuracy or completeness. TI's customers are responsible for determining suitability of components for their purposes. Customers should validate and test their design implementation to confirm system functionality.

7.1 Application Information

The TPS65911 device is an integrated power management IC (PMIC) available in a 98-pin 0.65-mm pitch BGA MicroStar Junior package. The device is designed for applications powered by one Li-Ion or Li-Ion polymer battery cell, 3-series Ni-MH cells, or a 5-V input supply. The device has three step-down converters, one step-down controller with external FETs to support high current rails, eight LDO regulators, nine GPIOs, and EERPOM-programmable power sequencing to support a variety of processors and system sequencing requirements.

The following sections include a typical application diagram, description of the recommended external components, and PCB layout guidelines. The *TPS65911x Schematic Checklist* is available and provides recommended connections for each pin.

7.2 Typical Application

The default voltages in Figure 7-1 reflect the TPS65911A configuration. Other TPS65911 device options may have different default voltages.

Copyright © 2010–2018, Texas Instruments Incorporated

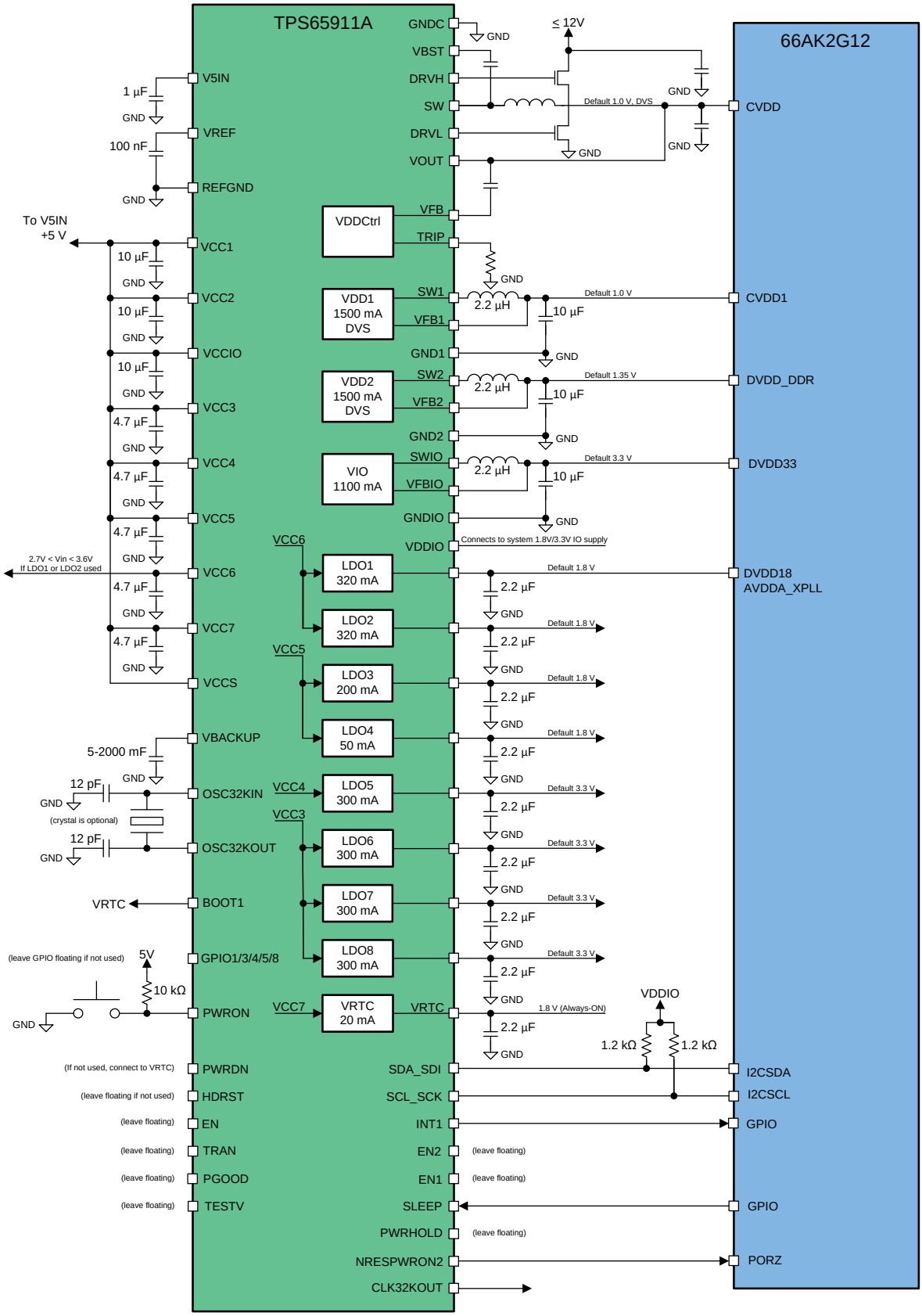

Figure 7-1. TPS65911A Typical Application

7.2.1 Design Requirements

For a typical application shown in Figure 7-1, Table 7-1 lists the primary design parameters of the power resources.

Table 7-1. Design Parameters

DESIGN PARAMETER	VALUE
Supply voltage	2.7 V to 5.5 V
VDD1 voltage	1 V
VDD1 current	Up to 1.5 A
VDD2 voltage	1.35 V
VDD2 current	Up to 1.5 A
VDDCtrl voltage	1 V
VDDCtrl current	See (1)
VIO voltage	3.3 V
VIO current	Up to 1.1 A
LDO1 voltage	1.8 V
LDO1 current	Up to 320 mA
LDO2 voltage	1.8 V
LDO2 current	Up to 320 mA
LDO3 voltage	1.8 V
LDO3 current	Up to 200 mA
LDO4 voltage	1.8 V
LDO4 current	Up to 50 mA
LDO5 voltage	3.3 V
LDO5 current	Up to 300 mA
LDO6 voltage	3.3 V
LDO6 current	Up to 300 mA
LDO7 voltage	3.3 V
LDO7 current	Up to 300 mA
LDO8 voltage	3.3 V
LDO8 current	Up to 300 mA

(1) Value is dependent on external FETs.

7.2.2 Detailed Design Procedure

7.2.2.1 External Component Recommendation

For crystal oscillator components, see Section 5.10. If RTC domain is expected to be maintained after shutdown, VCC7 must have enough capacitance to make sure that when supply is switched off, voltage does not fall at a rate faster than 10 mV/ms. This makes sure that RTC domain data is maintained.

Table 7-2. External Component Recommendation

PARAMETER	TEST CONDITIONS	MIN	NOM	MAX	UNIT
POWER REFERENCES					
VREF filtering capacitor ($C_{O(VREF)}$)	Connected from VREF to REFGND		100		nF
VDD1 SMPS					
Input capacitor ($C_{I(VCC1)}$)	X5R or X7R dielectric		10		µF
Output filter capacitor ($C_{O(VDD1)}$)	X5R or X7R dielectric	4	10	12	µF
C_O filter capacitor ESR	f = 3 MHz		10	300	mΩ

Copyright © 2010–2018, Texas Instruments Incorporated

Table 7-2. External Component Recommendation (continued)

PARAMETER	TEST CONDITIONS	MIN	NOM	MAX	UNIT
Inductor ($L_{O(VDD1)}$)			2.2		µH
L_O inductor DC resistor (DCR_L)				125	mΩ
VDD2 SMPS					
Input capacitor ($C_{I(VCC2)}$)	X5R or X7R dielectric		10		µF
Output filter capacitor ($C_{O(VDD2)}$)	X5R or X7R dielectric	4	10	12	µF
C_O filter capacitor ESR	f = 3 MHz		10	300	mΩ
Inductor ($L_{O(VDD2)}$)			2.2		µH
L_O inductor DC resistor (DCR_L)				125	mΩ
VIO SMPS					
Input capacitor ($C_{I(VCCIO)}$)	X5R or X7R dielectric		10		µF
Output filter capacitor ($C_{O(VIO)}$)	X5R or X7R dielectric	4	10	12	µF
C_O filter capacitor ESR	f = 3 MHz		10	300	mΩ
Inductor ($L_{O(VIO)}$)			2.2		µH
L_O inductor DC resistor (DCR_L)				125	mΩ
VDDCtrl SMPS					
Input capacitor (C_{VIN})			4 × 10		µF
High-side drive boost capacitor (C_{boost})			0.1		µF
Input capacitor for V5IN supply (C_{V5IN})			1		µF
Output filter capacitor ($C_{O(VDDCtrl)}$)			330		µF
C_O filter capacitor ESR			9	15	mΩ
Inductor ($L_{O(VDDCtrl)}$)			2.7		µH
L_O Inductor DC resistor (DCR_L)			20		mΩ
Trip resistance (R_{trip})			40		kΩ
Feed forward capacitor (C_1)			330		pF
FET FDMC7660					
LDO1					
Input capacitor ($C_{I(VCC6)}$)	X5R or X7R dielectric		4.7		µF
Output filtering capacitor ($C_{O(LDO1)}$)		0.8	2.2	2.64	µF
C_O filtering capacitor ESR		0		500	mΩ
LDO2					
Output filtering capacitor ($C_{O(LDO2)}$)		0.8	2.2	2.64	µF
C_O filtering capacitor ESR		0		500	mΩ
LDO3					
Input capacitor ($C_{I(VCC5)}$)	X5R or X7R dielectric		4.7		µF
Output filtering capacitor ($C_{O(LDO3)}$)		0.8	2.2	2.64	µF
C_O filtering capacitor ESR		0		500	mΩ
LDO4					
Output filtering capacitor ($C_{O(LDO4)}$)		0.8	2.2	2.64	µF
C_O filtering capacitor ESR		0		500	mΩ
LDO5					
Input capacitor ($C_{I(VCC4)}$)	X5R or X7R dielectric		4.7		µF
Output filtering capacitor ($C_{O(LDO5)}$)		0.8	2.2	2.64	µF
C_O filtering capacitor ESR		0		500	mΩ
LDO6					
Input capacitor ($C_{I(VCC3)}$)	X5R or X7R dielectric		4.7		µF
Output filtering capacitor ($C_{O(LDO6)}$)		0.8	2.2	2.64	µF

Copyright © 2010–2018, Texas Instruments Incorporated

Table 7-2. External Component Recommendation (continued)

PARAMETER	TEST CONDITIONS	MIN	NOM	MAX	UNIT
C_O filtering capacitor ESR		0		500	mΩ
LDO7					
Output filtering capacitor ($C_{O(LDO7)}$)		0.8	2.2	2.64	µF
C_O filtering capacitor ESR		0		500	mΩ
LDO8					
Output filtering capacitor ($C_{O(LDO8)}$)		0.8	2.2	2.64	µF
C_O filtering capacitor ESR		0		500	mΩ
VRTC LDO					
Input capacitor ($C_{I(VCC7)}$)	X5R or X7R dielectric		4.7		µF
Output filtering capacitor ($C_{O(VRTC)}$)		0.8	2.2	2.64	µF
C_O filtering capacitor ESR		0		500	mΩ
BACKUP BATTERY					
Backup battery capacitor (C_{BB})		5	10	2000	mF
Series resistors	C_{BB} = 5 mF to 15 mF	10		1500	Ω

7.2.2.2 Controller Design Procedure

Follow these steps to design the controller:

1. Design the output filter
2. Select the FETs
3. Select the bootstrap capacitor
4. Select the input capacitors
5. Set the current limits

VDDCtrl requires a 5-V supply at the V5IN pin with an input capacitor. For most applications, a 1-µF, X5R, 20%, 10-V, or similar capacitor must be used for decoupling.

7.2.2.2.1 Inductor Selection

An inductor must be placed between the external FETs and the output capacitors. Together, the inductor and output capacitors make the double-pole that contributes to stability. In addition, the inductor is directly responsible for the output ripple, efficiency, and transient performance. As the inductance increases, the ripple current decreases, which typically results in an increased efficiency. However, with an increase in inductance, the transient performance decreases. Finally, the selected inductor must be rated for the appropriate saturation current, core losses, and DC resistance (DCR). Use Equation 1 to calculate the recommended inductance for the controller (L).

$$L = \frac{V_{OUT} \times (V_{IN} - V_{OUT})}{V_{IN} \times f_{SW} \times I_{OUT\,max} \times K_{IND}}$$

where

- V_{OUT} is the typical output voltage.
- V_{IN} is the typical input voltage.
- f_{SW} is the typical switching frequency.
- I_{OUTmax} is the maximum load current.
- K_{IND} is the ratio of $I_{Lripple}$ to the I_{OUTmax}. For this application, TI recommends that K_{IND} is set to a value from 0.2 to 0.4. (1)

After selecting the value of the inductor, use Equation 2 to calculate the peak current for the inductor in steady state operation, I_{Lmax}. The rated saturation current of the inductor must be greater than the I_{Lmax} current.

Copyright © 2010–2018, Texas Instruments Incorporated

$$I_{L\,max} = \frac{V_{OUT} \times (V_{IN} - V_{OUT})}{V_{IN} \times f_{SW} \times I_{OUT\,max} \times K_{IND}} \quad (2)$$

Following Equation 1 and Equation 2, the preferred inductor for VDDCtrl is 2.7 µH, with a DCR of approximately 20 mΩ.

7.2.2.2.2 Selecting the R_{TRIP} Resistor

The TRIP pin is used to set the VDDCtrl current limit. The load current is sensed by measuring the voltage over the low-side FET and comparing it to the voltage at the TRIP pin, V_{TRIP}, with an 8:1 ratio. If the low-side FET is greater than an eighth of V_{TRIP}, the VDDCtrl rail shuts down.

The TRIP resistor then adjusts the range of the VDDCtrl load current monitoring. Use Equation 3 to calculate the value of the TRIP resistor (R_{TRIP}) for the application and selected external FETs.

$$R_{TRIP} = \frac{8 \times I_{OUT\,max} \times R_{DS(on)}}{I_{TRIP}}$$

where

- I_{OUTmax} is the maximum load current.
- I_{TRIP} is the current through the TRIP pin, estimated at 10 µA.
- $R_{DS(on)}$ is the on resistance from the external FETs. (3)

7.2.2.2.3 Selecting the Output Capacitors

Texas Instruments recommends using ceramic capacitors with low ESR values to provide the lowest output voltage ripple. The output capacitor requires an X7R or an X5R dielectric. Y5V and Z5U dielectric capacitors, aside from their wide variation in capacitance over temperature, become resistive at high frequencies. At light load currents, the controller operates in PFM mode, and the output voltage ripple is dependent on the output-capacitor value and the PFM peak inductor current. Higher output-capacitor values minimize the voltage ripple in PFM mode. To achieve specified regulation performance and low output voltage ripple, the DC-bias characteristic of ceramic capacitors must be considered. The effective capacitance of ceramic capacitors drops with increasing DC bias voltage. TI recommends the use of small ceramic capacitors placed between the inductor and load with many vias to the power-ground (PGND) plane for the output capacitors of the controller. This solution typically provides the smallest and lowest cost solution available for DCAP controllers. The selection of the output capacitor is typically driven by the output transient response. Equation 4 provides a rough estimate of the minimum required capacitance to make sure the transient response is correct.

$$C_{OUT} > \frac{I_{TRAN(max)}^{2} \times L}{(V_{IN} - V_{OUT}) \times V_{OVER}}$$

where

- $I_{TRAN(max)}$ is the maximum load current step.
- L is the selected inductance.
- V_{OUT} is the minimum programmed output voltage.
- V_{IN} is the maximum input voltage.
- V_{OVER} is the maximum allowable overshoot from programmed voltage. (4)

Because the transient response is affected significantly by the board layout, some experimentation is expected to confirm that values derived in this section are applicable to any particular use case. Equation 4 is not provided as an absolute requirement, but as a starting point. Alternatively, lists recommended capacitor values.

7.2.2.2.4 Selecting FETs

This controller is designed to drive two n-channel MOSFETs. Typically, lower $R_{DS(on)}$ values are better for improving the overall efficiency of the controller, however higher gate-charge thresholds result in lower efficiency so these two values must be balanced for optimal performance. As the $R_{DS(on)}$ for the low-side FET decreases, the minimum current limit increases. Therefore, make sure the appropriate values are selected for the FETs, inductor, output capacitors, and current limit resistor. The Texas Instruments' CSD87330Q3D device is a recommended for the controller, depending on the required maximum current.

7.2.2.2.5 Bootstrap Capacitor

To make sure the internal high-side gate drivers are supplied with a stable low-noise supply voltage, a capacitor must be connected between the SW pin and the VBST pin. TI recommends placing ceramic capacitors with a value of 0.1 μF for the controller. TI recommends reserving a small resistor in series with the bootstrap capacitor in case the turnon and turnoff of the FETs must be slowed to decrease voltage ringing on the switch node, which is a common practice for controller design.

7.2.2.2.6 Selecting Input Capacitors

Because of the nature of the switching controller with a pulsating input current, a low ESR input capacitor is required for the best input-voltage filtering and also to minimize the interference with other circuits caused by high input-voltage spikes. For the controller, a typical 1-μF capacitor can be used for the V5IN pin to support the transients on the driver. For the FET input, 40 μF of input capacitance is recommended for most applications. To achieve the low ESR requirement, a ceramic capacitor is recommended. However, the voltage rating and DC-bias characteristic of ceramic capacitors must be considered. For better input-voltage filtering, the input capacitor can be increased without any limit. TI recommends placing a ceramic capacitor as near as possible to the FET across the respective VSYS and PGND pins of the FETs.

NOTE

Use the correct value for the ceramic capacitor capacitance after derating to achieve the recommended input capacitance.

7.2.2.3 Converter Design Procedure

7.2.2.3.1 Selecting the Inductor

An inductor must be placed between the external FETs and the output capacitors. Together, the inductor and output capacitors form a double pole in the control loop that contributes to stability. In addition, the inductor is directly responsible for the output ripple, efficiency, and transient performance. As the inductance increases, the ripple current decreases, which typically results in an increase in efficiency. However, with an increase in inductance, the transient performance decreases. Finally, the selected inductor must be rated for the appropriate saturation current, core losses, and DC resistance (DCR).

NOTE

The internal parameters for the converters are optimized for a 2.2-μH inductor, however using other inductor values is possible as long as they are carefully selected and thoroughly tested.

Use Equation 5 to calculate the recommended inductance for the converter.

$$L = \frac{V_{OUT} \times (V_{IN} - V_{OUT})}{V_{IN} \times f_{SW} \times I_{OUT\,max} \times K_{IND}}$$

where

- V_{OUT} is the typical output voltage.

Copyright © 2010–2018, Texas Instruments Incorporated

- V_{IN} is the typical input voltage.
- f_{SW} is the typical switching frequency.
- I_{OUTmax} is the maximum load current.
- K_{IND} is the ratio of $I_{Lripple}$ to the I_{OUTmax}. For this application, TI recommends that K_{IND} is set to a value from 0.2 to 0.4. (5)

After selecting the value of the inductor, use Equation 6 to calculate the peak current for the inductor in steady state operation, I_{Lmax}. The rated current of the inductor must be greater than the I_{Lmax} current.

$$I_{Lmax} = \frac{V_{OUT} \times (V_{IN} - V_{OUT})}{2 \times V_{IN} \times f_{SW} \times L} \tag{6}$$

7.2.2.3.2 Selecting Output Capacitors

TI recommends ceramic capacitors with low ESR values because they provide the lowest output voltage ripple. The output capacitor requires either an X7R or X5R rating. Y5V and Z5U capacitors, aside from the wide variation in capacitance over temperature, become resistive at high frequencies. At light load currents, the converter operates in PFM mode and the output voltage ripple is dependent on the output-capacitor value and the PFM peak inductor current. Higher output-capacitor values minimize the voltage ripple in PFM mode. To achieve specified regulation performance and low output voltage ripple, the DC-bias characteristic of ceramic capacitors must be considered. The effective capacitance of ceramic capacitors drops with increasing DC-bias voltage. For the output capacitors of the BUCK converters, TI recommends placing small ceramic capacitors between the inductor and load with many vias to the PGND plane. This solution typically provides the smallest and lowest-cost solution available for the converters. The output capacitance must equal to or greater than the minimum capacitance listed for VDD1, VDD2, and VIO (assuming quality layout techniques are followed). The recommended value is 10 µF.

7.2.2.3.3 Selecting Input Capacitors

Because of the nature of the switching converter with a pulsating input current, a low ESR input capacitor is required for the best input-voltage filtering and to minimize the interference with other circuits caused by high input-voltage spikes. For the VCC1, VCC2, and VCCIO pins, 10 µF of input capacitance (after derating) is required for most applications. A ceramic capacitor is recommended to achieve the low ESR requirement. However, the voltage rating and DC-bias characteristic of ceramic capacitors must be considered. The input capacitor can be increased without any limit for better input-voltage filtering.

NOTE

Use the correct value for the ceramic capacitor capacitance after derating to achieve the recommended input capacitance.

7.2.3 Application Curves

VCC1 = 3.8 V Vout = 1.2 V PWM Mode

Figure 7-2. VDD1 Falling Load Transient Response

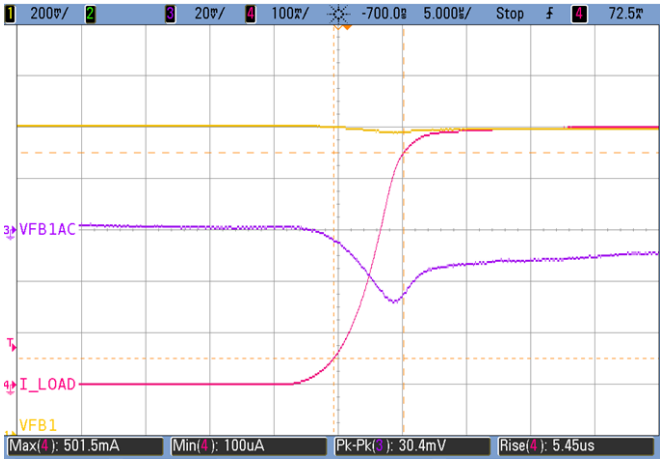

VCC1 = 3.8 V Vout = 1.2 V PWM Mode

Figure 7-3. VDD1 Rising Load Transient Response

VCC2 = 3.8 V Vout = 1.2 V PWM Mode

Figure 7-4. VDD2 Falling Load Transient Response

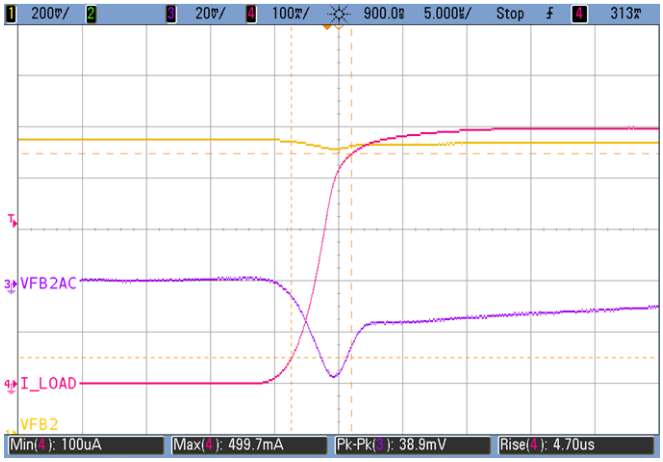

VCC2 = 3.8 V Vout = 1.2 V PWM Mode

Figure 7-5. VDD2 Rising Load Transient Response

VCCIO = 3.8 V Vout = 1.8 V PWM Mode

Figure 7-6. VDDIO Falling Load Transient Response

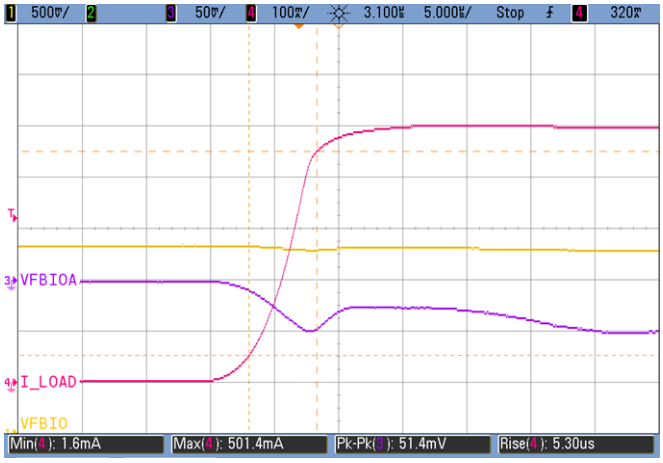

VCCIO = 3.8 V Vout = 1.8 V PWM Mode

Figure 7-7. VDDIO Rising Load Transient Response

Copyright © 2010–2018, Texas Instruments Incorporated

7.2.4 Layout Guidelines

7.2.4.1 PCB Layout

As with all switching power supplies, the layout is an important step in the design. Proper layout is important for stability, EMI, as well as achieve higher efficiency and load transient response.

- Place the input capacitors as close as possible to the input pins on the IC, and on the same side of the board as the IC.
- Place the inductor and output capacitor close to the switch node of the IC.
- Use a solid ground plane for the GND of the buck converters and controller, and use plenty of vias.
- Keep the loop area formed by switch node, inductor, output capacitor, and ground as small as possible.
- Route the analog grounds separately from the power grounds, and connect them at the ground plane.
- Use short, wide traces for any trace which carries high current like regulator input, output, and ground traces.

For more detailed guidelines, refer to the *TPS65911 Layout Guidelines*.

7.2.5 Layout Example

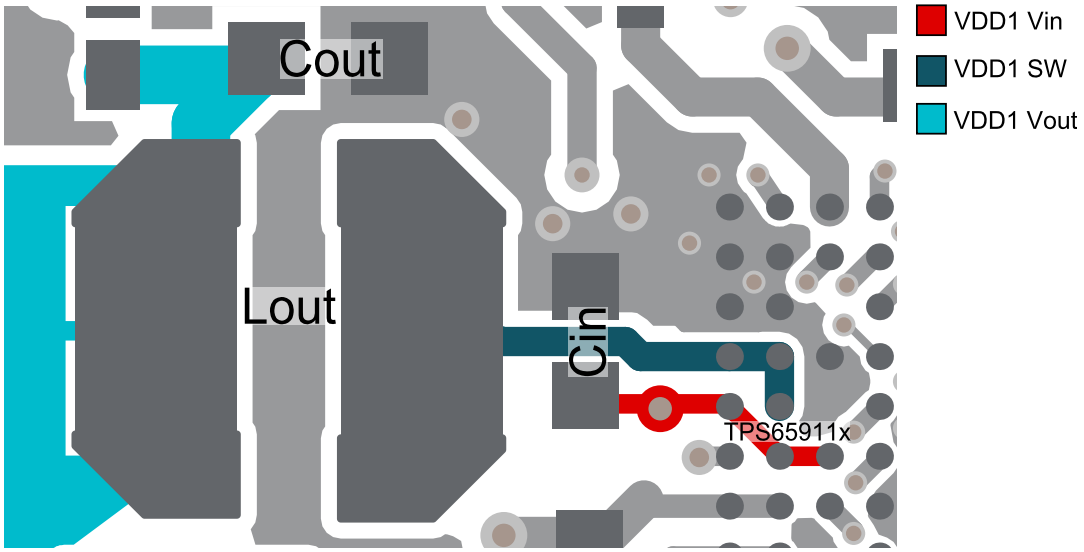

Figure 7-8. VDD1 Layout

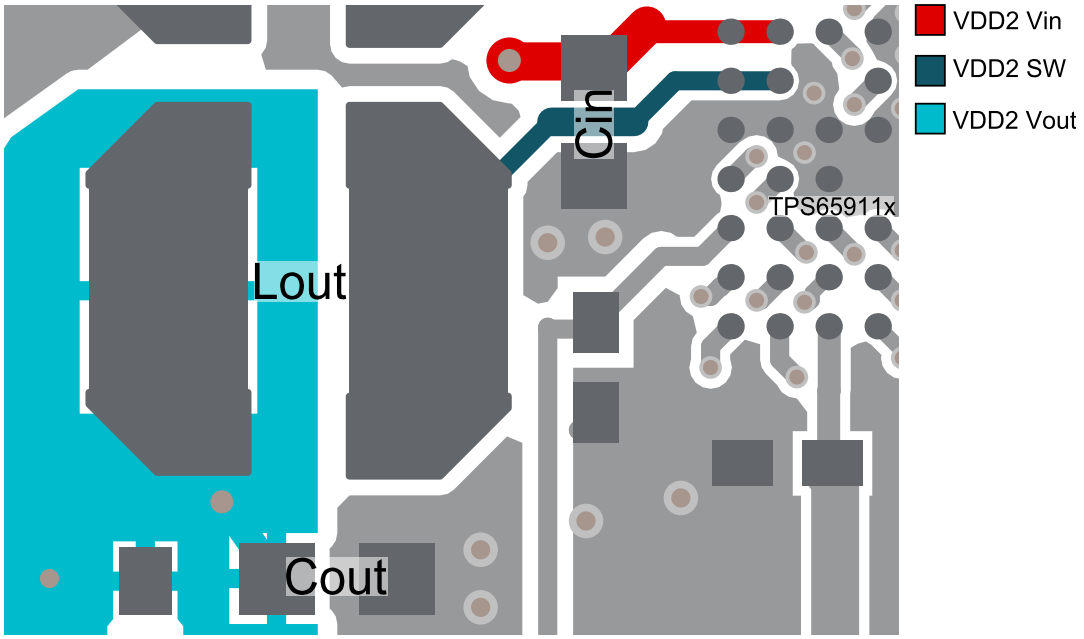

Figure 7-9. VDD2 Layout

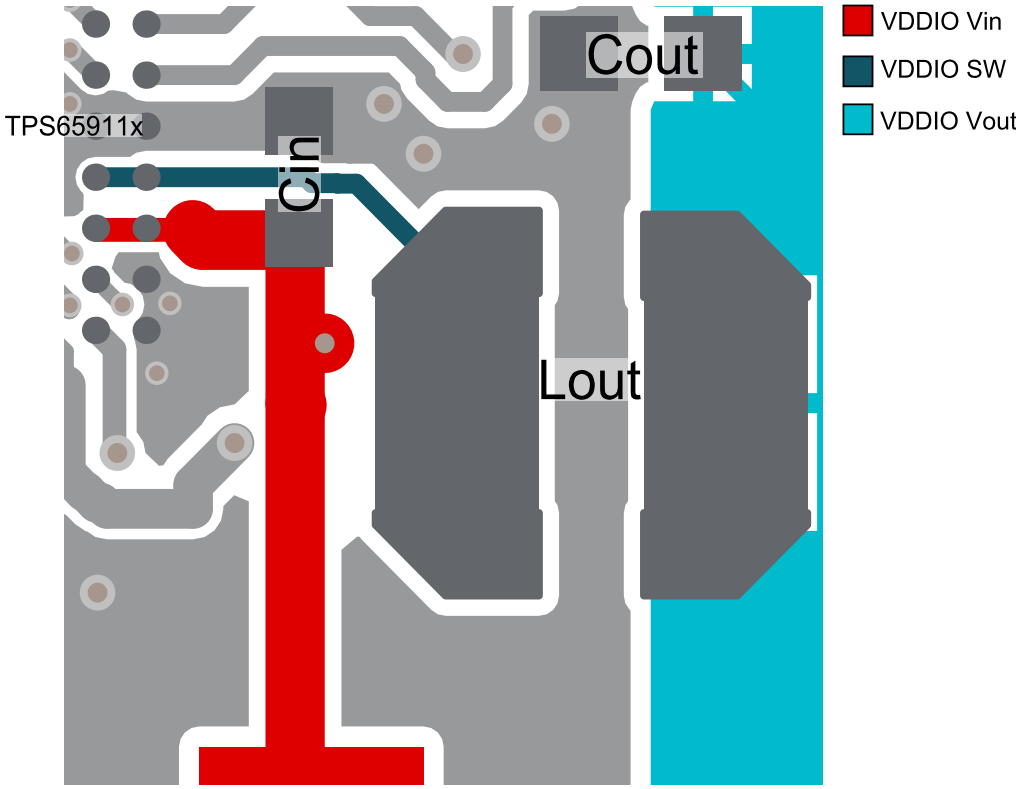

Figure 7-10. VDDIO Layout

Copyright © 2010–2018, Texas Instruments Incorporated

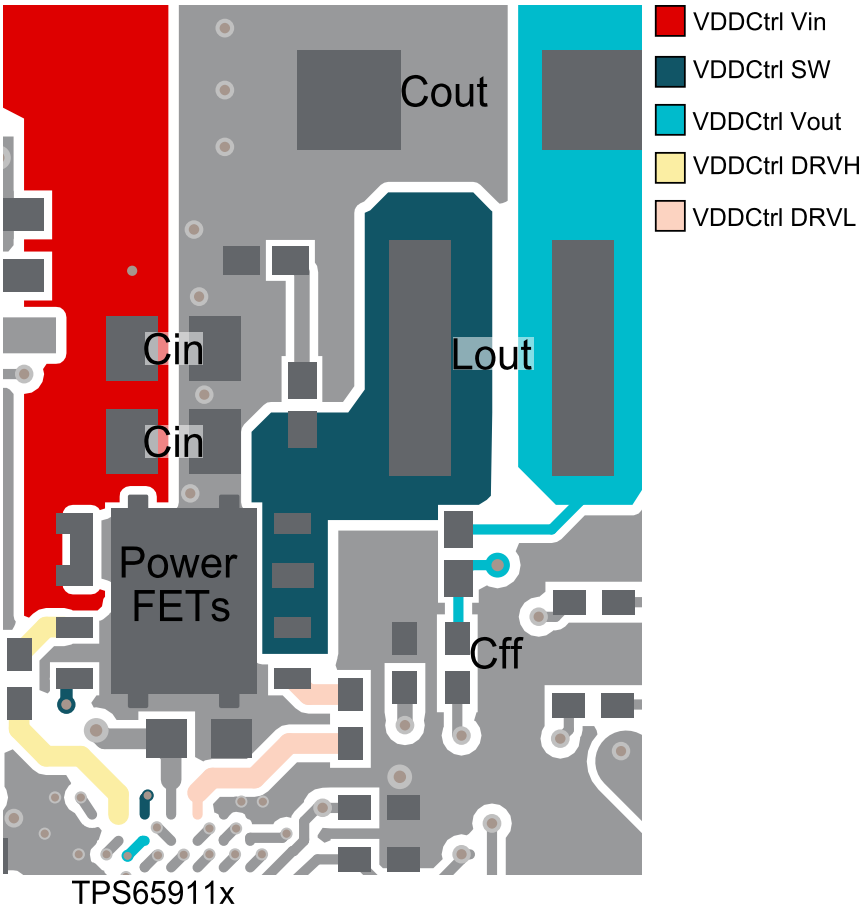

Figure 7-11. VDDCtrl Layout

7.3 Power Supply Recommendations

The TPS65911 device uses a supply voltage from 2.7 V to 5.5 V. The input supply should be well regulated and connected to the VCC input pins. Add external capacitors at each of the device supply pins as described in Table 7-2.

8 Device and Documentation Support

8.1 Device Support

8.1.1 Development Support

For development support, see the following:

- 66AK2G02 DSP + ARM Processor Audio Processing Reference Design
- 66AK2G02 DSP + ARM Processor Power Solution Reference Design
- DDR ECC Reference Design to Improve Memory Reliability in 66AK2G02-based Systems
- Freescale i.MX6 Dual&Quad Power Reference Design with TPS65911
- Freescale i.MX6 Power Reference Design for Electronic Point of Sale Applications

8.1.2 Device Nomenclature

Table 8-1 lists the acronyms and abbreviations used in this document.

Table 8-1. Acronyms, Abbreviations, and Definitions

ACRONYM OR ABBREVIATION	DEFINITION
DDR	Dual-Data Rate (memory)
ES	Engineering Sample
ESD	Electrostatic Discharge
FET	Field Effect Transistor
EPC	Embedded Power Controller
FSM	Finite State Machine
GND	Ground
GPIO	General-Purpose I/O
HBM	Human Body Model
HD	Hot-Die
HS-I^2C	High-Speed I^2C
I^2C	Inter-Integrated Circuit
IC	Integrated Circuit
ID	Identification
IDDQ	Quiescent supply current
IEEE	Institute of Electrical and Electronics Engineers
IR	Instruction Register
I/O	Input/Output
JEDEC	Joint Electron Device Engineering Council
JTAG	Joint Test Action Group
LBC7	Lin Bi-CMOS 7 (360 nm)
LDO	Low Drop Output voltage linear regulator
LP	Low-Power application mode
LSB	Least Significant Bit
MMC	Multimedia Card
MOSFET	Metal Oxide Semiconductor Field Effect Transistor
NVM	Nonvolatile Memory
OD	Open Drain
OMAP™	Open Multimedia Application Platform™
RTC	Real-Time Clock

Copyright © 2010–2018, Texas Instruments Incorporated

Table 8-1. Acronyms, Abbreviations, and Definitions (continued)

ACRONYM OR ABBREVIATION	DEFINITION
SMPS	Switched Mode Power Supply
SPI	Serial Peripheral Interface
POR	Power-On Reset

8.2 Documentation Support

8.2.1 Related Documentation

For related documentation see the following:

- Texas Instruments, *CSD87330Q3D Synchronous Buck NexFET™ Power Block* data sheet
- Texas Instruments, *Empowering Designs With Power Management IC (PMIC) for Processor Applications* application report
- Texas Instruments, *Basic Calculation of a Buck Converter's Power Stage* application report
- Texas Instruments, *TPS65911x Schematic Checklist*
- Texas Instruments, *TPS65911 Layout Guidelines*
- Texas Instruments, *TPS65911A User's Guide for 66AK2G12 Processor*
- Texas Instruments, *TPS659114 for Freescale i.MX6 Dual/Quad User's Guide*
- Texas Instruments, *TPS659118 User's Guide for 66AK2G02 Processor*
- Texas Instruments, *TPS6591133 Centaurus User Guide*
- Texas Instruments, *TPS659113 Centaurus User Guide*
- Texas Instruments, *TPS659112 Netra User Guide*

8.3 Receiving Notification of Documentation Updates

To receive notification of documentation updates, navigate to the device product folder on ti.com. In the upper right corner, click on *Alert me* to register and receive a weekly digest of any product information that has changed. For change details, review the revision history included in any revised document.

8.4 Community Resources

8.4.1 Community Resources

The following links connect to TI community resources. Linked contents are provided "AS IS" by the respective contributors. They do not constitute TI specifications and do not necessarily reflect TI's views; see TI's Terms of Use.

TI E2E™ Online Community The TI engineer-to-engineer (E2E) community was created to foster collaboration among engineers. At e2e.ti.com, you can ask questions, share knowledge, explore ideas and help solve problems with fellow engineers.

Design Support ***TI's Design Support*** Quickly find helpful E2E forums along with design support tools and contact information for technical support.

8.5 Trademarks

MicroStar Junior, OMAP, NexFET, E2E are trademarks of Texas Instruments.
All other trademarks are the property of their respective owners.

8.6 Electrostatic Discharge Caution

This integrated circuit can be damaged by ESD. Texas Instruments recommends that all integrated circuits be handled with appropriate precautions. Failure to observe proper handling and installation procedures can cause damage.

ESD damage can range from subtle performance degradation to complete device failure. Precision integrated circuits may be more susceptible to damage because very small parametric changes could cause the device not to meet its published specifications.

8.7 Glossary

TI Glossary This glossary lists and explains terms, acronyms, and definitions.

9 Mechanical, Packaging, and Orderable Information

The following pages include mechanical packaging and orderable information. This information is the most current data available for the designated devices. This data is subject to change without notice and revision of this document. For browser-based versions of this data sheet, refer to the left-hand navigation.

9.1 Package Description

The following table lists the package descriptions for the TPS65911 PMU devices:

PACKAGE	TPS65911
Type	ZRC98 BGA MicroStar Junior™
Size (mm)	6 × 9
Substrate layers	1 layer
Pitch ball array (mm)	0.65 mm
Number of balls	98
Thickness (mm) (maximum height including balls)	1 mm

Copyright © 2010–2018, Texas Instruments Incorporated

PACKAGING INFORMATION

Orderable Device	Status (1)	Package Type	Package Drawing	Pins	Package Qty	Eco Plan (2)	Lead finish/ Ball material (6)	MSL Peak Temp (3)	Op Temp (°C)	Device Marking (4/5)	Samples
TPS6591102A2ZRCR	LIFEBUY	BGA MICROSTAR JUNIOR	ZRC	98	2500	Green (RoHS & no Sb/Br)	SNAGCU	Level-3-260C-168 HR	-40 to 85	TPS6591102A2	
TPS6591102AA2ZRCR	LIFEBUY	BGA MICROSTAR JUNIOR	ZRC	98	2500	Green (RoHS & no Sb/Br)	SNAGCU	Level-3-260C-168 HR	-40 to 85	TPS6591102AA2	
TPS6591103A2ZRCR	LIFEBUY	BGA MICROSTAR JUNIOR	ZRC	98	2500	Green (RoHS & no Sb/Br)	SNAGCU	Level-3-260C-168 HR	-40 to 85	TPS6591103A2	
TPS6591104A2ZRC	LIFEBUY	BGA MICROSTAR JUNIOR	ZRC	98	240	Green (RoHS & no Sb/Br)	SNAGCU	Level-3-260C-168 HR	-40 to 85	TPS6591104A2	
TPS6591104A2ZRCR	LIFEBUY	BGA MICROSTAR JUNIOR	ZRC	98	2500	Green (RoHS & no Sb/Br)	SNAGCU	Level-3-260C-168 HR	-40 to 85	TPS6591104A2	
TPS6591104DA2NMA	PREVIEW	NFBGA	NMA	98	240	Green (RoHS & no Sb/Br)	SNAGCU	Level-3-260C-168 HR	-40 to 85	6591104DA2NMA	
TPS6591104DA2ZRC	ACTIVE	BGA MICROSTAR JUNIOR	ZRC	98	240	Green (RoHS & no Sb/Br)	SNAGCU	Level-3-260C-168 HR	-40 to 85	TPS6591104DA2	Samples
TPS6591104EA2ZRCR	LIFEBUY	BGA MICROSTAR JUNIOR	ZRC	98	2500	Green (RoHS & no Sb/Br)	SNAGCU	Level-3-260C-168 HR	-40 to 85	T6591104EA2	
TPS65911062A2NMARP	PREVIEW	NFBGA	NMA	98	2500	Green (RoHS & no Sb/Br)	SNAGCU	Level-3-260C-168 HR	-40 to 85	65911062A2NMA	
TPS6591106A2ZRCR	LIFEBUY	BGA MICROSTAR JUNIOR	ZRC	98	2500	Green (RoHS & no Sb/Br)	SNAGCU	Level-3-260C-168 HR	-40 to 85	T6591106A2	
TPS6591109A2ZRCR	LIFEBUY	BGA MICROSTAR JUNIOR	ZRC	98	2500	Green (RoHS & no Sb/Br)	SNAGCU	Level-3-260C-168 HR	-40 to 85	TPS6591109A2	
TPS659110A2NMAR	PREVIEW	NFBGA	NMA	98	2500	Green (RoHS & no Sb/Br)	SNAGCU	Level-3-260C-168 HR	-40 to 85	659110A2NMA	

Orderable Device	Status (1)	Package Type	Package Drawing	Pins	Package Qty	Eco Plan (2)	Lead finish/ Ball material (6)	MSL Peak Temp (3)	Op Temp (°C)	Device Marking (4/5)	Samples
TPS659110A2ZRCR	ACTIVE	BGA MICROSTAR JUNIOR	ZRC	98	2500	Green (RoHS & no Sb/Br)	SNAGCU	Level-3-260C-168 HR	-40 to 85	TPS659110A2	Samples
TPS659112A2NMAR	PREVIEW	NFBGA	NMA	98	2500	Green (RoHS & no Sb/Br)	SNAGCU	Level-3-260C-168 HR	-40 to 85	659112A2NMA	
TPS659112A2ZRCR	ACTIVE	BGA MICROSTAR JUNIOR	ZRC	98	2500	Green (RoHS & no Sb/Br)	SNAGCU	Level-3-260C-168 HR	-40 to 85	TPS659112A2	Samples
TPS6591133A2NMAR	PREVIEW	NFBGA	NMA	98	240	TBD	Call TI	Call TI	-40 to 85		
TPS6591133A2ZRC	ACTIVE	BGA MICROSTAR JUNIOR	ZRC	98	240	Green (RoHS & no Sb/Br)	SNAGCU	Level-3-260C-168 HR	-40 to 85	TPS6591133A2	Samples
TPS6591133A2ZRCR	LIFEBUY	BGA MICROSTAR JUNIOR	ZRC	98	2500	Green (RoHS & no Sb/Br)	SNAGCU	Level-3-260C-168 HR	-40 to 85	TPS6591133A2	
TPS659113A2ZRC	LIFEBUY	BGA MICROSTAR JUNIOR	ZRC	98	240	Green (RoHS & no Sb/Br)	SNAGCU	Level-3-260C-168 HR	-40 to 85	TPS659113A2	
TPS659113A2ZRCR	LIFEBUY	BGA MICROSTAR JUNIOR	ZRC	98	2500	Green (RoHS & no Sb/Br)	SNAGCU	Level-3-260C-168 HR	-40 to 85	TPS659113A2	
TPS659114A2NMAR	PREVIEW	NFBGA	NMA	98	2500	Green (RoHS & no Sb/Br)	SNAGCU	Level-3-260C-168 HR	-40 to 85	659114A2NMA	
TPS659114A2ZRCR	ACTIVE	BGA MICROSTAR JUNIOR	ZRC	98	2500	Green (RoHS & no Sb/Br)	SNAGCU	Level-3-260C-168 HR	-40 to 85	659114A2	Samples
TPS65911AA2NMAR	PREVIEW	NFBGA	NMA	98	2500	Green (RoHS & no Sb/Br)	SNAGCU	Level-3-260C-168 HR	-40 to 85	65911AA2NMA	
TPS65911AA2NMAT	PREVIEW	NFBGA	NMA	98	250	Green (RoHS & no Sb/Br)	SNAGCU	Level-3-260C-168 HR	-40 to 85	65911AA2NMA	
TPS65911AA2ZRCR	LIFEBUY	BGA MICROSTAR JUNIOR	ZRC	98	2500	Green (RoHS & no Sb/Br)	SNAGCU	Level-3-260C-168 HR	-40 to 85	65911AA2	
TPS65911AA2ZRCT	LIFEBUY	BGA MICROSTAR JUNIOR	ZRC	98	250	Green (RoHS & no Sb/Br)	SNAGCU	Level-3-260C-168 HR	-40 to 85	65911AA2	

(1) The marketing status values are defined as follows:
ACTIVE: Product device recommended for new designs.
LIFEBUY: TI has announced that the device will be discontinued, and a lifetime-buy period is in effect.
NRND: Not recommended for new designs. Device is in production to support existing customers, but TI does not recommend using this part in a new design.
PREVIEW: Device has been announced but is not in production. Samples may or may not be available.
OBSOLETE: TI has discontinued the production of the device.

(2) **RoHS:** TI defines "RoHS" to mean semiconductor products that are compliant with the current EU RoHS requirements for all 10 RoHS substances, including the requirement that RoHS substance do not exceed 0.1% by weight in homogeneous materials. Where designed to be soldered at high temperatures, "RoHS" products are suitable for use in specified lead-free processes. TI may reference these types of products as "Pb-Free".
RoHS Exempt: TI defines "RoHS Exempt" to mean products that contain lead but are compliant with EU RoHS pursuant to a specific EU RoHS exemption.
Green: TI defines "Green" to mean the content of Chlorine (Cl) and Bromine (Br) based flame retardants meet JS709B low halogen requirements of <=1000ppm threshold. Antimony trioxide based flame retardants must also meet the <=1000ppm threshold requirement.

(3) MSL, Peak Temp. - The Moisture Sensitivity Level rating according to the JEDEC industry standard classifications, and peak solder temperature.

(4) There may be additional marking, which relates to the logo, the lot trace code information, or the environmental category on the device.

(5) Multiple Device Markings will be inside parentheses. Only one Device Marking contained in parentheses and separated by a "~" will appear on a device. If a line is indented then it is a continuation of the previous line and the two combined represent the entire Device Marking for that device.

(6) Lead finish/Ball material - Orderable Devices may have multiple material finish options. Finish options are separated by a vertical ruled line. Lead finish/Ball material values may wrap to two lines if the finish value exceeds the maximum column width.

Important Information and Disclaimer: The information provided on this page represents TI's knowledge and belief as of the date that it is provided. TI bases its knowledge and belief on information provided by third parties, and makes no representation or warranty as to the accuracy of such information. Efforts are underway to better integrate information from third parties. TI has taken and continues to take reasonable steps to provide representative and accurate information but may not have conducted destructive testing or chemical analysis on incoming materials and chemicals. TI and TI suppliers consider certain information to be proprietary, and thus CAS numbers and other limited information may not be available for release.

In no event shall TI's liability arising out of such information exceed the total purchase price of the TI part(s) at issue in this document sold by TI to Customer on an annual basis.

TAPE AND REEL INFORMATION

REEL DIMENSIONS

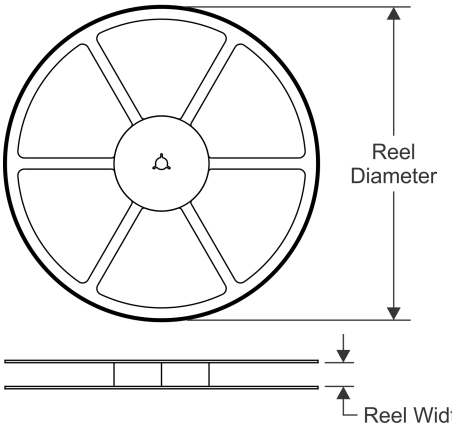

TAPE DIMENSIONS

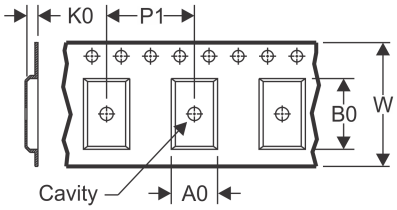

A0	Dimension designed to accommodate the component width
B0	Dimension designed to accommodate the component length
K0	Dimension designed to accommodate the component thickness
W	Overall width of the carrier tape
P1	Pitch between successive cavity centers

QUADRANT ASSIGNMENTS FOR PIN 1 ORIENTATION IN TAPE

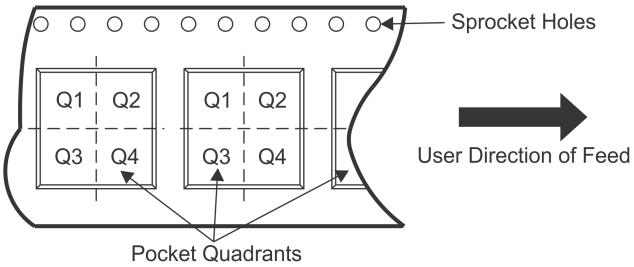

*All dimensions are nominal

Device	Package Type	Package Drawing	Pins	SPQ	Reel Diameter (mm)	Reel Width W1 (mm)	A0 (mm)	B0 (mm)	K0 (mm)	P1 (mm)	W (mm)	Pin1 Quadrant
TPS6591102A2ZRCR	BGA MICROSTAR JUNIOR	ZRC	98	2500	330.0	16.4	6.3	9.3	1.5	12.0	16.0	Q1
TPS6591104A2ZRCR	BGA MICROSTAR JUNIOR	ZRC	98	2500	330.0	16.4	6.3	9.3	1.5	12.0	16.0	Q1
TPS6591104EA2ZRCR	BGA MICROSTAR JUNIOR	ZRC	98	2500	330.0	16.4	6.3	9.3	1.5	12.0	16.0	Q1
TPS6591106A2ZRCR	BGA MICROSTAR JUNIOR	ZRC	98	2500	330.0	16.4	6.3	9.3	1.5	12.0	16.0	Q1
TPS6591109A2ZRCR	BGA MICROSTAR JUNIOR	ZRC	98	2500	330.0	16.4	6.3	9.3	1.5	12.0	16.0	Q1
TPS659110A2ZRCR	BGA MICROSTAR JUNI	ZRC	98	2500	330.0	16.4	6.3	9.3	1.5	12.0	16.0	Q1

Device	Package Type	Package Drawing	Pins	SPQ	Reel Diameter (mm)	Reel Width W1 (mm)	A0 (mm)	B0 (mm)	K0 (mm)	P1 (mm)	W (mm)	Pin1 Quadrant
	OR											
TPS659112A2ZRCR	BGA MICROSTAR JUNIOR	ZRC	98	2500	330.0	16.4	6.3	9.3	1.5	12.0	16.0	Q1
TPS6591133A2ZRCR	BGA MICROSTAR JUNIOR	ZRC	98	2500	330.0	16.4	6.3	9.3	1.5	12.0	16.0	Q1
TPS659113A2ZRCR	BGA MICROSTAR JUNIOR	ZRC	98	2500	330.0	16.4	6.3	9.3	1.5	12.0	16.0	Q1
TPS659114A2ZRCR	BGA MICROSTAR JUNIOR	ZRC	98	2500	330.0	16.4	6.3	9.3	1.5	12.0	16.0	Q1
TPS65911AA2ZRCR	BGA MICROSTAR JUNIOR	ZRC	98	2500	330.0	16.4	6.3	9.3	1.5	12.0	16.0	Q1
TPS65911AA2ZRCT	BGA MICROSTAR JUNIOR	ZRC	98	250	330.0	16.4	6.3	9.3	1.5	12.0	16.0	Q1

TAPE AND REEL BOX DIMENSIONS

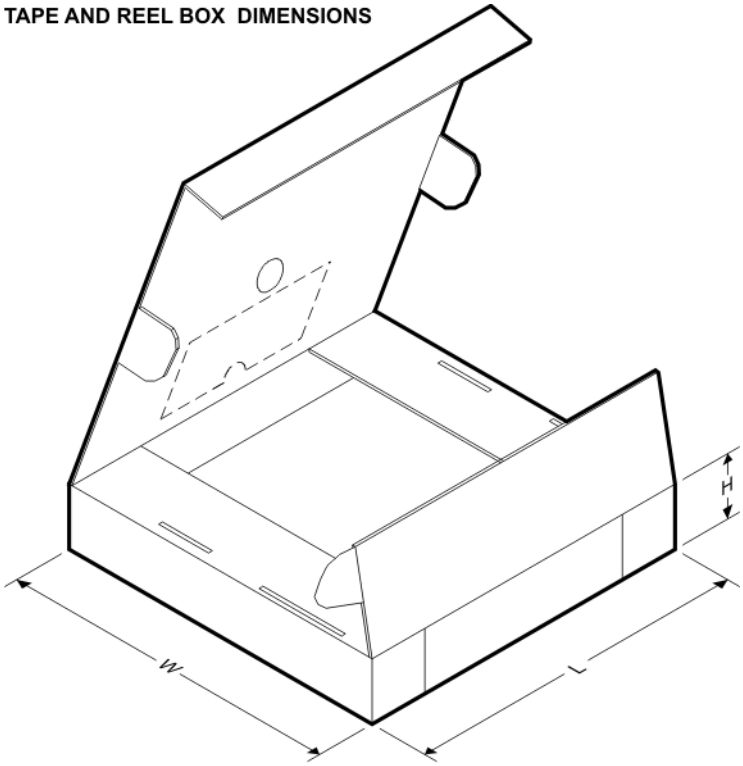

*All dimensions are nominal

Device	Package Type	Package Drawing	Pins	SPQ	Length (mm)	Width (mm)	Height (mm)
TPS6591102A2ZRCR	BGA MICROSTAR JUNIOR	ZRC	98	2500	336.6	336.6	31.8
TPS6591104A2ZRCR	BGA MICROSTAR JUNIOR	ZRC	98	2500	336.6	336.6	31.8
TPS6591104EA2ZRCR	BGA MICROSTAR JUNIOR	ZRC	98	2500	336.6	336.6	31.8
TPS6591106A2ZRCR	BGA MICROSTAR JUNIOR	ZRC	98	2500	336.6	336.6	31.8
TPS6591109A2ZRCR	BGA MICROSTAR JUNIOR	ZRC	98	2500	336.6	336.6	31.8
TPS659110A2ZRCR	BGA MICROSTAR JUNIOR	ZRC	98	2500	336.6	336.6	31.8
TPS659112A2ZRCR	BGA MICROSTAR JUNIOR	ZRC	98	2500	336.6	336.6	31.8
TPS6591133A2ZRCR	BGA MICROSTAR JUNIOR	ZRC	98	2500	336.6	336.6	31.8
TPS659113A2ZRCR	BGA MICROSTAR JUNIOR	ZRC	98	2500	336.6	336.6	31.8
TPS659114A2ZRCR	BGA MICROSTAR JUNIOR	ZRC	98	2500	336.6	336.6	31.8
TPS65911AA2ZRCR	BGA MICROSTAR JUNIOR	ZRC	98	2500	336.6	336.6	31.8
TPS65911AA2ZRCT	BGA MICROSTAR JUNIOR	ZRC	98	250	336.6	336.6	31.8

ZRC (S–PBGA–N98) PLASTIC BALL GRID ARRAY

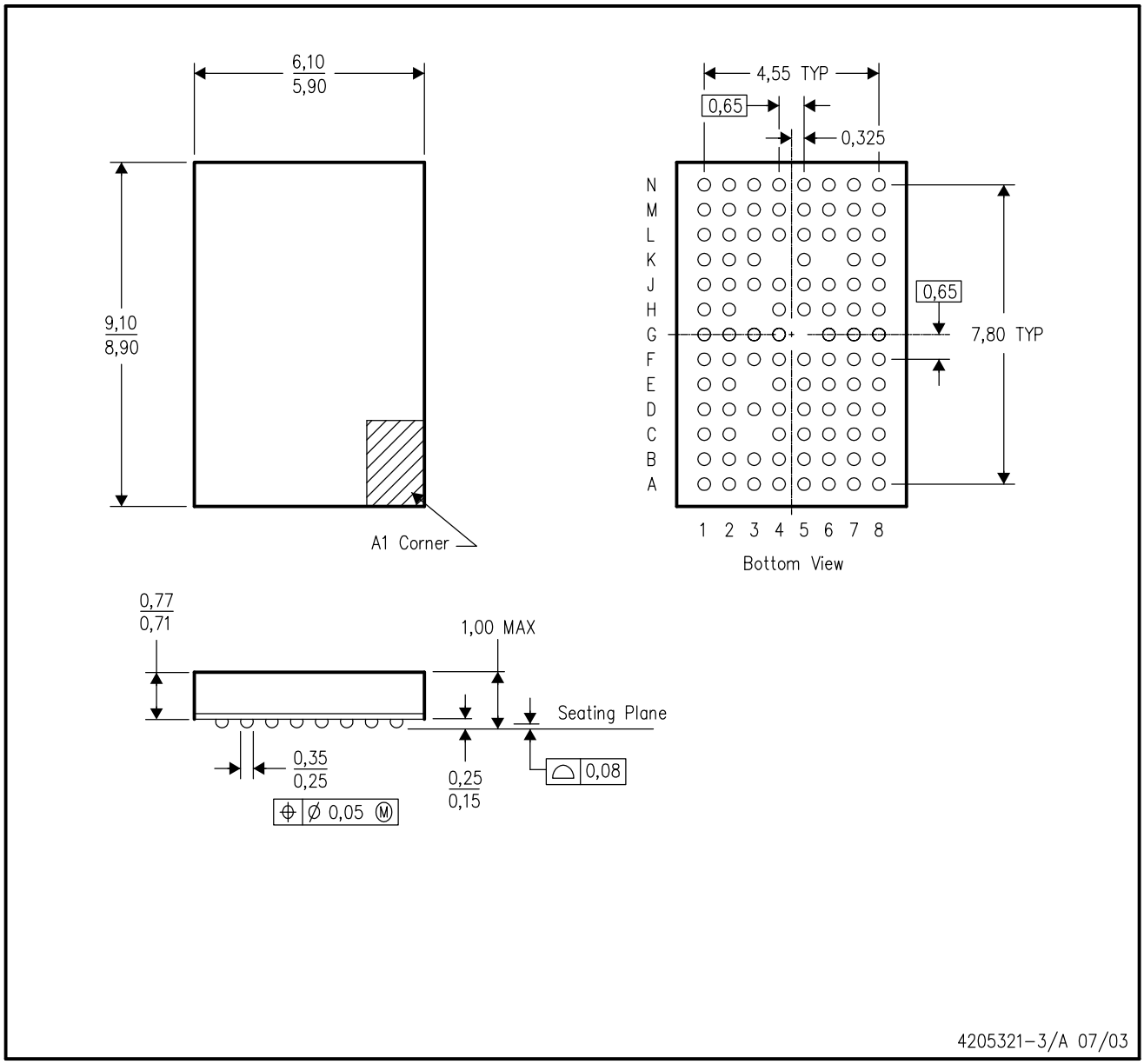

NOTES:
A. All linear dimensions are in millimeters.
B. This drawing is subject to change without notice.
C. MicroStar Junior™ BGA configuration
D. Falls within JEDEC MO–225
E. This package is lead–free.

MicroStar Junior BGA is a trademark of Texas Instruments.

IMPORTANT NOTICE AND DISCLAIMER

TI PROVIDES TECHNICAL AND RELIABILITY DATA (INCLUDING DATASHEETS), DESIGN RESOURCES (INCLUDING REFERENCE DESIGNS), APPLICATION OR OTHER DESIGN ADVICE, WEB TOOLS, SAFETY INFORMATION, AND OTHER RESOURCES “AS IS” AND WITH ALL FAULTS, AND DISCLAIMS ALL WARRANTIES, EXPRESS AND IMPLIED, INCLUDING WITHOUT LIMITATION ANY IMPLIED WARRANTIES OF MERCHANTABILITY, FITNESS FOR A PARTICULAR PURPOSE OR NON-INFRINGEMENT OF THIRD PARTY INTELLECTUAL PROPERTY RIGHTS.

These resources are intended for skilled developers designing with TI products. You are solely responsible for (1) selecting the appropriate TI products for your application, (2) designing, validating and testing your application, and (3) ensuring your application meets applicable standards, and any other safety, security, or other requirements. These resources are subject to change without notice. TI grants you permission to use these resources only for development of an application that uses the TI products described in the resource. Other reproduction and display of these resources is prohibited. No license is granted to any other TI intellectual property right or to any third party intellectual property right. TI disclaims responsibility for, and you will fully indemnify TI and its representatives against, any claims, damages, costs, losses, and liabilities arising out of your use of these resources.

TI’s products are provided subject to TI’s Terms of Sale (www.ti.com/legal/termsofsale.html) or other applicable terms available either on ti.com or provided in conjunction with such TI products. TI’s provision of these resources does not expand or otherwise alter TI’s applicable warranties or warranty disclaimers for TI products.

Mailing Address: Texas Instruments, Post Office Box 655303, Dallas, Texas 75265
Copyright © 2020, Texas Instruments Incorporated