molex
one company › a world of innovation

This document was generated on 05/20/2010

# PLEASE CHECK WWW.MOLEX.COM FOR LATEST PART INFORMATION

**Part Number:** 0791081010

**Status:** Active

**Overview:** milligrid

**Description:** 2.00mm (.079") Pitch Milli-Grid™ Flex-to-Board Vertical Receptacle Dual Row Through-Hole, 0.38µm (15µ") Gold (Au) Selective Plating, 22 Circuits, Leadfree

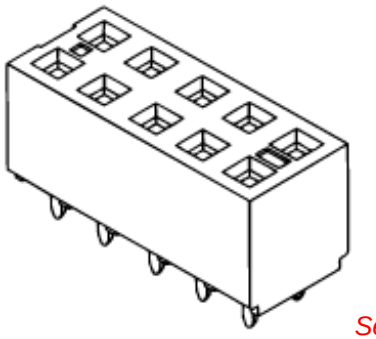

Series
image - Reference only

**Documents:**

3D Model
Drawing (PDF)
Product Specification PS-79107 (PDF)
RoHS Certificate of Compliance (PDF)

## Agency Certification

| | |
|---|---|
| CSA | LR19980 |
| UL | E29179 |

## General

| | |
|---|---|
| Product Family | FFC/FPC Connectors |
| Series | 79108 |
| Overview | milligrid |
| Product Name | Milli-Grid™ |

## Physical

| | |
|---|---|
| Circuits (Loaded) | 22 |
| Color - Resin | Black |
| Contact Position | Top |
| Durability (mating cycles max) | 50 |
| Entry Angle | 90° Angle |
| Flammability | 94V-0 |
| Material - Metal | Phosphor Bronze |
| Material - Plating Mating | Gold |
| Material - Plating Termination | Tin |
| Material - Resin | High Temperature Thermoplastic |
| Number of Rows | 2 |
| Orientation | Right Angle |
| PC Tail Length (in) | 0.050 In |
| PC Tail Length (mm) | 1.27 mm |
| PCB Locator | No |
| PCB Retention | None |
| PCB Thickness Recommended (in) | 0.024 In |
| PCB Thickness Recommended (mm) | 0.60 mm |
| Packaging Type | Tube |
| Pitch - Mating Interface (in) | 0.079 In |
| Pitch - Mating Interface (mm) | 2.00 mm |
| Plating min: Mating (µin) | 15 |
| Plating min: Mating (µm) | 0.375 |
| Plating min: Termination (µin) | 75 |
| Plating min: Termination (µm) | 1.875 |
| Polarized to PCB | No |
| Stackable | No |
| Surface Mount Compatible (SMC) | No |
| Temperature Range - Operating | -55°C to +105°C |
| Termination Interface: Style | Through Hole |
| Wire/Cable Type | FFC/FPC |

## Electrical

| | |
|---|---|
| Current - Maximum per Contact | 1A |
| Voltage - Maximum | 125V |

**EU RoHS**
ELV and RoHS Compliant

**China RoHS**

**REACH SVHC**
Not Reviewed

**Halogen-Free Status**
Not Reviewed

**Need more information on product environmental compliance?**

Email productcompliance@molex.com
For a multiple part number RoHS Certificate of Compliance, click here

Please visit the Contact Us section for any non-product compliance questions.

**Search Parts in this Series**
79108Series

**Mates With**
87833 , 87832 , 87831 , 87758 , 87759 , 87760

## Solder Process Data

| | |
|---|---|
| Lead-free Process Capability | Wave Capable (TH only) |

## Material Info

## Reference - Drawing Numbers

| | |
|---|---|
| Product Specification | PS-79107 |
| Sales Drawing | SDA-79108-**** |

This document was generated on 05/20/2010

**PLEASE CHECK WWW.MOLEX.COM FOR LATEST PART INFORMATION**

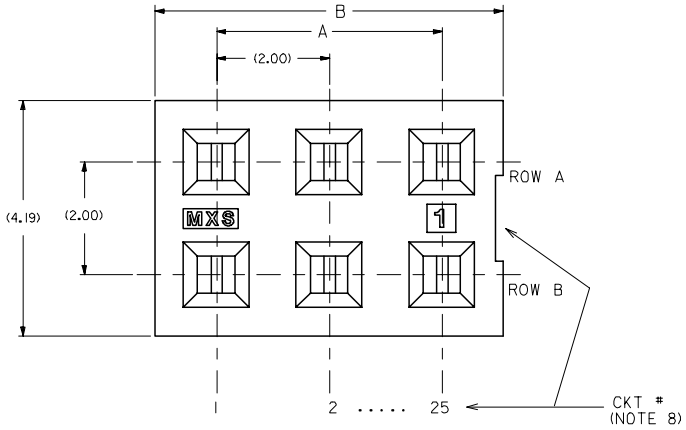


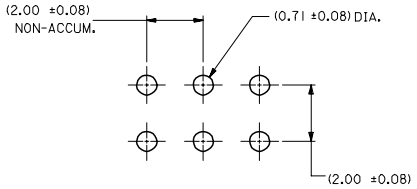


RECOMMENDED P.C. BOARD HOLE LAYOUT

SCALE - 10:1

## NOTES:

1 - HOUSING MATERIAL: GLASS FILLED LCP, COLOR: BLACK.
2 - TERMINAL MATERIAL: PHOSPHOR BRONZE
3 - SEE SHEET 2 FOR CIRCUIT SIZE, PART NUMBERS AND OVER-ALL DIMENSIONS.
4 - FOR ILLUSTRATION, 6 CIRCUIT ASSEMBLY SHOWN.
5 - REFER TO PRODUCT SPECIFICATION PS-79107.
6 - PACKAGING PER PK-70873-0180.
7 - SEE SHEET 3 FOR VOIDED ASSEMBLIES.
8 - CKTS. NUMBERED FROM LEFT TO RIGHT WHEN PART IS VIEWED FROM TOP WITH RECESS ON RIGHT AS SHOWN.

## PLATING OPTION :

(4) 0.76μm MIN. GOLD PLATE IN SELECTED AREA AND 1.91μm MIN. TIN IN SELECTED AREA OVER 1.27μm MIN. NICKEL OVER-ALL

(5) 0.38μm MIN. GOLD PLATE IN SELECTED AREA AND 1.91μm MIN. TIN IN SELECTED AREA OVER 1.27μm MIN. NICKEL OVER-ALL

(6) 0.13μm MIN. GOLD PLATE IN SELECTED AREA AND 1.91μm MIN. TIN IN SELECTED AREA OVER 1.27μm MIN. NICKEL OVER-ALL

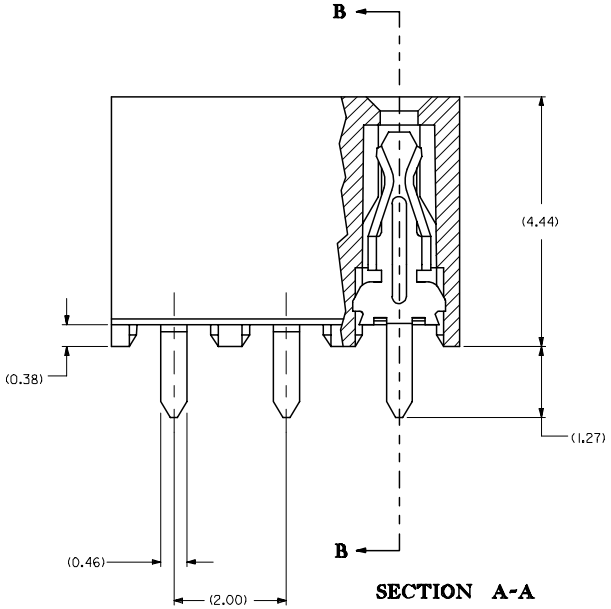


SECTION A-A

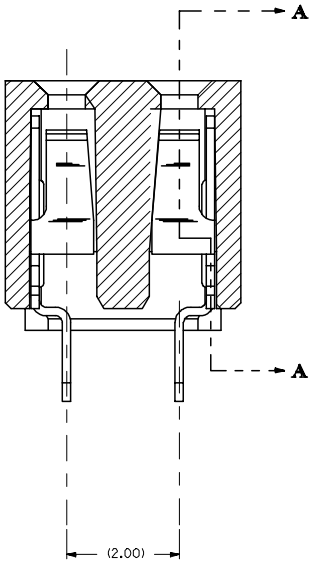


SECTION B-B

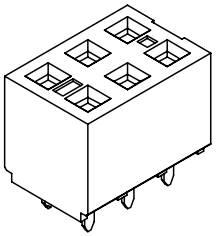

| REVISE PDR#S1436 | | | |
|---|---|---|---|
| EC NO: S2007-0532 | DRWN:KFLIM | CHKD:MLONG | APPR:SKTOH |
| 2006/12/06 | 2006/12/07 | 2006/12/07 | |
| REV | DESCRIPTION | | |
| E2 | | | |

QUALITY SYMBOLS
▼=0
▽C=0

GENERAL TOLERANCES (UNLESS SPECIFIED)

| | mm | INCH |
|---|---|---|
| 4 PLACES | ± --- | ± --- |
| 3 PLACES | ± 0.10 | ± --- |
| 2 PLACES | ± 0.15 | ± --- |
| 1 PLACE | ± --- | ± --- |
| ANGULAR ±1/2° | | |

DRAFT WHERE APPLICABLE MUST REMAIN WITHIN DIMENSIONS

| DIMENSION STYLE | SCALE | DESIGN UNITS | |
|---|---|---|---|
| MM ONLY | NTS | METRIC | THIRD ANGLE PROJECTION |

| DRAWN BY | DATE |
|---|---|
| AAB | 1998/05/15 |
| CHECKED BY | DATE |
| MJM | 1998/05/15 |
| APPROVED BY | DATE |
| WAZ | 1998/05/15 |

TITLE: 2MM DUAL ROW, FFC VERTICAL RECEPTACLE

molex MOLEX INCORPORATED

MATERIAL NO.: SEE TABLE

DOCUMENT NO.: SDA-79108-****

SHEET NO.: 1 OF 4

SIZE: A3

THIS DRAWING CONTAINS INFORMATION THAT IS PROPRIETARY TO MOLEX INCORPORATED AND SHOULD NOT BE USED WITHOUT WRITTEN PERMISSION

| CKT. SIZE | DIM. "A" | DIM. "B" | PLATING OPTION 5 | | PLATING OPTION 4 | | PLATING OPTION 6 | |
|---|---|---|---|---|---|---|---|---|
| | | | EDP NO. | ENG. NO. | EDP NO. | ENG. NO. | EDP NO. | ENG. NO. |
| 04 | (2.00) | (4.19) | 791081001 | 79108-1001 | 791081051 | 79108-1051 | NOT TOOLED | 79108-1101 |
| 06 | (4.00) | (6.19) | 791081002 | 79108-1002 | 791081052 | 79108-1052 | | 79108-1102 |
| 08 | (6.00) | (8.19) | 791081003 | 79108-1003 | 791081053 | 79108-1053 | | 79108-1103 |
| 10 | (8.00) | (10.19) | 791081004 | 79108-1004 | 791081054 | 79108-1054 | | 79108-1104 |
| 12 | (10.00) | (12.19) | 791081005 | 79108-1005 | 791081055 | 79108-1055 | | 79108-1105 |
| 14 | (12.00) | (14.19) | 791081006 | 79108-1006 | 791081056 | 79108-1056 | | 79108-1106 |
| 16 | (14.00) | (16.19) | 791081007 | 79108-1007 | 791081057 | 79108-1057 | | 79108-1107 |
| 18 | (16.00) | (18.19) | 791081008 | 79108-1008 | 791081058 | 79108-1058 | | 79108-1108 |
| 20 | (18.00) | (20.19) | 791081009 | 79108-1009 | 791081059 | 79108-1059 | | 79108-1109 |
| 22 | (20.00) | (22.19) | 791081010 | 79108-1010 | 791081060 | 79108-1060 | | 79108-1110 |
| 24 | (22.00) | (24.19) | 791081011 | 79108-1011 | 791081061 | 79108-1061 | | 79108-1111 |
| 26 | (24.00) | (26.19) | 791081012 | 79108-1012 | 791081062 | 79108-1062 | | 79108-1112 |
| 28 | (26.00) | (28.19) | 791081013 | 79108-1013 | 791081063 | 79108-1063 | | 79108-1113 |
| 30 | (28.00) | (30.19) | 791081014 | 79108-1014 | 791081064 | 79108-1064 | | 79108-1114 |
| 32 | (30.00) | (32.19) | 791081015 | 79108-1015 | 791081065 | 79108-1065 | | 79108-1115 |
| 34 | (32.00) | (34.19) | 791081016 | 79108-1016 | 791081066 | 79108-1066 | | 79108-1116 |
| 36 | (34.00) | (36.19) | 791081017 | 79108-1017 | 791081067 | 79108-1067 | | 79108-1117 |
| 38 | (36.00) | (38.19) | 791081018 | 79108-1018 | 791081068 | 79108-1068 | | 79108-1118 |
| 40 | (38.00) | (40.19) | 791081019 | 79108-1019 | 791081069 | 79108-1069 | | 79108-1119 |
| 42 | (40.00) | (42.19) | 791081020 | 79108-1020 | 791081070 | 79108-1070 | | 79108-1120 |
| 44 | (42.00) | (44.19) | 791081021 | 79108-1021 | 791081071 | 79108-1071 | | 79108-1121 |
| 46 | (44.00) | (46.19) | 791081022 | 79108-1022 | 791081072 | 79108-1072 | | 79108-1122 |
| 48 | (46.00) | (48.19) | 791081023 | 79108-1023 | 791081073 | 79108-1073 | | 79108-1123 |
| 50 | (48.00) | (50.19) | 791081024 | 79108-1024 | 791081074 | 79108-1074 | | 79108-1124 |

REVISE PDR#S1436 2006/12/06
EC NO: S2007-0532 2006/12/07
DRWN:KFLIM 2006/12/07
CHKD:MLONG
APPR:SKTOH
DESCRIPTION
REV E2

QUALITY SYMBOLS
▼=0
▽=0

GENERAL TOLERANCES (UNLESS SPECIFIED)

| | mm | INCH |
|---|---|---|
| 4 PLACES | ± --- | ± --- |
| 3 PLACES | ± 0.10 | ± --- |
| 2 PLACES | ± 0.15 | ± --- |
| 1 PLACE | ± --- | ± --- |
| ANGULAR ±1/2° | | |

DRAFT WHERE APPLICABLE MUST REMAIN WITHIN DIMENSIONS

DIMENSION STYLE: MM ONLY
SCALE: NTS
DESIGN UNITS: METRIC
THIRD ANGLE PROJECTION

DRAWN BY: AAB DATE: 1998/05/15
CHECKED BY: MJM DATE: 1998/05/15
APPROVED BY: WAZ DATE: 1998/05/15

TITLE: 2MM DUAL ROW, FFC VERTICAL RECEPTACLE

molex MOLEX INCORPORATED

MATERIAL NO.: SEE TABLE
DOCUMENT NO.: SDA-79108-****
SHEET NO.: 2 OF 4
SIZE: A3

THIS DRAWING CONTAINS INFORMATION THAT IS PROPRIETARY TO MOLEX INCORPORATED AND SHOULD NOT BE USED WITHOUT WRITTEN PERMISSION

# MOLDED VOID OPTION

| CKT. SIZE | ASSEMBLY EDP NO. | ASSEMBLY ENG. NO. | VOID LOCATION(S) SEE SHEET 1 FOR CONVENTION ROW | VOID LOCATION(S) SEE SHEET 1 FOR CONVENTION CKT. NO.(s) | PLATING OPTION | DIM. "A" | DIM. "B" |
|---|---|---|---|---|---|---|---|
| 44 | 791085003 | 79108-5003 | ROW A | 13 | 4 | (42.00) | (44.19) |
| 44 | 791085004 | 79108-5004 | ROW B | 10 | 4 | (42.00) | (44.19) |

NOTES:

1. TERMINALS WILL BE PRESENT IN VOIDED LOCATIONS HOWEVER, PIN WINDOWS WILL BE CLOSED.
2. VOIDS CAN ONLY BE PRESENT IN ONE ROW OF THE CONNECTOR.

REVISE PDR#S1436 2006/12/06
EC NO: S2007-0532 2006/12/07
DRWN:KFLIM 2006/12/07
CHKD:MLONG
APPR:SKTOH
DESCRIPTION
REV E2

QUALITY SYMBOLS
▼=0
▽=0

GENERAL TOLERANCES (UNLESS SPECIFIED)

| | mm | INCH |
|---|---|---|
| 4 PLACES | ± --- | ± --- |
| 3 PLACES | ± 0.10 | ± --- |
| 2 PLACES | ± 0.15 | ± --- |
| 1 PLACE | ± --- | ± --- |
| ANGULAR ±1/2° | | |

DRAFT WHERE APPLICABLE MUST REMAIN WITHIN DIMENSIONS

DIMENSION STYLE: MM ONLY
SCALE: NTS
DESIGN UNITS: METRIC
THIRD ANGLE PROJECTION

DRAWN BY: AAB DATE: 1998/05/15
CHECKED BY: MJM DATE: 1998/05/15
APPROVED BY: WAZ DATE: 1998/05/15
MATERIAL NO.: SEE TABLE

TITLE: 2MM DUAL ROW, FFC VERTICAL RECEPTACLE

molex MOLEX INCORPORATED

DOCUMENT NO.: SDA-79108-****
SHEET NO.: 3 OF 4
SIZE: A3

THIS DRAWING CONTAINS INFORMATION THAT IS PROPRIETARY TO MOLEX INCORPORATED AND SHOULD NOT BE USED WITHOUT WRITTEN PERMISSION

| ASSEMBLY P/N PACKED IN T&R | CKT SIZE | PLATING OPTION | DIM A | DIM B | (F) | (Bo) | (W) |
|---|---|---|---|---|---|---|---|
| 79108-6001 | 16 | 5 | 14.00 | 16.19 | 11.50 | 16.60 | 24.00 |

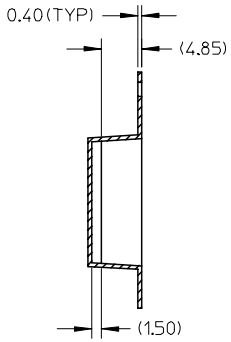


SECTION A-A

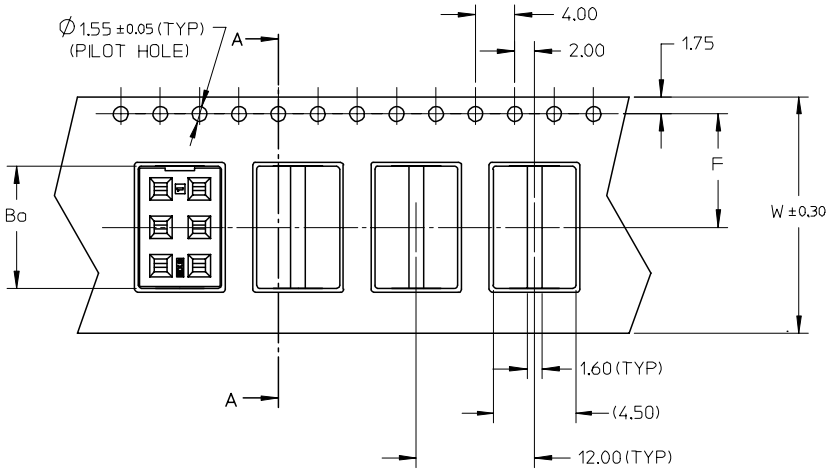


NOTES:

1. LEADER AND TRAILER TAPE

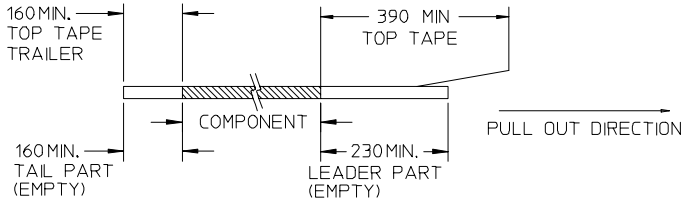


2. PEELING OFF FORCE OF THE TOP TAPE: 20-80gf.
   (PEELING DIRECTION AS SHOWN IN FOLLOWING FIGURE)

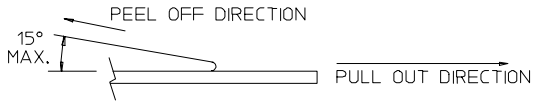


3. PACKAGING STANDARD IS AS PER EIA-481.
4. THE TAPE IS TREATED FOR ANTI-STATIC.
5. MATERIAL: CLEAR POLYSTYRENE.
6. TAPE & REEL QUANTITY = 800 PCS/REEL

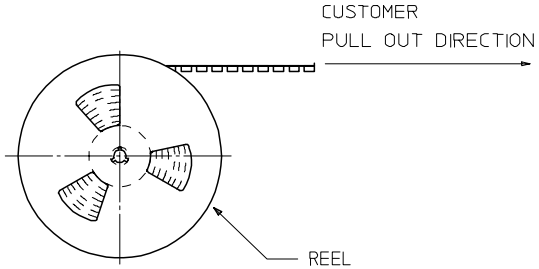


TAPE AND REEL ORIENTATION

REVISE PDR#S1436
EC NO: S2007-0532
DRWN:KFLIM 2006/12/06
CHKD:MLONG 2006/12/07
APPR:SKTOH 2006/12/07
DESCRIPTION
REV E2

QUALITY SYMBOLS
▼=0
(C)=0

GENERAL TOLERANCES (UNLESS SPECIFIED)

| | mm | INCH |
|---|---|---|
| 4 PLACES | ± --- | ± --- |
| 3 PLACES | ± 0.10 | ± --- |
| 2 PLACES | ± 0.15 | ± --- |
| 1 PLACE | ± --- | ± --- |
| ANGULAR ±1/2° | | |

DRAFT WHERE APPLICABLE MUST REMAIN WITHIN DIMENSIONS

DIMENSION STYLE: MM ONLY
SCALE: NTS
DESIGN UNITS: METRIC
THIRD ANGLE PROJECTION

| | | DATE |
|---|---|---|
| DRAWN BY | AAB | 1998/05/15 |
| CHECKED BY | MJM | 1998/05/15 |
| APPROVED BY | WAZ | 1998/05/15 |

TITLE: 2MM DUAL ROW, FFC VERTICAL RECEPTACLE

molex MOLEX INCORPORATED

MATERIAL NO.: SEE TABLE
DOCUMENT NO.: SDA-79108-****
SHEET NO.: 4 OF 4
SIZE: A3

THIS DRAWING CONTAINS INFORMATION THAT IS PROPRIETARY TO MOLEX INCORPORATED AND SHOULD NOT BE USED WITHOUT WRITTEN PERMISSION