# RemoteTRAK® I/O Modules

*Sixnet Automation Series*

## ▶▶▶ I/O Modules

### *PRODUCT HIGHLIGHTS*

- Single module compact solutions for small stations
- Lowest cost I/O solution for small remote stations
- Ideal solution for small “dumb” RTU applications
- Supports SIXNET radio packeting and phone links

### *PRODUCT HIGHLIGHTS*

- 4 discrete inputs
- Nominal discrete input range 12/24 VDC
- Discrete input characteristics same as RM-8DI2
- Number of analog inputs 4 (-4AI2 module only)
- Analog input range 4-20 mA
- Analog input resolution 16 bits
- Analog input characteristics Same as RM-8AI2
- Number of discrete outputs 4 (-4DO2 module only)
- Max. output current per channel 1 Amp
- Discrete output characteristics Same as RM-16DO2
- Filtered Mode ON/OFF delay 25 mS
- Filtered Mode count feature 10 Hz Maximum
- Fast Mode count feature 100 Hz Max (2 kHz on channel 1)
- Serial communication information See page 19

### *ENVIRONMENTAL*

- RS485 isolation 1200 Volts RMS 1 minute
- Required supply voltage 10-30 VDC (0.5 watt typical)
- Operating temperature range -30 to 70° C
- Storage temperature range -40 to 85° C
- Humidity (non-condensing) 5 to 95%
- Flammability (module plastic) UL 94V-0 materials
- Electrical safety UL 508, CSA C22.2/14; EN61010-1 (IEC1010), CE
- EMI emissions FCC part 15, ICES-003, Class A; EN55022, CE
- EMC immunity EN50082-1 (IEC801-2, 3, 4) CE
- Vibration IEC68-2-6
- Hazardous locations UL 1604, CSA C22.2/213-M1987, (Class I, Div 2, Groups A, B, C, D), EN50021 (zone 2)
- Marine/offshore tested and/or verified to meet various marine and maritime standards

All specifications are subject to change. Consult factory for latest info.

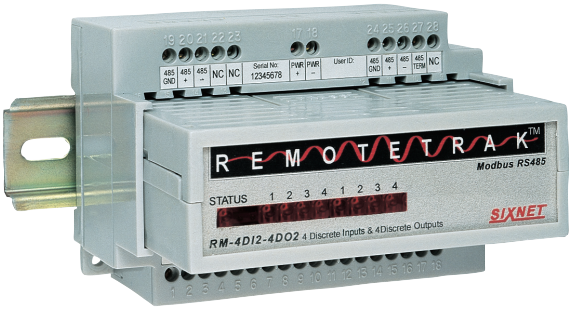


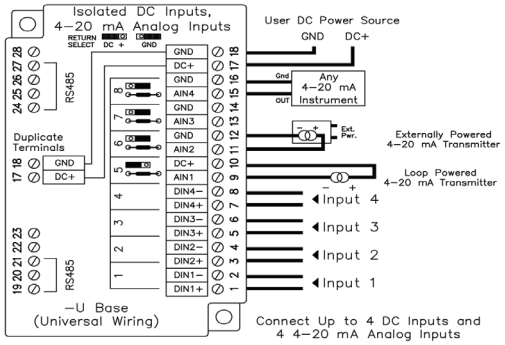


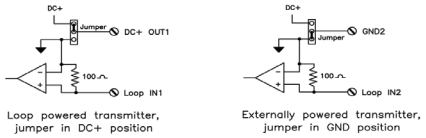


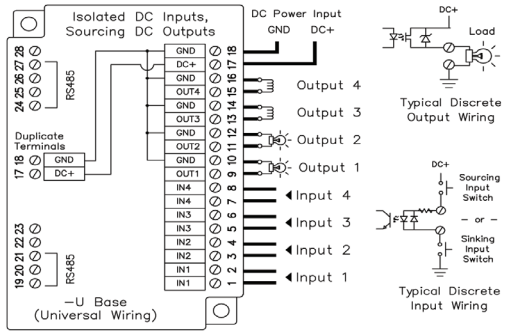


### *ORDERING INFORMATION*

RM-4DI2-4AI2 - 4DI and 4AI with universal base
RM-4DI2-4DO2 - 4DI and 4DO with universal base
RM-4DI2-4AI2 - Replacement module only
RM-4DI2-4DO2 - Replacement module only


www.redlion.net

*Connect. Monitor. Control.*

**Americas**
sales@redlion.net

**Asia-Pacific**
asia@redlion.net

**Europe**
**Middle East**
**Africa**
europe@redlion.net

**+1 (717) 767-6511**


As the global experts in communication, monitoring and control for industrial automation and networking, Red Lion has been delivering innovative solutions for over forty years. Our award-winning technology enables companies worldwide to gain real-time data visibility that drives productivity. Product brands include Red Lion, N-Tron and Sixnet. With headquarters in York, Pennsylvania, the company has offices across the Americas, Asia-Pacific and Europe. For more information, please visit www.redlion.net. Red Lion is a Spectris company.

ADLD0366 090913 ©2013 Red Lion Controls