ZMM5225 thru ZMM5267

Zener Diodes

Zener Voltage Range: 3.0 to 75 Volts Power Dissipation: 500mW

Features

- ◆ Silicon Planar Power Zener Diodes.
- ◆ Standard Zener voltage tolerance is ±5% with a “B” suffix, and ±10% with a “A” suffix . Other tolerances are available upon request.
- ◆ These diodes are also available in DO-35 case with the type designation 1N5221 ... 1N5281.

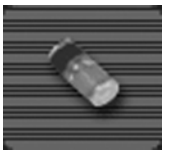

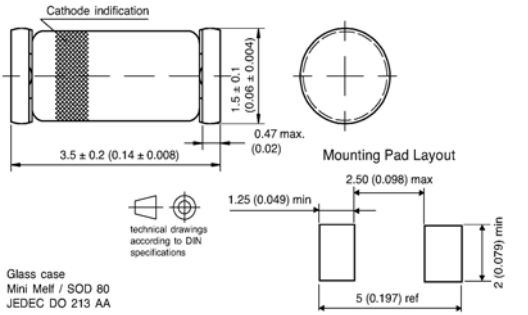

Mechanical Data

- ◆ Case: MiniMELF Glass Case (SOD-80)
- ◆ Weight: approx. 0.05g

Maximum Ratings and Thermal Characteristics

(T_A=25°C unless otherwise noted)

Parameter	Symbol	Value	Unit
Zener current (see Table "Characteristics")			
Power dissipation at T_{amb}=75°C	P_{tot}	500 (1)	mW
Thermal resistance junction to ambient air	$R_{\theta JA}$	300 (1)	°C/W
Maximum junction temperature	T_j	175	°C
Storage temperature range	T_S	-65 to +175	°C

Notes: 1. Valid provided that electrodes are kept at ambient temperature.

Electrical Characteristics

(T_A=25°C unless otherwise noted) **Maximum V_F=1.25V at I_F=200mA**

Type number	Nominal zener voltage (3) at I_{ZT} V_Z (Volts)	Test current I_{ZT} (mA)	Maximum zener impedance (2) at I_{ZT} Z_{ZT} (Ω)	Maximum zener impedance (2) at I_{ZT}=0.25mA Z_{ZK} (Ω)	Typical temperature coefficient αvz (% / °C)	Maximum regulator current (2) I_{ZM} (mA)	Maximum reverse leakage current I_R (uA)	Maximum reverse leakage current Test voltage V_R (Volts)
ZMM5225	3.0	20	29	1600	-0.075	152	50	1.0
ZMM5226	3.3	20	28	1600	-0.070	138	25	1.0
ZMM5227	3.6	20	24	1700	-0.065	126	15	1.0
ZMM5228	3.9	20	23	1900	-0.060	115	10	1.0
ZMM5229	4.3	20	22	2000	-0.055	106	5.0	1.0
ZMM5230	4.7	20	19	1900	-0.030	97	5.0	2.0
ZMM5231	5.1	20	17	1600	-0.030	89	5.0	2.0
ZMM5232	5.6	20	11	1600	+0.038	81	5.0	3.0
ZMM5233	6.0	20	7	1600	+0.038	76	5.0	3.5
ZMM5234	6.2	20	7	1000	+0.045	73	5.0	4.0
ZMM5235	6.8	20	5	750	+0.050	67	3.0	5.0
ZMM5236	7.5	20	6	500	+0.058	61	3.0	6.0
ZMM5237	8.2	20	8	500	+0.062	55	3.0	6.5
ZMM5238	8.7	20	8	600	+0.065	52	3.0	6.5
ZMM5239	9.1	20	10	600	+0.068	50	3.0	7.0
ZMM5240	10	20	17	600	+0.075	45	3.0	8.0
ZMM5241	11	20	22	600	+0.076	41	2.0	8.4
ZMM5242	12	20	30	600	+0.077	38	1.0	9.1
ZMM5243	13	9.5	13	600	+0.079	35	0.5	9.9
ZMM5244	14	9.0	15	600	+0.082	32	0.1	10
ZMM5245	15	8.5	16	600	+0.082	30	0.1	11
ZMM5246	16	7.8	17	600	+0.083	28	0.1	12
ZMM5247	17	7.4	19	600	+0.084	27	0.1	13
ZMM5248	18	7.0	21	600	+0.085	25	0.1	14
ZMM5249	19	6.6	23	600	+0.086	24	0.1	14
ZMM5250	20	6.2	25	600	+0.086	23	0.1	15
ZMM5251	22	5.6	29	600	+0.087	21	0.1	17
ZMM5252	24	5.2	33	600	+0.087	19.1	0.1	18
ZMM5253	25	5.0	35	600	+0.089	18.2	0.1	19
ZMM5254	27	4.6	41	600	+0.090	16.8	0.1	21
ZMM5255	28	4.5	44	600	+0.091	16.2	0.1	21
ZMM5256	30	4.2	49	600	+0.091	15.1	0.1	23
ZMM5257	33	3.8	58	700	+0.092	13.8	0.1	25
ZMM5258	36	3.4	70	700	+0.093	12.6	0.1	27
ZMM5259	39	3.2	80	800	+0.094	11.6	0.1	30
ZMM5260	43	3.0	93	900	+0.095	10.6	0.1	33
ZMM5261	47	2.7	105	1000	+0.095	9.7	0.1	36
ZMM5262	51	2.5	125	1100	+0.096	8.9	0.1	39
ZMM5263	56	2.2	150	1300	+0.096	-	0.1	43
ZMM5264	60	2.1	170	1400	+0.097	-	0.1	46
ZMM5265	62	2.0	185	1400	+0.097	-	0.1	47
ZMM5266	68	1.8	230	1600	+0.097	-	0.1	52
ZMM5267	75	1.7	270	1700	+0.098	-	0.1	56

Notes:
1. The Zener impedance is derived from the 1kHz AC voltage which results when an AC current having an RMS value equal to 10% of the Zener current (I_{ZT} or I_{ZK}) is superimposed on I_{ZT} or I_{ZK}. Zener impedance is measured at two points to insure a sharp knee on the breakdown curve and to eliminate unstable units
2. Valid provided that electrodes are kept at ambient temperature
3. Tested under thermal equilibrium and DC test conditions

RATINGS AND CHARACTERISTIC CURVES
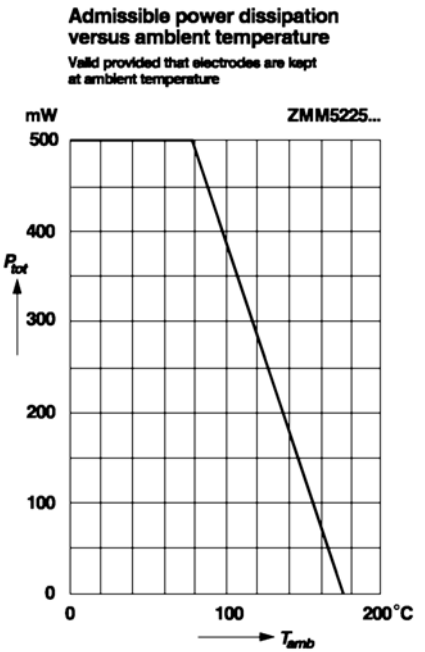
(T_A = 25°C unless otherwise noted)