SLDN-12D1Ax

Non-Isolated DC-DC Converter

The SLDN-12D1Ax power modules are non-isolated dc-dc converters that can deliver up to 12A of output current. These modules operate over a wide range of input voltage (V_{IN} = 3Vdc-14.4Vdc) and provide a precisely regulated output voltage from 0.45Vdc to 5.5Vdc, programmable via an external resistor and PMBus control.

Features include a digital interface using the PMBus protocol, remote On/Off, adjustable output voltage, over current and overtemperature protection. The PMBus interface supports a range of commands to both control and monitor the module.

The module also includes the Tunable Loop™ feature that allows the user to optimize the dynamic response of the converter to match the load with reduced amount of output capacitance leading to savings on cost and PWB area.

Key Features & Benefits

- 3-14.4 VDC Input / 0.45-5.5 VDC @ 12 A Output
- Wide Input Voltage Range
- Fixed Switching Frequency
- Power Good Signal
- Remote On/Off
- Digital interface through the PMBus™ protocol
- Ability to Sink and Source Current
- Cost Efficient Open Frame Design
- Over Temperature Protection
- Tunable Loop™ (a registered trademark of Lineage Power Systems) to Optimize Dynamic output voltage response
- Flexible output voltage sequencing EZ-SEQUENCE
- Output overcurrent protection (non-latching)
- Wide operating temperature range [-40°C to 85°C]
- Class 2, Category 2, Non-Isolated DC/DC Converter (refer to IPC-9592A)
- Compliant to RoHS EU Directive 2002/95/EC
- Compatible in a Pb-free or SnPb reflow environment
- Certificated to UL60950-1/CSA C22.2 No.60950-1, 2rd

RoHS Compliant

Applications

- Distributed power architectures
- Intermediate bus voltage applications
- Telecommunications equipment
- Servers and storage applications
- Networking equipment
- Industrial equipmen

1. MODEL SELECTION

MODEL NUMBER	OUTPUT VOLTAGE	INPUT VOLTAGE	MAX. OUTPUT CURRENT	MAX. OUTPUT POWER	TYPICAL EFFICIENCY
SLDN-12D1A0	0.45-5.5 VDC	3-14.4 VDC	12 A	60 W	95.4%
SLDN-12D1AL	0.45-5.5 VDC	3-14.4 VDC	12 A	60 W	95.4%

NOTE: 1. Add "R" suffix at the end of the model number to indicate tape and reel packaging (Standard).
2. Add "G" suffix at the end of the model number to indicate tray packaging (Option).

PART NUMBER EXPLANATION

S	LDN	-	12	D	1A	x	Y
Mounting Type	RoHS Status		Output Current	Wide input voltage range	Output Voltage	Enable	Package Type
Surface mount	Series code		12 A	3-14.4 V	With sequencing	L – active Low 0 –active High	G – Tray package R –tape and reel packaging

2. ABSOLUTE MAXIMUM RATINGS

PARAMETER	DESCRIPTION	MIN	TYP	MAX	UNITS
Continuous non-operating Input Voltage		-0.3	-	15	V
Voltage on SEQ SYNC VS+		-	-	7	V
Voltage on CLK DATA SMBALERT terminal		-	-	3.6	V
Ambient temperature	See Thermal Considerations section	-40	-	85	°C
Storage Temperature		-55	-	125	°C
Altitude		-	-	2000	m

NOTE: Stresses in excess of the absolute maximum ratings can cause permanent damage to the device. These are absolute stress ratings only, functional operation of the device is not implied at these or any other conditions in excess of those given in the operations sections of the data sheet. Exposure to absolute maximum ratings for extended periods can adversely affect the device reliability.

3. INPUT SPECIFICATIONS

All specifications are typical at 25°C unless otherwise stated.

PARAMETER		DESCRIPTION	MIN	TYP	MAX	UNIT
Operating Input Voltage			3	-	14.4	V
Input Current (full load)		VIN=3V to 14.4V	-	-	9	A
Input Current (no load)	Vo=0.6V Vo=5V	VIN = 12Vdc, IO = 0, module enabled	- -	52 85	- -	mA mA
Input Stand-by Current		V_{IN} = 12.0Vdc, module disabled	-	6.5	-	mA
Input Reflected Ripple Current (pk-pk)		1. 5Hz to 20MHz, 1µH source impedance; VIN =0 to 14V, IO= IOmax 2. See Test Configurations	-	400	-	mA
I^2t Inrush Current Transient			-	-	1	A2s
Input Ripple Rejection (120Hz)			-	-55	-	dB

CAUTION: This converter is not internally fused. An input line fuse must be used in application.

This power module can be used in a wide variety of applications, ranging from simple standalone operation to an integrated part of sophisticated power architecture. To preserve maximum flexibility, internal fusing is not included; however, to achieve maximum safety and system protection, always use an input line fuse. The safety agencies require a fast-acting fuse with a maximum rating of 6A. Based on the information provided in this data sheet on inrush energy and maximum dc input current, the same type of fuse with a lower rating can be used. Refer to the fuse manufacturer's data sheet for further information.

Note: Unless otherwise indicated, specifications apply over all operating input voltage, resistive load, and temperature conditions.

4. OUTPUT SPECIFICATIONS

All specifications are typical at nominal input, full load at 25°C unless otherwise stated.

PARAMETER		DESCRIPTION	MIN	TYP	MAX	UNIT
Output Voltage Set Point		with 0.1% tolerance for external resistor used to set output voltage	-1.0	-	1.0	%Vo,set
Output Voltage		Over all operating input voltage, resistive load, and temperature conditions until end of life	-0.3	-	0.3	%Vo,set
PMBus Adjustable Output Voltage Range			-25	0	25	%Vo,set
PMBus Output Voltage Adjustment Step Size			-	0.4	-	%Vo,set
Adjustment Range		Some output voltages may not be possible depending on the input voltage – see Feature Descriptions Section	0.6	-	5.5	V
Remote Sense Range			-	-	0.5	V
Load Regulation	$V_O \geq 2.5V$ $V_O < 2.5V$	$I_O=I_{O, min}$ to $I_{O, max}$	- -	- -	10 10	mV mV
Line Regulation	$V_O \geq 2.5V$ $V_O < 2.5V$	$V_{IN}=V_{IN, min}$ to $V_{IN, max}$	- -	- -	0.4 5	%Vo,set mV
Temperature Regulation		$T_{ref}=T_{A, min}$ to $T_{A, max}$	-	-	0.4	%Vo,set
Ripple and Noise(Pk-Pk) Ripple and Noise(RMS)		5Hz to 20MHz BW, VIN=VIN, nom and $I_O=I_{O, min}$ to $I_{O, max}$ Co = 0.1uF // 22 uF ceramic capacitors)	- -	50 20	100 38	mV mV
Output Current Range		in either sink or source mode	0	-	12	A
Output Current Limit Inception		Current limit does not operate in sink mode	-	130	-	%Io,max
Output Short-Circuit Current		Vo≤250mV, Hiccup Mode	-	0.92	-	A
Output Capacitance	ESR≥ 1 mΩ ESR≥0.15 mΩ ESR≥ 10 mΩ	Without the Tunable Loop™ With the Tunable Loop™ With the Tunable Loop™	22 22 22	- - -	47 1000 5000	uF uF uF
Turn-On Delay Times (VIN=VIN, nom, IO=IO, max , VO to within ±1% of steady state)		Case 1: On/Off input is enabled and then input power is applied(delay from instant at which VIN = VIN, min until Vo = 10% of Vo, set) Case 2: Input power is applied for at least one second and then the On/Off input is enabled (delay from instant at which Von/Off is enabled until Vo = 10% of Vo, set)	- -	1.1 700	- -	ms us
Output voltage Rise time		time for Vo to rise from 10% of Vo, set to 90% of Vo, set	-	3.1	-	ms

Notes: 1. Some output voltages may not be possible depending on the input voltage.
2. External capacitors may require using the new Tunable Loop™ feature to ensure that the module is stable as well as getting the best transient response (See the Tunable Loop™ section for details).
3. Unless otherwise indicated, specifications apply over all operating input voltage, resistive load, and temperature conditions.

© 2016 Bel Power Solutions & Protection

5. GENERAL SPECIFICATIONS

PARAMETER		DESCRIPTION	MIN	TYP	MAX	UNIT
Efficiency	Vo=0.6V Vo=1.2V Vo=1.8V Vo=2.5V Vo=3.3V Vo=5.0V	Vin= 12Vdc, Ta=25°C Io=Io, max , Vo= Vo,set	-	76.4 86.0 89.9 92.2 93.6 95.4	-	%
Switching Frequency			-	600	-	kHz
Synchronization Frequency Range			510	-	720	kHz
High-Level Input Voltage			2.0	-	-	V
Low-Level Input Voltage			-	-	0.4	V
Input Current, SYNC			-	-	100	nA
Minimum Pulse Width, SYNC			100	-	-	ns
Maximum SYNC rise time			100	-	-	ns
Over Temperature Protection			-	150	-	℃
PMBus Over Temperature Warning Threshold			-	130	-	℃
PMBus Adjustable Input Under Voltage Lockout Thresholds			2.5	-	14	V
Resolution of Adjustable Input Under Voltage Threshold			-	-	500	mV
Input Undervoltage Lockout Turn-on Threshold Turn-off Threshold Hysteresis			 - - -	 2.79 2.58 0.2	 - - -	 V V V
Tracking Accuracy Power-Up: 2V/ms Power-Down: 2V/ms		Vin, min to Vin, max; Io, min to Io, max, Vseq < Vo	 - -	 - -	 100 100	 mV mV
PGOOD (Power Good) Overvoltage threshold for PGOOD ON Overvoltage threshold for PGOOD OFF Undervoltage threshold for PGOOD ON Undervoltage threshold for PGOOD OFF Pulldown resistance of PGOOD pin Sink current capability into PGOOD pin		Signal Interface Open Drain, Vsupply ≤ 5Vdc	 - - - - - -	 108 110 92 90 - -	 - - - - 50 5	 %Vo,set %Vo,set %Vo,set %Vo,set Ω mA
Weight			-	2.23	-	g
MTBF		Calculated MTBF (IO=0.8IO, max, TA=40°C) Telecordia Issue 2 Method 1 Case 3		21,774,843		hours
Dimensions Inches (L × W × H) Millimeters (L × W × H)				 0.48 x 0.48 x 0.335 12.2 x 12.2 x 8.5		 Inches Millimeters

Note: Unless otherwise indicated, specifications apply over all operating input voltage, resistive load, and temperature conditions.

6. DIGITAL INTERFACE SPECIFICATIONS

PARAMETER	DESCRIPTION	MIN	TYP	MAX	UNIT
PMBus Signal Interface Characteristics					
Input High Voltage (CLK, DATA)		2.1	-	3.6	V
Input Low Voltage (CLK, DATA)		-	-	0.8	V
Input high level current (CLK, DATA)		-10	-	10	uA
Input low level current (CLK, DATA)		-10	-	10	uA
Output Low Voltage (CLK, DATA, SMBALERT#)	Iout =2mA	-	-	0.4	V
Output high level open drain leakage current (DATA, SMBALERT#)	Vout =3.6V	0	-	10	uA
Pin capacitance		-	0.7	-	pF
PMBus Operating frequency range		10	-	400	kHZ
Data setup time		250	-	-	ns
Data hold time	Receive Mode Transmit Mode	0 300	-	-	ns
Measurement System Characteristics					
Read delay time		153	192	231	us
Output current measurement range		0	-	18	A
Output current measurement resolution		62.5	-	-	mA
Output current measurement gain accuracy		-	-	±5	%
Output current measurement offset		-	-	0.1	A
V_{OUT} measurement range		0	-	5.5	V
V_{OUT} measurement resolution		-	15.625	-	mA
V_{OUT} measurement gain accuracy		-15	-	15	%
V_{OUT} measurement offset		-3	-	3	%
V_{IN} measurement range		3	-	14.4	V
V_{IN} measurement resolution		-	32.5	-	mV
V_{IN} measurement gain accuracy		-15	-	15	%
V_{IN} measurement offset		-5.5	-	1.4	LSB

© 2016 Bel Power Solutions & Protection

7. EFFICIENCY DATA

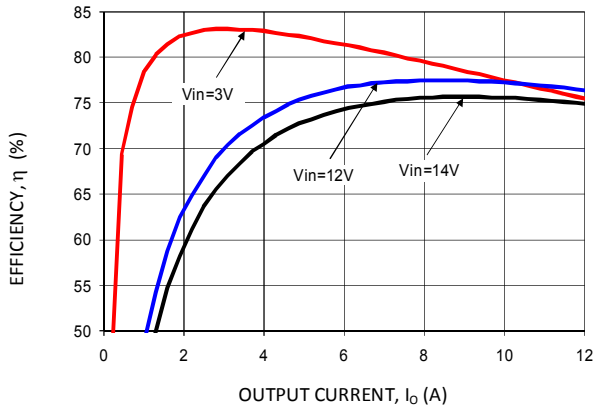

Vo=0.6V

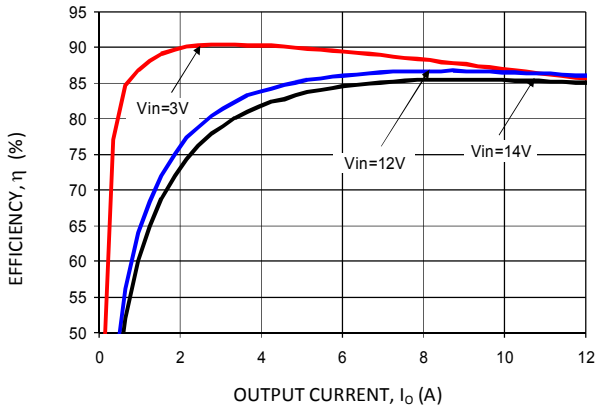

Vo=1.2V

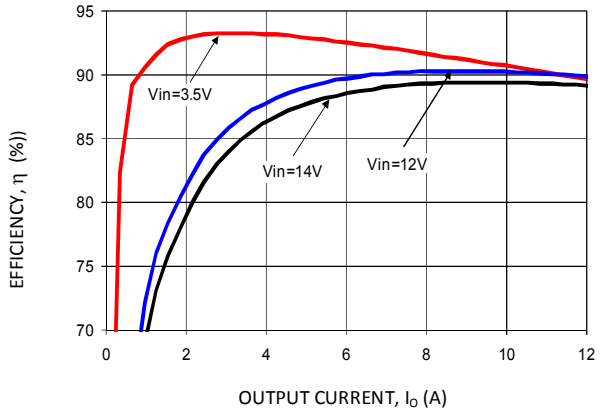

Vo=1.8V

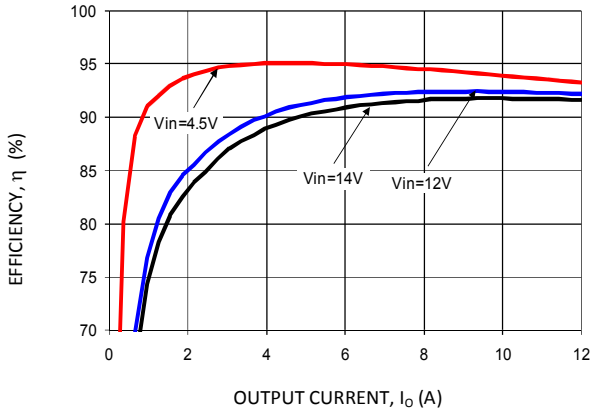

Vo=2.5V

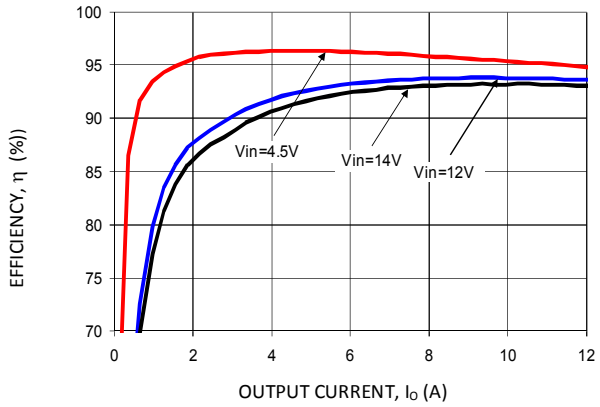

Vo=3.3V

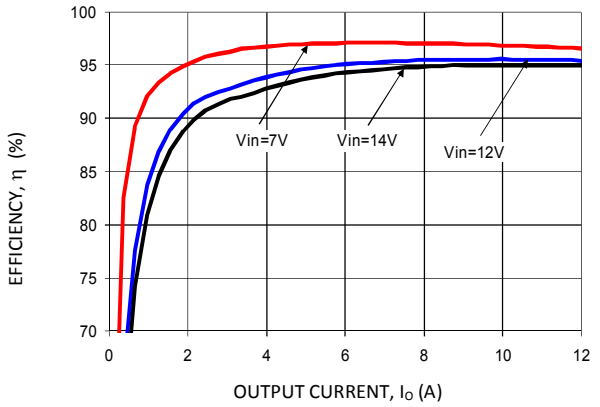

Vo=5.0V

8. THERMAL DERATING CURVE

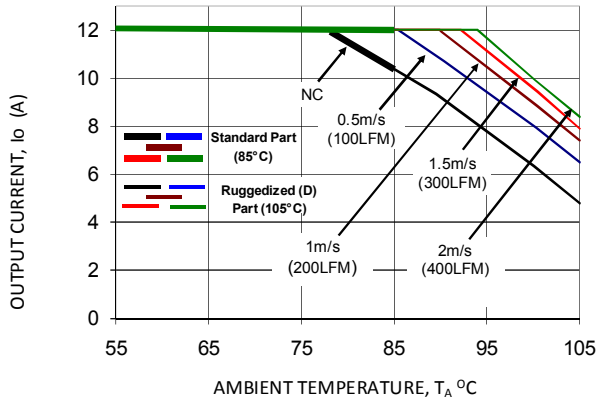

Vo=0.6V

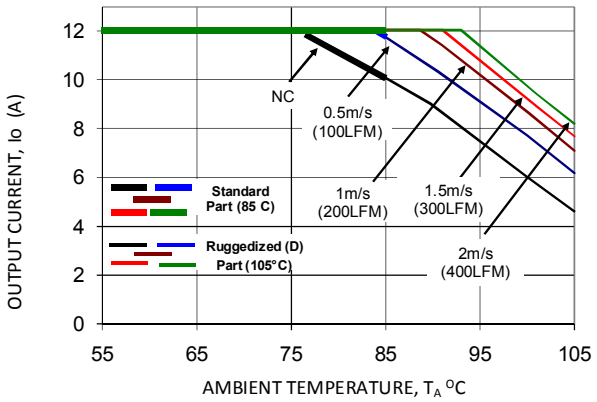

Vo=1.2V

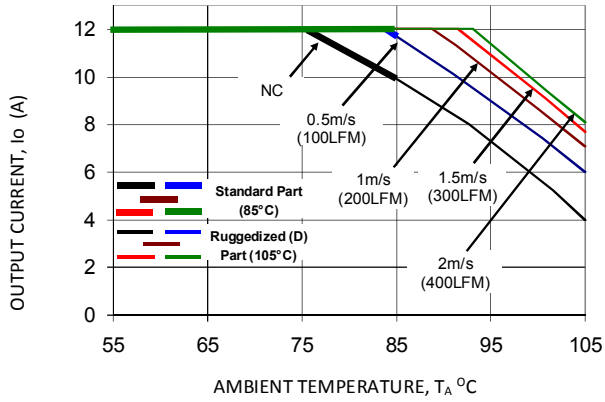

Vo=1.8V

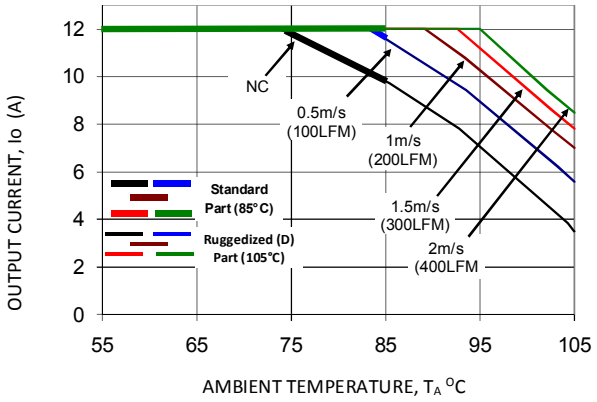

Vo=2.5V

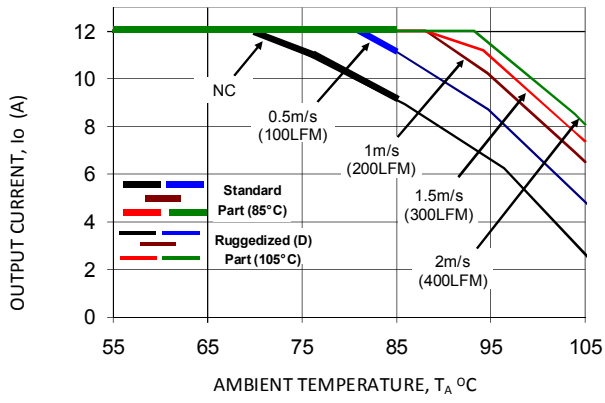

Vo=3.3V

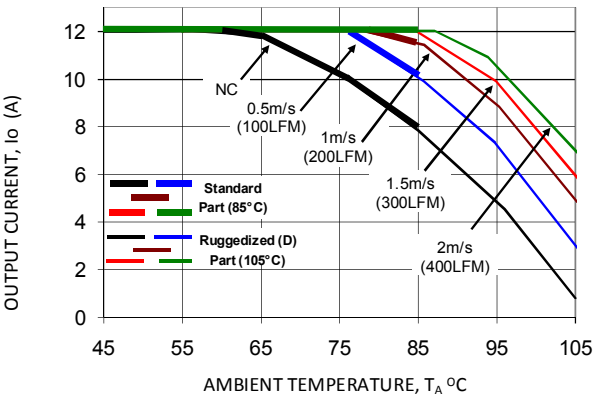

Vo=5.0V

© 2016 Bel Power Solutions & Protection

9. RIPPLE AND NOISE WAVEFORMS

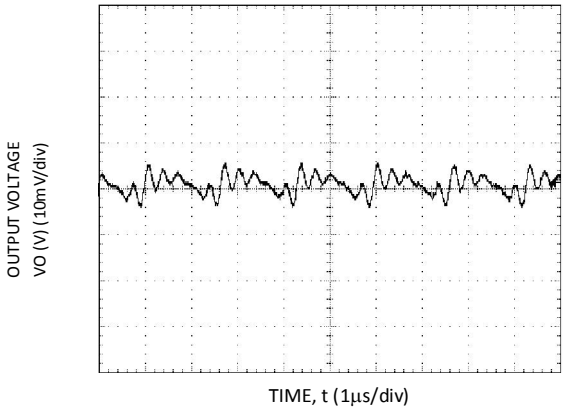

Vo=0.6V, Io = Io,max

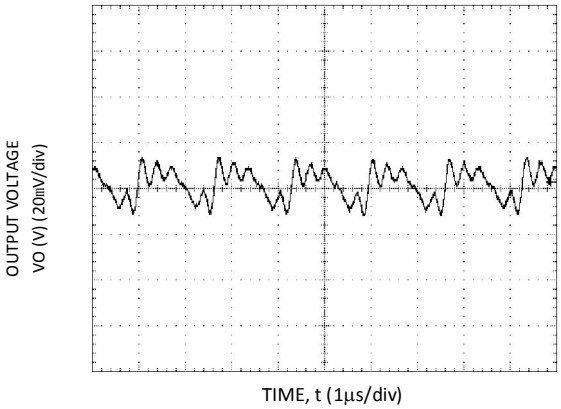

Vo=1.2V, Io = Io,max

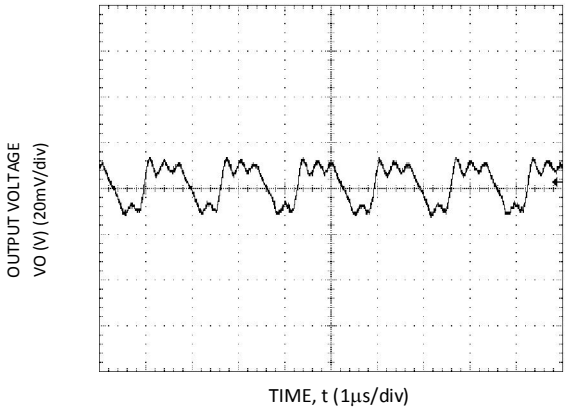

Vo=1.8V, Io = Io,max

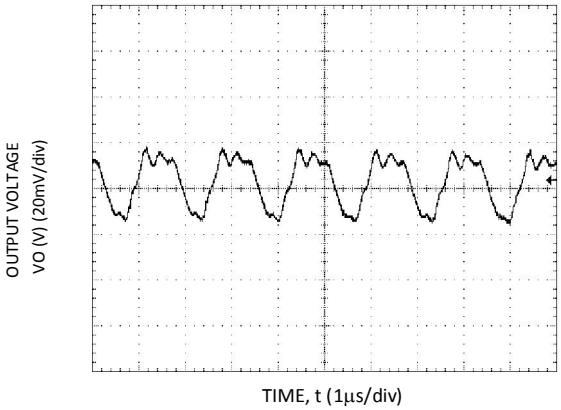

Vo=2.5V, Io = Io,max

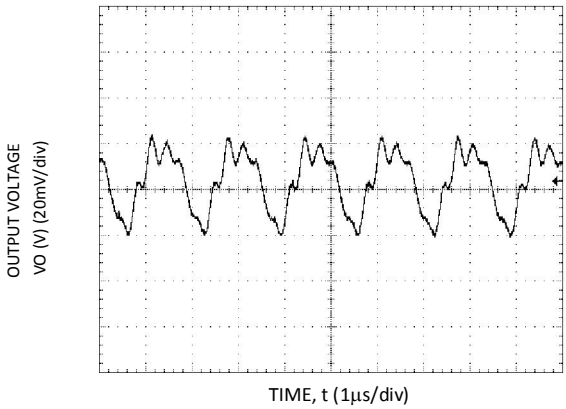

Vo=3.3V, Io = Io,max

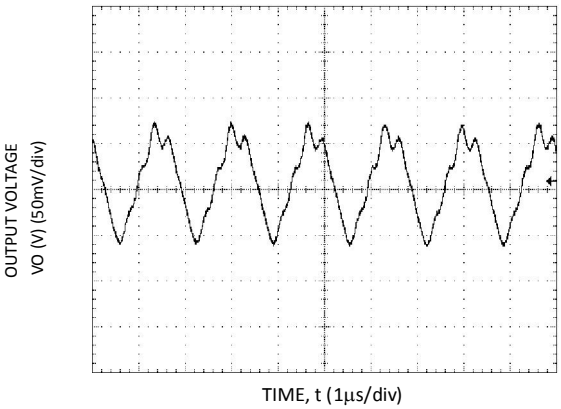

Vo=5.0V, Io = Io,max

Notes: CO=22µF ceramic, VIN = 12V

10. TRANSIENT RESPONSE WAVEFORMS

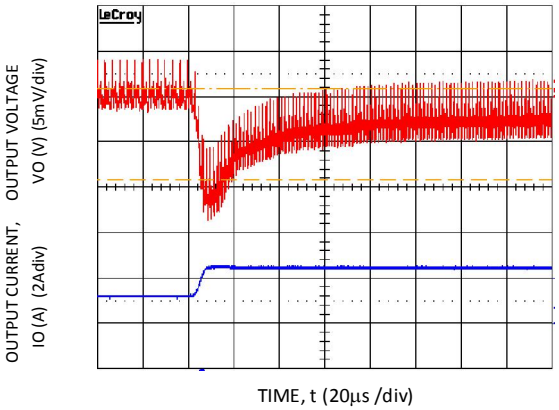

Transient Response to Dynamic Load Change from 50% to 100% at 12Vin, Cout=1x47uF + 4x330uF, CTune=33nF, RTune=178. Vo=0.6V

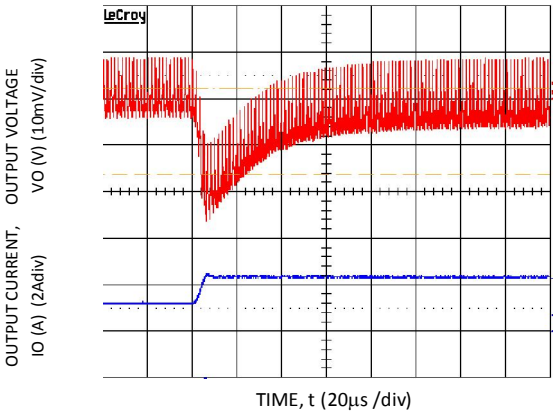

Transient Response to Dynamic Load Change from 50% to 100% at 12Vin, Cout=1x47uF + 2x330uF, CTune=12nF, RTune=178. Vo=1.2V

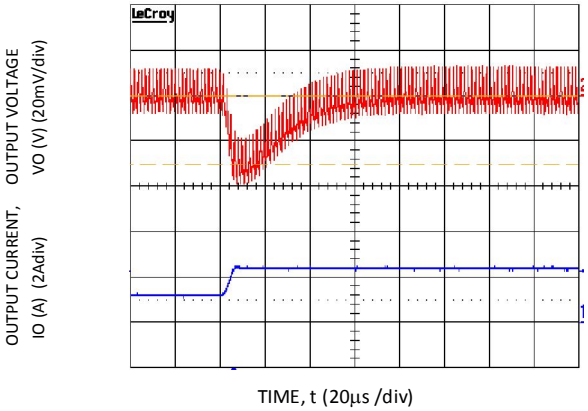

Transient Response to Dynamic Load Change from 50% to 100% at 12Vin, Cout= 1x47uF + 1x330uF, CTune=4700pF, RTune=178. Vo=1.8V

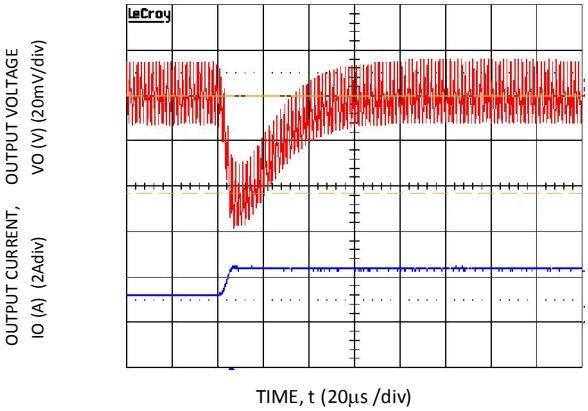

Transient Response to Dynamic Load Change from 50% to 100% at 12Vin, Cout=3x47uF,CTune=3300pF, RTune=178. Vo=2.5V

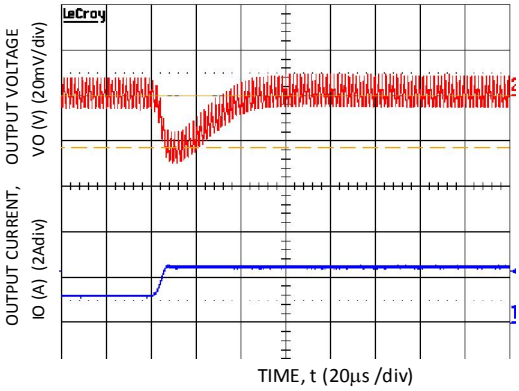

Transient Response to Dynamic Load Change from 50% to 100% at 12Vin, Cout= 3x47uF,CTune=3300pF, RTune=178. Vo=3.3V

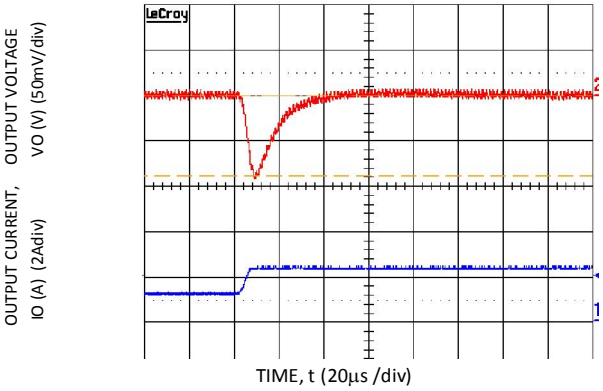

Transient Response to Dynamic Load Change from 50% to 100% at 12Vin, Cout=2x47uF,CTune=2200pF, RTune=261. Vo=5.0V

© 2016 Bel Power Solutions & Protection

11. STARTUP TIME

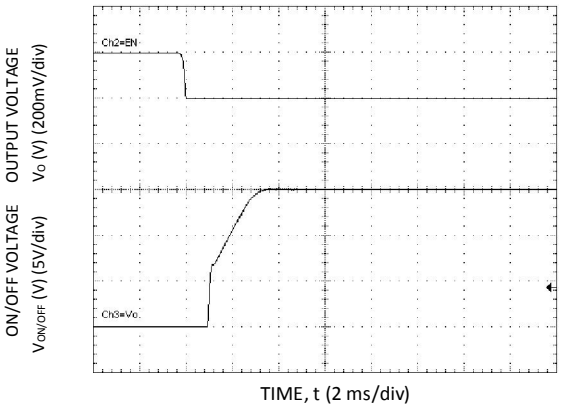

Start-up Using On/Off Voltage (Io = Io,max), Vo=0.6V

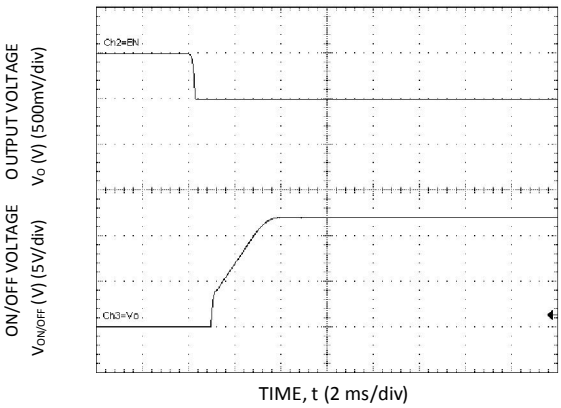

Start-up Using On/Off Voltage (Io = Io,max), Vo=1.2V

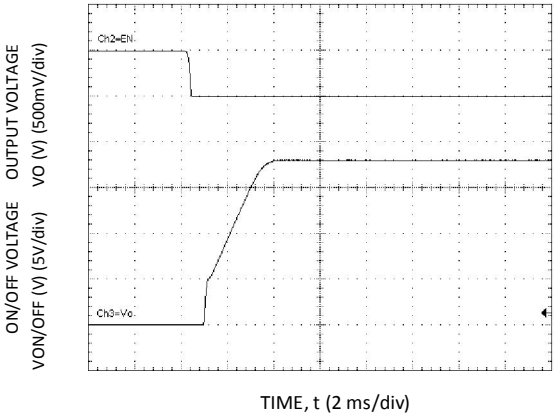

Start-up Using On/Off Voltage (Io = Io,max), Vo=1.8V

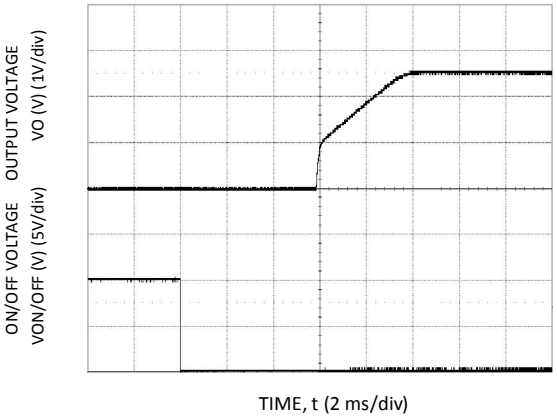

Start-up Using On/Off Voltage (Io = Io,max), Vo=2.5V

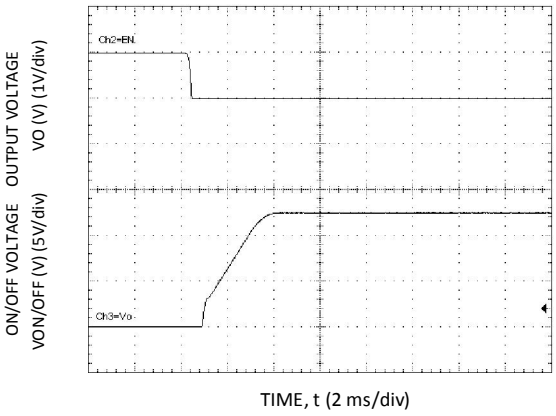

Start-up Using On/Off Voltage (Io = Io,max), Vo=3.3V

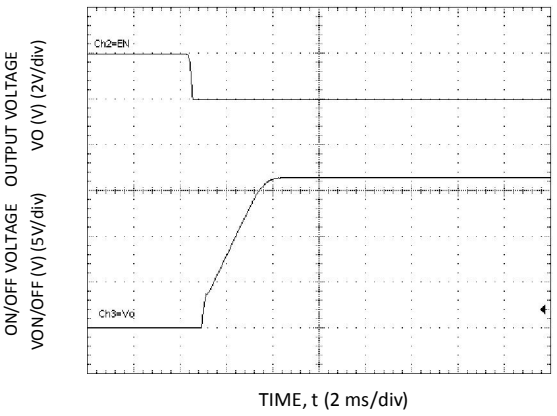

Start-up Using On/Off Voltage (Io = Io,max), Vo=5.0V

STARTUP TIME(CONTINUED)

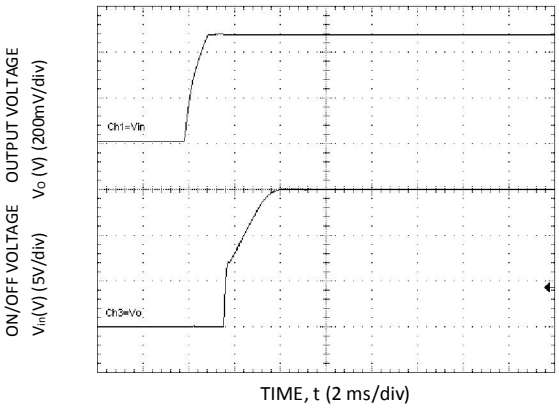

Start-up Using Input Voltage (VIN = 12V, Io = Io,max), Vo=0.6V

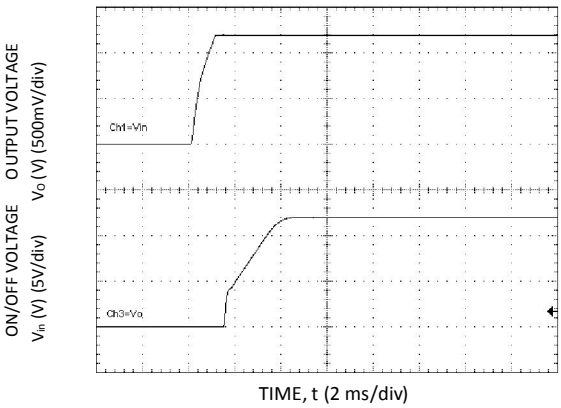

Start-up Using Input Voltage (VIN = 12V, Io = Io,max), Vo=1.2V

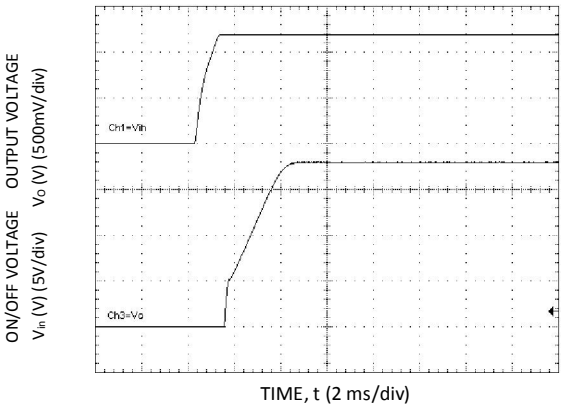

Start-up Using Input Voltage (VIN = 12V, Io = Io,max), Vo=1.8V

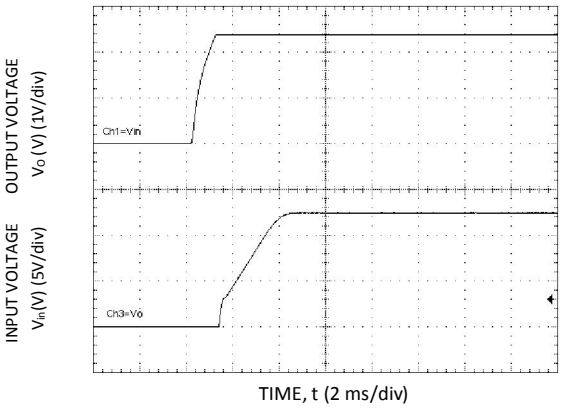

Start-up Using Input Voltage (VIN = 12V, Io = Io,max), Vo=2.5V

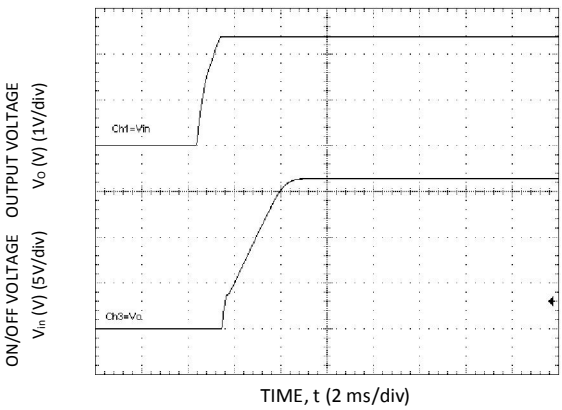

Start-up Using Input Voltage (VIN = 12V, Io = Io,max), Vo=3.3V

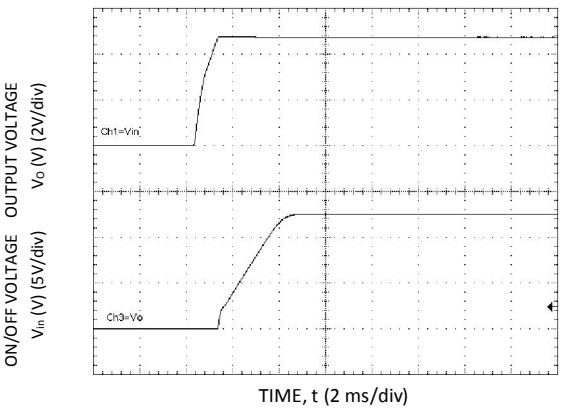

Start-up Using Input Voltage (VIN = 12V, Io = Io,max), Vo=5.0V

© 2016 Bel Power Solutions & Protection

12. INPUT FILTERING

The SLDN-12D1Ax module should be connected to a low ac-impedance source. A highly inductive source can affect the stability of the module. An input capacitance must be placed directly adjacent to the input pin of the module, to minimize input ripple voltage and ensure module stability.

To minimize input voltage ripple, ceramic capacitors are recommended at the input of the module. Figure 37 shows the input ripple voltage for various output voltages at 12A of load current with 2x22 µF or 3x22 µF ceramic capacitors and an input of 12V.

Figure 37

.

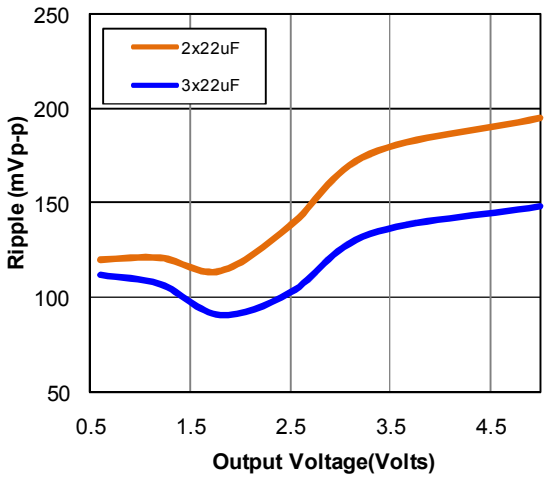

Note: Input ripple voltage for various output voltages with 12x22 µF or 3x22 µF ceramic capacitors at the input (12A load). Input voltage is 12V.

13. OUTPUT FILTERING

These modules are designed for low output ripple voltage and will meet the maximum output ripple specification with 0.1 µF ceramic and 22 µF ceramic capacitors at the output of the module. However, additional output filtering may be required by the system designer for a number of reasons. First, there may be a need to further reduce the output ripple and noise of the module. Second, the dynamic response characteristics may need to be customized to a particular load step change.

T To reduce the output ripple and improve the dynamic response to a step load change, additional capacitance at the output can be used. Low ESR polymer and ceramic capacitors are recommended to improve the dynamic response of the module. Figure 38 provides output ripple information for different external capacitance values at various Vo and a full load current of 12A. For stable operation of the module, limit the capacitance to less than the maximum output capacitance as specified in the electrical specification table. Optimal performance of the module can be achieved by using the Tunable LoopTM feature described later in this data sheet.

Figure 38

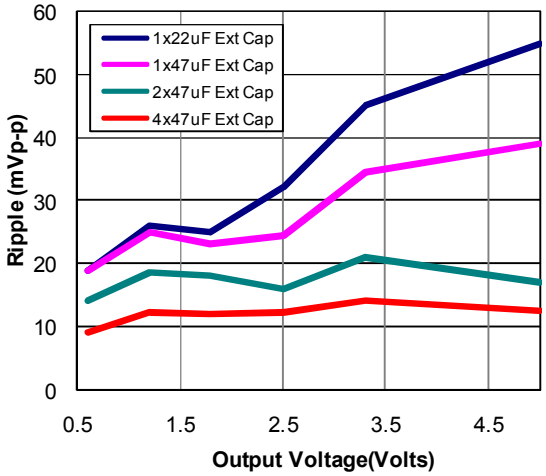

Note: Output ripple voltage for various output voltages with external 1x10 µF, 1x47 µF, 2x47 µF or 4x47 µF ceramic capacitors at the output (12A load). Input voltage is 12V.

14. SAFETY CONSIDERATIONS

For safety agency approval the power module must be installed in compliance with the spacing and separation requirements of the end-use safety agency standards, i.e., UL 60950-1 2nd, CSA C22.2 No. 60950-1-07, DIN EN 60950-1:2006 + A11 (VDE0805 Teil 1 + A11):2009-11; EN 60950-1:2006 + A11:2009-03.

For the converter output to be considered meeting the requirements of safety extra-low voltage (SELV), the input must meet SELV requirements. The power module has extra-low voltage (ELV) outputs when all inputs are ELV.

The input to these units is to be provided with a slow-blow fuse with a maximum rating of 15 A in the positive input lead.

© 2016 Bel Power Solutions & Protection

15. REMOTE ON/OFF

PARAMETER		DESCRIPTION	MIN	TYP	MAX	UNIT
Signal Low (Unit On)	Active Low	The remote on/off pin open, Unit on.	-0.2	-	0.6	V
Signal High (Unit Off)			2.0	-	Vin,max	V
Signal Low (Unit Off)	Active High	The remote on/off pin open, Unit on.	-0.2	-	0.6	V
Signal High (Unit On)			2.0	-	Vin,max	V

The SLDN-12D1Ax module can be turned ON and OFF either by using the ON/OFF pin (Analog interface) or through the PMBus interface (Digital). The module can be configured in a number of ways through the PMBus interface to react to the two ON/OFF inputs:
Module ON/OFF can be controlled only through the analog interface (digital interface ON/OFF commands are ignored)
Module ON/OFF can be controlled only through the PMBus interface (analog interface is ignored)
Module ON/OFF can be controlled by either the analog or digital interface

The default state of the module (as shipped from the factory) is to be controlled by the analog interface only. If the digital interface is to be enabled, or the module is to be controlled only through the digital interface, this change must be made through the PMBus. These changes can be made and written to non-volatile memory on the module so that it is remembered for subsequent use.

16. ANALOG ON/OFF

The SLDN-12D1Ax power modules feature an On/Off pin for remote On/Off operation. Two On/Off logic options are available. In the Positive Logic On/Off option, (device code suffix "0" – see Ordering Information), the module turns ON during a logic High on the On/Off pin and turns OFF during a logic Low. With the Negative Logic On/Off option, (device code suffix "L" – see Ordering Information), the module turns OFF during logic High and ON during logic Low. The On/Off signal should be always referenced to ground. For either On/Off logic option, leaving the On/Off pin disconnected will turn the module ON when input voltage is present.

For positive logic modules, the circuit configuration for using the On/Off pin is shown in Figure 39. When the external transistor Q2 is in the OFF state, the internal transistor Q1 is turned ON, and the internal PWM #Enable signal is pulled low causing the module to be ON. When transistor Q2 is turned ON, the On/Off pin is pulled low and the module is OFF. A suggested value for Rpullup is 20kΩ.

For negative logic On/Off modules, the circuit configuration is shown in Fig. 40. The On/Off pin should be pulled high with an external pull-up resistor (suggested value for the 3V to 14V input range is 20Kohms). When transistor Q2 is in the OFF state, the On/Off pin is pulled high, transistor Q1 is turned ON and the module is OFF. To turn the module ON, Q2 is turned ON pulling the On/Off pin low, turning transistor Q1 OFF resulting in the PWM Enable pin going high.

Figure 39

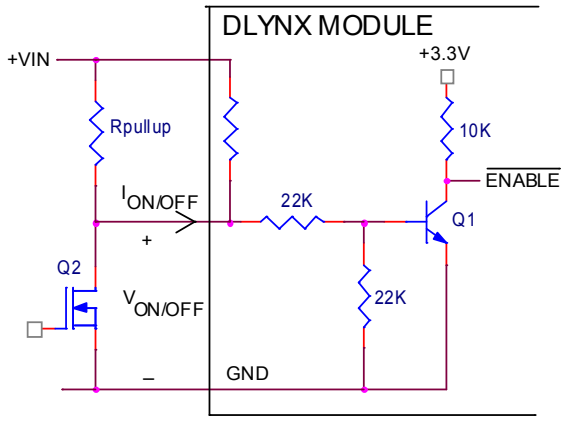

Circuit configuration for using positive On/Off logic

Figure 40

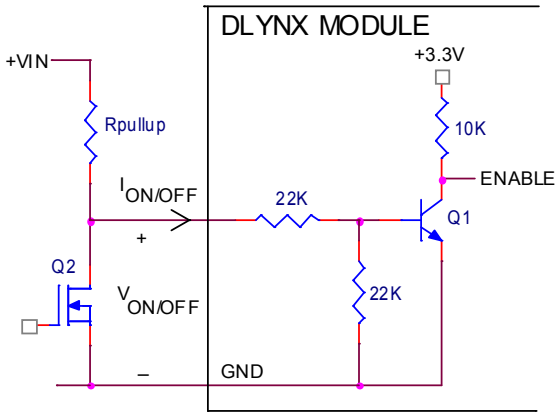

Circuit configuration for using negative On/Off logic

© 2016 Bel Power Solutions & Protection

17. DIGITAL ON/OFF

Please see the Digital Feature Descriptions section.

18. MONOTONIC START-UP AND SHUTDOWN

The SLDN-12D1Ax module has monotonic start-up and shutdown behavior for any combination of rated input voltage, output current and operating temperature range.

19. STARTUP INTO PRE-BIASED OUTPUT

The SLDN-12D1Ax module can start into a prebiased output as long as the prebias voltage is 0.5V less than the set output voltage.

20. OUTPUT VOLTAGE PROGRAMMING

The output voltage of the module is programmable to any voltage from 0.6dc to 5.5Vdc by connecting a resistor between the Trim and SIG_GND pins of the module. Certain restrictions apply on the output voltage set point depending on the input voltage. These are shown in the Output Voltage vs. Input Voltage Set Point Area plot in Fig. 41. The Upper Limit curve shows that for output voltages lower than 1V, the input voltage must be lower than the maximum of 14.4V. The Lower Limit curve shows that for output voltages higher than 0.6V, the input voltage needs to be larger than the minimum of 3V.

Figure 41

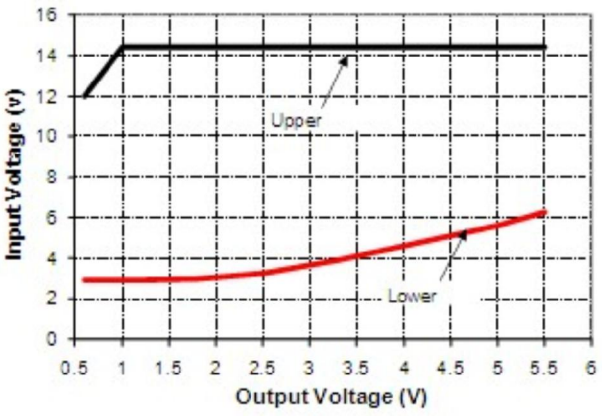

Output Voltage vs. Input Voltage Set Point Area plot showing limits where the output voltage can be set for different input voltages.

Figure 42

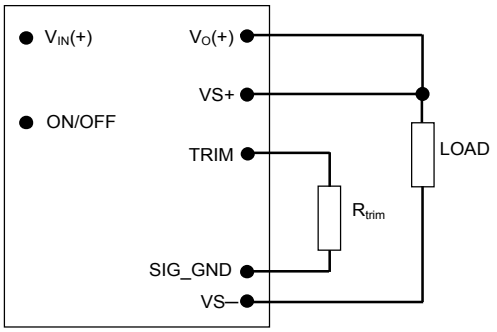

Circuit configuration for programming output voltage using an external resistor.

21. OUTPUT TRIM EQUATIONS

Without an external resistor between Trim and SIG_GND pins, the output of the module will be 0.6Vdc.To calculate the value of the trim resistor, Rtrim for a desired output voltage, should be as per the following equation:

$$Rtrim = \left[\frac{12}{(Vo - 0.6)} \right] k\Omega$$

Rtrim is the external resistor in KΩ
Vo is the desired output voltage.

Table 1 provides Rtrim values required for some common output voltages.

Table 1

VO, set (V)	Rtrim (KΩ)
0.6	Open
0.9	40
1.0	30
1.2	20
1.5	13.33
1.8	10
2.5	6.316
3.3	4.444
5.0	2.727

By using a ±0.5% tolerance trim resistor with a TC of ±100ppm, a set point tolerance of ±1.5% can be achieved as specified in the electrical specification.

22. DIGITAL OUTPUT VOLTAGE ADJUSTMENT

Please see the Digital Feature Descriptions section.

23. REMOTE SENSE

The SLDN-12D1Ax power modules has a Remote Sense feature to minimize the effects of distribution losses by regulating the voltage between the sense pins (VS+ and VS-). The voltage drop between the sense pins and the VOUT and GND pins of the module should not exceed 0.5V.

© 2016 Bel Power Solutions & Protection

24. VOLTAGE MARGINING

Output voltage margining can be implemented in the SLDN-12D1Ax modules by connecting a resistor, Rmargin-up, from the Trim pin to the ground pin for margining-up the output voltage and by connecting a resistor, Rmargin-down, from the Trim pin to output pin for margining-down. Figure 43 shows the circuit configuration for output voltage margining. Please consult your local Bel Power technical representative for additional details.

Figure 43

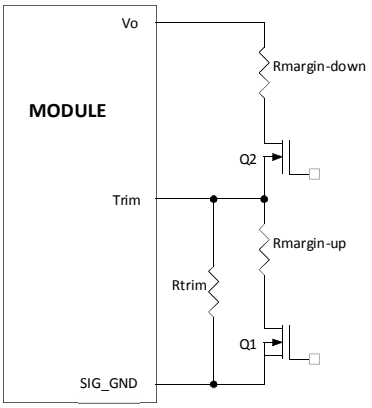

Circuit Configuration for margining Output voltage

25. DIGITAL OUTPUT VOLTAGE MARGINING

Please see the Digital Feature Descriptions section.

26. OUTPUT VOLTAGE SEQUENCING

The SLDN-12D1Ax module includes a sequencing feature, EZ-SEQUENCE that enables users to implement various types of output voltage sequencing in their applications. This is accomplished via an additional sequencing pin. When not using the sequencing feature, leave it unconnected.

The voltage applied to the SEQ pin should be scaled down by the same ratio as used to scale the output voltage down to the reference voltage of the module. This is accomplished by an external resistive divider connected across the sequencing voltage before it is fed to the SEQ pin as shown in Fig. 44. In addition, a small capacitor (suggested value 100pF) should be connected across the lower resistor R1.

For all Bel modules, the minimum recommended delay between the ON/OFF signal and the sequencing signal is 10ms to ensure that the module output is ramped up according to the sequencing signal. This ensures that the module soft-start routine is completed before the sequencing signal is allowed to ramp up.

Figure 44

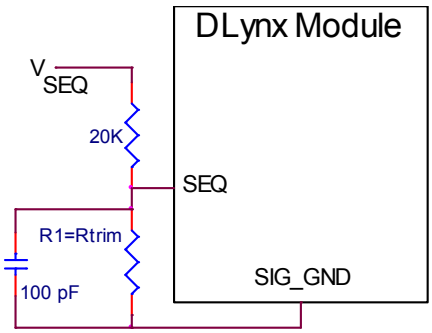

Circuit showing connection of the sequencing signal to the SEQ pin

When the scaled down sequencing voltage is applied to the SEQ pin, the output voltage tracks this voltage until the output reaches the set-point voltage. The final value of the sequencing voltage must be set higher than the set-point voltage of the module. The output voltage follows the sequencing voltage on a one-to-one basis. By connecting multiple modules together, multiple modules can track their output voltages to the voltage applied on
The SEQ pin.

To initiate simultaneous shutdown of the modules, the SEQ pin voltage is lowered in a controlled manner. The output voltage of the modules tracks the voltages below their set-point voltages on a one-to-one basis. A valid input voltage must be maintained until the tracking and output voltages reach ground potential.

Note that in all of modules, the PMBus Output Undervoltage Fault will be tripped when sequencing is employed. This will be detected using the STATUS_WORD and STATUS_VOUT PMBus commands. In addition, the SMBALERT# signal will be asserted low as occurs for all faults and warnings. To avoid the module shutting down due to the Output Undervoltage Fault, the module must be set to continue operation without interruption as the response to this fault (see the description of the PMBus command VOUT_UV_FAULT_RESPONSE for additional information).

27. OVERCURRENT PROTECTION

To provide protection in a fault (output overload) condition, the unit is equipped with internal current-limiting circuitry and can endure current limiting continuously. At the point of current-limit inception, the unit enters hiccup mode. The unit operates normally once the output current is brought back into its specified range.

28. DIGITAL ADJUSTABLE OVERCURRENT WARNING

Please see the Digital Feature Descriptions section.

29. OVERTEMPERATURE PROTECTION

To provide protection in a fault condition, the unit is equipped with a thermal shutdown circuit. The unit will shut down if the overtemperature threshold of 150℃ (typ) is exceeded at the thermal reference point Tref .Once the unit goes into thermal shutdown it will then wait to cool before attempting to restart.

© 2016 Bel Power Solutions & Protection

30. DIGITAL TEMPERATURE STATUS VIA PMBUS

Please see the Digital Feature Descriptions section.

31. DIGITAL ADJUSTABLE OUTPUT OVER AND UNDER VOLTAGE PROTECTION

Please see the Digital Feature Descriptions section

32. INPUT UNDERVOLTAGE LOCKOUT

At input voltages below the input undervoltage lockout limit, the module operation is disabled. The module will begin to operate at an input voltage above the undervoltage lockout turn-on threshold.

33. DIGITAL ADJUSTABLE INPUT UNDERVOLTAGE LOCKOUT

Please see the Digital Feature Descriptions section

34. DIGITAL ADJUSTABLE POWER GOOD THERSHOLDS

Please see the Digital Feature Descriptions section

35. SYNCHRONIZATION

The SLDN-12D1Ax module switching frequency can be synchronized to a signal with an external frequency within a specified range. Synchronization can be done by using the external signal applied to the SYNC pin of the module as shown in Fig. 45, with the converter being synchronized by the rising edge of the external signal. The Electrical Specifications table specifies the requirements of the external SYNC signal. **If the SYNC pin is not used, the module should free run at the default switching frequency.**

Figure 45

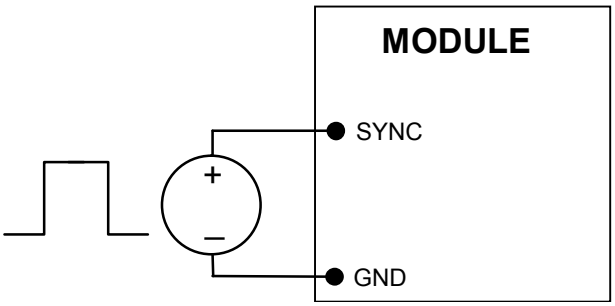

External source connections to synchronize switching frequency of the module.

36. MEASURING OUTPUT CURRENT, OUTPUT VOLTAGE AND INPUT VOLTAGE

Please see the Digital Feature Descriptions section.

37. DUAL LAYOUT

Identical dimensions and pin layout of Analog and Digital modules permit migration from one to the other without needing to change the layout. To support this, 2 separate Trim Resistor locations have to be provided in the layout. As shown in Fig. 46, for the digital modules, the resistor is connected between the TRIM pad and SGND and in the case of the analog module it is connected between TRIM and GND.

Figure 46

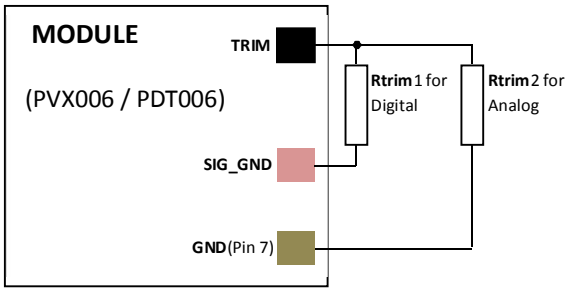

Connections to support either Analog or Digital module on the same layout.

© 2016 Bel Power Solutions & Protection

38. TUNABLE LOOP™

The SLDN-12D1Ax has a feature that optimizes transient response of the module called Tunable Loop™ .

External capacitors are usually added to the output of the module for two reasons: to reduce output ripple and noise (see Figure 38) and to reduce output voltage deviations from the steady-state value in the presence of dynamic load current changes. Adding external capacitance however affects the voltage control loop of the module, typically causing the loop to slow down with sluggish response. Larger values of external capacitance could also cause the module to become unstable.

The Tunable Loop™ allows the user to externally adjust the voltage control loop to match the filter network connected to the output of the module. The Tunable Loop™ is implemented by connecting a series R-C between the VS+ and TRIM pins of the module, as shown in Fig. 47. This R-C allows the user to externally adjust the voltage loop feedback compensation of the module.

Figure 47

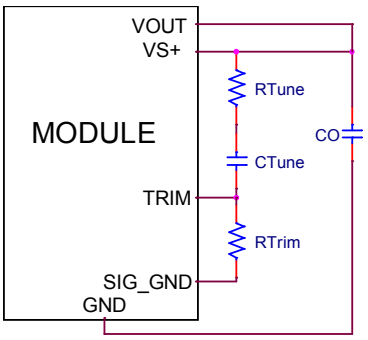

Circuit diagram showing connection of R_{TUME} and C_{TUNE} to tune the control loop of the module

Recommended values of RTUNE and CTUNE for different output capacitor combinations are given in Tables 2 and 3. Table 3 shows the recommended values of RTUNE and CTUNE for different values of ceramic output capacitors up to 1000uF that might be needed for an application to meet output ripple and noise requirements. Selecting RTUNE and CTUNE according to Table 3 will ensure stable operation of the module.

In applications with tight output voltage limits in the presence of dynamic current loading, additional output capacitance will be required. Table 3 lists recommended values of RTUNE and CTUNE in order to meet 2% output voltage deviation limits for some common output voltages in the presence of a 6A to 6A step change (50% of full load), with an input voltage of 12V.

Please contact your Bel Power technical representative to obtain more details of this feature as well as for guidelines on how to select the right value of external R-C to tune the module for best transient performance and stable operation for other output capacitance values.

Table 2

Co	1x47µF	2x47µF	4x47µF	6x47µF	10x47µF	20x47µF
R_{TUNE}	330	330	330	330	220	180
C_{TUNE}	100pF	360pF	1500pF	2200pF	10nF	6800pF

General recommended values of of RTUNE and CTUNE for Vin=12V and various external ceramic capacitor combinations.

Table 3

Vo	5V	3.3V	2.5V	1.8V	1.2V	0.6V
Co	5x47µF	1x47µF + 330µF Polymer	3x47µF + 330µF Polymer	1x47µF + 2x330µF Polymer	1x47µF + 3x330µF Polymer	3x47µF + 6x330µF Polymer
R_{TUNE}	330	330	270	270	220	180
C_{TUNE}	1500pF	2700pF	3300pF	5600pF	10nF	47nF
ΔV	99mV	58mV	47mV	34mV	24mV	12mV

Recommended values of RTUNE and CTUNE to obtain transient deviation of 2% of Vout for a 3A step load with Vin=12V

Note: The capacitors used in the Tunable Loop tables are 47 µF/3 mΩ ESR ceramic and 330 µF/12 mΩ ESR polymer capacitors

39. PMBUS INTERFACE CAPABILITY

The SLDN-12D1Ax power modules have a PMBus interface that supports both communication and control. The PMBus Power Management Protocol Specification can be obtained from www.pmbus.org. The modules support a subset of version 1.1 of the specification (see Table 6 for a list of the specific commands supported). Most module parameters can be programmed using PMBus and stored as defaults for later use.

All communication over the module PMBus interface must support the Packet Error Checking (PEC) scheme. The PMBus master must generate the correct PEC byte for all transactions, and check the PEC byte returned by the module.

The module also supports the SMBALERT response protocol whereby the module can alert the bus master if it wants to talk. For more information on the SMBus alert response protocol, see the System Management Bus (SMBus) specification.

The module has non-volatile memory that is used to store configuration settings. Not all settings programmed into the device are automatically saved into this non-volatile memory, only those specifically identified as capable of being stored can be saved (see Table 6 for which command parameters can be saved to non-volatile storage).

40. PMBUS DATA FORMAT

For commands that set thresholds, voltages or report such quantities, the module supports the “Linear” data format among the three data formats supported by PMBus. The Linear Data Format is a two byte value with an 11-bit, two’s complement mantissa and a 5-bit, two’s complement exponent. The format of the two data bytes is shown below:

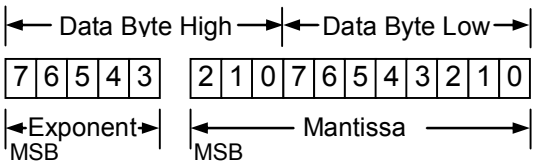

The value is of the number is then given by

$$Value = Mantissa \times 2^{Exponent}$$

© 2016 Bel Power Solutions & Protection

41. PMBUS ADDRESSING

The SLDN-12D1Ax modules can be addressed through the PMBus using a device address. The module has 64 possible addresses (0 to 63 in decimal) which can be set using resistors connected from the ADDR0 and ADDR1 pins to SIG_GND. Note that some of these addresses (0, 1, 2, 3, 4, 5, 6, 7, 8, 9, 10, 11 12, 40, 44, 45, 55 in decimal) are reserved according to the SMBus specifications and may not be useable. The address is set in the form of two octal (0 to 7) digits, with each pin setting one digit. The ADDR1 pin sets the high order digit and ADDR0 sets the low order digit. The resistor values suggested for each digit are shown in Table 4 (1% tolerance resistors are recommended). Note that if either address resistor value is outside the range specified in Table 4, the module will respond to address 127.

Table 4

Digit	Resistor Value (KΩ)
0	10
1	15.4
2	23.7
3	36.5
4	54.9
5	84.5
6	130
7	200

The user must know which I2C addresses are reserved in a system for special functions and set the address of the module to avoid interfering with other system operations. Both 100kHz and 400kHz bus speeds are supported by the module. Connection for the PMBus interface should follow the High Power DC specifications given in section 3.1.3 in the SMBus specification V2.0 for the 400kHz bus speed or the Low Power DC specifications in section 3.1.2. The complete SMBus specification is available from the SMBus web site, smbus.org.

Figure 48

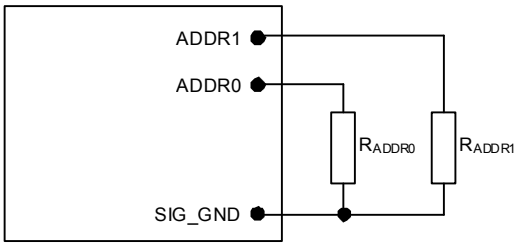

Circuit showing connection of resistors used to set the PMBus address of the module.

42. PMBUS ENABLE ON/OFF

The SLDN-12D1Ax module can also be turned on and off via the PMBus interface. The OPERATION command is used to actually turn the module on and off via the PMBus, while the ON_OFF_CONFIG command configures the combination of analog ON/OFF pin input and PMBus commands needed to turn the module on and off. Bit [7] in the OPERATION command data byte enables the module, with the following functions:

0 : Output is disabled
1 : Output is enabled

This module uses the lower five bits of the ON_OFF_CONFIG data byte to set various ON/OFF options as follows:

Bit Position	4	3	2	1	0
Access	r/w	r/w	r/w	r/w	r
Function	PU	CMD	CPR	POL	CPA
Default Value	1	0	1	1	1

PU: Sets the default to either operate any time input power is present or for the ON/OFF to be controlled by the analog ON/OFF input and the PMBus OPERATION command. This bit is used together with the CP, CMD and ON bits to determine startup.

Bit Value	Action
0	Module powers up any time power is present regardless of state of the analog ON/OFF pin
1	Module does not power up until commanded by the analog ON/OFF pin and the OPERATION command as programmed in bits [2:0] of the ON_OFF_CONFIG register.

CMD: The CMD bit controls how the device responds to the OPERATION command.

Bit Value	Action
0	Module ignores the ON bit in the OPERATION command
1	Module responds to the ON bit in the OPERATION command

CPR: Sets the response of the analog ON/OFF pin. This bit is used together with the CMD, PU and ON bits to determine startup.

Bit Value	Action
0	Module ignores the analog ON/OFF pin, i.e. ON/OFF is only controlled through the PMBUS via the OPERATION command
1	Module requires the analog ON/OFF pin to be asserted to start the unit

© 2016 Bel Power Solutions & Protection

43. PMBUS ADJUSTABLE SOFT START RISE TIME

The soft start rise time can be adjusted in the module via PMBus. When setting this parameter, make sure that the charging current for output capacitors can be delivered by the module in addition to any load current to avoid nuisance tripping of the overcurrent protection circuitry during startup. The TON_RISE command sets the rise time in ms, and allows choosing soft start times between 600µs and 9ms, with possible values listed in Table 5. Note that the exponent is fixed at -4 (decimal) and the upper two bits of the mantissa are also fixed at 0

Table 5

Rise Time	Exponent	Mantissa
600µs	11100	00000001010
900µs	11100	00000001110
1.2ms	11100	00000010011
1.8ms	11100	00000011101
2.7ms	11100	00000101011
4.2ms	11100	00001000011
6.0ms	11100	00001100000
9.0ms	11100	00010010000

44. OUTPUT VOLTAGE ADJUSTMENT USING THE PMBUS

The VOUT_SCALE_LOOP parameter is important for a number of PMBus commands related to output voltage trimming, margining, over/under voltage protection and the PGOOD thresholds. The output voltage of the module is set as the combination of the voltage divider formed by RTrim and a 20kΩ upper divider resistor inside the module, and the internal reference voltage of the module. The reference voltage VREF is nominally set at 600mV, and the output regulation voltage is then given by

$$V_{OUT} = \left[\frac{20000 + RTrim}{RTrim}\right] \times V_{REF}$$

Hence the module output voltage is dependent on the value of RTrim which is connected external to the module. The information on the output voltage divider ratio is conveyed to the module through the VOUT_SCALE_LOOP parameter which is calculated as follows:

$$VOUT_SCALE_LOOP = \frac{RTrim}{20000 + RTrim}$$

The VOUT_SCALE_LOOP parameter is specified using the “Linear” format and two bytes. The upper five bits [7:3] of the high byte are used to set the exponent which is fixed at –9 (decimal). The remaining three bits of the high byte [2:0] and the eight bits of the lower byte are used for the mantissa. The default value of the mantissa is 00100000000 corresponding to 256 (decimal), corresponding to a divider ratio of 0.5. The maximum value of the mantissa is 512 corresponding to a divider ratio of 1. Note that the resolution of the VOUT_SCALE_LOOP command is 0.2%.

When PMBus commands are used to trim or margin the output voltage, the value of VREF is what is changed inside the module, which in turn changes the regulated output voltage of the module.

The nominal output voltage of the module can be adjusted with a minimum step size of 0.4% over a ±25% range from nominal using the VOUT_TRIM command over the PMBus.

The VOUT_TRIM command is used to apply a fixed offset voltage to the output voltage command value using the “Linear” mode with the exponent fixed at –10 (decimal). The value of the offset voltage is given by

$$V_{OUT(offset)} = VOUT_TRIM \times 2^{-10}$$

This offset voltage is added to the voltage set through the divider ratio and nominal VREF to produce the trimmed output voltage. The valid range in two’s complement for this command is –4000h to 3FFFh. The high order two bits of the high byte must both be either 0 or 1. If a value outside of the +/-25% adjustment range is given with this command, the module will set it’s output voltage to the nominal value (as if VOUT_TRIM had been set to 0), assert SMBALRT#, set the CML bit in STATUS_BYTE and the invalid data bit in STATUS_CML.

45. OUTPUT VOLTAGE MARGINING USING THE PMBUS

The module can also have its output voltage margined via PMBus commands. The command VOUT_MARGIN_HIGH sets the margin high voltage, while the command VOUT_MARGIN_LOW sets the margin low voltage. Both the VOUT_MARGIN_HIGH and VOUT_MARGIN_LOW commands use the “Linear” mode with the exponent fixed at –10 (decimal). Two bytes are used for the mantissa with the upper bit [7] of the high byte fixed at 0. The actual margined output voltage is a combination of the VOUT_MARGIN_HIGH or VOUT_MARGIN_LOW and the VOUT_TRIM values as shown below:

$$V_{OUT(MH)} = (VOUT_MARGIN_HIGH + VOUT_TRIM) \times 2^{-10}$$

$$V_{OUT(ML)} = (VOUT_MARGIN_LOW + VOUT_TRIM) \times 2^{-10}$$

Note that the sum of the margin and trim voltages cannot be outside the ±25% window around the nominal output voltage. The data associated with VOUT_MARGIN_HIGH and VOUT_MARGIN_LOW can be stored to non-volatile memory using the STORE_DEFAULT_ALL command.

The module is commanded to go to the margined high or low voltages using the OPERATION command. Bits [5:2] are used to enable margining as follows:
00XX : Margin Off
0101 : Margin Low (Ignore Fault)
0110 : Margin Low (Act on Fault)
1001 : Margin High (Ignore Fault)
1010 : Margin High (Act on Fault)

46. PMBUS ADJUSTABLE OVERCURRENT WARNING

The SLDN-12D1Ax module can provide an overcurrent warning via the PMBus. The threshold for the overcurrent warning can be set using the parameter IOUT_OC_WARN_LIMIT. This command uses the “Linear” data format with a two byte data word where the upper five bits [7:3] of the high byte represent the exponent and the remaining three bits of the high byte [2: ent the mantissa. The exponent is fixed at –1 (decimal).The upper five bits of the mantissa are fixed at 0 while the lower six bits are programmable with a default value of 14A. The resolution of this warning limit is 500mA. The new sentence would be: The value of the IOUT_OC_WARN_LIMIT can be stored to non-volatile memory using the STORE_DEFAULT_ALL0] and the eight bits in the low byte repres command.

47. TEMPERATURE STATUS VIA PMBUS

The SLDN-12D1Ax module can provide information related to temperature of the module through the STATUS_TEMPERATURE command. The command returns information about whether the pre-set over temperature fault threshold and/or the warning threshold have been exceeded.

© 2016 Bel Power Solutions & Protection

48. PMBUS ADJUSTABLE OUTPUT OVER AND UNDER VOLTAGE PROTECTION

The SLDN-12D1Ax module has output over and under voltage protection capability. The PMBus command VOUT_OV_FAULT_LIMIT is used to set the output over voltage threshold from four possible values: 108%, 110%, 112% or 115% of the commanded output voltage. The command VOUT_UV_FAULT_LIMIT sets the threshold that causes an output under voltage fault and can also be selected from four possible values: 92%, 90%, 88% or 85%. The default values are 112% and 88% of commanded output voltage. Both commands use two data bytes formatted as two's complement binary integers. The "Linear" mode is used with the exponent fixed to –10 (decimal) and the effective over or under voltage trip points given by:

$$V_{OUT\,(OV_REQ)} = (VOUT_OV_FAULT_LIMIT) \times 2^{-10}$$

$$V_{OUT\,(UV_REQ)} = (VOUT_UV_FAULT_LIMIT) \times 2^{-10}$$

Values within the supported range for over and undervoltage detection thresholds will be set to the nearest fixed percentage. Note that the correct value for VOUT_SCALE_LOOP must be set in the module for the correct over or under voltage trip points to be calculated.

In addition to adjustable output voltage protection, the 6A Digital module can also be programmed for the response to the fault. The VOUT_OV_FAULT RESPONSE and VOUT_UV_FAULT_RESPONSE commands specify the response to the fault. Both these commands use a single data byte with the possible options as shown below.

- Continue operation without interruption (Bits [7:6] = 00, Bits [5:3] = xxx).
- Continue for four switching cycles and then shut down if the fault is still present, followed by no restart or continuous restart (Bits [7:6] = 01, Bits [5:3] = 000 means no restart, Bits [5:3] = 111 means continuous restart).
- Immediate shut down followed by no restart or continuous restart (Bits [7:6] = 10, Bits [5:3] = 000 means no restart, Bits [5:3] = 111 means continuous restart).
- Module output is disabled when the fault is present and the output is enabled when the fault no longer exists (Bits [7:6] = 11, Bits [5:3] = xxx).

Note: that separate response choices are possible for output over voltage or under voltage faults.

49. PMBUS ADJUSTABLE INPUT UNDERVOLTAGE LOCKOUT

The SLDN-12D1Ax module allows adjustment of the input under voltage lockout and hysteresis. The command VIN_ON allows setting the input voltage turn on threshold, while the VIN_OFF command sets the input voltage turn off threshold. For the VIN_ON command, possible values are 2.75V, and 3V to 14V in 0.5V steps. For the VIN_OFF command, possible values are 2.5V to 14V in 0.5V steps. If other values are entered for either command, they will be mapped to the closest of the allowed values.

VIN_ON must be set higher than VIN_OFF. Attempting to write either VIN_ON lower than VIN_OFF or VIN_OFF higher than VIN_ON results in the new value being rejected, SMBALERT being asserted along with the CML bit in STATUS_BYTE and the invalid data bit in STATUS_CML.

Both the VIN_ON and VIN_OFF commands use the "Linear" format with two data bytes. The upper five bits represent the exponent (fixed at -2) and the remaining 11 bits represent the mantissa. For the mantissa, the four most significant bits are fixed at 0.

50. POWER GOOD

The SLDN-12D1Ax module provides a Power Good (PGOOD) signal that is implemented with an open-drain output to indicate that the output voltage is within the regulation limits of the power module. The PGOOD signal will be de-asserted to a low state if any condition such as overtemperature, overcurrent or loss of regulation occurs that would result in the output voltage going outside the specified thresholds. The PGOOD thresholds are user selectable via the PMBus (the default values are as shown in the Feature Specifications Section). Each threshold is set up symmetrically above and below the nominal value. The POWER_GOOD_ON command sets the output voltage level above which PGOOD is asserted (lower threshold). For example, with a 1.2V nominal output voltage, the POWER_GOOD_ON threshold can set the lower threshold to 1.14 or 1.1V. Doing this will automatically set the upper thresholds to 1.26 or 1.3V.
.

The POWER_GOOD_OFF command sets the level below which the PGOOD command is de-asserted. This command also sets two thresholds symmetrically placed around the nominal output voltage. Normally, the POWER_GOOD_ON threshold is set higher than the POWER_GOOD_OFF threshold.

Both POWER_GOOD_ON and POWER_GOOD_OFF commands use the “Linear” format with the exponent fixed at –10 (decimal). The two thresholds are given by

$$V_{OUT(PGOOD_ON)} = (POWER_GOOD_ON) \times 2^{-10}$$

$$V_{OUT(PGOOD_OFF)} = (POWER_GOOD_OFF) \times 2^{-10}$$

Both commands use two data bytes with bit [7] of the high byte fixed at 0, while the remaining bits are r/w and used to set the mantissa using two’s complement representation. Both commands also use the VOUT_SCALE_LOOP parameter so it must be set correctly. The default value of POWER_GOOD_ON is set at 1.1035V and that of the POWER_GOOD_OFF is set at 1.08V. The values associated with these commands can be stored in non-volatile memory using the STORE_DEFAULT_ALL command.

The PGOOD terminal can be connected through a pullup resistor(suggested value 100 KΩ) to a source of 5VDC or lower.

51. MEASURREMENT OF OUTPUT CURRENT, OUTPUT VOLTAGE AND INPUT VOLTAGE

The SLDN-12D1Ax module is capable of measuring key module parameters such as output current and voltage and input voltage and providing this information through the PMBus interface. Roughly every 200µs, the module makes 16 measurements each of output current, voltage and input voltage. Average values of of these 16 measurements are then calculated and placed in the appropriate registers. The values in the registers can then be read using the PMBus interface.

© 2016 Bel Power Solutions & Protection

52. MEASURING OUTPUT CURRENT USING THE PMBUS

The SLDN-12D1Ax module measures current by using the inductor winding resistance as a current sense element. The inductor winding resistance is then the current gain factor used to scale the measured voltage into a current reading. This gain factor is the argument of the IOUT_CAL_GAIN command, and consists of two bytes in the linear data format. The exponent uses the upper five bits [7:3] of the high data byte in two-s complement format and is fixed at –15 (decimal). The remaining 11 bits in two's complement binary format represent the mantissa.

The current measurement accuracy is also improved by each module being calibrated during manufacture with the offset in the current reading. The IOUT_CAL_OFFSET command is used to store and read the current offset. The argument for this command consists of two bytes composed of a 5-bit exponent (fixed at -4d) and a 11-bit mantissa. This command has a resolution of 62.5mA and a range of -4000mA to +3937.5mA. During manufacture, each module is calibrated by measuring and storing the current gain factor and offset into non-volatile storage.

The READ_IOUT command provides module average output current information. This command only supports positive or current sourced from the module. If the converter is sinking current a reading of 0 is provided. The READ_IOUT command returns two bytes of data in the linear data format. The exponent uses the upper five bits [7:3] of the high data byte in two-s complement format and is fixed at –4 (decimal). The remaining 11 bits in two's complement binary format represent the mantissa with the 11th bit fixed at 0 since only positive numbers are considered valid.

Note that the current reading provided by the module is not corrected for temperature. The temperature corrected current reading for module temperature TModule can be estimated using the following equation

$$I_{OUT,CORR} = \frac{I_{READ_OUT}}{1 + [(T_{IND} - 30) \times 0.00393]}$$

where IOUT_CORR is the temperature corrected value of the current measurement, IREAD_OUT is the module current measurement value, TIND is the temperature of the inductor winding on the module. Since it may be difficult to measure TIND, it may be approximated by an estimate of the module temperature.

Measuring Output Voltage Using the PMBus

The SLDN-12D1Ax module can provide output voltage information using the READ_VOUT command. The command returns two bytes of data all representing the mantissa while the exponent is fixed at -10 (decimal).

During manufacture of the module, offset and gain correction values are written into the non-volatile memory of the module. The command VOUT_CAL_OFFSET can be used to read and/or write the offset (two bytes consisting of a 16-bit mantissa in two's complement format) while the exponent is always fixed at -10 (decimal). The allowed range for this offset correction is -125 to 124mV. The command VOUT_CAL_GAIN can be used to read and/or write the gain correction - two bytes consisting of a five-bit exponent (fixed at -8) and a 11-bit mantissa. The range of this correction factor is -0.125V to +0.121V, with a resolution of 0.004V. The corrected output voltage reading is then given by:

$$V_{OUT}(Final) = [V_{OUT}(Initial) \times (1 + VOUT_CAL_GAIN)] + VOUT_CAL_OFFSET$$

53. MEASURING INPPUT VOLTAGE USING THE PMBUS

The SLDN-12D1Ax module can provide output voltage information using the READ_VIN command. The command returns two bytes of data in the linear format. The upper five bits [7:3] of the high data form the two's complement representation of the mantissa which is fixed at –5 (decimal). The remaining 11 bits are used for two's complement representation of the mantissa, with the 11th bit fixed at zero since only positive numbers are valid.

During module manufacture, offset and gain correction values are written into the non-volatile memory of the module. The command VIN_CAL_OFFSET can be used to read and/or write the offset - two bytes consisting of a five-bit exponent (fixed at -5) and a11-bit mantissa in two's complement format. The allowed range for this offset correction is -2 to 1.968V, and the resolution is 32mV. The command VIN_CAL_GAIN can be used to read and/or write the gain correction - two bytes consisting of a five-bit exponent (fixed at -8) and a 11-bit mantissa. The range of this correction factor is -0.125V to +0.121V, with a resolution of 0.004V. The corrected output voltage reading is then given by:

$$V_{IN}(Final) = [V_{IN}(Initial) \times (1 + VIN_CAL_GAIN)] + VIN_CAL_OFFSET$$

54. READING THE STATUS OF THE MODULE USING THE PMBUS

The SLDN-12D1Ax module supports a number of status information commands implemented in PMBus. However, not all features are supported in these commands. A 1 in the bit position indicates the fault that is flagged.

STATUS_BYTE : Returns one byte of information with a summary of the most critical device faults.

Bit Position	Flag	Default Value
7	X	0
6	OFF	0
5	VOUT Overvoltage	0
4	IOUT Overcurrent	0
3	VIN Undervoltage	0
2	Temperature	0
1	CML (Comm. Memory Fault)	0
0	None of the above	0

STATUS_WORD : Returns two bytes of information with a summary of the module's fault/warning conditions.

Bit Position	Flag	Default Value
7	X	0
6	OFF	0
5	VOUT Overvoltage	0
4	IOUT Overcurrent	0
3	VIN Undervoltage	0
2	Temperature	0
1	CML (Comm. Memory Fault)	0
0	None of the above	0

Bit Position	Flag	Default Value
7	VOUT fault or warning	0
6	IOUT fault or warning	0
5	X	0
4	X	0
3	POWER_GOOD# (is negated)	0
2	X	0
1	X	0
0	X	0

© 2016 Bel Power Solutions & Protection

READING THE STATUS OF THE MODULE USING THE PMBUS(CONTINIUED)

STATUS_VOUT : Returns one byte of information relating to the status of the module's output voltage related faults.

Bit Position	Flag	Default Value
7	VOUT OV Fault	0
6	X	0
5	X	0
4	VOUT UV Fault	0
3	X	0
2	X	0
1	X	0
0	X	0

STATUS_IOUT : Returns one byte of information relating to the status of the module's output voltage related faults.

Bit Position	Flag	Default Value
7	IOUT OC Fault	0
6	X	0
5	IOUT OC Warning	0
4	X	0
3	X	0
2	X	0
1	X	0
0	X	0

STATUS_TEMPERATURE : Returns one byte of information relating to the status of the module's temperature related faults.

Bit Position	Flag	Default Value
7	OT Fault	0
6	OT Warning	0
5	X	0
4	X	0
3	X	0
2	X	0
1	X	0
0	X	0

STATUS_CML : Returns one byte of information relating to the status of the module's communication related faults.

Bit Position	Flag	Default Value
7	Invalid/Unsupported Command	0
6	Invalid/Unsupported Command	0
5	Packet Error Check Failed	0
4	X	0
3	X	0
2	X	0
1	Other Communication Fault	0
0	X	0

READING THE STATUS OF THE MODULE USING THE PMBUS(CONTINIUED)

MFR_VIN_MIN : Returns minimum input voltage as two data bytes of information in Linear format (upper five bits are exponent – fixed at -2, and lower 11 bits are mantissa in two's complement format – fixed at 12)

MFR_VOUT_MIN : Returns minimum output voltage as two data bytes of information in Linear format (upper five bits are exponent – fixed at -10, and lower 11 bits are mantissa in two's complement format – fixed at 614)

MFR_SPECIFIC_00 : Returns information related to the type of module and revision number. Bits [7:2] in the Low Byte indicate the module type (000000 corresponds to the SLDN-06D1Ax series of module), while bits [7:3] indicate the revision number of the module.

Low Byte

Bit Position	Flag	Default Value
7:2	Module Name	000000
1:0	Reserved	10

High Byte

Bit Position	Flag	Default Value
7:3	Module Revision Number	None
2:0	Reserved	000

© 2016 Bel Power Solutions & Protection

55. SUMMARY OF SUPPORTED PMBUS COMMANDS

Please refer to the PMBus 1.1 specification for more details of these commands.

Table 6

Hex Code	Command	Brief Description	Non-Volatile Memory Storage
01	OPERATION	Turn Module on or off. Also used to margin the output voltage Format: Unsigned Binary Bit Position: 7, 6, 5, 4, 3, 2, 1, 0 Access: r/w, r, r/w, r/w, r/w, r/w, r, r Function: On, X, Margin, X, X Default Value: 0, 0, 0, 0, 0, 0, X, X	
02	ON_OFF_CONFIG	Configures the ON/OFF functionality as a combination of analog ON/OFF pin and PMBus commands Format: Unsigned Binary Bit Position: 7, 6, 5, 4, 3, 2, 1, 0 Access: r, r, r, r/w, r/w, r/w, r/w, r Function: X, X, X, pu, cmd, cpr, pol, cpa Default Value: 0, 0, 0, 1, 0, 1, 1, 1	YES
03	CLEAR_FAULTS	Clear any fault bits that may have been set, also releases the SMBALERT# signal if the device has been asserting it.	
10	WRITE_PROTECT	Used to control writing to the module via PMBus. Copies the current register setting in the module whose command code matches the value in the data byte into non-volatile memory (EEPROM) on the module Format: Unsigned Binary Bit Position: 7, 6, 5, 4, 3, 2, 1, 0 Access: r/w, r/w, r/w, x, x, x, x, x Function: bit7, bit6, bit5, X, X, X, X, X Default Value: 0, 0, 0, X, X, X, X, X Bit5: 0 – Enables all writes as permitted in bit6 or bit7 1 – Disables all writes except the WRITE_PROTECT, OPERATION and ON_OFF_CONFIG (bit 6 and bit7 must be 0) Bit 6: 0 – Enables all writes as permitted in bit5 or bit7 1 – Disables all writes except for the WRITE_PROTECT and OPERATION commands (bit5 and bit7 must be 0) Bit7: 0 – Enables all writes as permitted in bit5 or bit6 1 – Disables all writes except for the WRITE_PROTECT command (bit5 and bit6 must be 0)	YES
11	STORE_DEFAULT_ALL	Copies all current register settings in the module into non-volatile memory (EEPROM) on the module. Takes about 50ms for the command to execute.	
12	RESTORE_DEFAULT_ALL	Restores all current register settings in the module from values in the module non-volatile memory (EEPROM)	
13	STORE_DEFAULT_CODE	Copies the current register setting in the module whose command code matches the value in the data byte into non-volatile memory (EEPROM) on the module Bit Position: 7, 6, 5, 4, 3, 2, 1, 0 Access: w, w, w, w, w, w, w, w Function: Command code	
14	RESTORE_DEFAULT_CODE	Restores the current register setting in the module whose command code matches the value in the data byte from the value in the module non-volatile memory (EEPROM) Bit Position: 7, 6, 5, 4, 3, 2, 1, 0 Access: w, w, w, w, w, w, w, w Function: Command code	
20	VOUT_MODE	The module has MODE set to Linear and Exponent set to -10. These values cannot be changed Bit Position: 7, 6, 5, 4, 3, 2, 1, 0 Access: r, r, r, r, r, r, r, r Function: Mode, Exponent Default Value: 0, 0, 0, 1, 0, 1, 1, 0	

SUMMARY OF SUPPORTED PMBUS COMMANDS(CONTINUED)

Hex Code	Command	Brief Description	Non-Volatile Memory Storage
22	VOUT_TRIM	Apply a fixed offset voltage to the output voltage command value Format: Linear, two's complement binary Bit Position: 7 6 5 4 3 2 1 0 Access: r/w r r/w r/w r/w r/w r/w r/w Function: High Byte Default Value: 0 0 0 0 0 0 0 0 Bit Position: 7 6 5 4 3 2 1 0 Access: r/w r/w r/w r/w r/w r/w r/w r/w Function: Low Byte Default Value: 0 0 0 0 0 0 0 0	YES
25	VOUT_MARGIN_HIGH	Sets the target voltage for margining the output high Format: Linear, two's complement binary Bit Position: 7 6 5 4 3 2 1 0 Access: r r/w r/w r/w r/w r/w r/w r/w Function: High Byte Default Value: 0 0 0 0 0 1 0 1 Bit Position: 7 6 5 4 3 2 1 0 Access: r/w r/w r/w r/w r/w r/w r/w r/w Function: Low Byte Default Value: 0 1 0 0 0 1 1 1	YES
26	VOUT_MARGIN_LOW	Sets the target voltage for margining the output low Format: Linear, two's complement binary Bit Position: 7 6 5 4 3 2 1 0 Access: r r/w r/w r/w r/w r/w r/w r/w Function: High Byte Default Value: 0 0 0 0 0 1 0 0 Bit Position: 7 6 5 4 3 2 1 0 Access: r/w r/w r/w r/w r/w r/w r/w r/w Function: Low Byte Default Value: 0 1 0 1 0 0 0 1	YES
29	VOUT_SCALE_LOOP	Sets the scaling of the output voltage – equal to the feedback resistor divider ratio Format: Linear, two's complement binary Bit Position: 7 6 5 4 3 2 1 0 Access: r r r r r r r/w r/w Function: Exponent Mantissa Default Value: 1 0 1 1 1 0 0 1 Bit Position: 7 6 5 4 3 2 1 0 Access: r/w r/w r/w r/w r/w r/w r/w r/w Function: Mantissa Default Value: 0 0 0 0 0 0 0 0	YES
35	VIN_ON	Sets the value of input voltage at which the module turns on Format: Linear, two's complement binary Bit Position: 7 6 5 4 3 2 1 0 Access: r r r r r r r r Function: Exponent Mantissa Default Value: 1 1 1 1 0 0 0 0 Bit Position: 7 6 5 4 3 2 1 0 Access: r r/w r/w r/w r/w r/w r/w r/w Function: Mantissa Default Value: 0 0 0 0 1 0 1 1	YES

© 2016 Bel Power Solutions & Protection

SUMMARY OF SUPPORTED PMBUS COMMANDS(CONTINIUED)

Hex Code	Command	Brief Description	Non-Volatile Memory Storage
36	VIN_OFF	Sets the value of input voltage at which the module turns off Format: Linear, two's complement binary Bit Position: 7 6 5 4 3 2 1 0 Access: r r r r r r r r Function: Exponent / Mantissa Default Value: 1 1 1 1 0 0 0 0 Bit Position: 7 6 5 4 3 2 1 0 Access: r r/w r/w r/w r/w r/w r/w r/w Function: Mantissa Default Value: 0 0 0 0 1 0 1 0	YES
38	IOUT_CAL_GAIN	Returns the value of the gain correction term used to correct the measured output current Format: Linear, two's complement binary Bit Position: 7 6 5 4 3 2 1 0 Access: r r r r r r r r/w Function: Exponent / Mantissa Default Value: 1 0 0 0 1 0 0 V Bit Position: 7 6 5 4 3 2 1 0 Access: r/w r/w r/w r/w r/w r/w r/w r/w Function: Mantissa Default Value: V: Variable based on factory calibration	YES
39	IOUT_CAL_OFFSET	Returns the value of the offset correction term used to correct the measured output current Format: Linear, two's complement binary Bit Position: 7 6 5 4 3 2 1 0 Access: r r r r r r/w r r Function: Exponent / Mantissa Default Value: 1 1 1 0 0 V 0 0 Bit Position: 7 6 5 4 3 2 1 0 Access: r r r/w r/w r/w r/w r/w r/w Function: Mantissa Default Value: 0 0 V: Variable based on factory calibration	YES
40	VOUT_OV_FAULT_LIMIT	Sets the voltage level for an output overvoltage fault. Exponent is fixed at -10. Suggested value shown for 1.2Vo. Should be changed for different output voltage. Values can be 108%, 110%, 112% or 115% of output voltage Format: Linear, two's complement binary Bit Position: 7 6 5 4 3 2 1 0 Access: r r/w r/w r/w r/w r/w r/w r/w Function: High Byte Default Value: 0 0 0 0 0 1 0 1 Bit Position: 7 6 5 4 3 2 1 0 Access: r/w r/w r/w r/w r/w r/w r/w r/w Function: Low Byte Default Value: 0 1 1 0 0 0 0 0	YES
41	VOUT_OV_FAULT_RESPONSE	Instructs the module on what action to take in response to a output overvoltage fault Format: Unsigned Binary Bit Position: 7 6 5 4 3 2 1 0 Access: r/w r/w r/w r/w r/w r r r Function: RSP[1] RSP[0] RS[2] RS[1] RS[0] X X X Default Value: 1 1 1 1 1 1 0 0	YES

SUMMARY OF SUPPORTED PMBUS COMMANDS(CONTINIUED)

Hex Code	Command	Brief Description	Non-Volatile Memory Storage
44	VOUT_UV_FAULT_LIMIT	Sets the voltage level for an output undervoltage fault. Exponent is fixed at -10. Suggested value shown for 1.2Vo. Should be changed for different output voltage. Values can be 92%, 90%, 88% or 85% of output voltage	YES

Format	Linear, two's complement binary							
Bit Position	7	6	5	4	3	2	1	0
Access	r	r/w	r/w	r/w	r/w	r/w	r/w	r/w
Function	High Byte							
Default Value	0	0	0	0	0	1	0	0
Bit Position	7	6	5	4	3	2	1	0
Access	r/w	r/w	r/w	r/w	r/w	r/w	r/w	r/w
Function	Low Byte							
Default Value	0	0	1	1	1	0	0	1

Hex Code	Command	Brief Description	Non-Volatile Memory Storage
45	VOUT_UV_FAULT_RESPONSE	Instructs the module on what action to take in response to a output undervoltage fault	YES

Format	Unsigned Binary							
Bit Position	7	6	5	4	3	2	1	0
Access	r/w	r/w	r/w	r/w	r/w	r	r	r
Function	RSP [1]	RSP [0]	RS[2]	RS[1]	RS[0]	X	X	X
Default Value	0	0	0	0	0	1	0	0

Hex Code	Command	Brief Description	Non-Volatile Memory Storage
46	IOUT_OC_FAULT_LIMIT	Sets the output overcurrent fault level in A (cannot be changed)	YES

Format	Linear, two's complement binary							
Bit Position	7	6	5	4	3	2	1	0
Access	r	r	r	r	r	r	r	r
Function	Exponent					Mantissa		
Default Value	1	1	1	1	1	0	0	0
Bit Position	7	6	5	4	3	2	1	0
Access	r	r	r	r	r	r	r	r
Function	Mantissa							
Default Value	0	0	0	1	1	1	1	0

Hex Code	Command	Brief Description	Non-Volatile Memory Storage
4A	IOUT_OC_WARN_LIMIT	Sets the output overcurrent warning level in A	YES

Format	Linear, two's complement binary							
Bit Position	7	6	5	4	3	2	1	0
Access	r	r	r	r	r	r	r	r
Function	Exponent					Mantissa		
Default Value	1	1	1	1	1	0	0	0
Bit Position	7	6	5	4	3	2	1	0
Access	r	r	r/w	r/w	r/w	r/w	r/w	r/w
Function	Mantissa							
Default Value	0	0	0	1	1	1	0	0

Hex Code	Command	Brief Description	Non-Volatile Memory Storage
5E	POWER_GOOD_ON	Sets the output voltage level at which the PGOOD pin is asserted high. Exponent is fixed at -10.	YES

Format	Linear, two's complement binary							
Bit Position	7	6	5	4	3	2	1	0
Access	r	r/w	r/w	r/w	r/w	r/w	r/w	r/w
Function	High Byte							
Default Value	0	0	0	0	0	1	0	0
Bit Position	7	6	5	4	3	2	1	0
Access	r/w	r/w	r/w	r/w	r/w	r/w	r/w	r/w
Function	Low Byte							
Default Value	0	1	1	0	1	0	1	0

© 2016 Bel Power Solutions & Protection

SUMMARY OF SUPPORTED PMBUS COMMANDS(CONTINUED)

Hex Code	Command	Brief Description	Non-Volatile Memory Storage
5F	POWER_GOOD_OFF	Sets the output voltage level at which the PGOOD pin is de-asserted low. Exponent is fixed at -10.	YES

Format	Linear, two's complement binary							
Bit Position	7	6	5	4	3	2	1	0
Access	r	r/w	r/w	r/w	r/w	r/w	r/w	r/w
Function	High Byte							
Default Value	0	0	0	0	0	1	0	0
Bit Position	7	6	5	4	3	2	1	0
Access	r/w	r/w	r/w	r/w	r/w	r/w	r/w	r/w
Function	Low Byte							
Default Value	0	1	0	1	0	0	1	0

Hex Code	Command	Brief Description	Non-Volatile Memory Storage
61	TON_RISE	Sets the rise time of the output voltage during startup	YES

Format	Linear, two's complement binary							
Bit Position	7	6	5	4	3	2	1	0
Access	r	r	r	r	r	r	r	r/w
Function	Exponent					Mantissa		
Default Value	1	1	1	0	0	0	0	0
Bit Position	7	6	5	4	3	2	1	0
Access	r/w	r/w	r/w	r/w	r/w	r/w	r/w	r/w
Function	Mantissa							
Default Value	0	0	1	0	1	0	1	0

Hex Code	Command	Brief Description
78	STATUS_BYTE	Returns one byte of information with a summary of the most critical module faults

Format	Unsigned Binary							
Bit Position	7	6	5	4	3	2	1	0
Access	r	r	r	r	r	r	r	r
Flag	X	OFF	VOUT_OV	IOUT_OC	VIN_UV	TEMP	CML	OTHER
Default Value	0	0	0	0	0	0	0	0

Hex Code	Command	Brief Description
79	STATUS_WORD	Returns two bytes of information with a summary of the module's fault/warning conditions

Format	Unsigned Binary							
Bit Position	7	6	5	4	3	2	1	0
Access	r	r	r	r	r	r	r	r
Flag	VOUT	IOUT_OC	X	X	PGOOD	X	X	X
Default Value	0	0	0	0	0	0	0	0
Bit Position	7	6	5	4	3	2	1	0
Access	r	r	r	r	r	r	r	r
Flag	X	OFF	VOUT_OV	IOUT_OC	VIN_UV	TEMP	CML	OTHER
Default Value	0	0	0	0	0	0	0	0

Hex Code	Command	Brief Description
7A	STATUS_VOUT	Returns one byte of information with the status of the module's output voltage related faults

Format	Unsigned Binary							
Bit Position	7	6	5	4	3	2	1	0
Access	r	r	r	r	r	r	r	r
Flag	VOUT_OV	X	X	VOUT_UV	X	X	X	X
Default Value	0	0	0	0	0	0	0	0

Hex Code	Command	Brief Description
7B	STATUS_IOUT	Returns one byte of information with the status of the module's output current related faults

Format	Unsigned Binary							
Bit Position	7	6	5	4	3	2	1	0
Access	r	r	r	r	r	r	r	r
Flag	IOUT_OC	X	IOUT_OC_WARN	X	X	X	X	X
Default Value	0	0	0	0	0	0	0	0

SUMMARY OF SUPPORTED PMBUS COMMANDS(CONTINIUED)

Hex Code	Command	Brief Description	Non-Volatile Memory Storage
7D	STATUS_TEMPERATURE	Returns one byte of information with the status of the module's temperature related faults	

Format	Unsigned Binary							
Bit Position	7	6	5	4	3	2	1	0
Access	r	r	r	r	r	r	r	r
Flag	OT_FAULT	OT_WARN	X	X	X	X	X	X
Default Value	0	0	0	0	0	0	0	0

Hex Code	Command	Brief Description	Non-Volatile Memory Storage
7E	STATUS_CML	Returns one byte of information with the status of the module's communication related faults	

Format	Unsigned Binary							
Bit Position	7	6	5	4	3	2	1	0
Access	r	r	r	r	r	r	r	r
Flag	Invalid Command	Invalid Data	PEC Fail	X	X	X	Other Comm Fault	X
Default Value	0	0	0	0	0	0	0	0

Hex Code	Command	Brief Description	Non-Volatile Memory Storage
88	READ_VIN	Returns the value of the input voltage applied to the module	

Format	Linear, two's complement binary							
Bit Position	7	6	5	4	3	2	1	0
Access	r	r	r	r	r	r	r	r
Function	Exponent					Mantissa		
Default Value	1	1	0	1	1	0	0	0
Bit Position	7	6	5	4	3	2	1	0
Access	r	r	r	r	r	r	r	r
Function	Mantissa							
Default Value	0	0	0	0	0	0	0	0

Hex Code	Command	Brief Description	Non-Volatile Memory Storage
8B	READ_VOUT	Returns the value of the output voltage of the module. Exponent is fixed at -10.	

Format	Linear, two's complement binary							
Bit Position	7	6	5	4	3	2	1	0
Access	r	r	r	r	r	r	r	r
Function	Mantissa							
Default Value	0	0	0	0	0	0	0	0
Bit Position	7	6	5	4	3	2	1	0
Access	r	r	r	r	r	r	r	r
Function	Mantissa							
Default Value	0	0	0	0	0	0	0	0

Hex Code	Command	Brief Description	Non-Volatile Memory Storage
8C	READ_IOUT	Returns the value of the output current of the module	

Format	Linear, two's complement binary							
Bit Position	7	6	5	4	3	2	1	0
Access	r	r	r	r	r	r	r	r
Function	Exponent					Mantissa		
Default Value	1	1	1	0	0	0	0	0
Bit Position	7	6	5	4	3	2	1	0
Access	r	r	r	r	r	r	r	r
Function	Mantissa							
Default Value	0	0	0	0	0	0	0	0

Hex Code	Command	Brief Description	Non-Volatile Memory Storage
98	PMBUS_REVISION	Returns one byte indicating the module is compliant to PMBus Spec. 1.1 (read only)	YES

Format	Unsigned Binary							
Bit Position	7	6	5	4	3	2	1	0
Access	r	r	r	r	r	r	r	r
Default Value	0	0	0	1	0	0	0	1

© 2016 Bel Power Solutions & Protection

SUMMARY OF SUPPORTED PMBUS COMMANDS(CONTINIUED)

Hex Code	Command	Brief Description	Non-Volatile Memory Storage
A0	MFR_VIN_MIN	Returns the minimum input voltage the module is specified to operate at (read only)	YES
A4	MFR_VOUT_MIN	Returns the minimum output voltage possible from the module (read only)	YES
D0	MFR_SPECIFIC_00	Returns module name information (read only)	YES
D4	VOUT_CAL_OFFSET	Applies an offset to the READ_VOUT command results to calibrate out offset errors in module measurements of the output voltage (between -125mV and +124mV). Exponent is fixed at -10.	YES
D5	VOUT_CAL_GAIN	Applies a gain correction to the READ_VOUT command results to calibrate out gain errors in module measurements of the output voltage (between -0.125 and 0.121)	YES

A0 — MFR_VIN_MIN

Format	Linear, two's complement binary							
Bit Position	7	6	5	4	3	2	1	0
Access	r	r	r	r	r	r	r	r
Function	Exponent					Mantissa		
Default Value	1	1	1	1	0	0	0	0
Bit Position	7	6	5	4	3	2	1	0
Access	r	r	r	r	r	r	r	r
Function	Mantissa							
Default Value	0	0	0	0	1	1	0	0

A4 — MFR_VOUT_MIN

Format	Linear, two's complement binary							
Bit Position	7	6	5	4	3	2	1	0
Access	r	r	r	r	r	r	r	r
Function	Mantissa							
Default Value	0	0	0	0	0	0	1	0
Bit Position	7	6	5	4	3	2	1	0
Access	r	r	r	r	r	r	r	r
Function	Mantissa							
Default Value	0	1	1	0	0	1	1	0

D0 — MFR_SPECIFIC_00

Format	Unsigned Binary							
Bit Position	7	6	5	4	3	2	1	0
Access	r	r	r	r	r	r	r	r
Function	Reserved							
Default Value	0	0	0	0	0	0	0	0
Bit Position	7	6	5	4	3	2	1	0
Access	r	r	r	r	r	r	r	r
Function	Module Name						Reserved	
Default Value	0	0	0	0	0	0	1	0

D4 — VOUT_CAL_OFFSET

Format	Linear, two's complement binary							
Bit Position	7	6	5	4	3	2	1	0
Access	r/w	r	r	r	r	r	r	r
Function	Mantissa							
Default Value	V	0	0	0	0	0	0	0
Bit Position	7	6	5	4	3	2	1	0
Access	r	r/w	r/w	r/w	r/w	r/w	r/w	r/w
Function	Mantissa							
Default Value	V	V	V	V	V	V	V	V

D5 — VOUT_CAL_GAIN

Format	Linear, two's complement binary							
Bit Position	7	6	5	4	3	2	1	0
Access	r	r	r	r	r	r/w	r	r
Function	Exponent					Mantissa		
Default Value	1	1	0	0	0	0	0	V
Bit Position	7	6	5	4	3	2	1	0
Access	r	r	r	r/w	r/w	r/w	r/w	r/w
Function	Mantissa							
Default Value	V	V	V	V	V	V	V	V

SUMMARY OF SUPPORTED PMBUS COMMANDS(CONTINIUED)

Hex Code	Command	Brief Description	Non-Volatile Memory Storage
D6	VIN_CAL_OFFSET	Applies an offset correction to the READ_VIN command results to calibrate out offset errors in module measurements of the input voltage (between -2V and +1.968V)	YES
D7	VIN_CAL_GAIN	Applies a gain correction to the READ_VIN command results to calibrate out gain errors in module measurements of the input voltage (between -0.125 and 0.121)	YES

D6 — VIN_CAL_OFFSET

Format	Linear, two's complement binary							
Bit Position	7	6	5	4	3	2	1	0
Access	r	r	r	r	r	r/w	r	r
Function	Exponent					Mantissa		
Default Value	1	1	0	1	V	0	0	V
Bit Position	7	6	5	4	3	2	1	0
Access	r	r	r/w	r/w	r/w	r/w	r/w	r/w
Function	Mantissa							
Default Value	0	0	V	V	V	V	V	V

D7 — VIN_CAL_GAIN

Format	Linear, two's complement binary							
Bit Position	7	6	5	4	3	2	1	0
Access	r	r	r	r	r	r/w	r	r
Function	Exponent					Mantissa		
Default Value	1	1	0	0	V	0	0	V
Bit Position	7	6	5	4	3	2	1	0
Access	r	r	r	r/w	r/w	r/w	r/w	r/w
Function	Mantissa							
Default Value	0	0	0	V	V	V	V	V

© 2016 Bel Power Solutions & Protection

56. THERMAL CONSIDERATIONS

The SLDN-12D1Ax power modules operate in a variety of thermal environments; however, sufficient cooling should always be provided to help ensure reliable operation.

Considerations include ambient temperature, airflow, module power dissipation, and the need for increased reliability. A reduction in the operating temperature of the module will result in an increase in reliability. The thermal data presented here is based on physical measurements taken in a wind tunnel. The test set-up is shown in Figure 49. The preferred airflow direction for the module is in Figure 50.

Figure 49

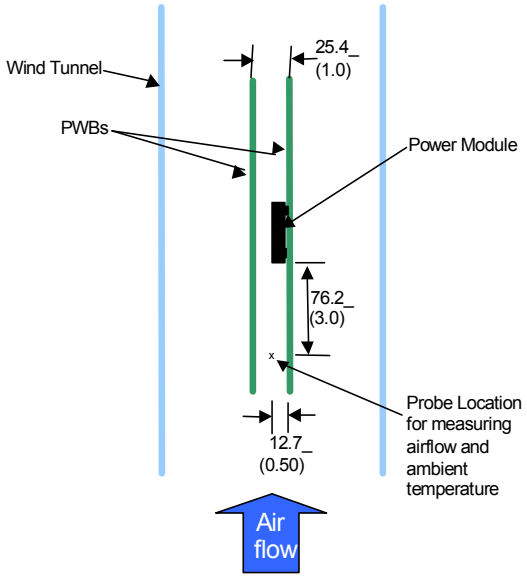

Thermal Test Setup

The thermal reference points, Tref used in the specifications are also shown in Figure 50. For reliable operation the temperatures at these points should not exceed 120°C. The output power of the module should not exceed the rated power of the module (Vo,set x Io,max)

Please refer to the Application Note "Thermal Characterization Process For Open-Frame Board-Mounted Power Modules" for a detailed discussion of thermal aspects including maximum device temperatures.

Figure 50

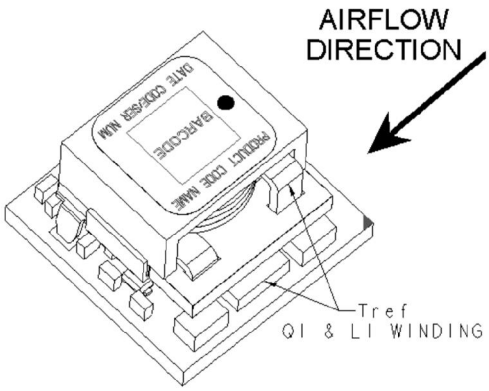

Preferred airflow direction and location of hot-spot of the module (Tref).

57. EXAMPLE APPLICATION CIRCUIT

Requirements:

Vin:	12V
Vout:	1.8V
Iout:	9A max., worst case load transient is from 6A to 9A
ΔVout:	1.5% of Vout (27mV) for worst case load transient
Vin, ripple	1.5% of Vin (180mV, p-p)

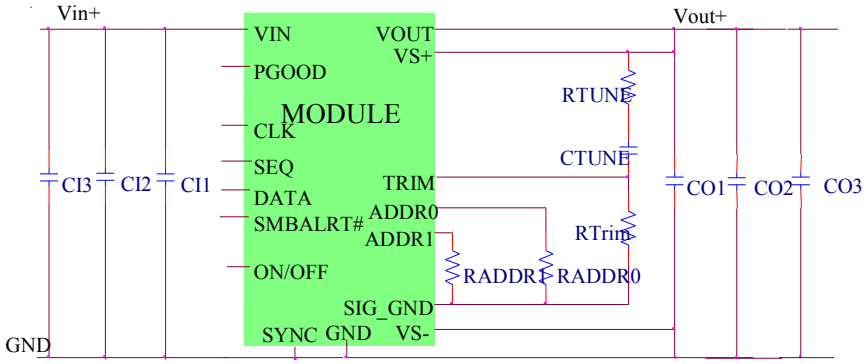

CI1 Decoupling cap - 1x0.047µF/16V ceramic capacitor (e.g. Murata LLL185R71C473MA01)
CI2 2x22µF/16V ceramic capacitor (e.g. Murata GRM32ER61C226KE20)
CI3 470µF/16V bulk electrolytic
CO1 Decoupling cap - 1x0.047µF/16V ceramic capacitor (e.g. Murata LLL185R71C473MA01)
CO2 2 x 47µF/6.3V ceramic capacitor (e.g. Murata GRM31CR60J476ME19)
CO3 1 x 330µF/6.3V Polymer (e.g. Sanyo Poscap)
CTune 3300pF ceramic capacitor (can be 1206, 0805 or 0603 size)
RTune 270 ohms SMT resistor (can be 1206, 0805 or 0603 size)
RTrim 10kΩ SMT resistor (can be 1206, 0805 or 0603 size, recommended tolerance of 0.1%)

Note: The DATA, CLK and SMBALRT pins do not have any pull-up resistors inside the module. Typically, the SMBus master controller will have the pull-up resistors as well as provide the driving source for these signals.

© 2016 Bel Power Solutions & Protection

58. MECHANICAL DIMENSIONS

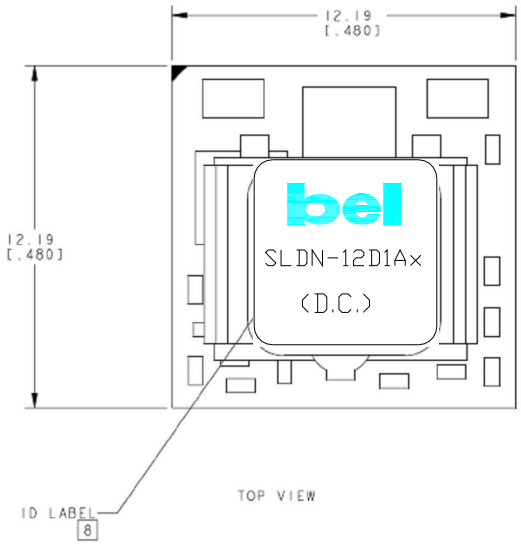

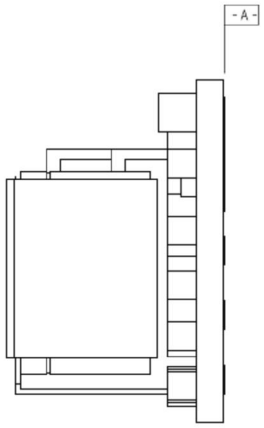

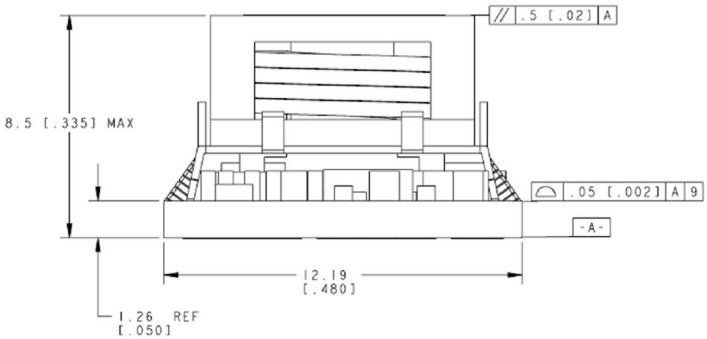

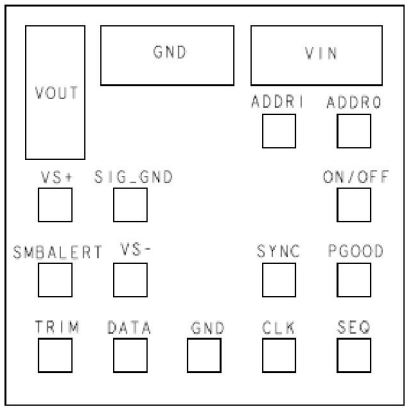

BOTTOM VIEW

PIN CONNECTIONS

PIN	FUNCTION
1	ON/OFF
2	VIN
3	GND
4	VOUT
5	SENSE
6	TRIM
7	GND
8	CLK
9	SEQ
10	PGOOD
11	SYNC[1]
12	VS-
13	SIG. GND
14	SMBALERT
15	DATA
16	ADDR0
17	ADDR1

MECHANICAL DIMENSIONS (continued)

Recommended Pad Layout

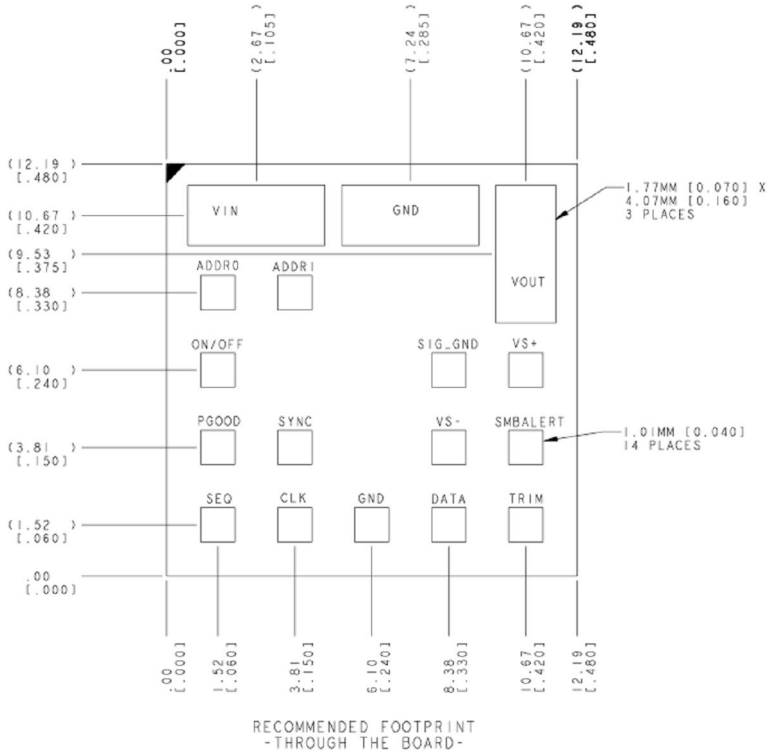

Dimensions are in millimeters and (inches).
Tolerances: x.x mm ± 0.5 mm (x.xx in. ± 0.02 in.) [unless otherwise indicated]
x.xx mm ± 0.25 mm (x.xxx in ± 0.010 in.)

Note: This module is recommended and compatible with Pb-Free Reflow Soldering and must be soldered using a reflow profile with a peak temperature of no more than 260 ºC for less than 5 seconds.

© 2016 Bel Power Solutions & Protection

59. PACKAGING DETAILS

The SLDN-12D1Ax modules are supplied in tape & reel as standard.

All Dimensions are in millimeters and (in inches).

.

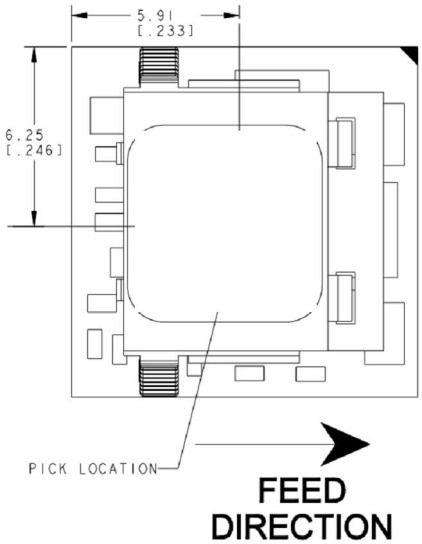

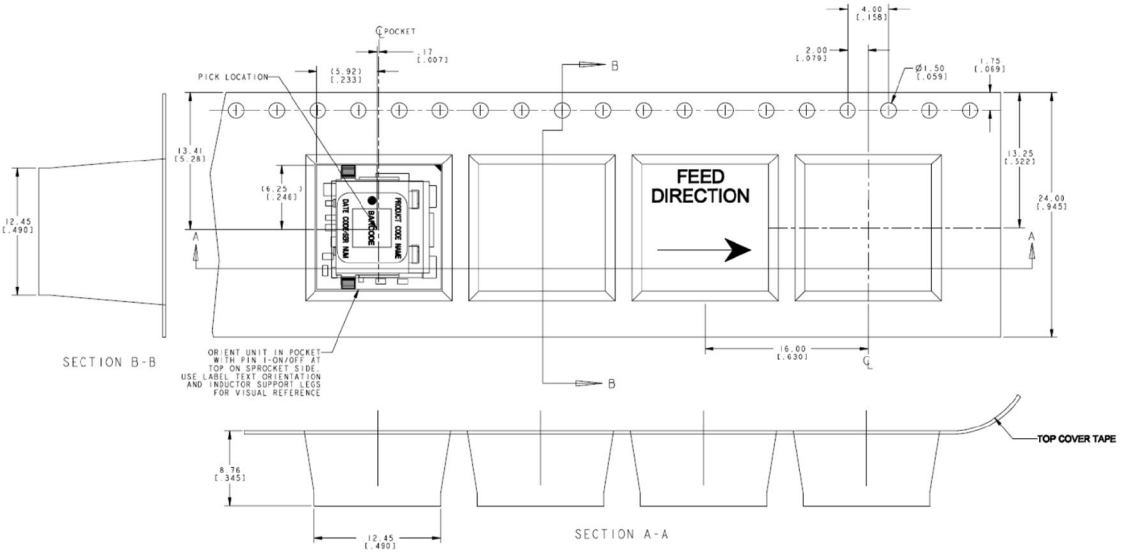

Reel Dimensions:

Outside Dimensions:	330.2 mm (13.00)
Inside Dimensions:	177.8 mm (7.00”)
Tape Width:	24.00 mm (0.945”)

60. SURFACE MOUNT INFORMATION

Pick and Place

The SLDN-12D1Ax modules use an open frame construction and are designed for a fully automated assembly process. The modules are fitted with a label designed to provide a large surface area for pick and place operations. The label meets all the requirements for surface mount processing, as well as safety standards, and is able to withstand reflow temperatures of up to 300oC. The label also carries product information such as product code, serial number and the location of manufacture.

Nozzle Recommendations

The SLDN-12D1Ax module weight has been kept to a minimum by using open frame construction. Variables such as nozzle size, tip style, vacuum pressure and placement speed should be considered to optimize this process. The minimum recommended inside nozzle diameter for reliable operation is 3mm. The maximum nozzle outer diameter, which will safely fit within the allowable component spacing, is 7 mm.

Bottom Side / First Side Assembly

This SLDN-12D1Ax module is not recommended for assembly on the bottom side of a customer board. If such an assembly is attempted, components may fall off the module during the second reflow process.

Lead Free Soldering

The SLDN-12D1Ax modules are lead-free (Pb-free) and RoHS compliant and fully compatible in a Pb-free soldering process. Failure to observe the instructions below may result in the failure of or cause damage to the modules and can adversely affect long-term reliability.

Pb-free Reflow Profile

Power Systems will comply with J-STD-020 Rev. C (Moisture/Reflow Sensitivity Classification for Nonhermetic Solid State Surface Mount Devices) for both Pb-free solder profiles and MSL classification procedures. This standard provides a recommended forced-air-convection reflow profile based on the volume and thickness of the package (table 4-2). The suggested Pb-free solder paste is Sn/Ag/Cu (SAC). The recommended linear reflow profile using Sn/Ag/Cu solder is shown in Fig. 50. Soldering outside of the recommended profile requires testing to verify results and performance.

MSL Rating

The SLDN-12D1Ax modules have a MSL rating of 2A.

© 2016 Bel Power Solutions & Protection

SURFACE MOUNT INFORMATION(CONTINIUED)

Storage and Handling

The recommended storage environment and handling procedures for moisture-sensitive surface mount packages is detailed in J-STD-033 Rev. A (Handling, Packing, Shipping and Use of Moisture/Reflow Sensitive Surface Mount Devices). Moisture barrier bags (MBB) with desiccant are required for MSL ratings of 2 or greater. These sealed packages should not be broken until time of use. Once the original package is broken, the floor life of the product at conditions of ≤ 30°C and 60% relative humidity varies according to the MSL rating (see J-STD-033A). The shelf life for dry packed SMT packages will be a minimum of 12 months from the bag seal date, when stored at the following conditions: < 40° C, < 90% relative humidity.

Figure51

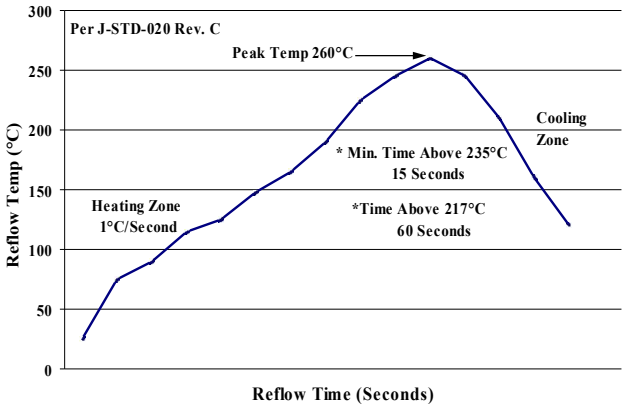

Recommended linear reflow profile using Sn/Ag/Cu solder.

Post Solder Cleaning and Drying Considerations

Post solder cleaning is usually the final circuit-board assembly process prior to electrical board testing. The result of inadequate cleaning and drying can affect both the reliability of a power module and the testability of the finished circuit-board assembly. For guidance on appropriate soldering, cleaning and drying procedures, refer to Board Mounted Power Modules: Soldering and Cleaning Application Note (AN04-001).

For more information on these products consult: tech.support@psbel.com

NUCLEAR AND MEDICAL APPLICATIONS - Products are not designed or intended for use as critical components in life support systems, equipment used in hazardous environments, or nuclear control systems.
TECHNICAL REVISIONS - The appearance of products, including safety agency certifications pictured on labels, may change depending on the date manufactured. Specifications are subject to change without notice.

bel POWER SOLUTIONS & PROTECTION
a bel group

Asia-Pacific +86 755 298 85888
Europe, Middle East +353 61 225 977
North America +1 408 785 5200

© 2016 Bel Power Solutions & Protection