P/N	INTERFACE(S)	(Ø A)	(B)	FIGURE(S)
-1CC	FULL DETENT	(.116)	.075	1
-2CC	LIMITED DETENT	(.120)	.075	1
-3CC	SMOOTH BORE	(.125)	.075	1
-4CC	CATCHER'S MITT	(.125)	.075	2
-5CC	FULL DETENT	(.116)	.140	1
-6CC	LIMITED DETENT	(.120)	.140	1
-7CC	SMOOTH BORE	(.125)	.140	1
-8CC	CATCHER'S MITT	(.125)	.140	2

REVISIONS			
REV	DESCRIPTION	DATE	BY
G	ECO 13311	05.10.01	ATV
H	ECO 20084	03.26.07	DKN
J	ECO 25581	04.19.12	DKN

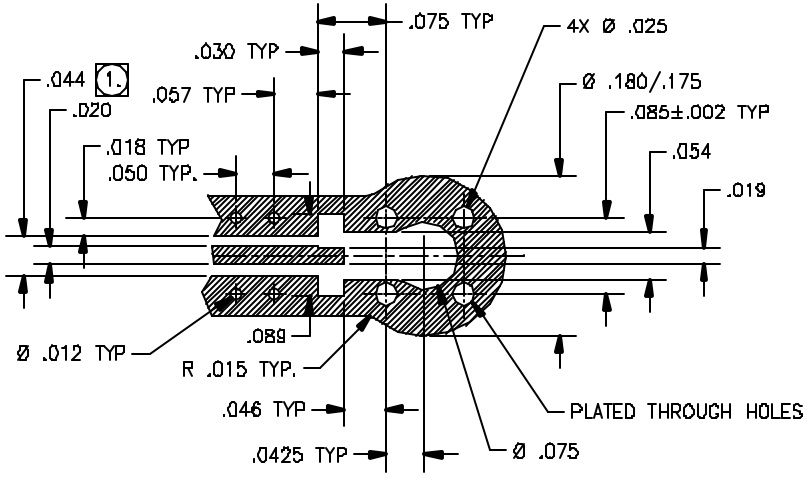

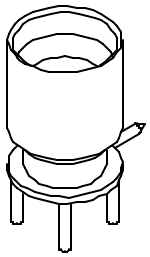

MOUNTING HOLE PATTERN

1. DIMENSIONS SHOWN ARE FOR ROGERS 4350 PCB MATERIAL. THESE DIMENSIONS MAY VARY DEPENDING ON PCB MATERIAL USED.

MATERIAL:

Body:
BeCu alloy per ASTM B-196.
Center Conductor:
Brass alloy per ASTM B-16.
Insulator:
Torlon per AMS 3670
or ASTM D-5204.

ELECTRICAL:

Impedance: 50 Ohms nominal.
Frequency Range: DC to 18 GHz.
VSWR: 1.15:1 max to 18 GHz.
Insertion Loss: .10 dB max to 18 GHz.
Working Voltage: 335 Vrms max @ sea level.
Dielectric Withstanding Voltage: 500 Vrms min.
R.F. HiPot Voltage: 325 Vrms min @ 5MHz.
Corona Level: 125 Vrms @ 70,000 ft.
Insulation Resistance: 5000 MegOhms min.
Contact Resistance:
Center Contact: 6.0 Milliohm max.
Outer Contact: 2.0 Milliohm max.

MECHANICAL:

Mating Characteristics:
Interface per Mil-Std-348.
Force To Engage & Disengage:
Engage:
Full detent: 10.0 lbs max
Limited detent: 5.0 max
Smooth bore/Catchers mitt: 2.0 lbs max
Disengage:
Full detent: 2.0 lbs min
Limited detent: 1.5 lbs min
Smooth bore/Catchers mitt: .50 lbs min
Center Contact Retention:
Axial Force: 1.5 pounds min.
Radial Torque: NA
Connector Durability:
Depend on detent

ENVIRONMENTAL:

Temperature Range: -65°C to +165°C.
Thermal Shock:
Mil-Std-202, Method 107, Test Cond. B.
Moisture Resistance:
Mil-Std-202, Method 106, except step 7b shall be omitted. Insulation resistance at least 1000 MegOhms within 5 minutes after removal from humidity.
Corrosion:
Mil-Std-202, Method 101, Test Cond. B.
Vibration:
Mil-Std-202, Method 204, Test Cond. D.
Shock:
Mil-Std-202, Method 213, Test Cond. I.

FINISH:

Body & Center Conductor:
Gold plate per ASTM B-488, over nickel under plate per AMS-QQ-N-290.

APPLICABLE CARLISLE IT DOCUMENTS

WORK STD	PROD INST	ASSY INST
NA	NA	NA

NOTICE
THIS DRAWING CONTAINS A CONFIDENTIAL, PROPRIETARY DESIGN DEVELOPED BY CARLISLE INTERCONNECT TECHNOLOGIES AND ALL RIGHTS, INCLUDING REPRODUCTION, USE AND SALE RIGHTS REGARDING THE SAME ARE EXPRESSLY RESERVED. IT IS SUBMITTED UNDER A CONFIDENTIAL RELATIONSHIP FOR A SPECIFIC PURPOSE AND THE RECEIPT ACCEPTS BY ACCEPTING THE DRAWING NOT TO COPY OR DISCLOSE ANY INFORMATION CONTAINED IT TO ANY UNAUTHORIZED PERSON ITS INDEPENDENT WORKS PRODUCED ANY SERIAL FEATURE PECULIAR TO THE DESIGN. ALL RIGHTS NOTED HEREIN ARE EXPRESSLY RESERVED BY CARLISLE INTERCONNECT TECHNOLOGIES, CORONA, CA 92878

TOLERANCES AND NOTES
EXCEPT AS NOTED
DIMENSIONS ARE IN INCHES.
LINEAR .XX ±.010 .XXX ±.005 ANGULAR ± 1/2
FRACTIONS ± 1/32
1. MACHINE FINISH: 63 √ RMS
2. BREAK ALL SHARP EDGES .005 MAX.
3. MACHINED FILLETS .015 MAX.
4. MACHINED SURFACES SQUARE TO REFERENCE AND WITHIN .005 EXCEPT PCB MATL.
5. MACHINED DIAMETERS CONCENTRIC WITHIN .005 T.I.R.
6. DIMENSIONS TO BE NOT BEFORE PLATING.
7. SHAMPOT ALL THREADS 45°.
8. THREADS PER H-28.
9. REMOVE STAMPED EDGES ON TEFLON.
10. REMOVE ALL BURRS.

MATERIAL		
APPROVAL INITIALS		DATE
DRAWN BY	DKN	08.10.88
CHECKED BY	PNAO	04.19.12
TEST ENGR		
QUALITY		
DESIGN ENGR	JCB	03.26.07
MFG ENGR		
ECO APPRV	PNAO	04.19.12

-	-	-
SPECIFICATION		PROCUREMENT

CARLISLE Interconnect Technologies Corona, CA 92878

TITLE
SMP MALE STRAIGHT
PCB SURFACE MOUNT

SCALE 15:1 | INVENTORY/NEG-DIRECTORY _OLP\ | SHEET 1 OF 2

SIZE C | DASC CODE 30990 | DRAWING NO. P797 | REV. J

ENG-DWG REV. E

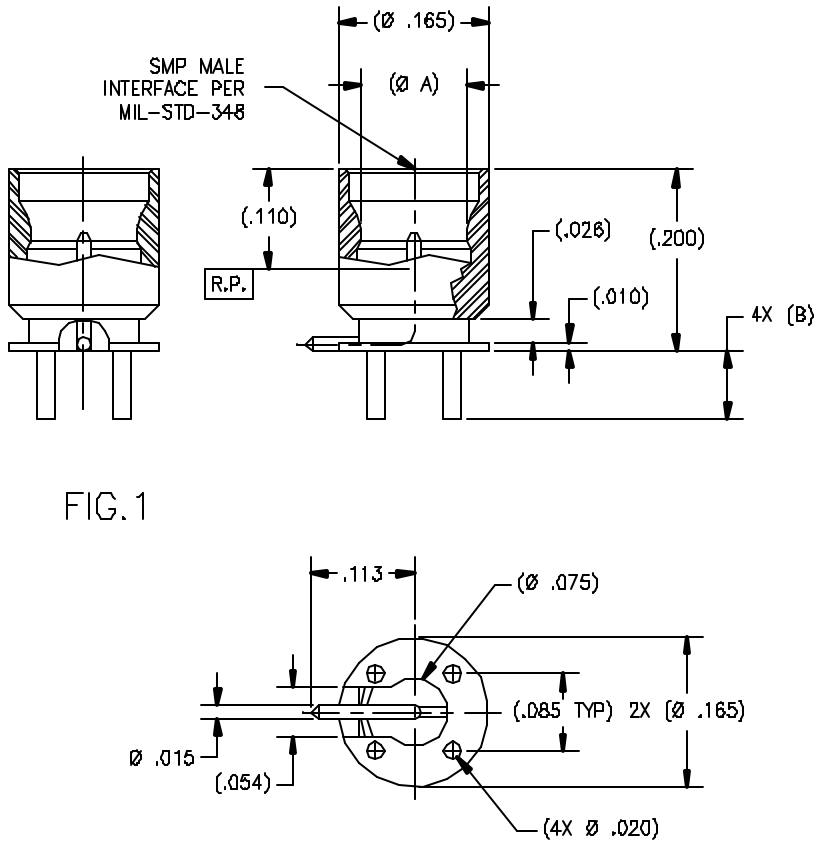

FIG.1

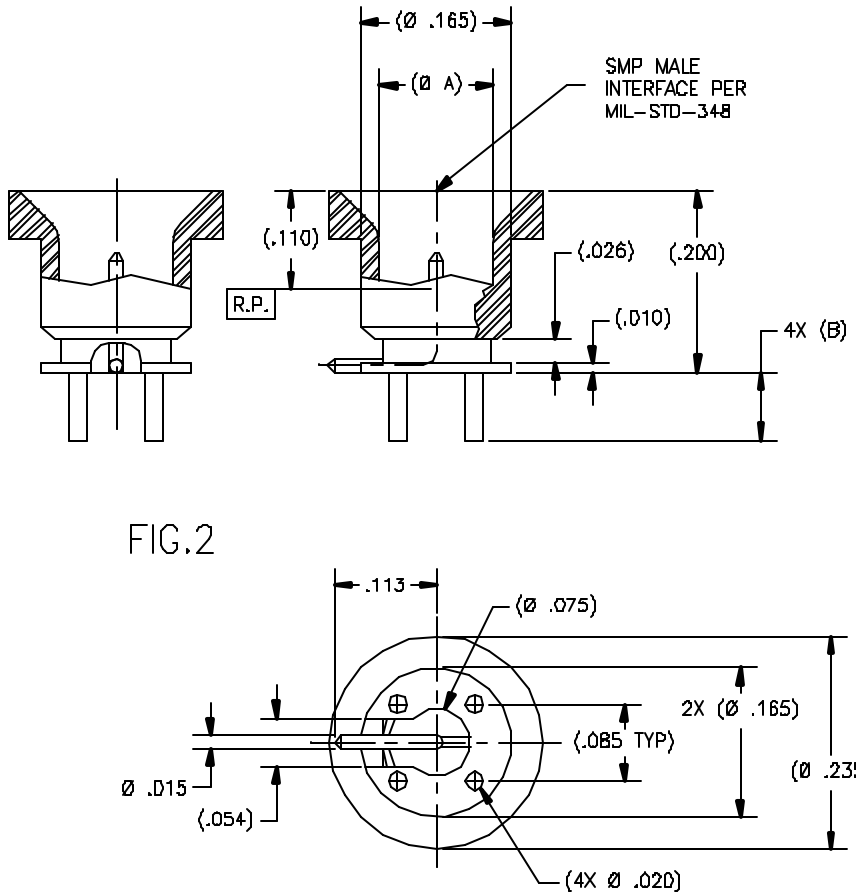

FIG.2

SCALE	DIRECTORY\SUB-DIRECTORY	SHEET 2 OF 2
NONE	_OLP\	
SIZE C	FSCM NO. 30990	DRAWING NO. P797	REV. J

ENG-DWG REV. E