MLX90818

Absolute Pressure Sensor

1. Features and Benefits

- High accuracy absolute pressure sensor ±0.5% to ±0.75% for extended life operation at 150°C
- Digital SENT output with available compensated ±1°C accurate NTC temperature information
- System in a package: MEMS, analog front end circuitry, 16 bit microcontroller, voltage regulators, SENT driver
- Large automotive temperature range (-40°C to 150°C)
- Excellent harsh media compliance
- Automotive qualified and automotive diagnostic features (clamping levels, multiple internal fault diagnostics)
- Factory calibrated or fully programmable through the connector for customized calibration curves at customers
- Assembled in a rugged easy to use 4x5mm DFN package

2. Application Examples

- Automotive applications with absolute pressure from 1bar to 5.5bar
- Manifold and Turbo Manifold Air Pressure
- Manifold and Turbo Manifold Air Pressure combined with Temperature

3. Ordering information

Product Code	Temperature Code	Package Code	Option Code	Packing Form Code
MLX90818	L	XE	BAE-015	RE
MLX90818	L	XE	BAE-016	RE
MLX90818	L	XE	BAE-017	RE

Legend:

Temperature Code: L (-40°C to 150°C)

Package Code: XE = DFN14

Option Code: BAE-015 = 0.1 to 4bar absolute pressure / 193 to 3896LSB SENT output / no NTC
BAE-016 = 0.1 to 3bar absolute pressure / 193 to 3896LSB SENT output / NTC
BAE-017 = 0.1 to 4bar absolute pressure / 193 to 3896LSB SENT output / NTC

Packing Form: RE = Reel

Ordering example: MLX90818LXE-BAE-015-RE

4. Functional Diagram

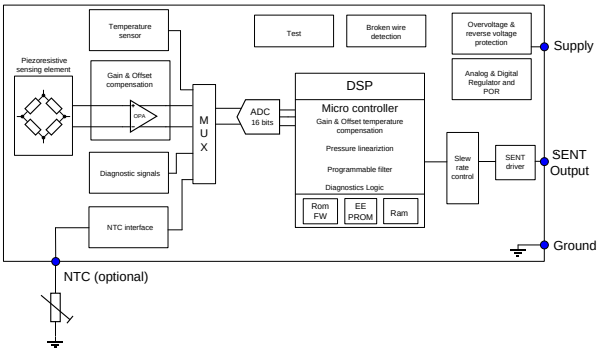

Figure 1: Functional block diagram

5. General Description

The MLX90818 is a packaged, factory calibrated, absolute pressure sensor delivering a digital output signal using the SENT protocol.
Use of an optimized architecture and a high density CMOS technology imparts the MLX90818 with best in class automotive EMC performance.
A DSP based architecture using a 16bit microcontroller provides outstanding performance in terms of initial accuracy.
A smart package and die assembly concept suits applications with stringent automotive temperature and stress conditions needing small drift over life.

Contents

1. Features and Benefits 1
2. Application Examples 1
3. Ordering information 1
4. Functional Diagram 2
5. General Description 2
6. Glossary of Terms 4
7. Absolute Maximum Ratings 4
8. Pin Definitions and Descriptions 5
9. General Electrical Specifications 6
10. Detailed General Description 7
11. Default programmed settings 8
11.1. MLX90818LXE-BAE-015 10
11.2. MLX90818LXE-BAE-016 11
11.3. MLX90818LXE-BAE-017 12
12. Filters 13
12.1. PFLT 13
12.2. SSF 13
13. Analog Front End 15
14. ADC 17
15. Digital 17
16. NTC Temperature Linearization 18
17. SENT Configuration 19
17.1. Fast Channel Configuration 19
17.2. Slow Channel Configuration 20
18. Wrong Connections Overview 25
19. Diagnostics 26
19.1. Input Diagnostics 26
19.2. Diagnostic Sources 26
19.3. Fast and Slow Channel Diagnostics 27
20. Timings 32

21. Application Information 33
22. Standard information regarding manufacturability of Melexis products with different soldering processes 34
23. ESD Precautions 34
24. Package Information 35
25. PCB Land Pattern Recommendation 36
26. Contact 37
27. Disclaimer 37

6. Glossary of Terms

Bar: Pressure unit (1bar = 100kPa)
POR: Power-on Reset
ADC: Analog to Digital Converter
DSP: Digital Signal Processor
EMC: Electro Magnetic Compatibility
SENT: Single Edge Nibble Transmission
OV: Over Voltage
UV: Under Voltage
FC: SENT Fast Channel
FC1: SENT Fast Channel 1
FC2: SENT Fast Channel 2

7. Absolute Maximum Ratings

Parameter	Value	Units
Supply Voltage (overvoltage)	18	V
Reverse Voltage Protection	-18	V
Positive output voltage	18	V
Reverse output voltage	-18	V
Operating Temperature Range	-40 to 150	°C
Storage Temperature Range	-40 to 150	°C
Programming Temperature Range	-40 to 125	°C
Burst pressure (Room Temperature)	15	Bar

Table 1: Absolute maximum ratings

Exceeding the absolute maximum ratings may cause permanent damage. Exposure to absolute-maximum-rated conditions for extended periods may affect device reliability.

8. Pin Definitions and Descriptions

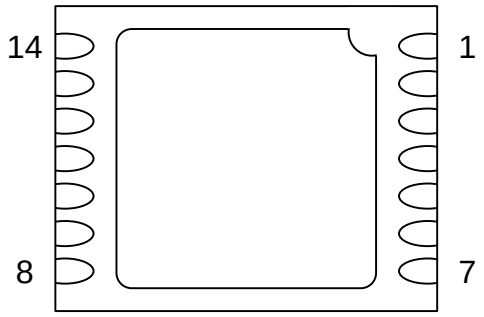

Figure 2: Package pinout (bottom view)

Pin number	Description	Pin number	Description
1	Test pin	14	Ground
2	Not Connected	13	Not Connected
3	SENT output	12	NTC input
4	Not Connected	11	Not Connected
5	Test pin	10	Ground
6	Not Connected	9	Not Connected
7	Supply input	8	NTC input

Table 2: Pinout definitions and descriptions

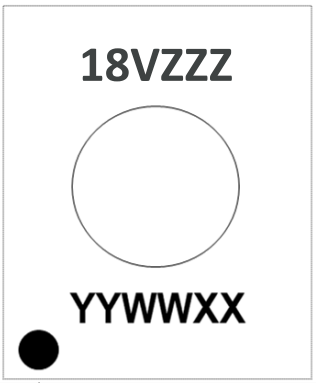

Figure 3: Package marking (top view)

Symbol	Function / Description
V	MEMS and ASIC traceability letter
ZZZ	Last 3 digits of ASIC lot number
YY	Year of assembly
WW	Calendar week of assembly
XX	Last 2 digits of the sensor wafer lot #

Table 3: Package marking definition

9. General Electrical Specifications

DC Operating Parameters T_A = -40°C to 150°C

Parameter	Symbol	Remarks	Min	Typ[1]	Max	Units
Nominal supply voltage	Vdd		4.5	5	5.5	V
Nominal supply current	Idd	No output load, no NTC connected		8.3	9.5	mA
Decoupling capacitor on supply				100		nF
Supply series resistor		Not mandatory but recommended for optimal EMC performance	0	10	27	Ohm
Capacitive load on output		Pure capacitive load		2.2	10	nF
		CRC load circuit (C close to device + Series R + C close to connector)		1.1nF + 100Ω + 1.1nF	2.2nF + 220Ω + 2.2nF	
Resistive load on output		Pull-up to Vdd at receiver[2]	10		55	kOhm
Supply programming entry level	Vdd_com	Threshold to enter communication mode	6.2	7	7.8	V
Analog POR level (rising)			3.1	3.5	3.9	V
Analog POR hysteresis			100		500	mV
Digital POR level (rising)			2.05	2.3	2.7	V
Digital POR hysteresis			10		200	mV
Power up time		Time from reaching minimum allowed supply voltage of 4.5V till the first falling edge of the first SENT frame			1.1	msec
Response time[3]		Using default filter setting PFLT = 0 and SSF = 1. Tick time = 3us and Pause Pulse enabled. For other configurations refer to Table 8 in chapter 12.			3	SENT frames
Pressure output noise		Default configuration BAE-015, BAE-016 and BAE-017. Other configurations in Table 9.			3	LSB pk-pk
Sensing element supply voltage	VDDA		-9%	3.5	+9%	V
Sensing element sensitivity				9		mV/V/bar
On chip temperature accuracy		On chip PTAT temperature	-10		+10	°C
ADC resolution				16		Bit
Input voltage range on NTC pin			0		3.5	V

[1] *Typical values are defined at T_A = +25°C and V_{DD} = 5V.*

[2] *As specified in the SENT standard*

[3] *Number of SENT frames between pressure step and settled output (last frame containing stable pressure data)*

Parameter	Symbol	Remarks	Min	Typ[1]	Max	Units
NTC Temperature Output noise					1	LSB pk-pk
NTC Temperature range			-55		200	°C
NTC Temperature response time					100	msec

Table 4: Electrical specifications

10. Detailed General Description

The MLX90818 contains a pressure sensing element which consists of a diaphragm realized in the silicon chip by wafer bonding on an etched cavity with built in reference vacuum. The diaphragm reacts to a change in absolute pressure. The internal strain increases, in particular at the border of the diaphragm. Here, the piezo-resistive elements have been implanted into the silicon diaphragm forming a Wheatstone bridge, which act as a transducer.

The electronics front end amplifies the signal from the bridge, performs a coarse offset compensation and an ADC conversion. The DSP performs the compensations over temperature. Furthermore, the digital circuit provides some filtering, the possibility to linearize the pressure signal and also implements the clamping function. This chip delivers a SENT output compliant with SAE J2716 spec dated April 2016. On one of the fast channels of the SENT message it is possible to select to transmit linearized and calibrated temperature information measured by an external NTC thermistor. An analog interface is available for the external thermistor and the 16bits DSP performs the calibration and linearization of the measured thermistor temperature.

Extensive protection of the supply lines allows the MLX90818 to handle extreme overvoltage conditions and is immune to severe external disturbances. Several diagnostic functions (over-voltage, under-voltage, overpressure, under pressure detections) have been implemented on the 90818 and can be enabled by programming EEPROM settings. Figure 4 describes MLX90818 block diagram.

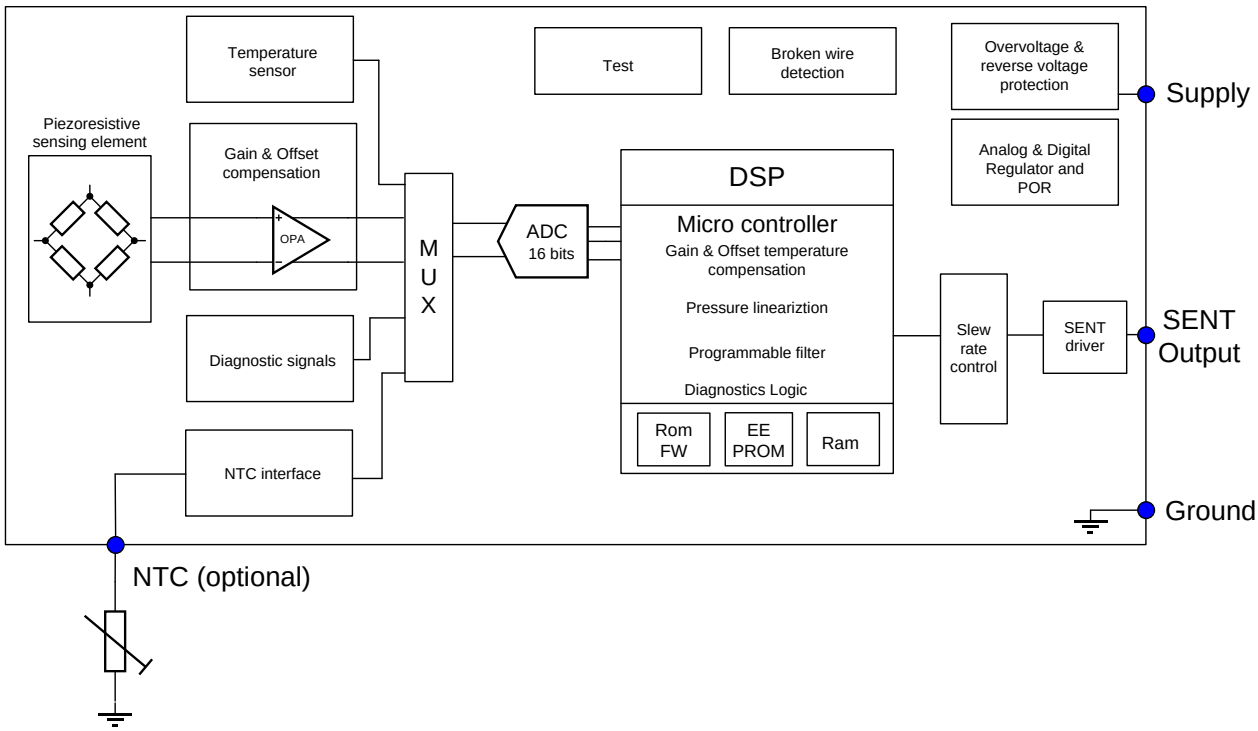

Figure 4: MLX90818 block diagram

11. Default programmed settings

The MLX90818 is calibrated at the final manufacturing test steps. During the calibration, settings are stored in the on chip EEPROM to define the pressure transfer curve. Besides pressure, the internal temperature and optionally the NTC temperature calibrations are performed. The default temperature characteristic can be found in the graph of Figure 5. The SENT parameters and the IC filter values are also configured.

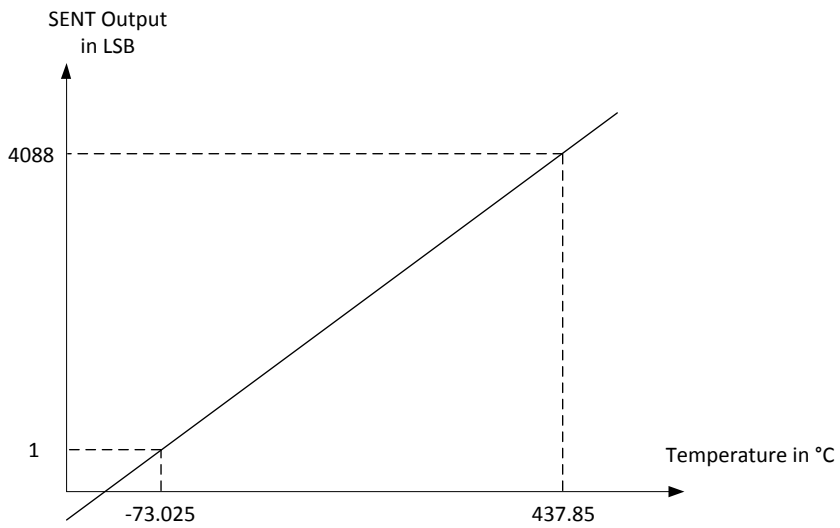

Figure 5: NTC and internal temperature transfer function

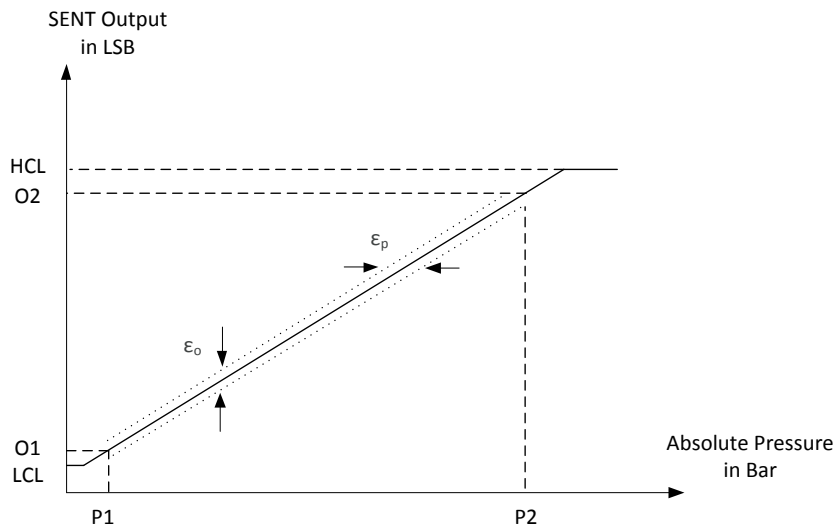

Figure 6: Pressure transfer function description at room temperature

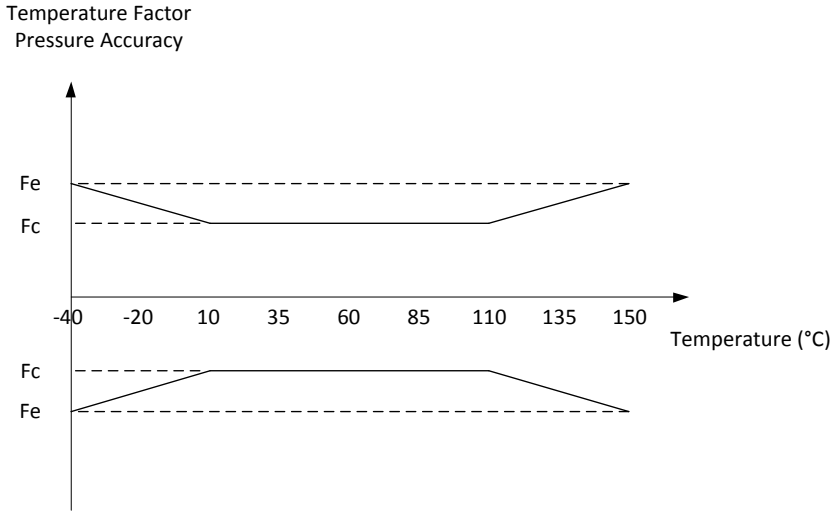

Figure 7: Pressure accuracy temperature factor

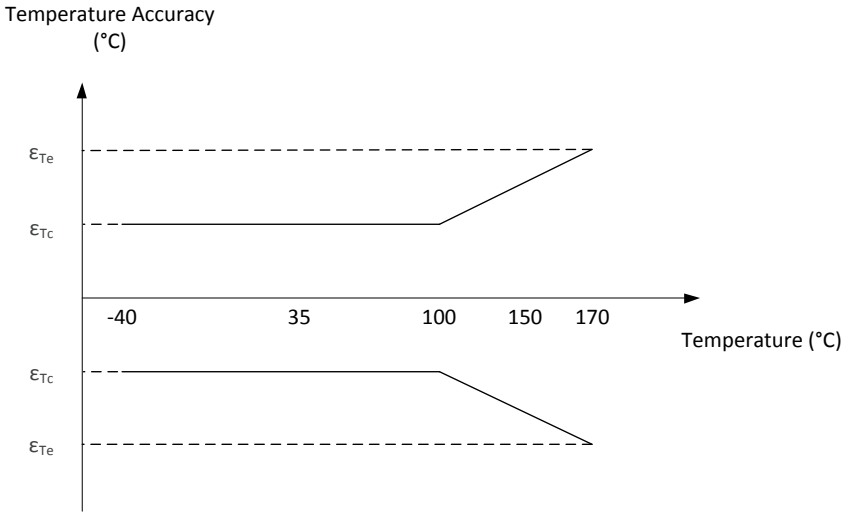

Figure 8: NTC temperature accuracy

11.1. MLX90818LXE-BAE-015

Transfer Curve Parameter	Symbol	Remarks	Value			Unit
Pressure 1	P1	See Figure 6: Pressure transfer function description at room temperature	0.1			Bar
Pressure 2	P2		4			Bar
Output 1	O1		193			LSB
Output 2	O2		3896			LSB
Low clamping level	LCL		1			LSB
High clamping level	HCL		4088			LSB
Pressure Accuracy Parameter	**Symbol**	**Remarks**	**Min**	**Typ**	**Max**	**Unit**
Output accuracy	ε_o	Overall accuracy expressed as output value (FS range from 193 to 3896)	-19 -0.5		19 0.5	LSB %FS
Pressure accuracy	ε_p	Overall accuracy expressed as pressure value	-20		20	mBar
Center temperature accuracy factor	Fc	See Figure 7: Pressure accuracy temperature factor			1	
Extended temperature accuracy factor	Fe				1.5	

Table 5: BAE-015 Default configuration

11.2. MLX90818LXE-BAE-016

Transfer Curve Parameter	Symbol	Remarks	Value			Unit
Pressure 1	P1	See Figure 6: Pressure transfer function description at room temperature	0.1			Bar
Pressure 2	P2		3			Bar
Output 1	O1		193			LSB
Output 2	O2		3896			LSB
Low clamping level	LCL		1			LSB
High clamping level	HCL		4088			LSB
Pressure Accuracy Parameter	**Symbol**	**Remarks**	**Min**	**Typ**	**Max**	**Unit**
Output accuracy	ε_o	Overall accuracy expressed as output value (FS range from 193 to 3896)	-19 -0.5		19 0.5	LSB %FS
Pressure accuracy	ε_p	Overall accuracy expressed as pressure value	-15		15	mBar
Center temperature accuracy factor	Fc	See Figure 7: Pressure accuracy temperature factor			1	
Extended temperature accuracy factor	Fe				1.5	
NTC Accuracy Parameter	**Symbol**	**Remarks**	**Min**	**Typ**	**Max**	**Unit**
Center NTC temperature accuracy	ε_{Tc}	Overall accuracy using the default NTC as described in Table 12 See Figure 8: NTC temperature accuracy	-1		1	°C
Extended NTC temperature accuracy	ε_{Te}		-2		2	°C

Table 6: BAE-016 Default Configuration

11.3. MLX90818LXE-BAE-017

Transfer Curve Parameter	Symbol	Remarks	Value			Unit
Pressure 1	P1	See Figure 6: Pressure transfer function description at room temperature	0.1			Bar
Pressure 2	P2		4			Bar
Output 1	O1		193			LSB
Output 2	O2		3896			LSB
Low clamping level	LCL		1			LSB
High clamping level	HCL		4088			LSB
Pressure Accuracy Parameter	**Symbol**	**Remarks**	**Min**	**Typ**	**Max**	**Unit**
Output accuracy	ε_o	Overall accuracy expressed as output value (FS range from 193 to 3896)	-19 -0.5		19 0.5	LSB %FS
Pressure accuracy	ε_p	Overall accuracy expressed as pressure value	-20		20	mBar
Center temperature accuracy factor	Fc	See Figure 7: Pressure accuracy temperature factor			1	
Extended temperature accuracy factor	Fe				1.5	
NTC Accuracy Parameter	**Symbol**	**Remarks**	**Min**	**Typ**	**Max**	**Unit**
Center NTC temperature accuracy	ε_{Tc}	Overall accuracy using the default NTC as described in Table 12 See Figure 8: NTC temperature accuracy	-1		1	°C
Extended NTC temperature accuracy	ε_{Te}		-2		2	°C

Table 7: BAE-017 Default Configuration

12. Filters

There are two filters available to filter the pressure signal. The first filter is a Small Signal Filter which can be disabled or enabled. The second filter is a first order low pass filter for the pressure signal which has a programmable depth.

An overview of the noise levels using different filter and gain combinations can be found in Table 9.

12.1. PFLT

PFLT is a programmable first order low pass filter. The depth of this filter can be selected. This filter can be configured to select the optimal trade-off between response time and output noise.

The low pass filter is implemented according to the following formula:

$$Filter_{output}(k) = \frac{Filter_{input}(k) - Filter_{output}(k-1)}{2^{PFLT}} + Filter_{output}(k-1)$$

The PFLT parameter in the formula is set in EEPROM and can have a value between 0 and 9. An overview of typical response times when applying a step on the input using different PFLT filter settings can be found in Table 8. The number of SENT frames indicated in the table includes the last frame which contains stable pressure data. Filter setting 0 disables the PFLT.

PFLT setting	Response time in SENT frames[4]
0	3
1	3
2	4
3	7
4	13
5	23
6	45
7	88
8	173
9	346

Table 8: Filter settings with corresponding typical response times

12.2. SSF

The SSF (Small Signal Filter) is a digital filter which is designed not to have an impact on the response time of a fast changing pressure signal like a pressure step. When a large signal change at the input is present, the filter is bypassed and not filtering the signal. For small signal changes, which are in most cases noise, the filter is used and filtering the pressure signal.

[4] *Tick time is set to 3us and Pause Pulse is enabled.*

The Small Signal Filter can be enabled or disabled in EEPROM. It is advised not to use the SSF in combination with the PFLT enabled.

Analog front end gain (CG)	Digital gain (G0)	PFLT setting	SSF	Noise (LSB pk-pk)
0	10000	0	1	2
0	10000	1	0	2
0	10000	4	0	1
0	10000	9	0	1
0	17000	0	1	2
0	17000	1	0	2
0	17000	4	0	1
0	17000	9	0	0
0	30000	0	1	4
0	30000	1	0	3
0	30000	4	0	2
0	30000	9	0	1
10	10000	0	1	3
10	10000	1	0	2
10	10000	4	0	1
10	10000	9	0	0
10	17000	0	1	4
10	17000	1	0	4
10	17000	4	0	2
10	17000	9	0	1
10	30000	0	1	5
10	30000	1	0	5
10	30000	4	0	3
10	30000	9	0	1
31	10000	0	1	8
31	10000	1	0	8
31	10000	4	0	6
31	10000	9	0	3
31	17000	0	1	12
31	17000	1	0	11
31	17000	4	0	10
31	17000	9	0	4
31	30000	0	1	41
31	30000	1	0	38
31	30000	4	0	15
31	30000	9	0	8

Table 9: Filter settings and gain combinations with corresponding pressure noise values

13. Analog Front End

The analog front end of the MLX90818 consists of a chopping stage and 3 amplification stages as can be seen in Figure 9. There are also several input diagnostics integrated into this front end to be able to detect a broken InP or InN connection or an input which is out of range. This diagnostic information is transferred to the microcontroller to handle further action for example flagging a diagnostic message.

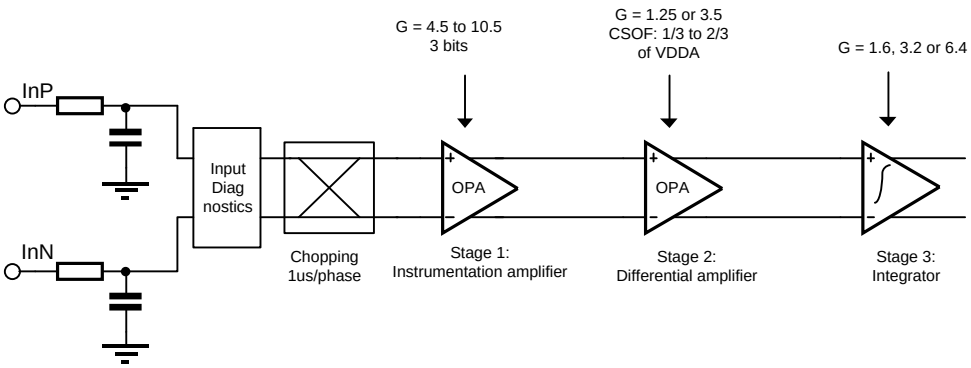

Figure 9: Analog front end block diagram

The first stage is an instrumentation amplifier of which the gain can be programmed using 3 bits to cover a gain range between 4.5 and 10.6.
Transfer equation:
OUTP1 – OUTN1 = Gst1*(InP – InN) in phase 1
OUTP1 – OUTN1 = Gst1*(InN – InP) in phase 2

The second stage is a fully differential amplifier. The gain of the amplifier can be calibrated using 1 bit.
Transfer equation:
OUTP2 – OUTN2 = -Gst2*(OUTP1 – OUTN1) – Gst2*(CSOF1 – CSOF2) in phase 1
OUTP2 – OUTN2 = -Gst2*(OUTN1 – OUTP1) – Gst2*(CSOF2 – CSOF1) in phase 2

The CSOF1 and CSOF2 signals are generated by the coarse offset DAC with the following transfer functions:

$$CSOF1 = \frac{VDDA}{2} + (-1)^{CO7} * \left(\frac{2}{3} - \frac{1}{3}\right) * \frac{VDDA}{2} * \frac{CO[6:0]}{127}$$

$$CSOF2 = \frac{VDDA}{2} - (-1)^{CO7} * \left(\frac{2}{3} - \frac{1}{3}\right) * \frac{VDDA}{2} * \frac{CO[6:0]}{127}$$

CO[6:0] fixes the DAC output. CO7 is used for the polarity.

The third stage is an integrator which is controlled using 2 bits to set a gain between 1.6 and 6.4
Transfer equation at the outputs of the amplifier:
OUTP3 – OUTN3 = -N*(C1/C2)*(OUTP2 – OUTN2)
OUTP3_common_mode and OUTN3_common_mode = VCM = VDDA/2
In this equation N represents the number of integration cycles which is a fixed value of N = 40.
C2 is a fixed feedback capacitor of approximately 5pF. C1 can have 3 different values: 0.2pF, 0.4pF or 0.8pF.

Transfer equation after the ADC:
Pressure_ADC = ((OUTN3 – OUTP3)*2^{16}/VDDA) + 32768

An overview of all possible values for Gst1, Gst2 and Gst3 can be found in Table 10 below.
The input stage is designed to work with an input common-mode voltage range between 42%Vbrg and 58%Vbrg.

Gain setting [-]	Gst1 [V/V]	Gst2 [V/V]	Gst3 [V/V]	Total gain [V/V]	FS Differential Input Signal [mV]
0	4.49	-1.25	1.6	-9.0	± 195
1	5.06	-1.25	1.6	-10.1	± 173
2	5.8	-1.25	1.6	-11.6	± 151
3	6.52	-1.25	1.6	-13.0	± 134
4	7.43	-1.25	1.6	-14.9	± 118
5	8.37	-1.25	1.6	-16.7	± 105
6	9.35	-1.25	1.6	-18.7	± 94
7	10.6	-1.25	1.6	-21.2	± 83
8	4.49	-3.5	1.6	-25.1	± 70
9	5.06	-3.5	1.6	-28.3	± 62
10	5.8	-3.5	1.6	-32.5	± 54
11	6.52	-3.5	1.6	-36.5	± 48
12	7.43	-3.5	1.6	-41.6	± 42
13	8.37	-3.5	1.6	-46.9	± 37
14	9.35	-3.5	1.6	-52.4	± 33
15	10.6	-3.5	1.6	-59.4	± 29
16	4.49	-3.5	3.2	-50.3	± 35
17	5.06	-3.5	3.2	-56.7	± 31
18	5.8	-3.5	3.2	-65.0	± 27
19	6.52	-3.5	3.2	-73.0	± 24
20	7.43	-3.5	3.2	-83.2	± 21
21	8.37	-3.5	3.2	-93.7	± 19
22	9.35	-3.5	3.2	-104.7	± 17
23	10.6	-3.5	3.2	-118.7	± 15
24	4.49	-3.5	6.4	-100.6	± 17
25	5.06	-3.5	6.4	-113.3	± 15
26	5.8	-3.5	6.4	-129.9	± 13
27	6.52	-3.5	6.4	-146.0	± 12
28	7.43	-3.5	6.4	-166.4	± 11
29	8.37	-3.5	6.4	-187.5	± 9
30	9.35	-3.5	6.4	-209.4	± 8
31	10.6	-3.5	6.4	-237.4	± 7

Table 10: Gain and input signal range of the analog front end

14. ADC

The 16 bit differential ADC has a range from –VDDA/2 to +VDDA/2.

There are 7 different ADC channels. Channel 0 is not used. Table 11 below describes all the channels.

ADC	Signal	Remarks
SIN[2:0]		
0	-	Nothing connected
1	P	Pressure
2	Tint	Internal Temperature
3	Vsup	External Supply
4	InP/InN	Multiplexing between Positive/Negative Sensor Output
5	Vdig	Digital Regulator
6	Tntc	NTC Output
7	VBE	Internal Voltage

Table 11: ADC channels

The different channels are converted in a constantly repeating sequence at a rate of 50µsec for each individual conversion. The order is shown in Figure 10 below.

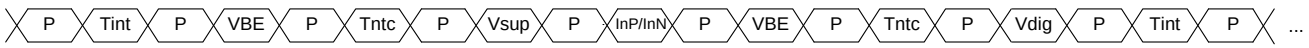

Figure 10: ADC sequence

15. Digital

The digital is built around a 16-bit microcontroller. It contains besides the processor also ROM, RAM and EEPROM and a set of user and system IO registers.

Temperature compensation of the pressure signal and pressure linearization is handled by the microcontroller. For the pressure compensation there are EEPROM parameters allocated to be able to cover a large variety of calibration approaches.
Both for gain and offset of the pressure signal, there is a separate temperature dependency programmable ranging from a temperature independence to a first order, second order and finally a third order compensation. This is reflected in EEPROM parameters for the offset (O0, O1, O2 and O3) and for the gain (G0, G1, G2 and G3).
If required, the linearity of the pressure signal can also be compensated without a temperature dependency or with a first order temperature dependency through EEPROM parameters L0 and L1.

Linearization of the NTC temperature is also covered partially by the microcontroller. More information in this topic can be found in chapter 16.

16. NTC Temperature Linearization

The linearization of the NTC temperature signal is split up in several stages. A schematic overview of these steps can be seen in Figure 11.

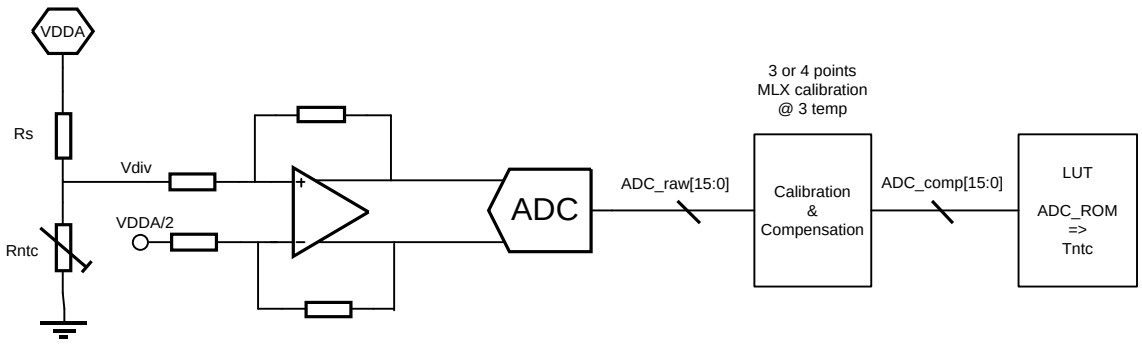

Figure 11: Block diagram NTC linearization

The complete system can be divided into 5 separate stages.

1. A resistor divider with internal resistor Rs is used to linearize Rntc into a voltage.
2. A fully differential amplifier with unity gain is used to drive the ADC.
3. The 16-bit ADC is being used to convert the analog resistor divider output voltage into a digital signal called ADC_raw.
4. With the help of calibration data saved in EEPROM the microcontroller will perform a first compensation on ADC_raw converting in to ADC_comp. This new value is targeted to be as close as possible to the value ADC_ROM.
5. Finally a look up table (LUT) will be used to convert the ADC_ROM values into the Tntc value which is the desired linearized NTC temperature.

The default NTC characteristic which is calibrated on option codes BAE-016 and BAE-017 can be found in Table 12. When using an NTC which does not match the coefficients described above, it is advised to contact Melexis.

The EEPROM coefficients which are used for the conversion from ADC_raw to ADC_comp are N0 to N3, N0_Diff_Low to N3_Diff_Low, N0_Diff_High to N3_Diff_High and TEMP1 to TEMP3.

T (°C)	R_T/R_{25}	R (Ω)	T (°C)	R_T/R_{25}	R (Ω)
-55	53.68	268400	75	0.18779	938.95
-50	39.112	195560	80	0.16261	813.05
-45	28.817	144085	85	0.14131	706.55
-40	21.459	107295	90	0.12324	616.2
-35	16.142	80710	95	0.10783	539.15
-30	12.259	61295	100	0.094663	473.315
-25	9.3959	46979.5	105	0.083361	416.805
-20	7.2644	36322	110	0.073638	368.19
-15	5.6633	28316.5	115	0.06524	326.2
-10	4.4503	22251.5	120	0.057964	289.82
-5	3.5236	17618	125	0.05164	258.2
0	2.8102	14051	130	0.046128	230.64
5	2.2567	11283.5	135	0.041309	206.545
10	1.8243	9121.5	140	0.037085	185.425
15	1.4841	7420.5	145	0.033373	166.865
20	1.2147	6073.5	150	0.030102	150.51
25	1	5000	155	0.027213	136.065
30	0.82785	4139.25	160	0.024654	123.27
35	0.689	3445	165	0.022384	111.92
40	0.57639	2881.95	170	0.020364	101.82
45	0.48457	2422.85	175	0.018564	92.82
50	0.40931	2046.55	180	0.016955	84.775
55	0.34731	1736.55	185	0.015515	77.575
60	0.29599	1479.95	190	0.014223	71.115
65	0.25332	1266.6	195	0.013063	65.315
70	0.21768	1088.4	200	0.012017	60.085

Table 12: Default NTC characteristic

17. SENT Configuration

The SENT output is designed to be compliant with the SAE J2716 rev. Apr 2016 SENT standard. The tick time is configurable in EEPROM using parameter TICK_DIV. The available tick time settings are 3us, 4us, 6us, 10us, 12us and 16us. A pause pulse can also be enabled to have a fixed frame length of 282 ticks. This can be done using parameter PAUSE.
In the default configuration a tick time of 3us is selected and the pause pulse is enabled.

17.1. Fast Channel Configuration

On the fast channel, 8 different options are available to configure channel 1 and channel 2. An overview of these different options and how to configure them can be found in Table 13.

#	FC_CFG setting	Fast Channel 1	Fast Channel 2	Remark	Default Configuration[5]
1	0	Pressure (3x 4 bit)	Inverse of Pressure (3x 4 bit)		
2	1	Pressure (3x 4 bit)	Rolling counter (2x 4 bit) and inverse of MSN of Pressure (1x 4 bit)		BAE-015
3	2	Pressure (3x 4 bit)	Medium temperature (3x 4 bit)	NTC temperature	BAE-016, BAE-017
4	3	Pressure (3x 4 bit)	Internal temperature (3x 4 bit)	PTAT temperature	
5	4	Pressure only (3x 4 bit)	/		
6	5	Pressure only (4x 3 bit)	/		
7	6	Data indicated by pointer 1 (3x 4 bit)	Data indicated by pointer 2 (3x 4 bit)	In this mode no diagnostics are available. FC configuration only used by Melexis.	
8	7	Pressure (3x 4 bit)	0 (3x 4 bit)		

Table 13: Fast channel configuration options

The selection of the fast channel output mode can be done by changing the parameter 'FC_CFG' in the EEPROM.

17.2. Slow Channel Configuration

The Slow Serial Channel is implemented according to the Enhanced Serial Message Format using 12 bit data and 8 bit message ID as described in the reference SENT protocol standard SAE J2716 rev. Apr 2016.

An overview of the different slow channel messages which are available in the MLX90818 can be found in Table 14. From this table 16 messages can be configured completely in EEPROM. The 12 bit data content of these messages can be configured freely. The ID of programmable message PR0, PR1, PR2 and PR3 is copied from EEPROM (2x 4 bit). The ID of PR5 is 1 bit higher than of PR4. The same is valid for the other pairs: PR6-7, PR8-9, …, PR14-15. This programmable ID is indicated in Table 14 as 0xYZ.

All programmable messages can also be enabled and disabled, but not all independently of each other:

- PR0, PR1, PR2 and PR3 can be each independently enabled or disabled
- PR4 and PR5 are together enabled or disabled
- PR6 and PR7 are together enabled or disabled
- PR8, PR9, PR10 and PR11 are together enabled or disabled
- PR12, PR13, PR14 and PR15 are together enabled or disabled

[5] *MLX90818 Option Code default configuration*

#	Type	ID	Description	Data	Rep
0	RAM	0x01	Diagnostic codes	Error_flags (See chapter 0 Diagnostics)	Y
1	EEPROM	0x03	Sensor Type	Configurable 0 to 15	N
2	EEPROM	0x04	Configuration code	Configurable 0 to 4095	N
3	EEPROM	0x05	Manufacturer Code	Configurable 0 to 4095	N
4	RAM	0x06	SENT revision	Selectable by bit in EEPROM Data = 3 or 4	N
5	RAM	0x07	Fast channel 1 Characteristic X1	Fast channel 1 Characteristic Configuration Enable / disable shared with MID08	N
6	RAM	0x08	Fast channel 1 Characteristic X2	Fast channel 1 Characteristic Configuration Enable / disable shared with MID07	N
7	EEPROM	0xYZ	Fully Programmable message 0	Programmable ID: 8 bit Programmable Data: 12 bit	N
8	RAM	0x23	Internal Temperature	According to default linear temperature transfer characteristic in SAE J2716 standard	Y
9	RAM	0x09	Fast channel 1 Characteristic Y1	Fast channel 1 Characteristic Configuration Enable / disable shared with MID0A	N
10	RAM	0x0A	Fast channel 1 Characteristic Y2	Fast channel 1 Characteristic Configuration Enable / disable shared with MID09	N
11	ROM	0x0B	Fast channel 2 Characteristic X1	If FC2 is pressure (FC_CFG = 0): ID0B = ID07 If FC2is temperature (FC_CFG = 2 or 3): Default temperature Characteristic X1: Fixed value: 233 Enable / disable shared with MID0C / 0D / 0E	N
12	ROM	0x0C	Fast channel 2 Characteristic X2	If FC2 is pressure (FC_CFG = 0): ID0C = ID08 If FC2is temperature (FC_CFG = 2 or 3): Default temperature Characteristic X2: Fixed value: 423 Enable / disable shared with MID0B / 0D / 0E	N
13	ROM	0x0D	Fast channel 2 Characteristic Y1	If FC2 is pressure (FC_CFG = 0): ID0D = ID09 If FC2is temperature (FC_CFG = 2 or 3): Default temperature Characteristic Y1: Fixed value: 264 Enable / disable shared with MID0B / 0C / 0E	N
14	ROM	0x0E	Fast channel 2 Characteristic Y2	If FC2 is pressure (FC_CFG = 0): ID0E = ID0A If FC2is temperature (FC_CFG = 2 or 3): Default temperature Characteristic Y2: Fixed value: 1784 Enable / disable shared with MID0B / 0C / 0D	N
15	EEPROM	0x29	Sensor ID #1	Programmable Data: 12 bit Enable / disable shared with MID2A / 2B / 2C	N
16	EEPROM	0xYZ	Fully Programmable message 1	Programmable ID: 8 bit Programmable Data: 12 bit	N

#	Type	ID	Description	Data	Rep
17	EEPROM	0x2A	Sensor ID #2	Programmable Data: 12 bit Enable / disable shared with MID29 / 2B / 2C	N
18	EEPROM	0x2B	Sensor ID #3	Programmable Data: 12 bit Enable / disable shared with MID29 / 2A / 2C	N
19	EEPROM	0x2C	Sensor ID #4	Programmable Data: 12 bit Enable / disable shared with MID29 / 2A / 2B	N
20	EEPROM	0xYZ	Fully Programmable message 2	Programmable ID: 8 bit Programmable Data: 12 bit	N
21	EEPROM	0xYZ	Fully Programmable message 3	Programmable ID: 8 bit Programmable Data: 12 bit	N
22	EEPROM	0xYZ	Programmable message 4	Programmable ID: 8 bit Programmable Data: 12 bit Enable / disable shared with programmable message 5	N
23	EEPROM	0xYZ	Programmable message 5	Message ID = ID programmable message 4 + 1 Programmable Data: 12 bit Enable / disable shared with programmable message 4	N
24	EEPROM	0xYZ	Programmable message 6	Programmable ID: 8 bit Programmable Data: 12 bit Enable / disable shared with programmable message 7	N
25	EEPROM	0xYZ	Programmable message 7	Message ID = ID programmable message 6 + 1 Programmable Data: 12 bit Enable / disable shared with programmable message 6	N
26	EEPROM	0xYZ	Programmable message 8	Programmable ID: 8 bit Programmable Data: 12 bit Enable / disable shared with programmable messages 9 / 10 / 11	N
27	EEPROM	0xYZ	Programmable message 9	Message ID = ID programmable message 8 + 1 Programmable Data: 12 bit Enable / disable shared with programmable messages 8 / 10 / 11	N
28	EEPROM	0xYZ	Programmable message 10	Programmable ID: 8 bit Programmable Data: 12 bit Enable / disable shared with programmable messages 8 / 9 / 11	N
29	EEPROM	0xYZ	Programmable message 11	Message ID = ID programmable message 10 + 1 Programmable Data: 12 bit Enable / disable shared with programmable messages 8 / 9 / 10	N

#	Type	ID	Description	Data	Rep
30	EEPROM	0xYZ	Programmable message 12	Programmable ID: 8 bit Programmable Data: 12 bit Enable / disable shared with programmable messages 13 / 14 / 15	N
31	EEPROM	0xYZ	Programmable message 13	Message ID = ID programmable message 12 + 1 Programmable Data: 12 bit Enable / disable shared with programmable messages 12 / 14 / 15	N
32	EEPROM	0xYZ	Programmable message 14	Programmable ID: 8 bit Programmable Data: 12 bit Enable / disable shared with programmable messages 12 / 13 / 15	N
33	EEPROM	0xYZ	Programmable message 15	Message ID = ID programmable message 14 + 1 Programmable Data: 12 bit Enable / disable shared with programmable messages 12 / 13 / 14	N
34	RAM	0x10	Medium Temperature	According to default linear temperature transfer characteristic in SAE J2716 standard	Y
35	RAM	0xE1	Device start-up check	Start-up self-check result data	N

Table 14: Slow channel messages

Messages which have a "Y" in the column Rep of Table 14 can be selected to have a higher occurrence in the slow channel message sequence. Their repetition rate can be configured as indicated in Table 15. The repeatable messages MID01h, MID10h and MID23h can be configured individually to have their own repetition rate. The repetition factor setting can be done in respectively "SENT_REP_FACT_ID_01", "SENT_REP_FACT_ID_10" and "SENT_REP_FACT_ID_23".

Repetition Factor Setting	Real Repetition Factor
0	Message repetition disabled
1	Message repeat every 2 messages
2	Message repeat every 3 messages
3	Message repeat every 4 messages
4	Message repeat every 5 messages
5	Message repeat every 6 messages
6	Message repeat every 7 messages
7	Message repeat every 8 messages
8	Message repeat every 9 messages
9	Message repeat every 10 messages
10	Message repeat every 12 messages
11	Message repeat every 16 messages
12	Message repeat every 20 messages
13	Message repeat every 24 messages
14	Message repeat every 28 messages
15	Message repeat every 30 messages

Table 15: Repetition rate settings

Once a message is configured to be repeatable, it will automatically have the highest priority. Therefore it will appear first in the slow message sequence.
The priority order between MID01, MID10 and MID23 can also be configured using EEPROM parameter "SC_R_O":

- SC_R_O = 0: Priority order: ID01h > ID10h > ID23h (default setting)
- SC_R_O = 1: Priority order: ID10h > ID23h > ID01h

An overview of the default slow channel configurations for our different option codes can be found in Table 16.

Option code	Info	0 0x01	1 0x03	2 0x04	3 0x05	4 0x06	5 0x07	6 0x08	7 0xYZ	8 0x23	9 0x09	10 0x0A	11 0x0B
BAE-015	Enabled ID Data	Rep 6 0x01 Diag.	✓ 0x03 0x004	✓ 0x04 0x000	✓ 0x05 0x006	✓ 0x06 0x004	✓ 0x07 0x053	✓ 0x08 0x144	✓ 0x81 0x000	✓ 0x23 Temp.	✓ 0x09 0x0C1	✓ 0x0A 0xF38	✗
BAE-016	Enabled ID Data	Rep 6 0x01 Diag.	✓ 0x03 0x007	✓ 0x04 0x000	✓ 0x05 0x006	✓ 0x06 0x004	✓ 0x07 0x053	✓ 0x08 0x0F4	✓ 0x81 0x000	✓ 0x23 Temp.	✓ 0x09 0x0C1	✓ 0x0A 0xF38	✗
BAE-017	Enabled ID Data	Rep 6 0x01 Diag.	✓ 0x03 0x007	✓ 0x04 0x000	✓ 0x05 0x006	✓ 0x06 0x004	✓ 0x07 0x053	✓ 0x08 0x144	✓ 0x81 0x000	✓ 0x23 Temp.	✓ 0x09 0x0C1	✓ 0x0A 0xF38	✗

Option code	Info	12 0x0C	13 0x0D	14 0x0E	15 0x29	16 0xYZ	17 0x2A	18 0x2B	19 0x2C	20 0xYZ	21 0xYZ	22 0xYZ	23 0xYZ
BAE-015	Enabled ID Data	✗	✗	✗	✓ 0x29 ID[6]	✓ 0x80 0x000	✓ 0x2A ID[6]	✓ 0x2B ID[6]	✓ 0x2C ID[6]	✓ 0x81 0x000	✗	✓ 0x90 0x000	✓ 0x91 0x000
BAE-016	Enabled ID Data	✗	✗	✗	✓ 0x29 ID[6]	✓ 0x80 0x000	✓ 0x2A ID[6]	✓ 0x2B ID[6]	✓ 0x2C ID[6]	✓ 0x81 0x000	✗	✓ 0x90 0x000	✓ 0x91 0x000
BAE-017	Enabled ID Data	✗	✗	✗	✓ 0x29 ID[6]	✓ 0x80 0x000	✓ 0x2A ID[6]	✓ 0x2B ID[6]	✓ 0x2C ID[6]	✓ 0x81 0x000	✗	✓ 0x90 0x000	✓ 0x91 0x000

Option code	Info	24 0xYZ	25 0xYZ	26 0xYZ	27 0xYZ	28 0xYZ	29 0xYZ	30 0xYZ	31 0xYZ	32 0xYZ	33 0xYZ	34 0x10	35 0xE1
BAE-015	Enabled ID Data	✓ 0x92 0x000	✓ 0x93 0x000	✓ 0x94 0x000	✓ 0x95 0x000	✓ 0x96 0x000	✓ 0x97 0x000	✗	✗	✗	✗	✗	✗
BAE-016	Enabled ID Data	✓ 0x92 0x000	✓ 0x93 0x000	✓ 0x94 0x000	✓ 0x95 0x000	✓ 0x96 0x000	✓ 0x97 0x000	✗	✗	✗	✗	✗	✗
BAE-017	Enabled ID Data	✓ 0x92 0x000	✓ 0x93 0x000	✓ 0x94 0x000	✓ 0x95 0x000	✓ 0x96 0x000	✓ 0x97 0x000	✗	✗	✗	✗	✗	✗

Table 16: Default configuration slow channel messages

[6] *The ID available in the data of slow channel messages 0x29 – 0x2C is a unique sensor ID*

18. Wrong Connections Overview

Table 17 provides an overview of the behavior of the MLX90818 when different combinations of connections to GND, VDD and OUT are made.

GND	VDD	SENT out	Effect on output	Action after wrong connection
0V	5V	SAE Standard Load Circuit	Normal operation	Normal operation
Disconnected	5V	SAE Standard Load Circuit	No communication	Normal operation
0V	Disconnected	SAE Standard Load Circuit	No communication	Normal operation
0V	5V	Disconnected	No communication	Normal operation
0V	5V	0V	0V – No communication	Normal operation
0V	5V	5V	5V – No communication	Normal operation
0V	5V	18V	18V – No communication	Normal operation
0V	0V	SAE Standard Load Circuit	No communication	Normal operation
0V	18V	SAE Standard Load Circuit	No communication	Normal operation
5V	5V	SAE Standard Load Circuit	No communication	Normal operation
5V	0V	SAE Standard Load Circuit	No communication	Normal operation

Table 17: Wrong connections overview

19. Diagnostics

19.1. Input Diagnostics

An overview of the different sensing element diagnostics conditions and their corresponding fast channel mapping and diagnostic bit information in slow channel can be found in Table 18.

Condition	Fast Channel Code	Error[7]
Sensing element supply disconnected	4090	ERROR_SPSN
Sensing element GND disconnected	4090	ERROR_SPSN
Sensing element P output disconnected	4090	ERROR_PRESS_BROKEN_W
Sensing element N output disconnected	4090	ERROR_PRESS_BROKEN_W
Sensing element supply shorted to GND	4090	ERROR_SPSN
Sensing element P output shorted to GND	4090	ERROR_SPSN
Sensing element N output shorted to GND	4090	ERROR_SPSN
Sensing element P output shorted to Vbrg	4090	ERROR_SPSN
Sensing element N output shorted to Vbrg	4090	ERROR_SPSN

Table 18: Input diagnostics

19.2. Diagnostic Sources

The MLX90818 product has several internal checks which monitor the status of device. These checks or diagnostic sources can be enabled or disabled based on the sensor module requirements. An overview of the different diagnostic sources, their enable/disable parameter and the explanation of their functionality can be found below in table Table 19.

Bit	Parameter	Error condition
10	ERR_EN_TINT	The Internal temperature could not be measured/calculated
9	ERR_EN_IO	RAM configuration error
8	ERR_EN_SPSN	SP or SN pin voltage out of range
7	ERR_EN_PV	The pressure value could not be measured/calculated
6	ERR_EN_PP	Pressure parameter error
5	ERR_EN_BW	A broken wire is detected in the pressure sensor path
4	ERR_EN_TMED	The Medium temperature could not be measured/calculated
3	ERR_EN_VDIG	The digital voltage is out of range
2	ERR_EN_VSUPH	The supply voltage is too high
1	ERR_EN_VSUPL	The supply voltage is too low
0	ERR_EN_TCHIP	The chip temperature out of range

Table 19: Diagnostic sources

[7] *See tables 21 to 23 for more information on the errors*

19.3. Fast and Slow Channel Diagnostics

There are two values reserved to show an error diagnostic mode in the fast channel. These values are 4090 and 4091. According to the type of diagnostic flag, one of the values will be transmitted if enabled. Internal errors like for example PRESS_BROKEN_W or PRESS_PAR use 4090 to indicate an error condition on the fast channel.
Errors conditions which can be linked to external influences can be configured to either transmit 4090 or 4091. These errors are VSUP_HIGH, VSUP_LOW, T_CHIP and VDIG.
For both VSUP_HIGH and VSUP_LOW fast channel overwriting using an error message can even be disabled. This allows you to still decode properly the pressure or optionally temperature information in case of an over voltage or under voltage condition. The OV or UV condition can still be monitored using the status bits for FC1 and FC2 and the slow channel diagnostic message MID01.
An overview of the fast channel error configuration can be found in Table 20. The EEPROM parameters V_ERR, FCE_VSUP, FCE_VDIG and FCE_TCHIP handle this configuration.

Fast Channel	Parameter	
ERR_VSUP	V_ERR	FCE_VSUP
No change	0	Not applicable
4091	1	0
4090	1	1

Fast Channel	Parameter
ERR_VDIG	FCE_VDIG
4091	0
4090	1

Fast Channel	Parameter
ERR_TCH	FCE_TCHIP
4091	0
4090	1

Table 20: Fast channel error configuration

The diagnostic slow channel message (MID 1) can be enabled or disabled independent of the other slow channel messages and it has an adjustable repetition factor (2, 4, .., 30).

More information on the different diagnostics shown in SENT, their fast channel, slow channel and status bit mapping can be found in the tables below.

ERROR_ENABLE parameter	ERROR	FC_CFG = 0				FC_CFG = 1				FC_CFG = 2				FC_CFG = 3			
		FC1	FC2	St[0]	St[1]	FC1	FC2	St[0]	St[1]	FC1	FC2	St[0]	St[1]	FC1	FC2	St[0]	St[1]
N.A.	no error	P	~P	0	0	P	cnt & ~MSN(P)	0	0	P	Tmed	0	0	P	Tint	0	0
-	not calibrated	4095	4095	1	1	4095	nc	1	nc	4095	4095	1	1	4095	4095	1	1
DIAG_INT	initialization error	4090	4090	1	1	4090	nc	1	nc	4090	4090	1	1	4090	4090	1	1
ERR_EN_TINT	T_INT	nc	nc	nc	nc	nc	nc	nc	nc	nc	nc	nc	nc	nc	4090	nc	1
ERR_EN_IO	RAM_IO_CFG	4090	4090	1	1	4090	nc	1	nc	4090	4090	1	1	4090	4090	1	1
ERR_EN_SPSN	SPSN	4090	4090	1	1	4090	nc	1	nc	4090	nc	1	nc	4090	nc	1	nc
ERR_EN_PV	PRESS	4090	4090	1	1	4090	nc	1	nc	4090	nc	1	nc	4090	nc	1	nc
ERR_EN_PP	PRESS_PAR	4090	4090	1	1	4090	nc	1	nc	4090	nc	1	nc	4090	nc	1	nc
ERR_EN_BW	PRESS_BROKEN_W	4090	4090	1	1	4090	nc	1	nc	4090	nc	1	nc	4090	nc	1	Nc
ERR_EN_TMED	T_MED	nc	nc	nc	nc	nc	nc	nc	nc	nc	4090	nc	1	nc	nc	nc	Nc
ERR_EN_VDIG	VDIG	ERR_VDIG	ERR_VDIG	1	1	ERR_VDIG	nc	1	nc	ERR_VDIG	ERR_VDIG	1	1	ERR_VDIG	ERR_VDIG	1	1
ERR_EN_TCHIP	T_CHIP	ERR_TCHIP	ERR_TCHIP	1	1	ERR_TCHIP	nc	1	nc	ERR_TCHIP	ERR_TCHIP	1	1	ERR_TCHIP	ERR_TCHIP	1	1
ERR_EN_VSUPH	VSUP_HIGH	ERR_VSUP	ERR_VSUP	1	1	ERR_VSUP	nc	1	nc	ERR_VSUP	ERR_VSUP	1	1	ERR_VSUP	ERR_VSUP	1	1
ERR_EN_VSUPL	VSUP_LOW	ERR_VSUP	ERR_VSUP	1	1	ERR_VSUP	nc	1	nc	ERR_VSUP	ERR_VSUP	1	1	ERR_VSUP	ERR_VSUP	1	1
DIAG_P1	P @ FC1 =	1	nc	1	nc	1	nc	1	nc	1	nc	1	nc	1	nc	1	Nc
DIAG_P1	P @ FC1 =	4088	nc	1	nc	4088	nc	1	nc	4088	nc	1	nc	4088	nc	1	Nc
DIAG_P2	P @ FC1 =	< Y1	nc	nc	nc	< Y1	nc	nc	nc	< Y1	nc	nc	nc	< Y1	nc	nc	Nc
DIAG_P2	P @ FC1 =	>Y2	nc	nc	nc	>Y2	nc	nc	nc	>Y2	nc	nc	nc	>Y2	nc	nc	Nc
DIAG_T1	T @ FC2 =									nc	1	nc	1	nc	1	nc	1
DIAG_T1	T @ FC2 =									nc	4088	nc	1	nc	4088	nc	1
DIAG_T2	T @ FC2 =									nc	<=186	nc	1	nc	<=186	nc	1
DIAG_T2	T @ FC2 =									nc	>=2266	nc	1	nc	>=2266	nc	1

Table 21: Diagnostics in fast channel configuration 0 - 3

ERROR_ENABLE parameter	ERROR	FC_CFG = 4		FC_CFG = 5		FC_CFG = 6				FC_CFG = 7			
		FC1	St[0]	FC1	St[0]	FC1	FC2	St[0]	St[1]	FC1	FC2	St[0]	St[1]
N.A.	no error	P (3x 4b)	0	P (4x 3b)	0	[fc0_ptr]	[fc1_ptr]	0	0	P	0	0	0
-	not calibrated	4095	1	4095	1	nc	nc	nc	nc	4095	nc	1	nc
DIAG_INT	initialization error	4090	1	4090	1	nc	nc	nc	nc	4090	nc	1	nc
ERR_EN_TINT	T_INT	nc	nc	nc	nc	nc	nc	nc	nc	nc	nc	nc	nc
ERR_EN_IO	RAM_IO_CFG	4090	1	4090	1	nc	nc	nc	nc	4090	nc	1	nc
ERR_EN_SPSN	SPSN	4090	1	4090	1	nc	nc	nc	nc	4090	nc	1	nc
ERR_EN_PV	PRESS	4090	1	4090	1	nc	nc	nc	nc	4090	nc	1	nc
ERR_EN_PP	PRESS_PAR	4090	1	4090	1	nc	nc	nc	nc	4090	nc	1	nc
ERR_EN_BW	PRESS_BROKEN_W	4090	1	4090	1	nc	nc	nc	nc	4090	nc	1	nc
ERR_EN_TMED	T_MED	nc	nc	nc	nc	nc	nc	nc	nc	nc	nc	nc	nc
ERR_EN_VDIG	VDIG	ERR_VDIG	1	ERR_VDIG	1	nc	nc	nc	nc	ERR_VDIG	nc	1	nc
ERR_EN_TCHIP	T_CHIP	ERR_TCHIP	1	ERR_TCHIP	1	nc	nc	nc	nc	ERR_TCHIP	nc	1	nc
ERR_EN_VSUPH	VSUP_HIGH	ERR_VSUP	1	ERR_VSUP	1	nc	nc	nc	nc	ERR_VSUP	nc	1	nc
ERR_EN_VSUPL	VSUP_LOW	ERR_VSUP	1	ERR_VSUP	1	nc	nc	nc	nc	ERR_VSUP	nc	1	nc
DIAG_P1	P @ FC1 =	1	1	1	1	nc	nc	1	nc	1	nc	1	nc
DIAG_P1	P @ FC1 =	4088	1	4088	1	nc	nc	1	nc	4088	nc	1	nc
DIAG_P2	P @ FC1 =	< Y1	nc	< Y1	nc	nc	nc	nc	nc	< Y1	nc	nc	nc
DIAG_P2	P @ FC1 =	>Y2	nc	>Y2	nc	nc	nc	nc	nc	>Y2	nc	nc	nc
DIAG_T1	T @ FC2 =					nc	nc	nc	nc				
DIAG_T1	T @ FC2 =					nc	nc	nc	nc				
DIAG_T2	T @ FC2 =					nc	nc	nc	nc				
DIAG_T2	T @ FC2 =					nc	nc	nc	nc				

Table 22: Diagnostics in fast channel configuration 4 - 7

ERROR_ENABLE parameter	ERROR	Slow channel diagnostic
N.A.	no error	000h
-	not calibrated	nc = no change
DIAG_INT	initialization error	003h (only once when reinit passes after reset) (Remark: in contrary to the other errors, DIAG_INT is used here to enable/disable the complete check and not only the customized slow channel error reporting)
ERR_EN_TINT	T_INT	A05h if DIAG_INT=1, else set bit 11 & 10
ERR_EN_IO	RAM_IO_CFG	A05h if DIAG_INT=1, else set bit 11 & 9
ERR_EN_SPSN	SPSN	A05h if DIAG_INT=1, else set bit 11 & 8
ERR_EN_PV	PRESS	A05h if DIAG_INT=1, else set bit 11 & 7
ERR_EN_PP	PRESS_PAR	A05h if DIAG_INT=1, else set bit 11 & 6
ERR_EN_BW	PRESS_BROKEN_W	A05h if DIAG_INT=1, else set bit 11 & 5
ERR_EN_TMED	T_MED	A05h if DIAG_INT=1, else set bit 11 & 4
ERR_EN_VDIG	VDIG	A05h if DIAG_INT=1, else set bit 11 & 3
ERR_EN_TCHIP	T_CHIP	A05h if DIAG_INT=1, else set bit 11 & 0
ERR_EN_VSUPH	VSUP_HIGH	021h / 901h if DIAG_VSUP = 0 / 1, but set bit 11 & 2 if also other errors are reported in the fast channel and if DIAG_INT=0 (if DIAG_INT=1 and other errors, then A05h)
ERR_EN_VSUPL	VSUP_LOW	020h / 900h if DIAG_VSUP = 0 / 1, but set bit 11 & 1 if also other errors are reported in the fast channel and if DIAG_INT=0 (if DIAG_INT=1 and other errors, then A05h)
DIAG_P1	P @ FC1 =	002h if DIAG_PCL = 0 / 812h if DIAG_PCL = 1
DIAG_P1	P @ FC1 =	001h if DIAG_PCL = 0 / 811h if DIAG_PCL = 1
DIAG_P2	P @ FC1 =	002h
DIAG_P2	P @ FC1 =	001h
DIAG_T1	T @ FC2 =	005h
DIAG_T1	T @ FC2 =	004h
DIAG_T2	T @ FC2 =	805h (Remark: value 186 matches with -50 degC)
DIAG_T2	T @ FC2 =	804h (Remark: value 2266 matches with +210 degC)

Table 23: Diagnostics in slow channel

Multiple diagnostic errors can be flagged in the range 8xxh – FFFh in case parameter DIAG_INT is set to 0.

The level of the over and under voltage diagnostics can be configured according to the ranges described in Table 24.

Parameter	Min	Max	Units	Comment
Under voltage detection threshold range	3.25	5.74	V	Optional and Programmable with 8 bits in parameter VSUP_LOW
Overvoltage detection threshold range	4.25	6.74	V	Optional and Programmable with 8 bits in parameter VSUP_HIGH
Over-/Under-voltage detection accuracy		200	mV	

Table 24: MLX90818 under and overvoltage detection

The default configuration for diagnostics on the different option codes can be found in Table 25 below.

EEPROM Parameter	BAE-015	BAE-016	BAE-017
ERR_EN_TINT	1	1	1
ERR_EN_IO	1	1	1
ERR_EN_SPSN	1	1	1
ERR_EN_PV	1	1	1
ERR_EN_PP	1	1	1
ERR_EN_BW	1	1	1
ERR_EN_TMED	0	1	1
ERR_EN_VDIG	1	1	1
ERR_EN_VSUPH	0	0	0
ERR_EN_VSUPL	1 (4V)	1 (4.5V)	1 (4.5V)
ERR_EN_TCHIP	1	1	1
FCE_VDIG	1	1	1
FCE_TCHIP	1	1	1
DIAG_PCL	0	1	1
DIAG_INT	1	1	1
V_ERR	0	0	0
FCE_VSUP	1	1	1
DIAG_VSUP	1	1	1
DIAG_P2	1	0	0
DIAG_P1	1	1	1
DIAG_T2	0	0	0
DIAG_T1	0	1	1

Table 25: Default diagnostic configurations

20. Timings

Parameter	Symbol	Comment	Min	Typ	Max	Unit
SENT frame period	tframe	Shortest message (without pause pulse) and longest message (pause pulse enabled). Example in µs calculated using a 3µs tick time.	154 462		282 846[8]	ticks µs
Start-up time (to first falling edge)	tsu1	Based on default settings.	0.7	1	1.1	ms
Start-up time (up to first data received)	tsu2	First SENT frame contains valid pressure data. Calculation based on 3µs tick time.			1.946[8]	ms

Table 26: Start-up timings

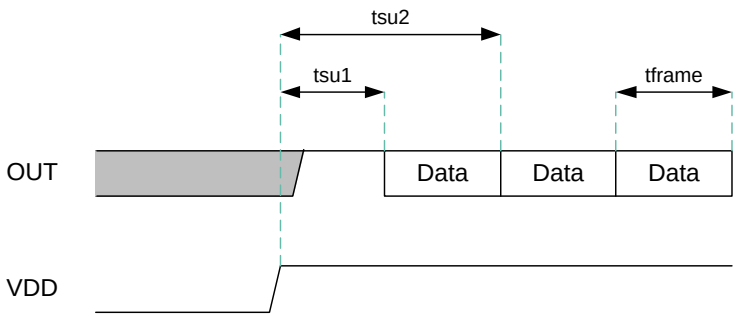

Figure 12: Start-up timings

[8] *Using nominal tick time, excluding tick time variations.*

21. Application Information

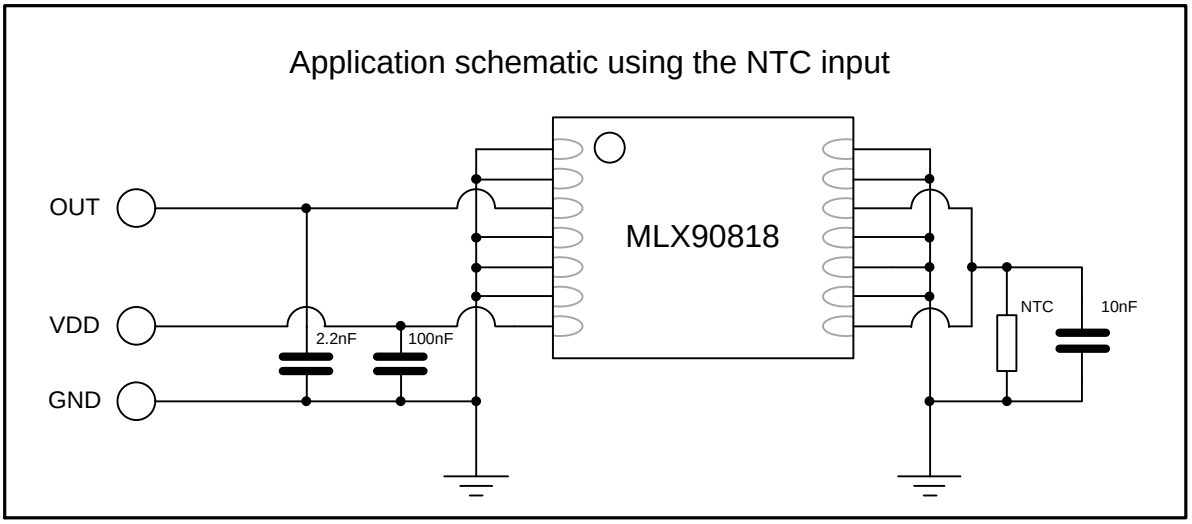

Figure 13: Basic application schematic using NTC

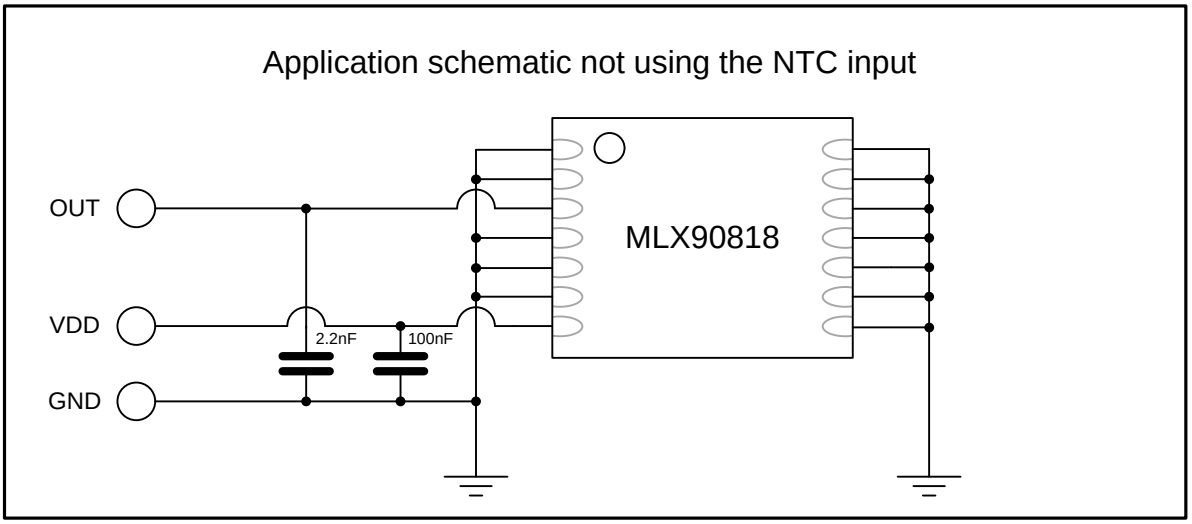

Figure 14: Basic application schematic without NTC

These recommendations for external components are only providing a basic protection. Depending on the module design and the EMC speciation requirements different configurations can be needed.

22. Standard information regarding manufacturability of Melexis products with different soldering processes

Our products are classified and qualified regarding soldering technology, solderability and moisture sensitivity level according to following test methods:

Reflow Soldering SMD's (Surface Mount Devices)

- IPC/JEDEC J-STD-020
  Moisture/Reflow Sensitivity Classification for Nonhermetic Solid State Surface Mount Devices
  (classification reflow profiles according to table 5-2)
- EIA/JEDEC JESD22-A113
  Preconditioning of Nonhermetic Surface Mount Devices Prior to Reliability Testing
  (reflow profiles according to table 2)

Wave Soldering SMD's (Surface Mount Devices) and THD's (Through Hole Devices)

- EN60749-20
  Resistance of plastic- encapsulated SMD's to combined effect of moisture and soldering heat
- EIA/JEDEC JESD22-B106 and EN60749-15
  Resistance to soldering temperature for through-hole mounted devices

Iron Soldering THD's (Through Hole Devices)

- EN60749-15
  Resistance to soldering temperature for through-hole mounted devices

Solderability SMD's (Surface Mount Devices) and THD's (Through Hole Devices)

- EIA/JEDEC JESD22-B102 and EN60749-21
  Solderability

For all soldering technologies deviating from above mentioned standard conditions (regarding peak temperature, temperature gradient, temperature profile etc) additional classification and qualification tests have to be agreed upon with Melexis.

The application of Wave Soldering for SMD's is allowed only after consulting Melexis regarding assurance of adhesive strength between device and board.

Melexis is contributing to global environmental conservation by promoting **lead free** solutions. For more information on qualifications of **RoHS** compliant products (RoHS = European directive on the Restriction Of the use of certain Hazardous Substances) please visit the quality page on our website: http://www.melexis.com/quality.aspx

23. ESD Precautions

Electronic semiconductor products are sensitive to Electro Static Discharge (ESD).
Always observe Electro Static Discharge control procedures whenever handling semiconductor products.

24. Package Information

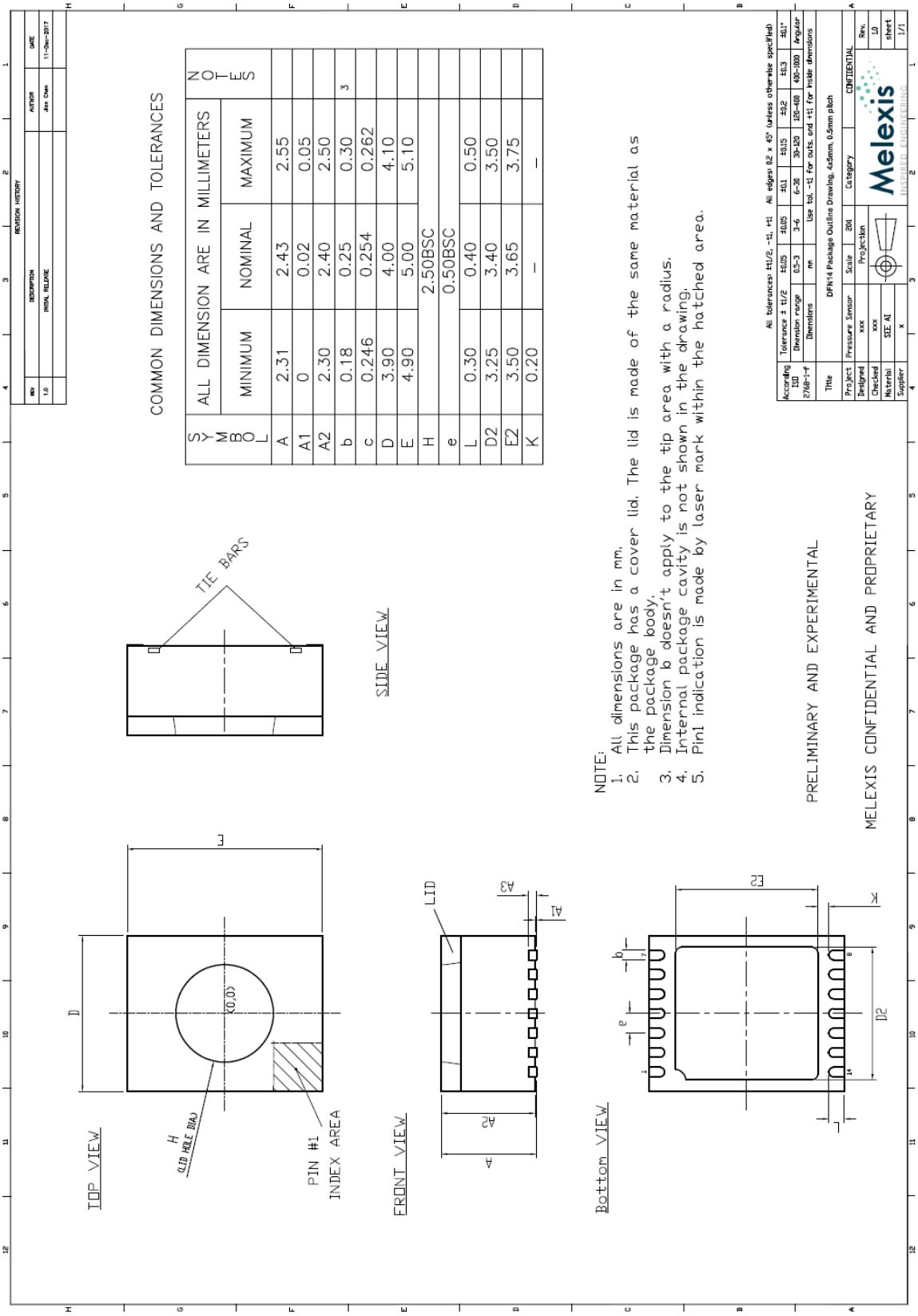

Figure 15: MLX90818 package drawing

25. PCB Land Pattern Recommendation

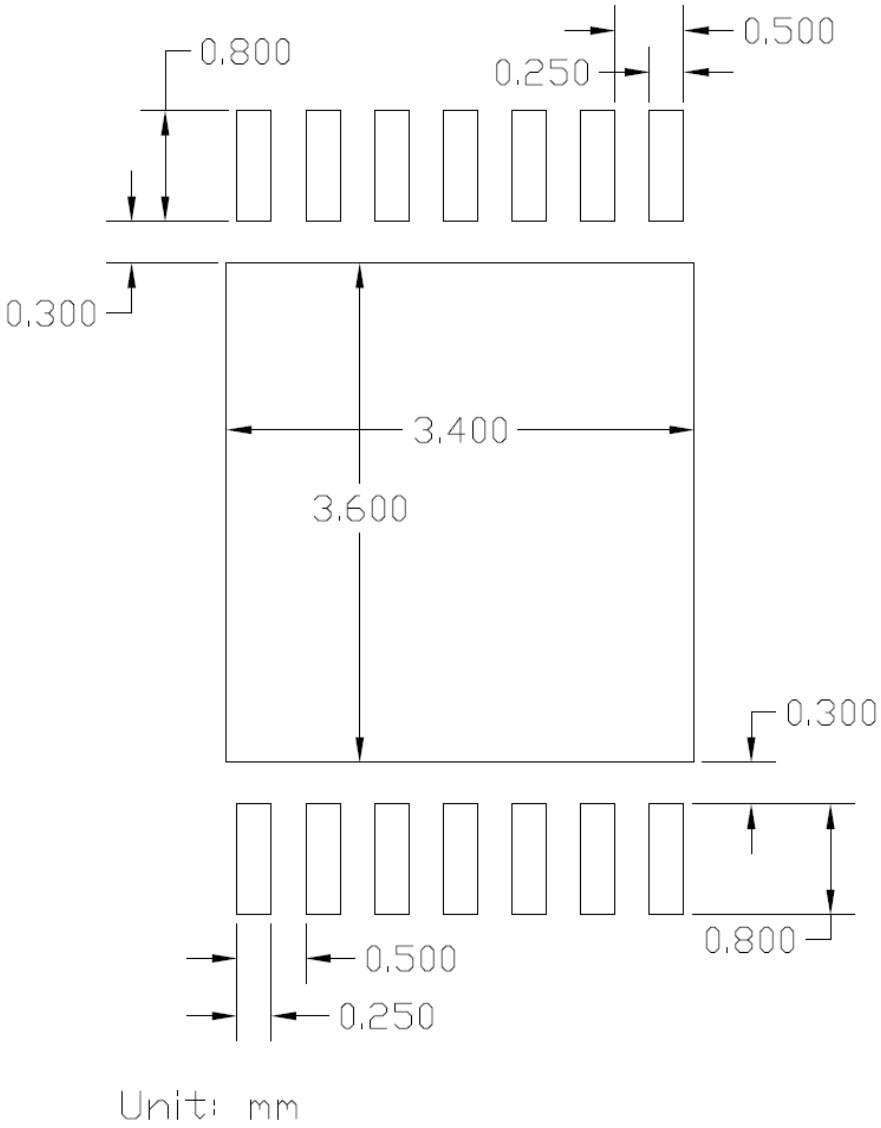

Figure 16: PCB Land Pattern

26. Contact

For the latest version of this document, go to our website at www.melexis.com.

For additional information, please contact our Direct Sales team and get help for your specific needs:

Europe, Africa	Telephone: +32 13 67 04 95
	Email : sales_europe@melexis.com
Americas	Telephone: +1 603 223 2362
	Email : sales_usa@melexis.com
Asia	Email : sales_asia@melexis.com

27. Disclaimer

The information furnished by Melexis herein ("Information") is believed to be correct and accurate. Melexis disclaims (i) any and all liability in connection with or arising out of the furnishing, performance or use of the technical data or use of the product(s) as described herein ("Product") (ii) any and all liability, including without limitation, special, consequential or incidental damages, and (iii) any and all warranties, express, statutory, implied, or by description, including warranties of fitness for particular purpose, non-infringement and merchantability. No obligation or liability shall arise or flow out of Melexis' rendering of technical or other services.
The Information is provided "as is" and Melexis reserves the right to change the Information at any time and without notice. Therefore, before placing orders and/or prior to designing the Product into a system, users or any third party should obtain the latest version of the relevant information to verify that the information being relied upon is current.
Users or any third party must further determine the suitability of the Product for its application, including the level of reliability required and determine whether it is fit for a particular purpose.
The Information is proprietary and/or confidential information of Melexis and the use thereof or anything described by the Information does not grant, explicitly or implicitly, to any party any patent rights, licenses, or any other intellectual property rights.
This document as well as the Product(s) may be subject to export control regulations. Please be aware that export might require a prior authorization from competent authorities.
The Product(s) are intended for use in normal commercial applications. Unless otherwise agreed upon in writing, the Product(s) are not designed, authorized or warranted to be suitable in applications requiring extended temperature range and/or unusual environmental requirements. High reliability applications, such as medical life-support or life-sustaining equipment are specifically not recommended by Melexis.
The Product(s) may not be used for the following applications subject to export control regulations: the development, production, processing, operation, maintenance, storage, recognition or proliferation of 1) chemical, biological or nuclear weapons, or for the development, production, maintenance or storage of missiles for such weapons: 2) civil firearms, including spare parts or ammunition for such arms; 3) defense related products, or other material for military use or for law enforcement; 4) any applications that, alone or in combination with other goods, substances or organisms could cause serious harm to persons or goods and that can be used as a means of violence in an armed conflict or any similar violent situation.
The Products sold by Melexis are subject to the terms and conditions as specified in the Terms of Sale, which can be found at https://www.melexis.com/en/legal/terms-and-conditions.

This document supersedes and replaces all prior information regarding the Product(s) and/or previous versions of this document.

Melexis NV © - No part of this document may be reproduced without the prior written consent of Melexis. (2016)

ISO/TS 16949 and ISO14001 Certified