REJ09B0395-0400

Everywhere you imagine. RENESAS

The revision list can be viewed directly by clicking the title page. The revision list summarizes the locations of revisions and additions. Details should always be checked by referring to the relevant text.

16

H8/3008
Hardware Manual

Hardware Manual

Renesas 16-Bit Single-Chip Microcomputer
H8 Family/H8/300H Series

H8/3008 HD6413008F
HD6413008TE
HD6413008VF
HD6413008VTE

Rev.4.00
Revision date: Aug. 20, 2007

RenesasTechnology
www.renesas.com

Notes regarding these materials

1. This document is provided for reference purposes only so that Renesas customers may select the appropriate Renesas products for their use. Renesas neither makes warranties or representations with respect to the accuracy or completeness of the information contained in this document nor grants any license to any intellectual property rights or any other rights of Renesas or any third party with respect to the information in this document.
2. Renesas shall have no liability for damages or infringement of any intellectual property or other rights arising out of the use of any information in this document, including, but not limited to, product data, diagrams, charts, programs, algorithms, and application circuit examples.
3. You should not use the products or the technology described in this document for the purpose of military applications such as the development of weapons of mass destruction or for the purpose of any other military use. When exporting the products or technology described herein, you should follow the applicable export control laws and regulations, and procedures required by such laws and regulations.
4. All information included in this document such as product data, diagrams, charts, programs, algorithms, and application circuit examples, is current as of the date this document is issued. Such information, however, is subject to change without any prior notice. Before purchasing or using any Renesas products listed in this document, please confirm the latest product information with a Renesas sales office. Also, please pay regular and careful attention to additional and different information to be disclosed by Renesas such as that disclosed through our website. (http://www.renesas.com)
5. Renesas has used reasonable care in compiling the information included in this document, but Renesas assumes no liability whatsoever for any damages incurred as a result of errors or omissions in the information included in this document.
6. When using or otherwise relying on the information in this document, you should evaluate the information in light of the total system before deciding about the applicability of such information to the intended application. Renesas makes no representations, warranties or guaranties regarding the suitability of its products for any particular application and specifically disclaims any liability arising out of the application and use of the information in this document or Renesas products.
7. With the exception of products specified by Renesas as suitable for automobile applications, Renesas products are not designed, manufactured or tested for applications or otherwise in systems the failure or malfunction of which may cause a direct threat to human life or create a risk of human injury or which require especially high quality and reliability such as safety systems, or equipment or systems for transportation and traffic, healthcare, combustion control, aerospace and aeronautics, nuclear power, or undersea communication transmission. If you are considering the use of our products for such purposes, please contact a Renesas sales office beforehand. Renesas shall have no liability for damages arising out of the uses set forth above.
8. Notwithstanding the preceding paragraph, you should not use Renesas products for the purposes listed below:
   (1) artificial life support devices or systems
   (2) surgical implantations
   (3) healthcare intervention (e.g., excision, administration of medication, etc.)
   (4) any other purposes that pose a direct threat to human life
   Renesas shall have no liability for damages arising out of the uses set forth in the above and purchasers who elect to use Renesas products in any of the foregoing applications shall indemnify and hold harmless Renesas Technology Corp., its affiliated companies and their officers, directors, and employees against any and all damages arising out of such applications.
9. You should use the products described herein within the range specified by Renesas, especially with respect to the maximum rating, operating supply voltage range, movement power voltage range, heat radiation characteristics, installation and other product characteristics. Renesas shall have no liability for malfunctions or damages arising out of the use of Renesas products beyond such specified ranges.
10. Although Renesas endeavors to improve the quality and reliability of its products, IC products have specific characteristics such as the occurrence of failure at a certain rate and malfunctions under certain use conditions. Please be sure to implement safety measures to guard against the possibility of physical injury, and injury or damage caused by fire in the event of the failure of a Renesas product, such as safety design for hardware and software including but not limited to redundancy, fire control and malfunction prevention, appropriate treatment for aging degradation or any other applicable measures. Among others, since the evaluation of microcomputer software alone is very difficult, please evaluate the safety of the final products or system manufactured by you.
11. In case Renesas products listed in this document are detached from the products to which the Renesas products are attached or affixed, the risk of accident such as swallowing by infants and small children is very high. You should implement safety measures so that Renesas products may not be easily detached from your products. Renesas shall have no liability for damages arising out of such detachment.
12. This document may not be reproduced or duplicated, in any form, in whole or in part, without prior written approval from Renesas.
13. Please contact a Renesas sales office if you have any questions regarding the information contained in this document, Renesas semiconductor products, or if you have any other inquiries.

General Precautions in the Handling of MPU/MCU Products

The following usage notes are applicable to all MPU/MCU products from Renesas. For detailed usage notes on the products covered by this manual, refer to the relevant sections of the manual. If the descriptions under General Precautions in the Handling of MPU/MCU Products and in the body of the manual differ from each other, the description in the body of the manual takes precedence.

1. Handling of Unused Pins

   Handle unused pins in accord with the directions given under Handling of Unused Pins in the manual.

   — The input pins of CMOS products are generally in the high-impedance state. In operation with an unused pin in the open-circuit state, extra electromagnetic noise is induced in the vicinity of LSI, an associated shoot-through current flows internally, and malfunctions may occur due to the false recognition of the pin state as an input signal. Unused pins should be handled as described under Handling of Unused Pins in the manual.

2. Processing at Power-on

   The state of the product is undefined at the moment when power is supplied.

   — The states of internal circuits in the LSI are indeterminate and the states of register settings and pins are undefined at the moment when power is supplied.

     In a finished product where the reset signal is applied to the external reset pin, the states of pins are not guaranteed from the moment when power is supplied until the reset process is completed.

     In a similar way, the states of pins in a product that is reset by an on-chip power-on reset function are not guaranteed from the moment when power is supplied until the power reaches the level at which resetting has been specified.

3. Prohibition of Access to Reserved Addresses

   Access to reserved addresses is prohibited.

   — The reserved addresses are provided for the possible future expansion of functions. Do not access these addresses; the correct operation of LSI is not guaranteed if they are accessed.

4. Clock Signals

   After applying a reset, only release the reset line after the operating clock signal has become stable. When switching the clock signal during program execution, wait until the target clock signal has stabilized.

   — When the clock signal is generated with an external resonator (or from an external oscillator) during a reset, ensure that the reset line is only released after full stabilization of the clock signal. Moreover, when switching to a clock signal produced with an external resonator (or by an external oscillator) while program execution is in progress, wait until the target clock signal is stable.

5. Differences between Products

   Before changing from one product to another, i.e. to one with a different type number, confirm that the change will not lead to problems.

   — The characteristics of MPU/MCU in the same group but having different type numbers may differ because of the differences in internal memory capacity and layout pattern. When changing to products of different type numbers, implement a system-evaluation test for each of the products.

Preface

The H8/3008 is a high-performance single-chip microcomputer that incorporates the internal 32-bit H8/300H CPU and is also equipped with peripheral functions necessary for configuring a user system.

The H8/3008 is built in with a variety of peripheral functions such as ROM, RAM, 16-bit timer, 8-bit timer, programmable timing pattern controller (TPC), watchdog timer (WDT), serial communication interface (SCI), D/A converter, A/D converter and I/O ports.

Target Readers: This manual is designed for use by people who design application systems using the H8/3008.
To use this manual, basic knowledge of electric circuits, logic circuits and microcomputers is required.

Purpose: This manual provides the information of the hardware functions and electrical characteristics of the H8/3008.
The H8/300H Series Programming Manual contains detailed information of executable instructions. Please read the Programming Manual together with this manual.

How to Use the Book:

- To understand general functions
  → Read the manual from the beginning.
  The manual explains the CPU, system control functions, peripheral functions and electrical characteristics in that order.
- To understanding CPU functions
  → Refer to the separate H8/300H Series Programming Manual.
- To see the detailed functions of registers with known names
  → Refer to Appendix B “Internal I/O Registers” for the summary of addresses, bit description and initialization.

Explanatory Note: Bit sequence: upper bit at left, and lower bit at right

List of Related Documents: The latest documents are available on our Web site. Please make sure that you have the latest version.
http://www.renesas.com/

User manual for H8/3008

Document Title	Document No.
H8/3008 Hardware Manual	This manual
H8/300H Series Software Manual	REJ09B0213-0300

User manual for development tools

Document Title	Document No.
C/C++ Compiler, Assembler, Optimizing Linkage Editor User's Manual	REJ10B0058-0100H
H8S, H8/300 Series Simulator/Debugger User's Manual	REJ10B0211-0300
High-performance Embedded Workshop User's Manual	REJ10J1554-0100
H8S, H8/300 Series High-performance Embedded Workshop, High-performance Debugging Interface User's Manual	ADE-702-231

Application note

Document Title	Document No.
H8/300H for CPU Application Note	ADE-502-033
H8/300H On-Chip Supporting Modules Application Note	REJ05B0522-0300
H8/300H Technical Q&A	REJ05B0521-0200

Main Revisions for This Edition

Item	Page	Revision (See Manual for Details)
All	—	Company name and brand names amended (Before) Hitachi, Ltd. → (After) Renesas Technology Corp.
1.1 Overview	1	Description amended Four MCU operating modes offer a choice of bus width and address space size. The modes (modes 1 to 4) include four expanded modes.
1.2 Block Diagram Figure 1.1 Block Diagram	5	Figure amended

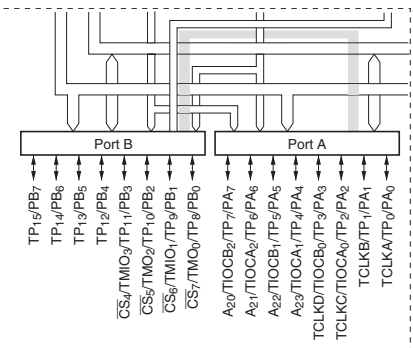

1.3.1 Pin Arrangement Table 1.2 Comparison of H8/3008 Pin Arrangements	6	Table amended H8/3062 F-ZTAT B-Mask Version
8.2.10 Timer I/O Control Register (TIOR) Bits 6 to 4—I/O Control B2 to B0 (IOB2 to IOB0)	203	Table amended

Bit 6 IOB2	Bit 5 IOB1	Bit 4 IOB0	Function
1	0	0	GRB is an input capture register
		1	
	1	0	
		1	

Bits 2 to 0—I/O Control A2 to A0 (IOA2 to IOA0)		Table amended

Bit 2 IOA2	Bit 1 IOA1	Bit 0 IOA0	Function
1	0	0	GRA is an input capture register
		1	
	1	0	
		1	

Item	Page	Revision (See Manual for Details)
9.4.1 8TCNT Count Timing Figure 9.8 Count Timing for Internal Clock Input	261	Figure amended 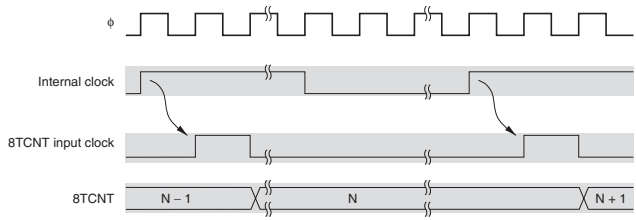
Figure 9.9 Count Timing for External Clock Input (Both-Edge Detection)	262	Figure amended 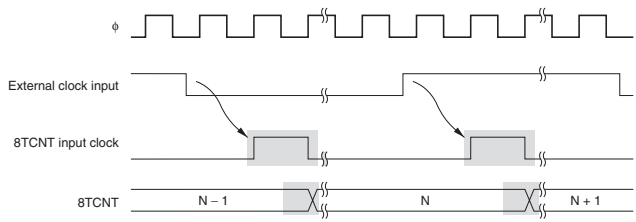
9.4.2 Compare Match Timing Figure 9.11 Timing of Clear by Compare Match	263	Figure amended 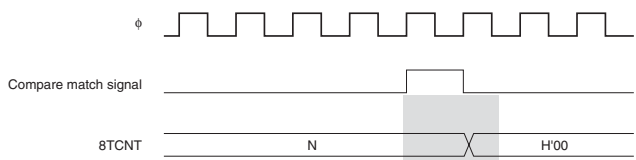
Figure 9.12 Timing of Clear by Input Capture		Figure amended 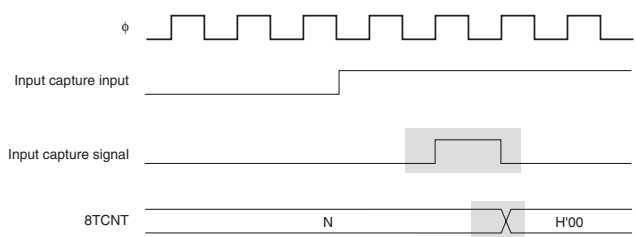

Item	Page	Revision (See Manual for Details)
9.4.3 Input Capture Signal Timing Figure 9.13 Timing of Input Capture Input Signal	264	Figure amended 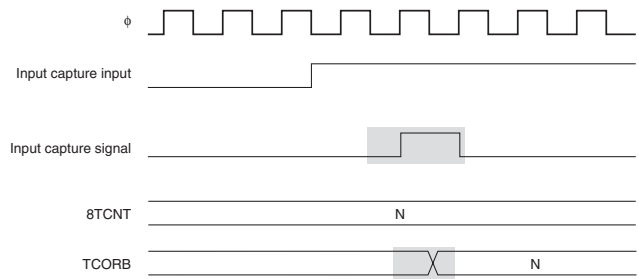
9.4.4 Timing of Status Flag Setting Figure 9.14 CMF Flag Setting Timing when Compare Match Occurs		Figure amended 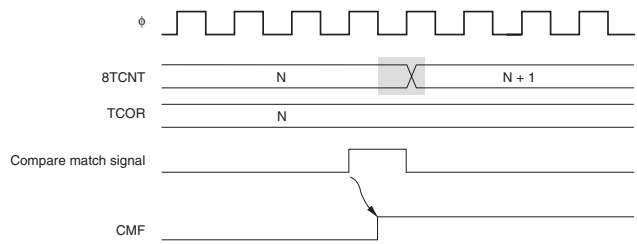
Figure 9.15 CMFB Flag Setting Timing when Input Capture Occurs	265	Figure amended 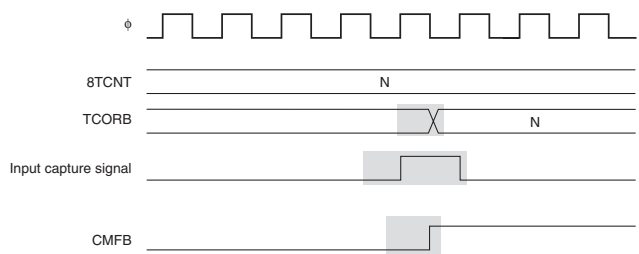
Figure 9.16 Timing of OVF Setting		Figure amended 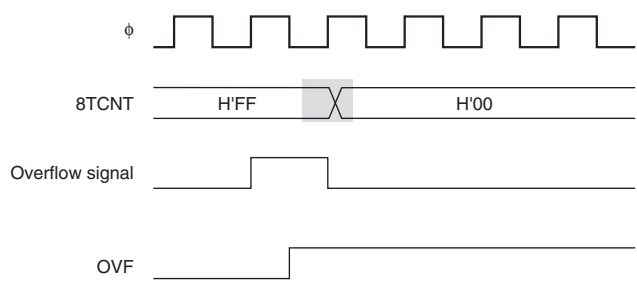

Item	Page	Revision (See Manual for Details)
9.4.5 Operation with Cascaded Connection Compare Match Count Mode	267	Description amended • Channels 0 and 1: When bits CKS2 to CKS0 are set to (100) in 8TCR1, 8TCNT1 counts channel 0 compare match A events. Channels 0 and 1 are controlled independently. CMF flag setting, interrupt generation, TMO pin output, counter clearing, and so on, is in accordance with the settings for each channel. Note: When bit ICE = 1 in 8TCSR1, the compare match register function of TCORB0 in channel 0 cannot be used. • Channels 2 and 3: When bits CKS2 to CKS0 are set to (100) in 8TCR3, 8TCNT3 counts channel 2 compare match A events. Channels 2 and 3 are controlled independently. CMF flag setting, interrupt generation, TMO pin output, counter clearing, and so on, is in accordance with the settings for each channel. Note: When bit ICE = 1 in 8TCSR3, the compare match register function of TCORB2 in channel 2 cannot be used.
9.7.1 Contention between 8TCNT Write and Clear Figure 9.18 Contention between 8TCNT Write and Clear	272	Figure amended 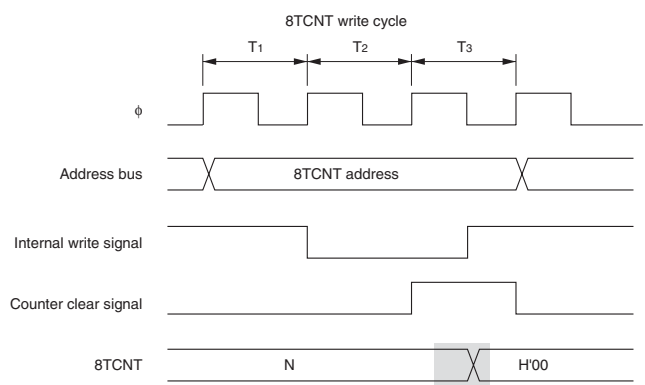

Item	Page	Revision (See Manual for Details)
9.7.2 Contention between 8TCNT Write and Increment Figure 9.19 Contention between 8TCNT Write and Increment	273	Figure amended 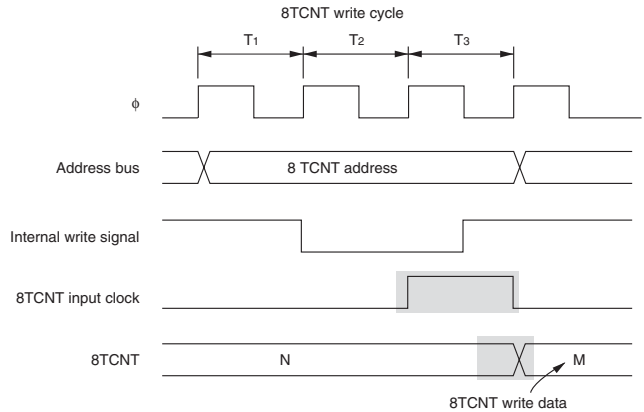
9.7.3 Contention between TCOR Write and Compare Match Figure 9.20 Contention between TCOR Write and Compare Match	274	Figure amended 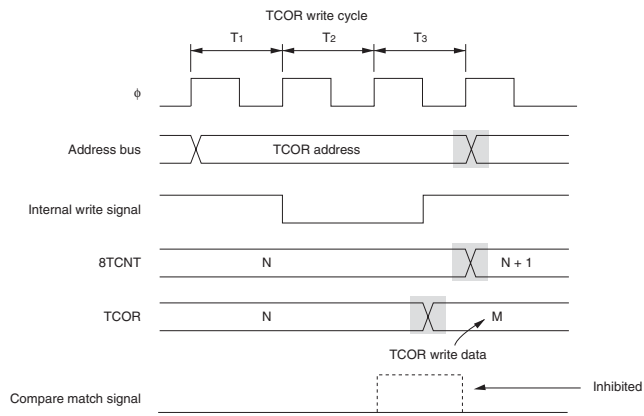

Item	Page	Revision (See Manual for Details)
9.7.4 Contention between TCOR Read and Input Capture Figure 9.21 Contention between TCOR Read and Input Capture	275	Figure amended 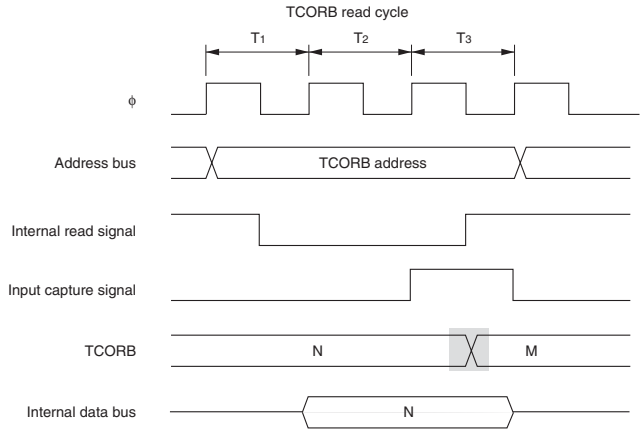
9.7.5 Contention between Counter Clearing by Input Capture and Counter Increment Figure 9.22 Contention between Counter Clearing by Input Capture and Counter Increment	276	Figure amended 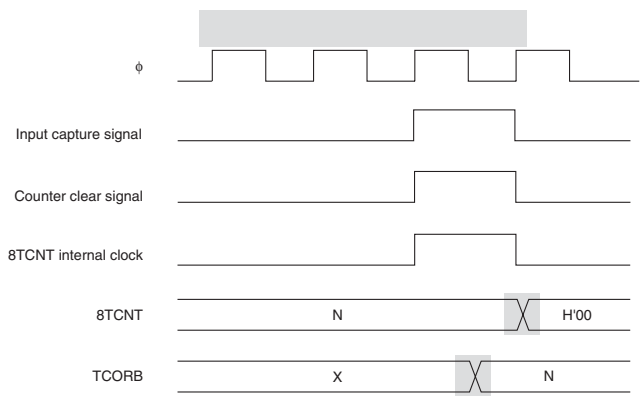

Item	Page	Revision (See Manual for Details)
9.7.6 Contention between TCOR Write and Input Capture Figure 9.23 Contention between TCOR Write and Input Capture	277	Figure amended 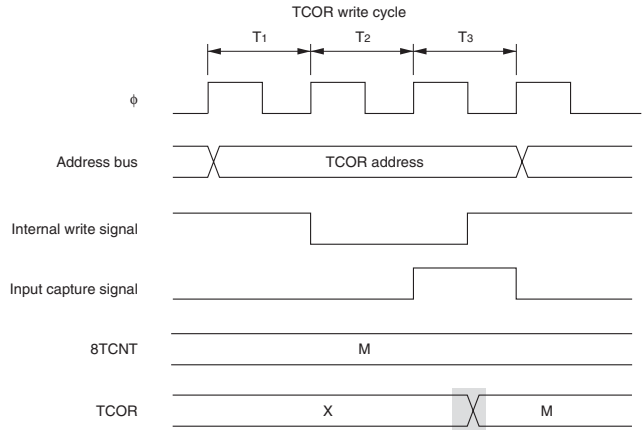
9.7.7 Contention between 8TCNT Byte Write and Increment in 16-Bit Count Mode (Cascaded Connection)	278	Description amended If an increment pulse occurs in the T_2 or T_3 state of an 8TCNT byte write cycle in 16-bit count mode, the counter write takes priority and the byte data for which the write was performed is not incremented. The byte data for which a write was not performed is incremented. Figure 9.24 shows the timing when an increment pulse occurs in the T_2 state of a byte write to 8TCNT (upper byte). If an increment pulse occurs in the T_2 state, on the other hand, the increment takes priority.
Figure 9.24 Contention between 8TCNT Byte Write and Increment in 16-Bit Count Mode		Figure amended 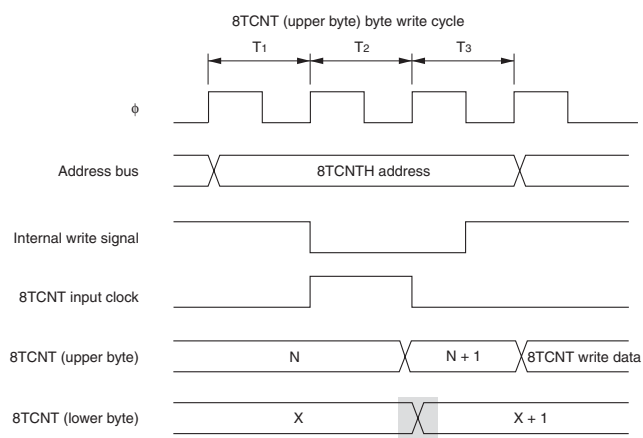

Item	Page	Revision (See Manual for Details)
12.3.2 Operation in Asynchronous Mode Figure 12.4 Sample Flowchart for SCI Initialization	356	Figure amended and note added (4) Wait for at least the interval required to transmit or receive one bit, then set the TE or RE bit to 1 in SCR*. Set the RIE, TIE, TEIE, and MPIE bits as necessary. Setting the TE or RE bit enables the SCI to use the TxD or RxD pin. Note: * In simultaneous transmitting and receiving, the TE and RE bits should be cleared to 0 or set to 1 simultaneously.
13.3.5 Clock Table 13.5 Bit Rates (bits/s) for Various BRR Settings (When n = 0)	396	Table amended

	ϕ (MHz)		
N	18.00	20.00	25.00
0	24193.5	26881.7	33602.2
1	12096.8	13440.9	16801.1
2	8064.5	8960.6	11200.7

Item	Page	Revision (See Manual for Details)
Table 13.6 BRR Settings for Typical Bit Rates (bits/s) (When n = 0)	397	Table amended

	ϕ (MHz)					
	18.00		20.00		25.00	
bit/s	N	Error	N	Error	N	Error
9600	2	15.99	2	6.66	3	12.49

Item	Page	Revision (See Manual for Details)
18.4.3 Selection of Waiting Time for Exit from Software Standby Mode Table 18.3 Clock Frequency and Waiting Time for Clock to Settle	466	Table amended

DIV1	DIV0	STS2	STS1	STS0	Waiting Time	6 MHz	4 MHz	2 MHz	1MHz	Unit
0	1	0	0	0	8192 states	2.7	4.1	8.2*	16.4*	ms
		0	0	1	16384 states	5.5	8.2*	16.4	32.8	
		0	1	0	32768 states	10.9*	16.4	32.8	65.5	
		0	1	1	65536 states	21.8	32.8	65.5	131.1	
		1	0	0	131072 states	43.7	65.5	131.1	262.1	
		1	0	1	262144 states	87.4	131.1	262.1	524.3	
		1	1	0	1024 states	0.34	0.51	1.0	2.0	
		1	1	1			Illegal setting			

Item	Page	Revision (See Manual for Details)
19.2 DC Characteristics Table 19.2 DC Characteristics (2)	476	Table amended

Item		Symbol	Min	Typ	Max
Current dissipation*2	Standby mode	I_{CC}*3	—	1.0	10
			—	—	80
Analog power supply current	During A/D conversion	AI_{CC}	—	0.6	1.5
	During A/D and D/A conversion		—	0.6	1.5
	Idle		—	0.01	5.0

Item	Page	Revision (See Manual for Details)
19.3 AC Characteristics Table 19.6 Bus Timing	481, 482	Table amended

		Condition					
		A		B and C			
Item	Symbol	Min	Max	Min	Max	Unit	Test Conditions
Read data setup time	t_{RDS}	25	—	25	—	ns	Figure 19.7, figure 19.8
Read data hold time	t_{RDH}	0	—	0	—	ns	
Write data delay time	t_{WDD}	—	35	—	35	ns	
Write data setup time 1	t_{WDS1}	1.0 t_{cyc} –30	—	1.0 t_{cyc} –30	—	ns	
Write data setup time 2	t_{WDS2}	2.0 t_{cyc} –30	—	2.0 t_{cyc} –30	—	ns	
Write data hold time	t_{WDH}	0.5 t_{cyc} –15	—	0.5 t_{cyc} –15	—	ns	Figure 19.7, figure 19.8
Read data access time 1	t_{ACC1}	—	2.0 t_{cyc} –45	—	2.0 t_{cyc} –45	ns	
Read data access time 2	t_{ACC2}	—	3.0 t_{cyc} –45	—	3.0 t_{cyc} –45	ns	
Read data access time 3	t_{ACC3}	—	1.5 t_{cyc} –45	—	1.5 t_{cyc} –45	ns	
Read data access time 4	t_{ACC4}	—	2.5 t_{cyc} –45	—	2.5 t_{cyc} –45	ns	
Precharge time 1	t_{PCH1}	1.0 t_{cyc} –20	—	1.0 t_{cyc} –20	—	ns	
Precharge time 2	t_{PCH2}	0.5 t_{cyc} –20	—	0.5 t_{cyc} –20	—	ns	

19.4 A/D Conversion Characteristics Table 19.8 A/D Conversion Characteristics	486	Note added
C.7 Port B Block Diagrams Figure C.7 (a) Port B Block Diagram (Pins PB_0 and PB_2)	616	Figure amended

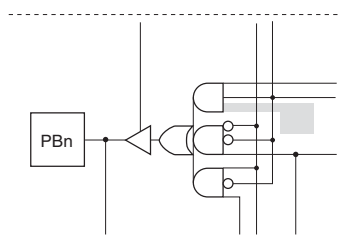

Figure C.7 (b) Port B Block Diagram (Pins PB_1 and PB_3)	617	Figure amended

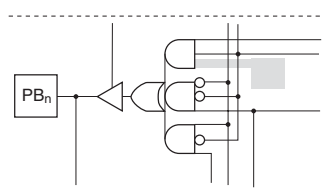

All trademarks and registered trademarks are the property of their respective owners.

Contents

Section 1 Overview 1
1.1 Overview 1
1.2 Block Diagram 5
1.3 Pin Description 6
1.3.1 Pin Arrangement 6
1.3.2 Pin Functions 8
1.3.3 Pin Assignments in Each Mode 12

Section 2 CPU 17
2.1 Overview 17
2.1.1 Features 17
2.1.2 Differences from H8/300 CPU 18
2.2 CPU Operating Modes 18
2.3 Address Space 19
2.4 Register Configuration 20
2.4.1 Overview 20
2.4.2 General Registers 21
2.4.3 Control Registers 22
2.4.4 Initial CPU Register Values 23
2.5 Data Formats 24
2.5.1 General Register Data Formats 24
2.5.2 Memory Data Formats 25
2.6 Instruction Set 27
2.6.1 Instruction Set Overview 27
2.6.2 Instructions and Addressing Modes 28
2.6.3 Tables of Instructions Classified by Function 29
2.6.4 Basic Instruction Formats 38
2.6.5 Notes on Use of Bit Manipulation Instructions 39
2.7 Addressing Modes and Effective Address Calculation 41
2.7.1 Addressing Modes 41
2.7.2 Effective Address Calculation 43
2.8 Processing States 47
2.8.1 Overview 47
2.8.2 Program Execution State 47
2.8.3 Exception-Handling State 48
2.8.4 Exception Handling Operation 49
2.8.5 Bus-Released State 50
2.8.6 Reset State 50

2.8.7 Power-Down State 51
2.9 Basic Operational Timing 51
2.9.1 Overview 51
2.9.2 On-Chip Memory Access Timing 51
2.9.3 On-Chip Supporting Module Access Timing 52
2.9.4 Access to External Address Space 53

Section 3 MCU Operating Modes 55
3.1 Overview 55
3.1.1 Operating Mode Selection 55
3.1.2 Register Configuration 56
3.2 Mode Control Register (MDCR) 56
3.3 System Control Register (SYSCR) 57
3.4 Operating Mode Descriptions 60
3.4.1 Mode 1 60
3.4.2 Mode 2 60
3.4.3 Mode 3 60
3.4.4 Mode 4 60
3.4.5 Modes 5 to 7 60
3.5 Pin Functions in Each Operating Mode 61
3.6 Memory Map in Each Operating Mode 62
3.6.1 Reserved Areas 62

Section 4 Exception Handling 65
4.1 Overview 65
4.1.1 Exception Handling Types and Priority 65
4.1.2 Exception Handling Operation 65
4.1.3 Exception Vector Table 66
4.2 Reset 68
4.2.1 Overview 68
4.2.2 Reset Sequence 68
4.2.3 Interrupts after Reset 70
4.3 Interrupts 71
4.4 Trap Instruction 71
4.5 Stack Status after Exception Handling 72
4.6 Notes on Stack Usage 73

Section 5 Interrupt Controller 75
5.1 Overview 75
5.1.1 Features 75

5.1.2 Block Diagram 76
5.1.3 Pin Configuration 77
5.1.4 Register Configuration 77
5.2 Register Descriptions 78
5.2.1 System Control Register (SYSCR) 78
5.2.2 Interrupt Priority Registers A and B (IPRA, IPRB) 79
5.2.3 IRQ Status Register (ISR) 84
5.2.4 IRQ Enable Register (IER) 85
5.2.5 IRQ Sense Control Register (ISCR) 86
5.3 Interrupt Sources 87
5.3.1 External Interrupts 87
5.3.2 Internal Interrupts 88
5.3.3 Interrupt Exception Handling Vector Table 88
5.4 Interrupt Operation 92
5.4.1 Interrupt Handling Process 92
5.4.2 Interrupt Exception Handling Sequence 97
5.4.3 Interrupt Response Time 98
5.5 Usage Notes 99
5.5.1 Contention between Interrupt and Interrupt-Disabling Instruction 99
5.5.2 Instructions that Inhibit Interrupts 100
5.5.3 Interrupts during EEPMOV Instruction Execution 100

Section 6 Bus Controller 101
6.1 Overview 101
6.1.1 Features 101
6.1.2 Block Diagram 102
6.1.3 Pin Configuration 103
6.1.4 Register Configuration 104
6.2 Register Descriptions 104
6.2.1 Bus Width Control Register (ABWCR) 104
6.2.2 Access State Control Register (ASTCR) 105
6.2.3 Wait Control Registers H and L (WCRH, WCRL) 106
6.2.4 Bus Release Control Register (BRCR) 110
6.2.5 Bus Control Register (BCR) 111
6.2.6 Chip Select Control Register (CSCR) 114
6.2.7 Address Control Register (ADRCR) 115
6.3 Operation 116
6.3.1 Area Division 116
6.3.2 Bus Specifications 118
6.3.3 Memory Interfaces 119

6.3.4 Chip Select Signals 119
6.3.5 Address Output Method 120
6.4 Basic Bus Interface 122
6.4.1 Overview 122
6.4.2 Data Size and Data Alignment 122
6.4.3 Valid Strobes 123
6.4.4 Memory Areas 124
6.4.5 Basic Bus Control Signal Timing 125
6.4.6 Wait Control 132
6.5 Idle Cycle 134
6.5.1 Operation 134
6.5.2 Pin States in Idle Cycle 136
6.6 Bus Arbiter 137
6.6.1 Operation 137
6.7 Register and Pin Input Timing 139
6.7.1 Register Write Timing 139
6.7.2 $\overline{\text{BREQ}}$ Pin Input Timing 140

Section 7 I/O Ports 141
7.1 Overview 141
7.2 Port 4 144
7.2.1 Overview 144
7.2.2 Register Descriptions 145
7.3 Port 6 148
7.3.1 Overview 148
7.3.2 Register Descriptions 148
7.4 Port 7 151
7.4.1 Overview 151
7.4.2 Register Description 151
7.5 Port 8 152
7.5.1 Overview 152
7.5.2 Register Descriptions 153
7.6 Port 9 156
7.6.1 Overview 156
7.6.2 Register Descriptions 157
7.7 Port A 161
7.7.1 Overview 161
7.7.2 Register Descriptions 162
7.8 Port B 172
7.8.1 Overview 172

7.8.2 Register Descriptions 173

Section 8 16-Bit Timer 177
8.1 Overview 177
8.1.1 Features 177
8.1.2 Block Diagrams 179
8.1.3 Pin Configuration 182
8.1.4 Register Configuration 183
8.2 Register Descriptions 184
8.2.1 Timer Start Register (TSTR) 184
8.2.2 Timer Synchro Register (TSNC) 185
8.2.3 Timer Mode Register (TMDR) 187
8.2.4 Timer Interrupt Status Register A (TISRA) 189
8.2.5 Timer Interrupt Status Register B (TISRB) 192
8.2.6 Timer Interrupt Status Register C (TISRC) 195
8.2.7 Timer Counters (16TCNT) 197
8.2.8 General Registers (GRA, GRB) 198
8.2.9 Timer Control Registers (16TCR) 199
8.2.10 Timer I/O Control Register (TIOR) 202
8.2.11 Timer Output Level Setting Register C (TOLR) 204
8.3 CPU Interface 206
8.3.1 16-Bit Accessible Registers 206
8.3.2 8-Bit Accessible Registers 208
8.4 Operation 209
8.4.1 Overview 209
8.4.2 Basic Functions 209
8.4.3 Synchronization 217
8.4.4 PWM Mode 219
8.4.5 Phase Counting Mode 223
8.4.6 16-Bit Timer Output Timing 225
8.5 Interrupts 226
8.5.1 Setting of Status Flags 226
8.5.2 Timing of Clearing of Status Flags 228
8.5.3 Interrupt Sources 229
8.6 Usage Notes 230

Section 9 8-Bit Timers 243
9.1 Overview 243
9.1.1 Features 243
9.1.2 Block Diagram 245

9.1.3 Pin Configuration 246
9.1.4 Register Configuration 247
9.2 Register Descriptions 248
9.2.1 Timer Counters (8TCNT) 248
9.2.2 Time Constant Registers A (TCORA) 249
9.2.3 Time Constant Registers B (TCORB) 250
9.2.4 Timer Control Register (8TCR) 251
9.2.5 Timer Control/Status Registers (8TCSR) 254
9.3 CPU Interface 259
9.3.1 8-Bit Registers 259
9.4 Operation 261
9.4.1 8TCNT Count Timing 261
9.4.2 Compare Match Timing 262
9.4.3 Input Capture Signal Timing 263
9.4.4 Timing of Status Flag Setting 264
9.4.5 Operation with Cascaded Connection 265
9.4.6 Input Capture Setting 268
9.5 Interrupt 269
9.5.1 Interrupt Sources 269
9.5.2 A/D Converter Activation 270
9.6 8-Bit Timer Application Example 271
9.7 Usage Notes 272
9.7.1 Contention between 8TCNT Write and Clear 272
9.7.2 Contention between 8TCNT Write and Increment 273
9.7.3 Contention between TCOR Write and Compare Match 274
9.7.4 Contention between TCOR Read and Input Capture 275
9.7.5 Contention between Counter Clearing by Input Capture and Counter Increment 276
9.7.6 Contention between TCOR Write and Input Capture 277
9.7.7 Contention between 8TCNT Byte Write and Increment in 16-Bit Count Mode (Cascaded Connection) 278
9.7.8 Contention between Compare Matches A and B 279
9.7.9 8TCNT Operation and Internal Clock Source Switchover 279

Section 10 Programmable Timing Pattern Controller (TPC) 283
10.1 Overview 283
10.1.1 Features 283
10.1.2 Block Diagram 284
10.1.3 Pin Configuration 285
10.1.4 Register Configuration 286

10.2 Register Descriptions 287
10.2.1 Port A Data Direction Register (PADDR) 287
10.2.2 Port A Data Register (PADR) 287
10.2.3 Port B Data Direction Register (PBDDR) 288
10.2.4 Port B Data Register (PBDR) 288
10.2.5 Next Data Register A (NDRA) 289
10.2.6 Next Data Register B (NDRB) 291
10.2.7 Next Data Enable Register A (NDERA) 293
10.2.8 Next Data Enable Register B (NDERB) 294
10.2.9 TPC Output Control Register (TPCR) 295
10.2.10 TPC Output Mode Register (TPMR) 298
10.3 Operation 300
10.3.1 Overview 300
10.3.2 Output Timing 301
10.3.3 Normal TPC Output 302
10.3.4 Non-Overlapping TPC Output 304
10.3.5 TPC Output Triggering by Input Capture 306
10.4 Usage Notes 307
10.4.1 Operation of TPC Output Pins 307
10.4.2 Note on Non-Overlapping Output 307

Section 11 Watchdog Timer 309
11.1 Overview 309
11.1.1 Features 309
11.1.2 Block Diagram 310
11.1.3 Pin Configuration 310
11.1.4 Register Configuration 311
11.2 Register Descriptions 311
11.2.1 Timer Counter (TCNT) 311
11.2.2 Timer Control/Status Register (TCSR) 312
11.2.3 Reset Control/Status Register (RSTCSR) 314
11.2.4 Notes on Register Access 315
11.3 Operation 317
11.3.1 Watchdog Timer Operation 317
11.3.2 Interval Timer Operation 318
11.3.3 Timing of Setting of Overflow Flag (OVF) 318
11.3.4 Timing of Setting of Watchdog Timer Reset Bit (WRST) 319
11.4 Interrupts 320
11.5 Usage Notes 320

Section 12 Serial Communication Interface 321
12.1 Overview 321
12.1.1 Features 321
12.1.2 Block Diagram 323
12.1.3 Pin Configuration 324
12.1.4 Register Configuration 325
12.2 Register Descriptions 326
12.2.1 Receive Shift Register (RSR) 326
12.2.2 Receive Data Register (RDR) 326
12.2.3 Transmit Shift Register (TSR) 327
12.2.4 Transmit Data Register (TDR) 327
12.2.5 Serial Mode Register (SMR) 328
12.2.6 Serial Control Register (SCR) 332
12.2.7 Serial Status Register (SSR) 337
12.2.8 Bit Rate Register (BRR) 342
12.3 Operation 350
12.3.1 Overview 350
12.3.2 Operation in Asynchronous Mode 353
12.3.3 Multiprocessor Communication 362
12.3.4 Synchronous Operation 369
12.4 SCI Interrupts 377
12.5 Usage Notes 378
12.5.1 Notes on Use of SCI 378

Section 13 Smart Card Interface 383
13.1 Overview 383
13.1.1 Features 383
13.1.2 Block Diagram 384
13.1.3 Pin Configuration 385
13.1.4 Register Configuration 385
13.2 Register Descriptions 386
13.2.1 Smart Card Mode Register (SCMR) 386
13.2.2 Serial Status Register (SSR) 388
13.2.3 Serial Mode Register (SMR) 389
13.2.4 Serial Control Register (SCR) 390
13.3 Operation 391
13.3.1 Overview 391
13.3.2 Pin Connections 391
13.3.3 Data Format 392
13.3.4 Register Settings 394

13.3.5 Clock ... 396
13.3.6 Transmitting and Receiving Data ... 398
13.4 Usage Notes ... 406

Section 14 A/D Converter ... 411
14.1 Overview ... 411
14.1.1 Features ... 411
14.1.2 Block Diagram ... 412
14.1.3 Pin Configuration ... 413
14.1.4 Register Configuration ... 414
14.2 Register Descriptions ... 415
14.2.1 A/D Data Registers A to D (ADDRA to ADDRD) ... 415
14.2.2 A/D Control/Status Register (ADCSR) ... 416
14.2.3 A/D Control Register (ADCR) ... 418
14.3 CPU Interface ... 419
14.4 Operation ... 421
14.4.1 Single Mode (SCAN = 0) ... 421
14.4.2 Scan Mode (SCAN = 1) ... 423
14.4.3 Input Sampling and A/D Conversion Time ... 425
14.4.4 External Trigger Input Timing ... 427
14.5 Interrupts ... 427
14.6 Usage Notes ... 428

Section 15 D/A Converter ... 435
15.1 Overview ... 435
15.1.1 Features ... 435
15.1.2 Block Diagram ... 436
15.1.3 Pin Configuration ... 437
15.1.4 Register Configuration ... 437
15.2 Register Descriptions ... 438
15.2.1 D/A Data Registers 0 and 1 (DADR0, DADR1) ... 438
15.2.2 D/A Control Register (DACR) ... 438
15.2.3 D/A Standby Control Register (DASTCR) ... 440
15.3 Operation ... 440
15.4 D/A Output Control ... 442

Section 16 RAM ... 443
16.1 Overview ... 443
16.1.1 Block Diagram ... 444
16.1.2 Register Configuration ... 444

16.2 System Control Register (SYSCR) 445
16.3 Operation 446

Section 17 Clock Pulse Generator 447
17.1 Overview 447
17.1.1 Block Diagram 448
17.2 Oscillator Circuit 449
17.2.1 Connecting a Crystal Resonator 449
17.2.2 External Clock Input 451
17.3 Duty Adjustment Circuit 454
17.4 Prescalers 454
17.5 Frequency Divider 454
17.5.1 Register Configuration 454
17.5.2 Division Control Register (DIVCR) 455
17.5.3 Usage Notes 456

Section 18 Power-Down State 457
18.1 Overview 457
18.2 Register Configuration 459
18.2.1 System Control Register (SYSCR) 459
18.2.2 Module Standby Control Register H (MSTCRH) 461
18.2.3 Module Standby Control Register L (MSTCRL) 462
18.3 Sleep Mode 464
18.3.1 Transition to Sleep Mode 464
18.3.2 Exit from Sleep Mode 464
18.4 Software Standby Mode 464
18.4.1 Transition to Software Standby Mode 464
18.4.2 Exit from Software Standby Mode 465
18.4.3 Selection of Waiting Time for Exit from Software Standby Mode 465
18.4.4 Sample Application of Software Standby Mode 467
18.4.5 Note 467
18.5 Hardware Standby Mode 468
18.5.1 Transition to Hardware Standby Mode 468
18.5.2 Exit from Hardware Standby Mode 468
18.5.3 Timing for Hardware Standby Mode 468
18.6 Module Standby Function 469
18.6.1 Module Standby Timing 469
18.6.2 Read/Write in Module Standby 469
18.6.3 Usage Notes 469
18.7 System Clock Output Disabling Function 470

Section 19 Electrical Characteristics 471
19.1 Absolute Maximum Ratings 471
19.2 DC Characteristics 472
19.3 AC Characteristics 479
19.4 A/D Conversion Characteristics 485
19.5 D/A Conversion Characteristics 487
19.6 Operational Timing 488
19.6.1 Clock Timing 488
19.6.2 Control Signal Timing 489
19.6.3 Bus Timing 491
19.6.4 TPC and I/O Port Timing 495
19.6.5 Timer Input/Output Timing 495
19.6.6 SCI Input/Output Timing 496

Appendix A Instruction Set 497
A.1 Instruction List 497
A.2 Operation Code Maps 512
A.3 Number of States Required for Execution 515

Appendix B Internal I/O Registers 525
B.1 Address List 525
B.2 Functions 540

Appendix C I/O Port Block Diagrams 598
C.1 Port 4 Block Diagram 598
C.2 Port 6 Block Diagrams 599
C.3 Port 7 Block Diagrams 603
C.4 Port 8 Block Diagrams 604
C.5 Port 9 Block Diagrams 608
C.6 Port A Block Diagrams 614
C.7 Port B Block Diagrams 617

Appendix D Pin States 623
D.1 Port States in Each Mode 623
D.2 Pin States at Reset 626

Appendix E Timing of Transition to and Recovery from Hardware Standby Mode 628

Appendix F Product Code Lineup 629

Appendix G Package Dimensions 630

Appendix H Comparison of H8/300H Series Product Specifications..... 632
H.1 Differences between H8/3067 and H8/3062 Group, H8/3048 Group, H8/3006 and H8/3007, and H8/3008 632
H.2 Comparison of Pin Functions of 100-Pin Package Products (FP-100B, TFP-100B) 635

Figures

Section 1 Overview
Figure 1.1 Block Diagram 5
Figure 1.2 Pin Arrangement of H8/3008 (FP-100B or TFP-100B Package, Top View) 7

Section 2 CPU
Figure 2.1 CPU Operating Modes 18
Figure 2.2 Memory Map 19
Figure 2.3 CPU Registers 20
Figure 2.4 Usage of General Registers 21
Figure 2.5 Stack 22
Figure 2.6 General Register Data Formats (1) 24
Figure 2.7 General Register Data Formats (2) 25
Figure 2.8 Memory Data Formats 26
Figure 2.9 Instruction Formats 39
Figure 2.10 Memory-Indirect Branch Address Specification 43
Figure 2.11 Processing States 47
Figure 2.12 Classification of Exception Sources 48
Figure 2.13 State Transitions 49
Figure 2.14 Stack Structure after Exception Handling 50
Figure 2.15 On-Chip Memory Access Cycle 52
Figure 2.16 Pin States during On-Chip Memory Access (Address Update Mode 1) 52
Figure 2.17 Access Cycle for On-Chip Supporting Modules 53
Figure 2.18 Pin States during Access to On-Chip Supporting Modules 53

Section 3 MCU Operating Modes
Figure 3.1 Memory Map of H8/3008 in Each Operating Mode 63

Section 4 Exception Handling
Figure 4.1 Exception Sources 66
Figure 4.2 Reset Sequence (Modes 1 and 3) 69
Figure 4.3 Reset Sequence (Modes 2 and 4) 70
Figure 4.4 Interrupt Sources and Number of Interrupts 71
Figure 4.5 Stack after Completion of Exception Handling 72
Figure 4.6 Operation when SP Value is Odd 74

Section 5 Interrupt Controller
Figure 5.1 Interrupt Controller Block Diagram 76
Figure 5.2 Block Diagram of Interrupts IRQ_5 to IRQ_0 87

Figure 5.3 Timing of Setting of IRQnF 88
Figure 5.4 Process Up to Interrupt Acceptance when UE = 1 93
Figure 5.5 Interrupt Masking State Transitions (Example) 95
Figure 5.6 Process Up to Interrupt Acceptance when UE = 0 96
Figure 5.7 Interrupt Exception Handling Sequence 97
Figure 5.8 Contention between Interrupt and Interrupt-Disabling Instruction 99

Section 6 Bus Controller

Figure 6.1 Block Diagram of Bus Controller 102
Figure 6.2 Access Area Map for Each Operating Mode 116
Figure 6.3 Memory Map in 16-Mbyte Mode 117
Figure 6.4 $\overline{\text{CS}}$n Signal Output Timing (n = 0 to 7) 120
Figure 6.5 Sample Address Output in Each Address Update Mode (Basic Bus Interface, 3-State Space) 120
Figure 6.6 Example of Consecutive External Space Accesses in Address Update Mode 2 121
Figure 6.7 Access Sizes and Data Alignment Control (8-Bit Access Area) 122
Figure 6.8 Access Sizes and Data Alignment Control (16-Bit Access Area) 123
Figure 6.9 Bus Control Signal Timing for 8-Bit, Three-State-Access Area 125
Figure 6.10 Bus Control Signal Timing for 8-Bit, Two-State-Access Area 126
Figure 6.11 Bus Control Signal Timing for 16-Bit, Three-State-Access Area (1) (Byte Access to Even Address) 127
Figure 6.12 Bus Control Signal Timing for 16-Bit, Three-State-Access Area (2) (Byte Access to Odd Address) 128
Figure 6.13 Bus Control Signal Timing for 16-Bit, Three-State-Access Area (3) (Word Access) 129
Figure 6.14 Bus Control Signal Timing for 16-Bit, Two-State-Access Area (1) (Byte Access to Even Address) 130
Figure 6.15 Bus Control Signal Timing for 16-Bit, Two-State-Access Area (2) (Byte Access to Odd Address) 131
Figure 6.16 Bus Control Signal Timing for 16-Bit, Two-State-Access Area (3) (Word Access) 132
Figure 6.17 Example of Wait State Insertion Timing 133
Figure 6.18 Example of Idle Cycle Operation (ICIS1 = 1) 134
Figure 6.19 Example of Idle Cycle Operation (ICIS0 = 1) 135
Figure 6.20 Example of Idle Cycle Operation 136
Figure 6.21 Example of External Bus Master Operation 138
Figure 6.22 ASTCR Write Timing 139
Figure 6.23 DDR Write Timing 139
Figure 6.24 BRCR Write Timing 140

Section 7 I/O Ports

Figure 7.1 Port 4 Pin Configuration 144
Figure 7.2 Port 6 Pin Configuration 148
Figure 7.3 Port 7 Pin Configuration 151
Figure 7.4 Port 8 Pin Configuration 153
Figure 7.5 Port 9 Pin Configuration 156
Figure 7.6 Port A Pin Configuration 162
Figure 7.7 Port B Pin Configuration 172

Section 8 16-Bit Timer

Figure 8.1 16-bit timer Block Diagram (Overall) 179
Figure 8.2 Block Diagram of Channels 0 and 1 180
Figure 8.3 Block Diagram of Channel 2 181
Figure 8.4 16TCNT Access Operation [CPU → 16TCNT (Word)] 206
Figure 8.5 Access to Timer Counter (CPU Reads 16TCNT, Word) 206
Figure 8.6 Access to Timer Counter H (CPU Writes to 16TCNTH, Upper Byte) 207
Figure 8.7 Access to Timer Counter L (CPU Writes to 16TCNTL, Lower Byte) 207
Figure 8.8 Access to Timer Counter H (CPU Reads 16TCNTH, Upper Byte) 207
Figure 8.9 Access to Timer Counter L (CPU Reads 16TCNTL, Lower Byte) 208
Figure 8.10 16TCR Access (CPU Writes to 16TCR) 208
Figure 8.11 16TCR Access (CPU Reads 16TCR) 209
Figure 8.12 Counter Setup Procedure (Example) 210
Figure 8.13 Free-Running Counter Operation 211
Figure 8.14 Periodic Counter Operation 212
Figure 8.15 Count Timing for Internal Clock Sources 212
Figure 8.16 Count Timing for External Clock Sources (when Both Edges are Detected) 213
Figure 8.17 Setup Procedure for Waveform Output by Compare Match (Example) 213
Figure 8.18 0 and 1 Output (TOA = 1, TOB = 0) 214
Figure 8.19 Toggle Output (TOA = 1, TOB = 0) 214
Figure 8.20 Output Compare Output Timing 215
Figure 8.21 Setup Procedure for Input Capture (Example) 216
Figure 8.22 Input Capture (Example) 216
Figure 8.23 Input Capture Signal Timing 217
Figure 8.24 Setup Procedure for Synchronization (Example) 218
Figure 8.25 Synchronization (Example) 219
Figure 8.26 Setup Procedure for PWM Mode (Example) 220
Figure 8.27 PWM Mode (Example 1) 221
Figure 8.28 PWM Mode (Example 2) 222
Figure 8.29 Setup Procedure for Phase Counting Mode (Example) 223
Figure 8.30 Operation in Phase Counting Mode (Example) 224

Figure 8.31 Phase Difference, Overlap, and Pulse Width in Phase Counting Mode 224
Figure 8.32 Timing for Setting 16-Bit Timer Output Level by Writing to TOLR..... 225
Figure 8.33 Timing of Setting of IMFA and IMFB by Compare Match 226
Figure 8.34 Timing of Setting of IMFA and IMFB by Input Capture 227
Figure 8.35 Timing of Setting of OVF 228
Figure 8.36 Timing of Clearing of Status Flags 228
Figure 8.37 Contention between 16TCNT Write and Clear 230
Figure 8.38 Contention between 16TCNT Word Write and Increment..... 231
Figure 8.39 Contention between 16TCNT Byte Write and Increment 232
Figure 8.40 Contention between General Register Write and Compare Match..... 233
Figure 8.41 Contention between 16TCNT Write and Overflow..... 234
Figure 8.42 Contention between General Register Read and Input Capture 235
Figure 8.43 Contention between Counter Clearing by Input Capture and Counter Increment..... 236
Figure 8.44 Contention between General Register Write and Input Capture 237

Section 9 8-Bit Timers

Figure 9.1 Block Diagram of 8-Bit Timer Unit (Two Channels: Group 0) 245
Figure 9.2 8TCNT Access Operation (CPU Writes to 8TCNT, Word)..... 259
Figure 9.3 8TCNT Access Operation (CPU Reads 8TCNT, Word)..... 259
Figure 9.4 8TCNT0 Access Operation (CPU Writes to 8TCNT0, Upper Byte)..... 259
Figure 9.5 8TCNT1 Access Operation (CPU Writes to 8TCNT1, Lower Byte) 260
Figure 9.6 8TCNT0 Access Operation (CPU Reads 8TCNT0, Upper Byte)..... 260
Figure 9.7 8TCNT1 Access Operation (CPU Reads 8TCNT1, Lower Byte) 260
Figure 9.8 Count Timing for Internal Clock Input..... 261
Figure 9.9 Count Timing for External Clock Input (Both-Edge Detection) 262
Figure 9.10 Timing of Timer Output 262
Figure 9.11 Timing of Clear by Compare Match..... 263
Figure 9.12 Timing of Clear by Input Capture 263
Figure 9.13 Timing of Input Capture Input Signal 264
Figure 9.14 CMF Flag Setting Timing when Compare Match Occurs..... 264
Figure 9.15 CMFB Flag Setting Timing when Input Capture Occurs..... 265
Figure 9.16 Timing of OVF Setting..... 265
Figure 9.17 Example of Pulse Output..... 271
Figure 9.18 Contention between 8TCNT Write and Clear 272
Figure 9.19 Contention between 8TCNT Write and Increment..... 273
Figure 9.20 Contention between TCOR Write and Compare Match..... 274
Figure 9.21 Contention between TCOR Read and Input Capture..... 275
Figure 9.22 Contention between Counter Clearing by Input Capture and Counter Increment..... 276

Figure 9.23 Contention between TCOR Write and Input Capture 277
Figure 9.24 Contention between 8TCNT Byte Write and Increment in 16-Bit Count Mode 278

Section 10 Programmable Timing Pattern Controller (TPC)
Figure 10.1 TPC Block Diagram 284
Figure 10.2 TPC Output Operation 300
Figure 10.3 Timing of Transfer of Next Data Register Contents and Output (Example) 301
Figure 10.4 Setup Procedure for Normal TPC Output (Example) 302
Figure 10.5 Normal TPC Output Example (Five-Phase Pulse Output) 303
Figure 10.6 Setup Procedure for Non-Overlapping TPC Output (Example) 304
Figure 10.7 Non-Overlapping TPC Output Example (Four-Phase Complementary Non-Overlapping Pulse Output) 305
Figure 10.8 TPC Output Triggering by Input Capture (Example) 306
Figure 10.9 Non-Overlapping TPC Output 307
Figure 10.10 Non-Overlapping Operation and NDR Write Timing 308

Section 11 Watchdog Timer
Figure 11.1 WDT Block Diagram 310
Figure 11.2 Format of Data Written to TCNT and TCSR 315
Figure 11.3 Format of Data Written to RSTCSR 316
Figure 11.4 Operation in Watchdog Timer Mode 317
Figure 11.5 Interval Timer Operation 318
Figure 11.6 Timing of Setting of OVF 318
Figure 11.7 Timing of Setting of WRST Bit and Internal Reset 319
Figure 11.8 Contention between TCNT Write and Count up 320

Section 12 Serial Communication Interface
Figure 12.1 SCI Block Diagram 323
Figure 12.2 Data Format in Asynchronous Communication (Example: 8-Bit Data with Parity and 2 Stop Bits) 353
Figure 12.3 Phase Relationship between Output Clock and Serial Data (Asynchronous Mode) 355
Figure 12.4 Sample Flowchart for SCI Initialization 356
Figure 12.5 Sample Flowchart for Transmitting Serial Data 357
Figure 12.6 Example of SCI Transmit Operation in Asynchronous Mode (8-Bit Data with Parity and One Stop Bit) 358
Figure 12.7 Sample Flowchart for Receiving Serial Data 359
Figure 12.8 Example of SCI Receive Operation (8-Bit Data with Parity and One Stop Bit) 362

Figure 12.9 Example of Communication among Processors using Multiprocessor Format (Sending Data H'AA to Receiving Processor A) 363
Figure 12.10 Sample Flowchart for Transmitting Multiprocessor Serial Data 364
Figure 12.11 Example of SCI Transmit Operation (8-Bit Data with Multiprocessor Bit and One Stop Bit) 365
Figure 12.12 Sample Flowchart for Receiving Multiprocessor Serial Data 366
Figure 12.13 Example of SCI Receive Operation (8-Bit Data with Multiprocessor Bit and One Stop Bit) 368
Figure 12.14 Data Format in Synchronous Communication 369
Figure 12.15 Sample Flowchart for SCI Initialization 370
Figure 12.16 Sample Flowchart for Serial Transmitting 371
Figure 12.17 Example of SCI Transmit Operation 372
Figure 12.18 Sample Flowchart for Serial Receiving 373
Figure 12.19 Example of SCI Receive Operation 375
Figure 12.20 Sample Flowchart for Simultaneous Serial Transmitting and Receiving 376
Figure 12.21 Receive Data Sampling Timing in Asynchronous Mode 379
Figure 12.22 Example of Synchronous Transmission 380
Figure 12.23 Operation when Switching from SCK Pin Function to Port Pin Function 381
Figure 12.24 Operation when Switching from SCK Pin Function to Port Pin Function (Example of Preventing Low-Level Output) 382

Section 13 Smart Card Interface

Figure 13.1 Block Diagram of Smart Card Interface 384
Figure 13.2 Smart Card Interface Connection Diagram 392
Figure 13.3 Smart Card Interface Data Format 393
Figure 13.4 Timing of TEND Flag Setting 399
Figure 13.5 Sample Transmission Processing Flowchart 400
Figure 13.6 Relation Between Transmit Operation and Internal Registers 401
Figure 13.7 Timing of TEND Flag Setting 401
Figure 13.8 Sample Reception Processing Flowchart 402
Figure 13.9 Timing for Fixing Cock Output 403
Figure 13.10 Procedure for Stopping and Restarting the Clock 405
Figure 13.11 Receive Data Sampling Timing in Smart Card Interface Mode 406
Figure 13.12 Retransmission in SCI Receive Mode 408
Figure 13.13 Retransmission in SCI Transmit Mode 408

Section 14 A/D Converter

Figure 14.1 A/D Converter Block Diagram 412
Figure 14.2 A/D Data Register Access Operation (Reading H'AA40) 420
Figure 14.3 Example of A/D Converter Operation (Single Mode, Channel 1 Selected) 422

Figure 14.4 Example of A/D Converter Operation (Scan Mode, Channels AN_0 to AN_2 Selected) 424
Figure 14.5 A/D Conversion Timing 426
Figure 14.6 External Trigger Input Timing 427
Figure 14.7 Example of Analog Input Protection Circuit 429
Figure 14.8 Analog Input Pin Equivalent Circuit 429
Figure 14.9 A/D Converter Accuracy Definitions (1) 431
Figure 14.10 A/D Converter Accuracy Definitions (2) 432
Figure 14.11 Analog Input Circuit (Example) 433

Section 15 D/A Converter
Figure 15.1 D/A Converter Block Diagram 436
Figure 15.2 Example of D/A Converter Operation 441

Section 16 RAM
Figure 16.1 RAM Block Diagram 444

Section 17 Clock Pulse Generator
Figure 17.1 Block Diagram of Clock Pulse Generator 448
Figure 17.2 Connection of Crystal Resonator (Example) 449
Figure 17.3 Crystal Resonator Equivalent Circuit 450
Figure 17.4 Oscillator Circuit Block Board Design Precautions 451
Figure 17.5 External Clock Input (Examples) 451
Figure 17.6 External Clock Input Timing 453
Figure 17.7 External Clock Output Settling Delay Timing 453

Section 18 Power-Down State
Figure 18.1 NMI Timing for Software Standby Mode (Example) 467
Figure 18.2 Hardware Standby Mode Timing 469
Figure 18.3 Starting and Stopping of System Clock Output 470

Section 19 Electrical Characteristics
Figure 19.1 Darlington Pair Drive Circuit (Example) 478
Figure 19.2 Output Load Circuit 484
Figure 19.3 Oscillator Settling Timing 488
Figure 19.4 Reset Input Timing 489
Figure 19.5 Reset Output Timing 489
Figure 19.6 Interrupt Input Timing 490
Figure 19.7 Basic Bus Cycle: Two-State Access 492
Figure 19.8 Basic Bus Cycle: Three-State Access 493

Figure 19.9 Basic Bus Cycle: Three-State Access with One Wait State 494
Figure 19.10 Bus-Release Mode Timing 494
Figure 19.11 TPC and I/O Port Input/Output Timing 495
Figure 19.12 Timer Input/Output Timing 495
Figure 19.13 Timer External Clock Input Timing 496
Figure 19.14 SCI Input Clock Timing 496
Figure 19.15 SCI Input/Output Timing in Synchronous Mode 496

Appendix C I/O Port Block Diagrams

Figure C.1 Port 4 Block Diagram 598
Figure C.2 (a) Port 6 Block Diagram (Pin $P6_0$) 599
Figure C.2 (b) Port 6 Block Diagram (Pin $P6_1$) 600
Figure C.2 (c) Port 6 Block Diagram (Pin $P6_2$) 601
Figure C.2 (d) Port 6 Block Diagram (Pin $P6_7$) 602
Figure C.3 (a) Port 7 Block Diagram (Pins $P7_0$ to $P7_5$) 603
Figure C.3 (b) Port 7 Block Diagram (Pins $P7_6$ and $P7_7$) 603
Figure C.4 (a) Port 8 Block Diagram (Pin $P8_0$) 604
Figure C.4 (b) Port 8 Block Diagram (Pins $P8_1$ and $P8_2$) 605
Figure C.4 (c) Port 8 Block Diagram (Pin $P8_3$) 606
Figure C.4 (d) Port 8 Block Diagram (Pin $P8_4$) 607
Figure C.5 (a) Port 9 Block Diagram (Pin $P9_0$) 608
Figure C.5 (b) Port 9 Block Diagram (Pin $P9_1$) 609
Figure C.5 (c) Port 9 Block Diagram (Pin $P9_2$) 610
Figure C.5 (d) Port 9 Block Diagram (Pin $P9_3$) 611
Figure C.5 (e) Port 9 Block Diagram (Pin $P9_4$) 612
Figure C.5 (f) Port 9 Block Diagram (Pin $P9_5$) 613
Figure C.6 (a) Port A Block Diagram (Pins PA_0 and PA_1) 614
Figure C.6 (b) Port A Block Diagram (Pins PA_2 and PA_3) 615
Figure C.6 (c) Port A Block Diagram (Pins PA_4 to PA_7) 616
Figure C.7 (a) Port B Block Diagram (Pins PB_0 and PB_2) 617
Figure C.7 (b) Port B Block Diagram (Pins PB_1 and PB_3) 618
Figure C.7 (c) Port B Block Diagram (Pin PB_4) 619
Figure C.7 (d) Port B Block Diagram (Pin PB_5) 620
Figure C.7 (e) Port B Block Diagram (Pin PB_6) 621
Figure C.7 (f) Port B Block Diagram (Pin PB_7) 622

Appendix D Pin States

Figure D.1 Reset during Memory Access (Modes 1 and 2) 626
Figure D.2 Reset during Memory Access (Modes 3 and 4) 627

Appendix G Package Dimensions

Figure G.1 Package Dimensions (FP-100B) 630
Figure G.2 Package Dimensions (TFP-100B) 631

Tables

Section 1 Overview
Table 1.1 Features 2
Table 1.2 Comparison of H8/3008 Pin Arrangements 6
Table 1.3 Pin Functions 8
Table 1.4 Pin Assignments in Each Mode (FP-100B, TFP-100B) 12

Section 2 CPU
Table 2.1 Instruction Classification 27
Table 2.2 Instructions and Addressing Modes 28
Table 2.3 Data Transfer Instructions 30
Table 2.4 Arithmetic Operation Instructions 31
Table 2.5 Logic Operation Instructions 33
Table 2.6 Shift Instructions 33
Table 2.7 Bit Manipulation Instructions 34
Table 2.8 Branching Instructions 36
Table 2.9 System Control Instructions 37
Table 2.10 Block Transfer Instruction 38
Table 2.11 Addressing Modes 41
Table 2.12 Absolute Address Access Ranges 42
Table 2.13 Effective Address Calculation 44
Table 2.14 Exception Handling Types and Priority 48

Section 3 MCU Operating Modes
Table 3.1 Operating Mode Selection 55
Table 3.2 Registers 56
Table 3.3 Pin Functions in Each Mode 61

Section 4 Exception Handling
Table 4.1 Exception Types and Priority 65
Table 4.2 Exception Vector Table 67

Section 5 Interrupt Controller
Table 5.1 Interrupt Pins 77
Table 5.2 Interrupt Controller Registers 77
Table 5.3 Interrupt Sources, Vector Addresses, and Priority 89
Table 5.4 UE, I, and UI Bit Settings and Interrupt Handling 92
Table 5.5 Interrupt Response Time 98

Section 6 Bus Controller

Table 6.1 Bus Controller Pins 103
Table 6.2 Bus Controller Registers 104
Table 6.3 Bus Specifications for Each Area (Basic Bus Interface) 119
Table 6.4 Data Buses Used and Valid Strobes 124
Table 6.5 Pin States in Idle Cycle 136

Section 7 I/O Ports

Table 7.1 Port Functions 141
Table 7.2 Port 4 Registers 145
Table 7.3 Input Pull-Up MOS Transistor States (Port 4) 147
Table 7.4 Port 6 Registers 148
Table 7.5 Port 6 Pin Functions in Modes 1 to 4 150
Table 7.6 Port 7 Data Register 151
Table 7.7 Port 8 Registers 153
Table 7.8 Port 8 Pin Functions in Modes 1 to 4 155
Table 7.9 Port 9 Registers 157
Table 7.10 Port 9 Pin Functions 159
Table 7.11 Port A Registers 162
Table 7.12 Port A Pin Functions (Modes 1 and 2) 165
Table 7.13 Port A Pin Functions (Modes 3 and 4) 167
Table 7.14 Port A Pin Functions (Modes 1 to 4) 169
Table 7.15 Port B Registers 173
Table 7.16 Port B Pin Functions (Modes 1 to 4) 175

Section 8 16-Bit Timer

Table 8.1 16-bit timer Functions 178
Table 8.2 16-bit timer Pins 182
Table 8.3 16-bit timer Registers 183
Table 8.4 PWM Output Pins and Registers 220
Table 8.5 Up/Down Counting Conditions 224
Table 8.6 16-bit timer Interrupt Sources 229
Table 8.7 (a) 16-bit timer Operating Modes (Channel 0) 239
Table 8.7 (b) 16-bit timer Operating Modes (Channel 1) 240
Table 8.7 (c) 16-bit timer Operating Modes (Channel 2) 241

Section 9 8-Bit Timers

Table 9.1 8-Bit Timer Pins 246
Table 9.2 8-Bit Timer Registers 247
Table 9.3 Operation of Channels 0 and 1 when Bit ICE is Set to 1 in 8TCSR1 Register .. 257

Table 9.4 Operation of Channels 2 and 3 when Bit ICE is Set to 1 in 8TCSR3 Register .. 257
Table 9.5 Types of 8-Bit Timer Interrupt Sources and Priority Order 269
Table 9.6 8-Bit Timer Interrupt Sources..... 270
Table 9.7 Timer Output Priority Order..... 279
Table 9.8 Internal Clock Switchover and 8TCNT Operation 280

Section 10 Programmable Timing Pattern Controller (TPC)
Table 10.1 TPC Pins..... 285
Table 10.2 TPC Registers..... 286
Table 10.3 TPC Operating Conditions 300

Section 11 Watchdog Timer
Table 11.1 WDT Pin 310
Table 11.2 WDT Registers 311
Table 11.3 Read Addresses of TCNT, TCSR, and RSTCSR 316

Section 12 Serial Communication Interface
Table 12.1 SCI Pins..... 324
Table 12.2 SCI Registers..... 325
Table 12.3 Examples of Bit Rates and BRR Settings in Asynchronous Mode..... 343
Table 12.4 Examples of Bit Rates and BRR Settings in Synchronous Mode..... 346
Table 12.5 Maximum Bit Rates for Various Frequencies (Asynchronous Mode) 348
Table 12.6 Maximum Bit Rates with External Clock Input (Asynchronous Mode) 349
Table 12.7 Maximum Bit Rates with External Clock Input (Synchronous Mode)..... 350
Table 12.8 SMR Settings and Serial Communication Formats 352
Table 12.9 SMR and SCR Settings and SCI Clock Source Selection 352
Table 12.10 Serial Communication Formats (Asynchronous Mode) 354
Table 12.11 Receive Error Conditions 361
Table 12.12 SCI Interrupt Sources 377
Table 12.13 SSR Status Flags and Transfer of Receive Data..... 378

Section 13 Smart Card Interface
Table 13.1 Smart Card Interface Pins..... 385
Table 13.2 Smart Card Interface Registers..... 385
Table 13.3 Smart Card Interface Register Settings..... 394
Table 13.4 n-Values of CKS1 and CKS0 Settings 396
Table 13.5 Bit Rates (bits/s) for Various BRR Settings (When n = 0)..... 396
Table 13.6 BRR Settings for Typical Bit Rates (bits/s) (When n = 0) 397
Table 13.7 Maximum Bit Rates for Various Frequencies (Smart Card Interface Mode) 397
Table 13.8 Smart Card Interface Mode Operating States and Interrupt Sources..... 404

Section 14 A/D Converter

Table 14.1 A/D Converter Pins 413
Table 14.2 A/D Converter Registers 414
Table 14.3 Analog Input Channels and A/D Data Registers (ADDRA to ADDRD) 415
Table 14.4 A/D Conversion Time (Single Mode) 426
Table 14.5 Analog Input Pin Ratings 429

Section 15 D/A Converter

Table 15.1 D/A Converter Pins 437
Table 15.2 D/A Converter Registers 437

Section 16 RAM

Table 16.1 H8/3008 On-Chip RAM Specifications 443
Table 16.2 System Control Register 444

Section 17 Clock Pulse Generator

Table 17.1 (1) Damping Resistance Value 449
Table 17.1 (2) External Capacitance Values 450
Table 17.2 Crystal Resonator Parameters 450
Table 17.3 Clock Timing (Preliminary) 452
Table 17.4 Frequency Division Register 454

Section 18 Power-Down State

Table 18.1 Power-Down State and Module Standby Function 458
Table 18.2 Control Register 459
Table 18.3 Clock Frequency and Waiting Time for Clock to Settle 466
Table 18.4 ϕ Pin State in Various Operating States 470

Section 19 Electrical Characteristics

Table 19.1 Absolute Maximum Ratings 471
Table 19.2 DC Characteristics (1) 472
Table 19.2 DC Characteristics (2) 475
Table 19.3 Permissible Output Currents 477
Table 19.4 Clock Timing 479
Table 19.5 Control Signal Timing 480
Table 19.6 Bus Timing 481
Table 19.7 Timing of On-Chip Supporting Modules 483
Table 19.8 A/D Conversion Characteristics 485
Table 19.9 D/A Conversion Characteristics 487

Appendix A Instruction Set

Table A.1 Instruction Set 499
Table A.2 Operation Code Map (1) 512
Table A.2 Operation Code Map (2) 513
Table A.2 Operation Code Map (3) 514
Table A.3 Number of States per Cycle 516
Table A.4 Number of Cycles per Instruction 517

Appendix D Pin States

Table D.1 Port States 623

Appendix F Product Code Lineup

Table F.1 H8/3008 Product Code Lineup 629

Appendix H Comparison of H8/300H Series Product Specifications

Table H.1 Pin Arrangement of Each Product (FP-100B, TFP-100B) 635

Section 1 Overview

1.1 Overview

The H8/3008 is a microcontroller (MCU) that integrates system supporting functions together with an H8/300H CPU core having an original Renesas Technology architecture.

The H8/300H CPU has a 32-bit internal architecture with sixteen 16-bit general registers, and a concise, optimized instruction set designed for speed. It can address a 16-Mbyte linear address space. Its instruction set is upward-compatible at the object-code level with the H8/300 CPU, enabling easy porting of software from the H8/300 Series.

The on-chip system supporting functions include RAM, a 16-bit timer, an 8-bit timer, a programmable timing pattern controller (TPC), a watchdog timer (WDT), a serial communication interface (SCI), an A/D converter, a D/A converter, I/O ports, and other facilities.

Four MCU operating modes offer a choice of bus width and address space size. The modes (modes 1 to 4) include four expanded modes.

Table 1.1 summarizes the features of the H8/3008.

Table 1.1 Features

Feature	Description
CPU	Upward-compatible with the H8/300 CPU at the object-code level General-register machine • Sixteen 16-bit general registers (also usable as sixteen 8-bit registers plus eight 16-bit registers, or as eight 32-bit registers) High-speed operation • Maximum clock rate: 25 MHz • Add/subtract: 80 ns • Multiply/divide: 560 ns 16-Mbyte address space Instruction features • 8/16/32-bit data transfer, arithmetic, and logic instructions • Signed and unsigned multiply instructions (8 bits × 8 bits, 16 bits × 16 bits) • Signed and unsigned divide instructions (16 bits ÷ 8 bits, 32 bits ÷ 16 bits) • Bit accumulator function Bit manipulation instructions with register-indirect specification of bit positions
Memory	H8/3008 • RAM: 4 kbytes
Interrupt controller	• Seven external interrupt pins: NMI, $\overline{IRQ}_0$ to $\overline{IRQ}_5$ • 27 internal interrupts • Three selectable interrupt priority levels
Bus controller	• Address space can be partitioned into eight areas, with independent bus specifications in each area • Chip select output available for areas 0 to 7 • 8-bit access or 16-bit access selectable for each area • Two-state or three-state access selectable for each area • Selection of two wait modes • Number of program wait states selectable for each area • Bus arbitration function • Two address update modes

Feature	Description
16-bit timer, 3 channels	• Three 16-bit timer channels, capable of processing up to six pulse outputs or six pulse inputs • 16-bit timer counter (channels 0 to 2) • Two multiplexed output compare/input capture pins (channels 0 to 2) • Operation can be synchronized (channels 0 to 2) • PWM mode available (channels 0 to 2) • Phase counting mode available (channel 2)
8-bit timer, 4 channels	• 8-bit up-counter (external event count capability) • Two time constant registers • Two channels can be connected
Programmable timing pattern controller (TPC)	• Maximum 16-bit pulse output, using 16-bit timer as time base • Up to four 4-bit pulse output groups (or one 16-bit group, or two 8-bit groups) • Non-overlap mode available
Watchdog timer (WDT), 1 channel	• Internal reset signal can be generated by overflow • Reset signal can be output externally • Usable as an interval timer
Serial communication interface (SCI), 2 channels	• Selection of asynchronous or synchronous mode • Full duplex: can transmit and receive simultaneously • On-chip baud-rate generator • Smart card interface functions added
A/D converter	• Resolution: 10 bits • Eight channels, with selection of single or scan mode • Variable analog conversion voltage range • Sample-and-hold function • A/D conversion can be started by an external trigger or 8-bit timer compare-match
D/A converter	• Resolution: 8 bits • Two channels • D/A outputs can be sustained in software standby mode
I/O ports	• 35 input/output pins • 12 input-only pins

Feature	Description
Operating modes	Four MCU operating modes

Mode	Address Space	Address Pins	Initial Bus Width	Max. Bus Width
Mode 1	1 Mbyte	A_{19} to A_0	8 bits	16 bits
Mode 2	1 Mbyte	A_{19} to A_0	16 bits	16 bits
Mode 3	16 Mbytes	A_{23} to A_0	8 bits	16 bits
Mode 4	16 Mbytes	A_{23} to A_0	16 bits	16 bits

- On-chip ROM is disabled in modes 1 to 4

Power-down state

- Sleep mode
- Software standby mode
- Hardware standby mode
- Module standby function
- Programmable system clock frequency division

Other features

- On-chip clock pulse generator

Product lineup

Product Type		Model	Package (Package Code)
H8/3008	5 V operation	HD6413008F	100-pin QFP (FP-100B)
		HD6413008TE	100-pin TQFP (TFP-100B)
	3 V operation	HD6413008VF	100-pin QFP (FP-100B)
		HD6413008VTE	100-pin TQFP (TFP-100B)

1.2 Block Diagram

Figure 1.1 shows an internal block diagram.

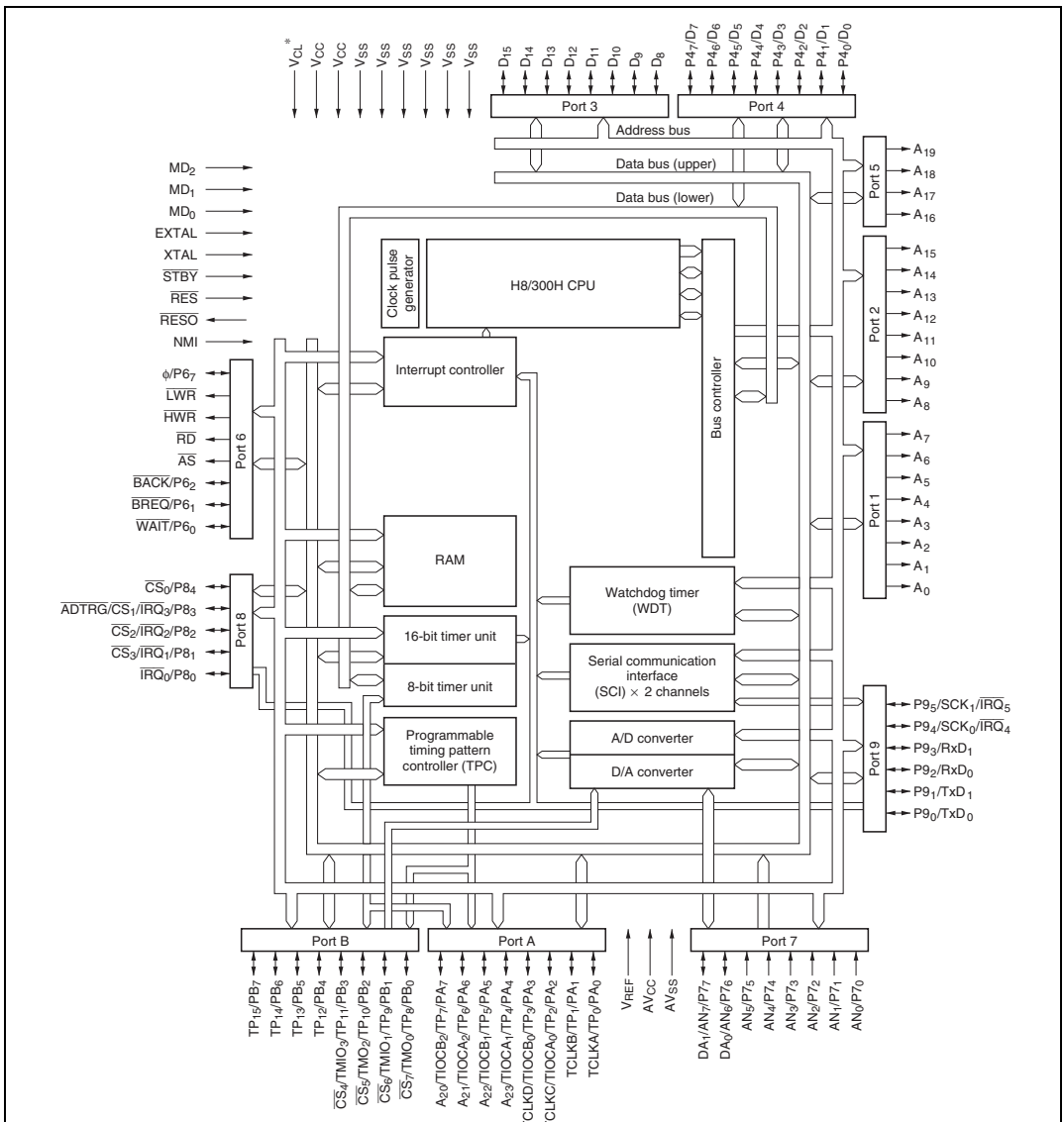

Note: * The 5 V operation models have a V_{CL} pin, and require the connection of an external capacitor.

Figure 1.1 Block Diagram

1.3 Pin Description

1.3.1 Pin Arrangement

The pin arrangement of the H8/3008 is shown in figures 1.2 and 1.3. Differences in the H8/3008 pin arrangements are shown in table 1.2. Except for the differences shown in table 1.2, the pin arrangements are the same.

Table 1.2 Comparison of H8/3008 Pin Arrangements

Package	Pin Number	H8/3064 F-ZTAT B-Mask Version	H8/3026 F-ZTAT	H8/3062 F-ZTAT B-Mask Version	H8/3024 F-ZTAT	H8/3008 ROMless	
		Operation Model					
		5 V	3 V	5 V	3 V	5 V	3 V
FP-100B (TFP-100B)	1	V_{CL}	V_{CC}	V_{CL}	V_{CC}	V_{CL}	V_{CC}
	10	FWE	FWE	FWE	FWE	$\overline{RESO}$	$\overline{RESO}$

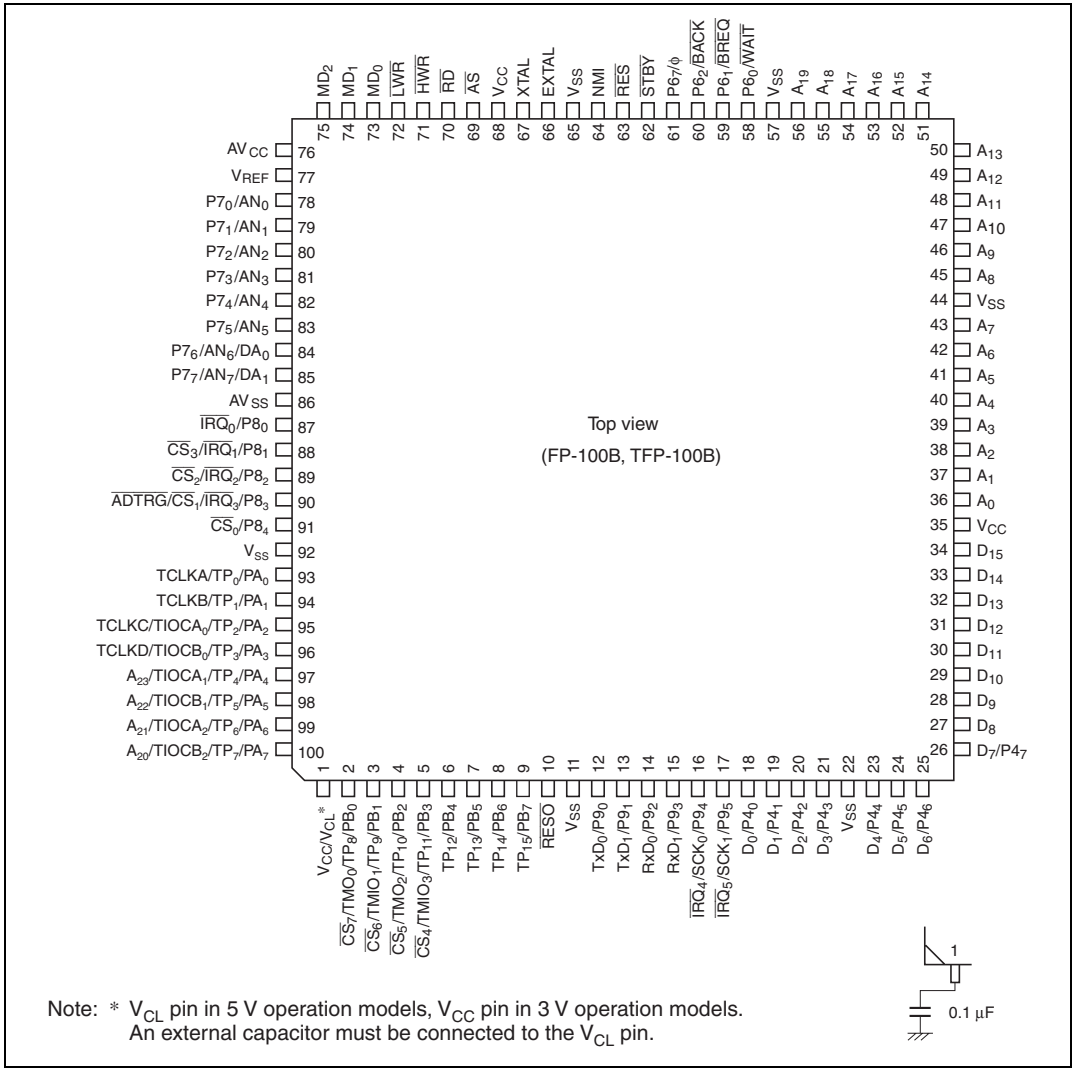

Note: * V_{CL} pin in 5 V operation models, V_{CC} pin in 3 V operation models.
An external capacitor must be connected to the V_{CL} pin.

Figure 1.2 Pin Arrangement of H8/3008 (FP-100B or TFP-100B Package, Top View)

1.3.2 Pin Functions

Table 1.3 summarizes the pin functions. The 5 V operation models have a V_{CL} pin, and require the connection of an external capacitor.

Table 1.3 Pin Functions

Type	Symbol	Pin No. FP-100B TFP-100B	I/O	Name and Function
Power	V_{CC}	1*, 35, 68	Input	**Power:** For connection to the power supply. Connect all V_{CC} pins to the system power supply.
	V_{SS}	11, 22, 44, 57, 65, 92	Input	**Ground:** For connection to ground (0 V). Connect all V_{SS} pins to the 0-V system power supply.
Internal step-down pin	V_{CL}	1*	Output	Connect an external capacitor between this pin and GND (0 V). Do not connect to V_{CC}. V_{CL} — 0.1 µF
Clock	XTAL	67	Input	For connection to a crystal resonator. For examples of crystal resonator and external clock input, see section 20, Clock Pulse Generator.
	EXTAL	66	Input	For connection to a crystal resonator or input of an external clock signal. For examples of crystal resonator and external clock input, see section 20, Clock Pulse Generator.
	ϕ	61	Output	**System clock:** Supplies the system clock to external devices.
Operating mode control	MD_2 to MD_0	75 to 73	Input	**Mode 2 to mode 0:** For setting the operating mode, as follows. Inputs at these pins must not be changed during operation.

MD_2	MD_1	MD_0	Operating Mode
0	0	0	Setting prohibited
0	0	1	Mode 1
0	1	0	Mode 2
0	1	1	Mode 3
1	0	0	Mode 4
1	0	1	Setting prohibited
1	1	0	Setting prohibited
1	1	1	Setting prohibited

Type	Symbol	Pin No. FP-100B TFP-100B	I/O	Name and Function
System control	$\overline{RES}$	63	Input	**Reset input:** When driven low, this pin resets the chip. This pin must be driven low at power-up.
	$\overline{RESO}$	10	Output	**Reset output:** Outputs the reset signal generated by the watchdog timer to external devices
	$\overline{STBY}$	62	Input	**Standby:** When driven low, this pin forces a transition to hardware standby mode
	$\overline{BREQ}$	59	Input	**Bus request:** Used by an external bus master to request the bus right
	$\overline{BACK}$	60	Output	**Bus request acknowledge:** Indicates that the bus has been granted to an external bus master
Interrupts	NMI	64	Input	**Nonmaskable interrupt:** Requests a nonmaskable interrupt
	$\overline{IRQ}_5$ to $\overline{IRQ}_0$	17, 16, 90 to 87	Input	**Interrupt request 5 to 0:** Maskable interrupt request pins
Address bus	A_{23} to A_0	97 to 100, 56 to 45, 43 to 36	Output	**Address bus:** Outputs address signals
Data bus	D_{15} to D_0	34 to 23, 21 to 18	Input/ output	**Data bus:** Bidirectional data bus
Bus control	$\overline{CS}_7$ to $\overline{CS}_0$	2 to 5, 88 to 91	Output	**Chip select:** Select signals for areas 7 to 0
	$\overline{AS}$	69	Output	**Address strobe:** Goes low to indicate valid address output on the address bus
	$\overline{RD}$	70	Output	**Read:** Goes low to indicate reading from the external address space
	$\overline{HWR}$	71	Output	**High write:** Goes low to indicate writing to the external address space; indicates valid data on the upper data bus (D_{15} to D_8).
	$\overline{LWR}$	72	Output	**Low write:** Goes low to indicate writing to the external address space; indicates valid data on the lower data bus (D_7 to D_0).
	$\overline{WAIT}$	58	Input	**Wait:** Requests insertion of wait states in bus cycles during access to the external address space

Type	Symbol	Pin No. FP-100B TFP-100B	I/O	Name and Function
16-bit timer	TCLKD to TCLKA	96 to 93	Input	**Clock input D to A:** External clock inputs
	$TIOCA_2$ to $TIOCA_0$	99, 97, 95	Input/ output	**Input capture/output compare A2 to A0:** GRA2 to GRA0 output compare or input capture, or PWM output
	$TIOCB_2$ to $TIOCB_0$	100, 98, 96	Input/ output	**Input capture/output compare B2 to B0:** GRB2 to GRB0 output compare or input capture
8-bit timer	TMO_0, TMO_2	2, 4	Output	**Compare match output:** Compare match output pins
	$TMIO_1$, $TMIO_3$	3, 5	Input/ output	**Input capture input/compare match output:** Input capture input or compare match output pins
	TCLKD to TCLKA	96 to 93	Input	**Counter external clock input:** These pins input an external clock to the counters.
Program-mable timing pattern controller (TPC)	TP_{15} to TP_0	9 to 2, 100 to 93	Output	**TPC output 15 to 0:** Pulse output
Serial com-munication interface (SCI)	TxD_1, TxD_0	13, 12	Output	**Transmit data (channels 0, 1):** SCI data output
	RxD_1, RxD_0	15, 14	Input	**Receive data (channels 0, 1):** SCI data input
	SCK_1, SCK_0	17, 16	Input/ output	**Serial clock (channels 0, 1):** SCI clock input/output
A/D converter	AN_7 to AN_0	85 to 78	Input	**Analog 7 to 0:** Analog input pins
	$\overline{ADTRG}$	90	Input	**A/D conversion external trigger input:** External trigger input for starting A/D conversion
D/A converter	DA_1, DA_0	85, 84	Output	**Analog output:** Analog output from the D/A converter

Type	Symbol	Pin No. FP-100B TFP-100B	I/O	Name and Function
Analog power supply	AV_{CC}	76	Input	Power supply pin for the A/D and D/A converters. Connect to the system power supply when not using the A/D and D/A converters.
	AV_{SS}	86	Input	Ground pin for the A/D and D/A converters. Connect to system ground (0 V).
	V_{REF}	77	Input	Reference voltage input pin for the A/D and D/A converters. Connect to the system power supply when not using the A/D and D/A converters.
I/O ports	$P4_7$ to $P4_0$	26 to 23, 21 to 18	Input/ output	**Port 4:** Eight input/output pins. The direction of each pin can be selected in the port 4 data direction register (P4DDR).
	$P6_7$, $P6_5$ to $P6_0$	61, 60 to 58	Input/ output	**Port 6:** Eight input/output pins. The direction of each pin can be selected in the port 6 data direction register (P6DDR).
	$P7_7$ to $P7_0$	85 to 78	Input	**Port 7:** Eight input pins
	$P8_4$ to $P8_0$	91 to 87	Input/ output	**Port 8:** Five input/output pins. The direction of each pin can be selected in the port 8 data direction register (P8DDR).
	$P9_5$ to $P9_0$	17 to 12	Input/ output	**Port 9:** Six input/output pins. The direction of each pin can be selected in the port 9 data direction register (P9DDR).
	PA_7 to PA_0	100 to 93	Input/ output	**Port A:** Eight input/output pins. The direction of each pin can be selected in the port A data direction register (PADDR).
	PB_7 to PB_0	9 to 2	Input/ output	**Port B:** Eight input/output pins. The direction of each pin can be selected in the port B data direction register (PBDDR).

Note: * In 5 V operation models. This is a V_{CC} pin in 3 V operation models.

1.3.3 Pin Assignments in Each Mode

Table 1.4 lists the pin assignments in each mode.

Table 1.4 Pin Assignments in Each Mode (FP-100B, TFP-100B)

Pin No.	Pin Name			
FP-100B TFP-100B	Mode 1	Mode 2	Mode 3	Mode 4
1	V_{CC} (V_{CL})*3	V_{CC} (V_{CL})*3	V_{CC} (V_{CL})*3	V_{CC} (V_{CL})*3
2	$PB_0/TP_8/TMO_0/\overline{CS}_7$	$PB_0/TP_8/TMO_0/\overline{CS}_7$	$PB_0/TP_8/TMO_0/\overline{CS}_7$	$PB_0/TP_8/TMO_0/\overline{CS}_7$
3	$PB_1/TP_9/TMIO_1/\overline{CS}_6$	$PB_1/TP_9/TMIO_1/\overline{CS}_6$	$PB_1/TP_9/TMIO_1/\overline{CS}_6$	$PB_1/TP_9/TMIO_1/\overline{CS}_6$
4	$PB_2/TP_{10}/TMO_2/\overline{CS}_5$	$PB_2/TP_{10}/TMO_2/\overline{CS}_5$	$PB_2/TP_{10}/TMO_2/\overline{CS}_5$	$PB_2/TP_{10}/TMO_2/\overline{CS}_5$
5	$PB_3/TP_{11}/TMIO_3/\overline{CS}_4$	$PB_3/TP_{11}/TMIO_3/\overline{CS}_4$	$PB_3/TP_{11}/TMIO_3/\overline{CS}_4$	$PB_3/TP_{11}/TMIO_3/\overline{CS}_4$
6	PB_4/TP_{12}	PB_4/TP_{12}	PB_4/TP_{12}	PB_4/TP_{12}
7	PB_5/TP_{13}	PB_5/TP_{13}	PB_5/TP_{13}	PB_5/TP_{13}
8	PB_6/TP_{14}	PB_6/TP_{14}	PB_6/TP_{14}	PB_6/TP_{14}
9	PB_7/TP_{15}	PB_7/TP_{15}	PB_7/TP_{15}	PB_7/TP_{15}
10	$\overline{RESO}$	$\overline{RESO}$	$\overline{RESO}$	$\overline{RESO}$
11	V_{SS}	V_{SS}	V_{SS}	V_{SS}
12	$P9_0/TxD_0$	$P9_0/TxD_0$	$P9_0/TxD_0$	$P9_0/TxD_0$
13	$P9_1/TxD_1$	$P9_1/TxD_1$	$P9_1/TxD_1$	$P9_1/TxD_1$
14	$P9_2/RxD_0$	$P9_2/RxD_0$	$P9_2/RxD_0$	$P9_2/RxD_0$
15	$P9_3/RxD_1$	$P9_3/RxD_1$	$P9_3/RxD_1$	$P9_3/RxD_1$
16	$P9_4/SCK_0/\overline{IRQ}_4$	$P9_4/SCK_0/\overline{IRQ}_4$	$P9_4/SCK_0/\overline{IRQ}_4$	$P9_4/SCK_0/\overline{IRQ}_4$
17	$P9_5/SCK_1/\overline{IRQ}_5$	$P9_5/SCK_1/\overline{IRQ}_5$	$P9_5/SCK_1/\overline{IRQ}_5$	$P9_5/SCK_1/\overline{IRQ}_5$
18	$P4_0/D_0$*1	$P4_0/D_0$*2	$P4_0/D_0$*1	$P4_0/D_0$*2
19	$P4_1/D_1$*1	$P4_1/D_1$*2	$P4_1/D_1$*1	$P4_1/D_1$*2
20	$P4_2/D_2$*1	$P4_2/D_2$*2	$P4_2/D_2$*1	$P4_2/D_2$*2
21	$P4_3/D_3$*1	$P4_3/D_3$*2	$P4_3/D_3$*1	$P4_3/D_3$*2
22	V_{SS}	V_{SS}	V_{SS}	V_{SS}
23	$P4_4/D_4$*1	$P4_4/D_4$*2	$P4_4/D_4$*1	$P4_4/D_4$*2
24	$P4_5/D_5$*1	$P4_5/D_5$*2	$P4_5/D_5$*1	$P4_5/D_5$*2
25	$P4_6/D_6$*1	$P4_6/D_6$*2	$P4_6/D_6$*1	$P4_6/D_6$*2
26	$P4_7/D_7$*1	$P4_7/D_7$*2	$P4_7/D_7$*1	$P4_7/D_7$*2
27	D_8	D_8	D_8	D_8

Pin No.	Pin Name			
FP-100B TFP-100B	Mode 1	Mode 2	Mode 3	Mode 4
28	D_9	D_9	D_9	D_9
29	D_{10}	D_{10}	D_{10}	D_{10}
30	D_{11}	D_{11}	D_{11}	D_{11}
31	D_{12}	D_{12}	D_{12}	D_{12}
32	D_{13}	D_{13}	D_{13}	D_{13}
33	D_{14}	D_{14}	D_{14}	D_{14}
34	D_{15}	D_{15}	D_{15}	D_{15}
35	V_{CC}	V_{CC}	V_{CC}	V_{CC}
36	A_0	A_0	A_0	A_0
37	A_1	A_1	A_1	A_1
38	A_2	A_2	A_2	A_2
39	A_3	A_3	A_3	A_3
40	A_4	A_4	A_4	A_4
41	A_5	A_5	A_5	A_5
42	A_6	A_6	A_6	A_6
43	A_7	A_7	A_7	A_7
44	V_{SS}	V_{SS}	V_{SS}	V_{SS}
45	A_8	A_8	A_8	A_8
46	A_9	A_9	A_9	A_9
47	A_{10}	A_{10}	A_{10}	A_{10}
48	A_{11}	A_{11}	A_{11}	A_{11}
49	A_{12}	A_{12}	A_{12}	A_{12}
50	A_{13}	A_{13}	A_{13}	A_{13}
51	A_{14}	A_{14}	A_{14}	A_{14}
52	A_{15}	A_{15}	A_{15}	A_{15}
53	A_{16}	A_{16}	A_{16}	A_{16}
54	A_{17}	A_{17}	A_{17}	A_{17}
55	A_{18}	A_{18}	A_{18}	A_{18}
56	A_{19}	A_{19}	A_{19}	A_{19}
57	V_{SS}	V_{SS}	V_{SS}	V_{SS}
58	$P6_0/\overline{WAIT}$	$P6_0/\overline{WAIT}$	$P6_0/\overline{WAIT}$	$P6_0/\overline{WAIT}$

Pin No.	Pin Name			
FP-100B TFP-100B	Mode 1	Mode 2	Mode 3	Mode 4
59	$P6_1/\overline{BREQ}$	$P6_1/\overline{BREQ}$	$P6_1/\overline{BREQ}$	$P6_1/\overline{BREQ}$
60	$P6_2/\overline{BACK}$	$P6_2/\overline{BACK}$	$P6_2/\overline{BACK}$	$P6_2/\overline{BACK}$
61	ϕ	ϕ	ϕ	ϕ
62	$\overline{STBY}$	$\overline{STBY}$	$\overline{STBY}$	$\overline{STBY}$
63	$\overline{RES}$	$\overline{RES}$	$\overline{RES}$	$\overline{RES}$
64	NMI	NMI	NMI	NMI
65	V_{SS}	V_{SS}	V_{SS}	V_{SS}
66	EXTAL	EXTAL	EXTAL	EXTAL
67	XTAL	XTAL	XTAL	XTAL
68	V_{CC}	V_{CC}	V_{CC}	V_{CC}
69	$\overline{AS}$	$\overline{AS}$	$\overline{AS}$	$\overline{AS}$
70	$\overline{RD}$	$\overline{RD}$	$\overline{RD}$	$\overline{RD}$
71	$\overline{HWR}$	$\overline{HWR}$	$\overline{HWR}$	$\overline{HWR}$
72	$\overline{LWR}$	$\overline{LWR}$	$\overline{LWR}$	$\overline{LWR}$
73	MD_0	MD_0	MD_0	MD_0
74	MD_1	MD_1	MD_1	MD_1
75	MD_2	MD_2	MD_2	MD_2
76	AV_{CC}	AV_{CC}	AV_{CC}	AV_{CC}
77	V_{REF}	V_{REF}	V_{REF}	V_{REF}
78	$P7_0/AN_0$	$P7_0/AN_0$	$P7_0/AN_0$	$P7_0/AN_0$
79	$P7_1/AN_1$	$P7_1/AN_1$	$P7_1/AN_1$	$P7_1/AN_1$
80	$P7_2/AN_2$	$P7_2/AN_2$	$P7_2/AN_2$	$P7_2/AN_2$
81	$P7_3/AN_3$	$P7_3/AN_3$	$P7_3/AN_3$	$P7_3/AN_3$
82	$P7_4/AN_4$	$P7_4/AN_4$	$P7_4/AN_4$	$P7_4/AN_4$
83	$P7_5/AN_5$	$P7_5/AN_5$	$P7_5/AN_5$	$P7_5/AN_5$
84	$P7_6/AN_6/DA_0$	$P7_6/AN_6/DA_0$	$P7_6/AN_6/DA_0$	$P7_6/AN_6/DA_0$
85	$P7_7/AN_7/DA_1$	$P7_7/AN_7/DA_1$	$P7_7/AN_7/DA_1$	$P7_7/AN_7/DA_1$
86	AV_{SS}	AV_{SS}	AV_{SS}	AV_{SS}
87	$P8_0/\overline{IRQ_0}$	$P8_0/\overline{IRQ_0}$	$P8_0/\overline{IRQ_0}$	$P8_0/\overline{IRQ_0}$
88	$P8_1/\overline{IRQ_1}/\overline{CS_3}$	$P8_1/\overline{IRQ_1}/\overline{CS_3}$	$P8_1/\overline{IRQ_1}/\overline{CS_3}$	$P8_1/\overline{IRQ_1}/\overline{CS_3}$
89	$P8_2/\overline{IRQ_2}/\overline{CS_2}$	$P8_2/\overline{IRQ_2}/\overline{CS_2}$	$P8_2/\overline{IRQ_2}/\overline{CS_2}$	$P8_2/\overline{IRQ_2}/\overline{CS_2}$

Pin No.	Pin Name			
FP-100B TFP-100B	Mode 1	Mode 2	Mode 3	Mode 4
90	$P8_3/\overline{IRQ_3}/\overline{CS_1}/\overline{ADTRG}$	$P8_3/\overline{IRQ_3}/\overline{CS_1}/\overline{ADTRG}$	$P8_3/\overline{IRQ_3}/\overline{CS_1}/\overline{ADTRG}$	$P8_3/\overline{IRQ_3}/\overline{CS_1}/\overline{ADTRG}$
91	$P8_4/\overline{CS_0}$	$P8_4/\overline{CS_0}$	$P8_4/\overline{CS_0}$	$P8_4/\overline{CS_0}$
92	V_{SS}	V_{SS}	V_{SS}	V_{SS}
93	PA_0/TP_0/TCLKA	PA_0/TP_0/TCLKA	PA_0/TP_0/TCLKA	PA_0/TP_0/TCLKA
94	PA_1/TP_1/TCLKB	PA_1/TP_1/TCLKB	PA_1/TP_1/TCLKB	PA_1/TP_1/TCLKB
95	$PA_2/TP_2/TIOCA_0$/ TCLKC	$PA_2/TP_2/TIOCA_0$/ TCLKC	$PA_2/TP_2/TIOCA_0$/ TCLKC	$PA_2/TP_2/TIOCA_0$/ TCLKC
96	$PA_3/TP_3/TIOCB_0$/ TCLKD	$PA_3/TP_3/TIOCB_0$/ TCLKD	$PA_3/TP_3/TIOCB_0$/ TCLKD	$PA_3/TP_3/TIOCB_0$/ TCLKD
97	$PA_4/TP_4/TIOCA_1$	$PA_4/TP_4/TIOCA_1$	$PA_4/TP_4/TIOCA_1/A_{23}$	$PA_4/TP_4/TIOCA_1/A_{23}$
98	$PA_5/TP_5/TIOCB_1$	$PA_5/TP_5/TIOCB_1$	$PA_5/TP_5/TIOCB_1/A_{22}$	$PA_5/TP_5/TIOCB_1/A_{22}$
99	$PA_6/TP_6/TIOCA_2$	$PA_6/TP_6/TIOCA_2$	$PA_6/TP_6/TIOCA_2/A_{21}$	$PA_6/TP_6/TIOCA_2/A_{21}$
100	$PA_7/TP_7/TIOCB_2$	$PA_7/TP_7/TIOCB_2$	A_{20}	A_{20}

Notes: 1. In modes 1 and 3 the $P4_0$ to $P4_7$ functions of pins $P4_0/D_0$ to $P4_7/D_7$ are selected after a reset, but they can be changed by software.

2. In modes 2 and 4 the D_0 to D_7 functions of pins $P4_0/D_0$ to $P4_7/D_7$ are selected after a reset, but they can be changed by software.

3. This pin functions as V_{CL} in 5 V operation models, and as V_{CC} in 3 V operation models.

Section 2 CPU

2.1 Overview

The H8/300H CPU is a high-speed central processing unit with an internal 32-bit architecture that is upward-compatible with the H8/300 CPU. The H8/300H CPU has sixteen 16-bit general registers, can address a 16-Mbyte linear address space, and is ideal for realtime control.

2.1.1 Features

The H8/300H CPU has the following features.

- Upward compatibility with H8/300 CPU
  Can execute H8/300 Series object programs
- General-register architecture
  Sixteen 16-bit general registers (also usable as sixteen 8-bit registers or eight 32-bit registers)
- 64 basic instructions
  — 8/16/32-bit arithmetic and logic instructions
  — Multiply and divide instructions
  — Powerful bit-manipulation instructions
- Eight addressing modes
  — Register direct [Rn]
  — Register indirect [@ERn]
  — Register indirect with displacement [@(d:16, ERn) or @(d:24, ERn)]
  — Register indirect with post-increment or pre-decrement [@ERn+ or @–ERn]
  — Absolute address [@aa:8, @aa:16, or @aa:24]
  — Immediate [#xx:8, #xx:16, or #xx:32]
  — Program-counter relative [@(d:8, PC) or @(d:16, PC)]
  — Memory indirect [@@aa:8]
- 16-Mbyte linear address space
- High-speed operation
  — All frequently-used instructions execute in two to four states
  — Maximum clock frequency: 25 MHz
  — 8/16/32-bit register-register add/subtract: 80 ns@25 MHz
  — 8 × 8-bit register-register multiply: 560 ns@25 MHz
  — 16 ÷ 8-bit register-register divide: 560 ns@25 MHz
  — 16 × 16-bit register-register multiply: 880 ns@25 MHz

— 32 ÷ 16-bit register-register divide: 880 ns@25 MHz

- Two CPU operating modes
  — Normal mode
  — Advanced mode
- Low-power mode
  Transition to power-down state by SLEEP instruction

2.1.2 Differences from H8/300 CPU

In comparison to the H8/300 CPU, the H8/300H CPU has the following enhancements.

- More general registers
  Eight 16-bit registers have been added.
- Expanded address space
  — Advanced mode supports a maximum 16-Mbyte address space.
  — Normal mode supports the same 64-kbyte address space as the H8/300 CPU.
- Enhanced addressing
  The addressing modes have been enhanced to make effective use of the 16-Mbyte address space.
- Enhanced instructions
  — Data transfer, arithmetic, and logic instructions can operate on 32-bit data.
  — Signed multiply/divide instructions and other instructions have been added.

2.2 CPU Operating Modes

The H8/300H CPU has two operating modes: normal and advanced. Normal mode supports a maximum 64-kbyte address space. Advanced mode supports up to 16 Mbytes.

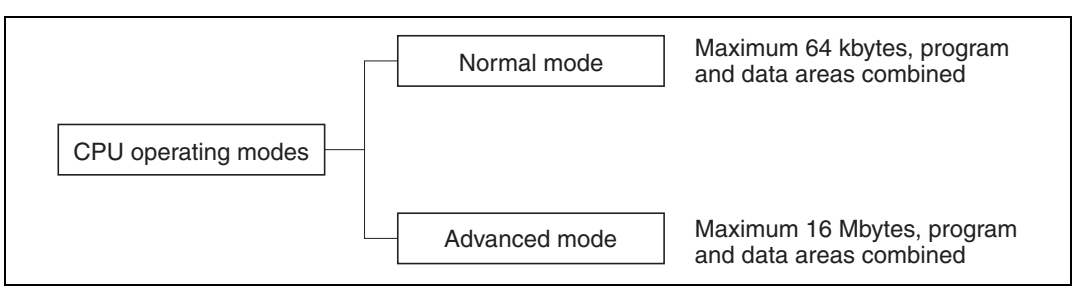

Figure 2.1 CPU Operating Modes

2.3 Address Space

Figure 2.2 shows a simple memory map for the H8/3008. The H8/300H CPU can address a linear address space with a maximum size of 64 kbytes in normal mode, and 16 Mbytes in advanced mode. For further details see section 3.6, Memory Map in Each Operating Mode.

The 1-Mbyte operating modes use 20-bit addressing. The upper 4 bits of effective addresses are ignored.

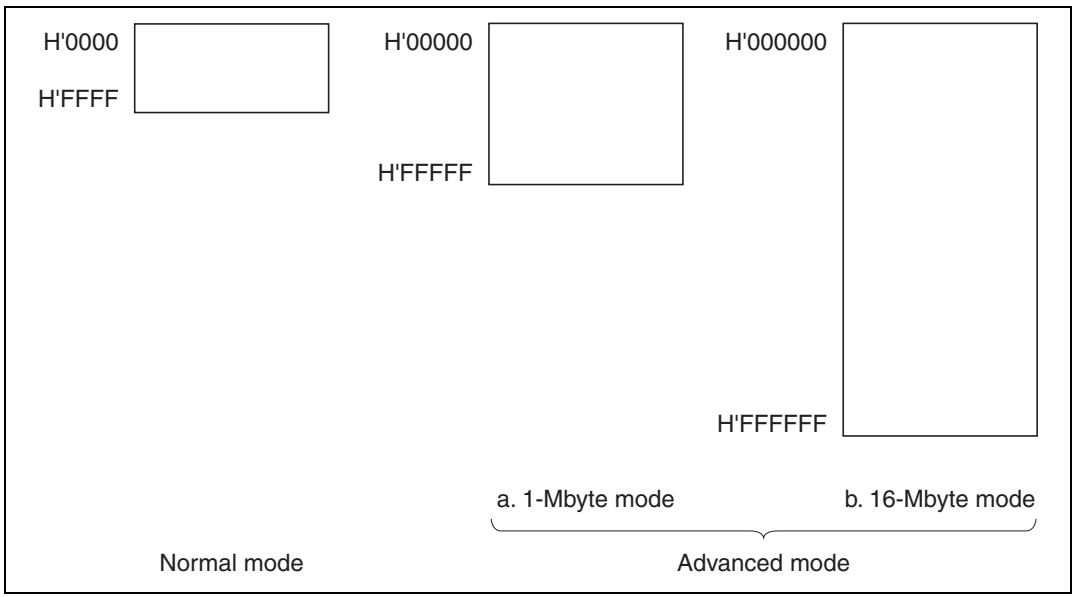

Figure 2.2 Memory Map

2.4 Register Configuration

2.4.1 Overview

The H8/300H CPU has the internal registers shown in figure 2.3. There are two types of registers: general registers and control registers.

General Registers (ERn)

	15 … 0	7 … 0	7 … 0
ER0	E0	R0H	R0L
ER1	E1	R1H	R1L
ER2	E2	R2H	R2L
ER3	E3	R3H	R3L
ER4	E4	R4H	R4L
ER5	E5	R5H	R5L
ER6	E6	R6H	R6L
ER7	E7 (SP)	R7H	R7L

Control Registers (CR)

	23 … 0
PC	

	7	6	5	4	3	2	1	0
CCR	I	UI	H	U	N	Z	V	C

Legend:
SP: Stack pointer
PC: Program counter
CCR: Condition code register
I: Interrupt mask bit
UI: User bit or interrupt mask bit
H: Half-carry flag
U: User bit
N: Negative flag
Z: Zero flag
V: Overflow flag
C: Carry flag

Figure 2.3 CPU Registers

2.4.2 General Registers

The H8/300H CPU has eight 32-bit general registers. These general registers are all functionally alike and can be used without distinction between data registers and address registers. When a general register is used as a data register, it can be accessed as a 32-bit, 16-bit, or 8-bit register. When the general registers are used as 32-bit registers or as address registers, they are designated by the letters ER (ER0 to ER7).

The ER registers divide into 16-bit general registers designated by the letters E (E0 to E7) and R (R0 to R7). These registers are functionally equivalent, providing a maximum sixteen 16-bit registers. The E registers (E0 to E7) are also referred to as extended registers.

The R registers divide into 8-bit general registers designated by the letters RH (R0H to R7H) and RL (R0L to R7L). These registers are functionally equivalent, providing a maximum sixteen 8-bit registers.

Figure 2.4 illustrates the usage of the general registers. The usage of each register can be selected independently.

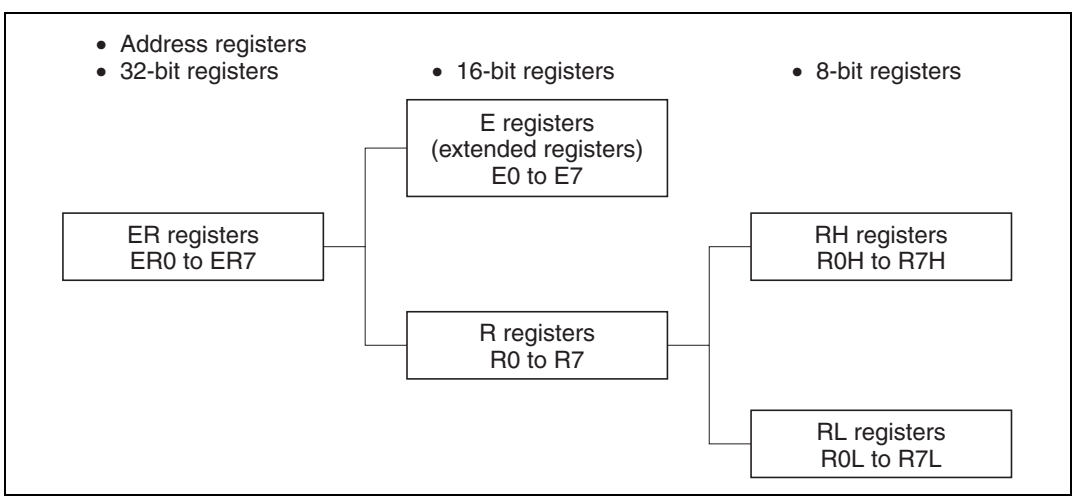

Figure 2.4 Usage of General Registers

General register ER7 has the function of stack pointer (SP) in addition to its general-register function, and is used implicitly in exception handling and subroutine calls. Figure 2.5 shows the stack.

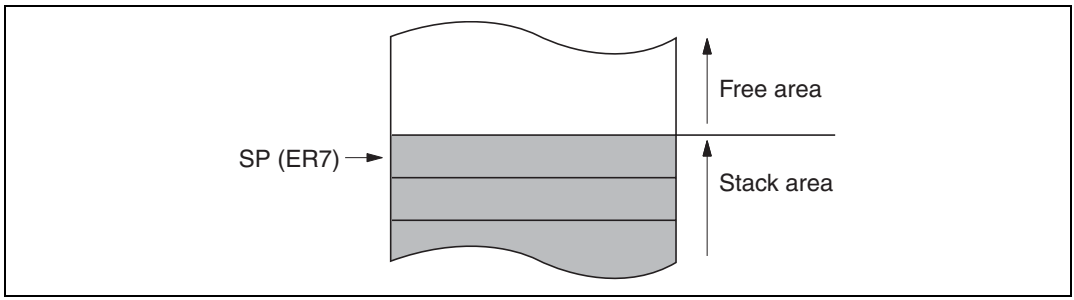

Figure 2.5 Stack

2.4.3 Control Registers

The control registers are the 24-bit program counter (PC) and the 8-bit condition code register (CCR).

Program Counter (PC): This 24-bit counter indicates the address of the next instruction the CPU will execute. The length of all CPU instructions is 2 bytes (one word), so the least significant PC bit is ignored. When an instruction is fetched, the least significant PC bit is regarded as 0.

Condition Code Register (CCR): This 8-bit register contains internal CPU status information, including the interrupt mask bit (I) and half-carry (H), negative (N), zero (Z), overflow (V), and carry (C) flags.

Bit 7—Interrupt Mask Bit (I): Masks interrupts other than NMI when set to 1. NMI is accepted regardless of the I bit setting. The I bit is set to 1 at the start of an exception-handling sequence.

Bit 6—User Bit or Interrupt Mask Bit (UI): Can be written and read by software using the LDC, STC, ANDC, ORC, and XORC instructions. This bit can also be used as an interrupt mask bit. For details see section 5, Interrupt Controller.

Bit 5—Half-Carry Flag (H): When the ADD.B, ADDX.B, SUB.B, SUBX.B, CMP.B, or NEG.B instruction is executed, this flag is set to 1 if there is a carry or borrow at bit 3, and cleared to 0 otherwise. When the ADD.W, SUB.W, CMP.W, or NEG.W instruction is executed, the H flag is set to 1 if there is a carry or borrow at bit 11, and cleared to 0 otherwise. When the ADD.L, SUB.L, CMP.L, or NEG.L instruction is executed, the H flag is set to 1 if there is a carry or borrow at bit 27, and cleared to 0 otherwise.

Bit 4—User Bit (U): Can be written and read by software using the LDC, STC, ANDC, ORC, and XORC instructions.

Bit 3—Negative Flag (N): Stores the value of the most significant bit of data, regarded as the sign bit.

Bit 2—Zero Flag (Z): Set to 1 to indicate zero data, and cleared to 0 to indicate non-zero data.

Bit 1—Overflow Flag (V): Set to 1 when an arithmetic overflow occurs, and cleared to 0 at other times.

Bit 0—Carry Flag (C): Set to 1 when a carry is generated by execution of an operation, and cleared to 0 otherwise. Used by:

- Add instructions, to indicate a carry
- Subtract instructions, to indicate a borrow
- Shift and rotate instructions

The carry flag is also used as a bit accumulator by bit manipulation instructions.

Some instructions leave flag bits unchanged. Operations can be performed on CCR by the LDC, STC, ANDC, ORC, and XORC instructions. The N, Z, V, and C flags are used by conditional branch (Bcc) instructions.

For the action of each instruction on the flag bits, see appendix A.1, Instruction List. For the I and UI bits, see section 5, Interrupt Controller.

2.4.4 Initial CPU Register Values

In reset exception handling, PC is initialized to a value loaded from the vector table, and the I bit in CCR is set to 1. The other CCR bits and the general registers are not initialized. In particular, the initial value of the stack pointer (ER7) is also undefined. The stack pointer (ER7) must therefore be initialized by an MOV.L instruction executed immediately after a reset.

2.5 Data Formats

The H8/300H CPU can process 1-bit, 4-bit (BCD), 8-bit (byte), 16-bit (word), and 32-bit (longword) data. Bit-manipulation instructions operate on 1-bit data by accessing bit n (n = 0, 1, 2, …, 7) of byte operand data. The DAA and DAS decimal-adjust instructions treat byte data as two digits of 4-bit BCD data.

2.5.1 General Register Data Formats

Figures 2.6 and 2.7 show the data formats in general registers.

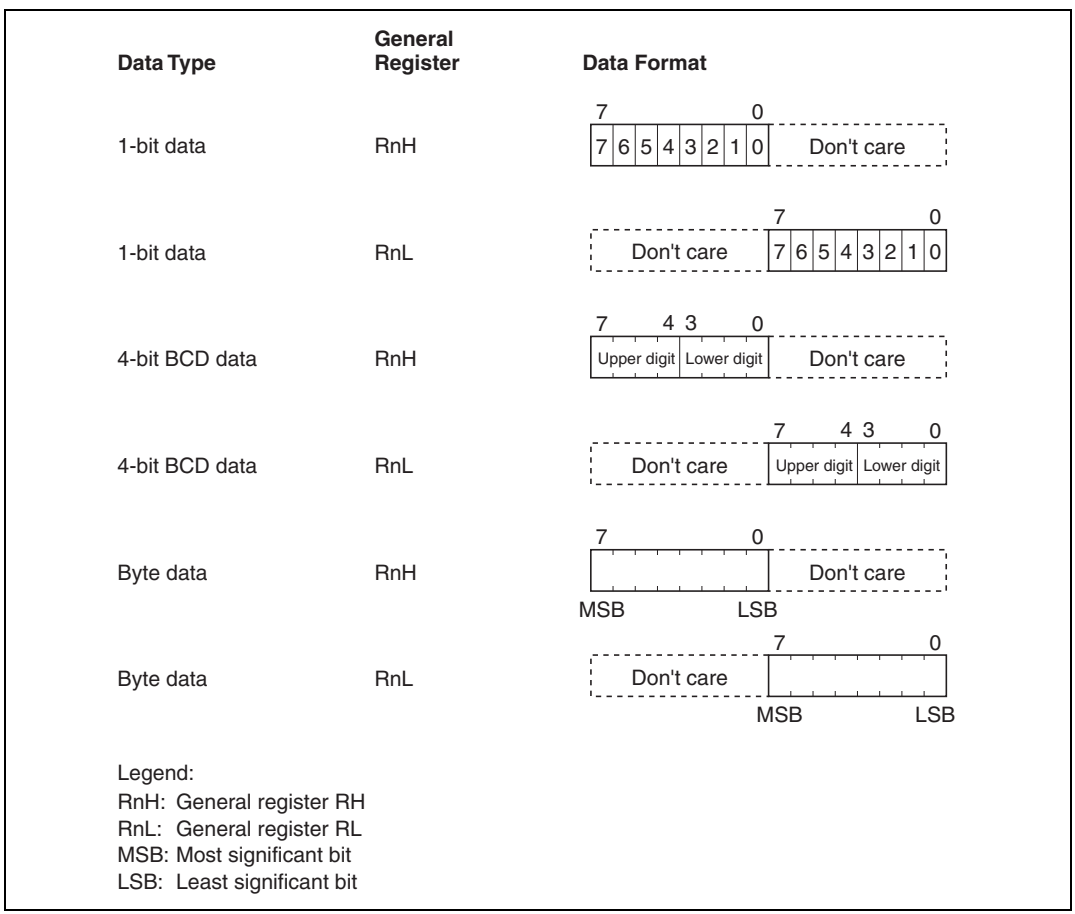

Figure 2.6 General Register Data Formats (1)

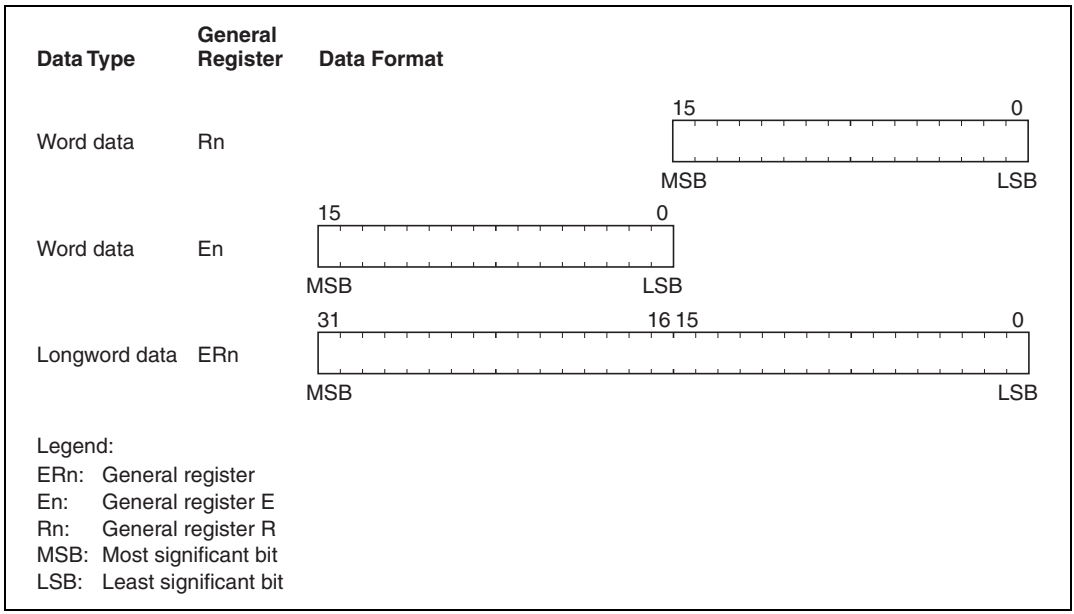

Figure 2.7 General Register Data Formats (2)

2.5.2 Memory Data Formats

Figure 2.8 shows the data formats on memory. The H8/300H CPU can access word data and longword data on memory, but word or longword data must begin at an even address. If an attempt is made to access word or longword data at an odd address, no address error occurs but the least significant bit of the address is regarded as 0, so the access starts at the preceding address. This also applies to instruction fetches.

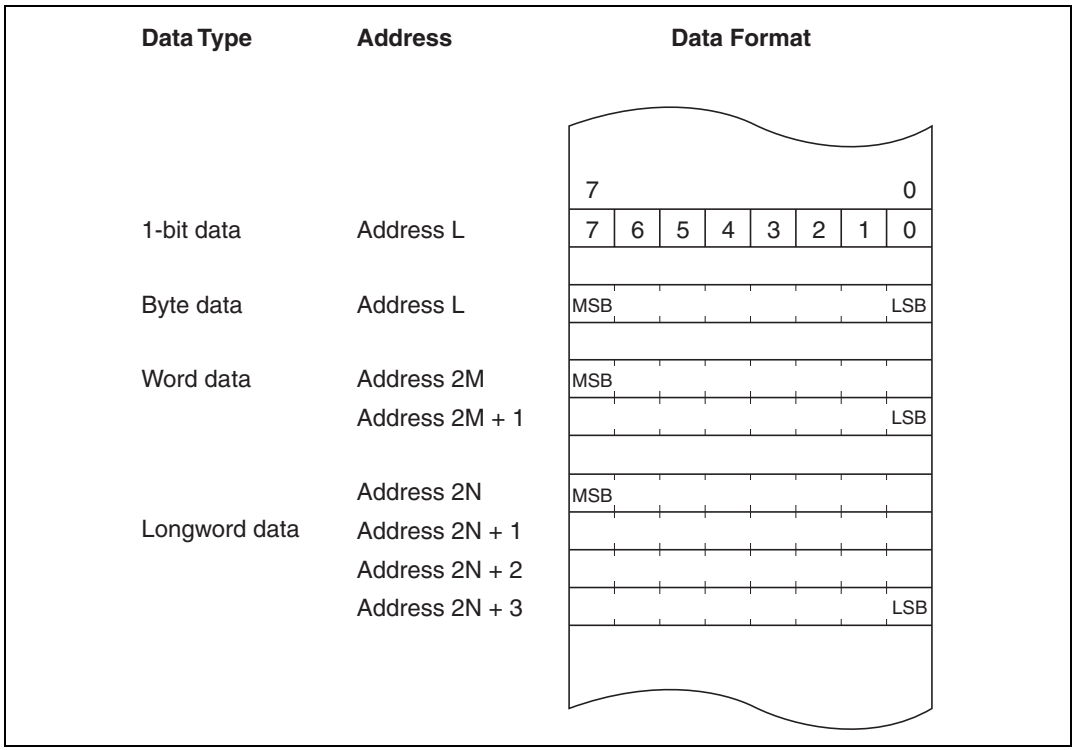

Figure 2.8 Memory Data Formats

When ER7 (SP) is used as an address register to access the stack, the operand size should be word size or longword size.

2.6 Instruction Set

2.6.1 Instruction Set Overview

The H8/300H CPU has 64 types of instructions, which are classified in table 2.1.

Table 2.1 Instruction Classification

Function	Instruction	Types
Data transfer	MOV, PUSH*[1], POP*[1], MOVTPE*[2], MOVFPE*[2]	5
Arithmetic operations	ADD, SUB, ADDX, SUBX, INC, DEC, ADDS, SUBS, DAA, DAS, MULXU, MULXS, DIVXU, DIVXS, CMP, NEG, EXTS, EXTU	18
Logic operations	AND, OR, XOR, NOT	4
Shift operations	SHAL, SHAR, SHLL, SHLR, ROTL, ROTR, ROTXL, ROTXR	8
Bit manipulation	BSET, BCLR, BNOT, BTST, BAND, BIAND, BOR, BIOR, BXOR, BIXOR, BLD, BILD, BST, BIST	14
Branch	Bcc*[3], JMP, BSR, JSR, RTS	5
System control	TRAPA, RTE, SLEEP, LDC, STC, ANDC, ORC, XORC, NOP	9
Block data transfer	EEPMOV	1
		Total 64 types

Notes: 1. POP.W Rn is identical to MOV.W @SP+, Rn.
PUSH.W Rn is identical to MOV.W Rn, @–SP.
POP.L ERn is identical to MOV.L @SP+, Rn.
PUSH.L ERn is identical to MOV.L Rn, @–SP.
2. Not available in the H8/3008.
3. Bcc is a generic branching instruction.

2.6.2 Instructions and Addressing Modes

Table 2.2 indicates the instructions available in the H8/300H CPU.

Table 2.2 Instructions and Addressing Modes

		Addressing Modes												
Function	**Instruction**	**#xx**	**Rn**	**@ERn**	**@ (d:16, ERn)**	**@ (d:24, ERn)**	**@ERn+/ @–ERn**	**@ aa:8**	**@ aa:16**	**@ aa:24**	**@ (d:8, PC)**	**@ (d:16, PC)**	**@@ aa:8**	**—**
Data transfer	MOV	BWL	BWL	BWL	BWL	BWL	BWL	B	BWL	BWL	—	—	—	—
	POP, PUSH	—	—	—	—	—	—	—	—	—	—	—	—	WL
	MOVFPE, MOVTPE	—	—	—	—	—	—	—	—	—	—	—	—	—
Arithmetic operations	ADD, CMP	BWL	BWL	—	—	—	—	—	—	—	—	—	—	—
	SUB	WL	BWL	—	—	—	—	—	—	—	—	—	—	—
	ADDX, SUBX	B	B	—	—	—	—	—	—	—	—	—	—	—
	ADDS, SUBS	—	L	—	—	—	—	—	—	—	—	—	—	—
	INC, DEC	—	BWL	—	—	—	—	—	—	—	—	—	—	—
	DAA, DAS	—	B	—	—	—	—	—	—	—	—	—	—	—
	MULXU, MULXS, DIVXU, DIVXS	—	BW	—	—	—	—	—	—	—	—	—	—	—
	NEG	—	BWL	—	—	—	—	—	—	—	—	—	—	—
	EXTU, EXTS	—	WL	—	—	—	—	—	—	—	—	—	—	—
Logic operations	AND, OR, XOR	—	BWL	—	—	—	—	—	—	—	—	—	—	—
	NOT	—	BWL	—	—	—	—	—	—	—	—	—	—	—
Shift instructions		—	BWL	—	—	—	—	—	—	—	—	—	—	—
Bit manipulation		—	B	B	—	—	—	B	—	—	—	—	—	—
Branch	Bcc, BSR	—	—	—	—	—	—	—	—	—	—	—	—	—
	JMP, JSR	—	—	○	—	—	—	—	—	—	○	○	—	—
	RTS	—	—	—	—	—	—	—	—	○	—	—	○	—
System control	TRAPA	—	—	—	—	—	—	—	—	—	—	—	—	○
	RTE	—	—	—	—	—	—	—	—	—	—	—	—	○
	SLEEP	—	—	—	—	—	—	—	—	—	—	—	—	○
	LDC	B	B	W	W	W	W	—	W	W	—	—	—	○
	STC	—	B	W	W	W	W	—	W	W	—	—	—	—
	ANDC, ORC, XORC	B	—	—	—	—	—	—	—	—	—	—	—	—
	NOP	—	—	—	—	—	—	—	—	—	—	—	—	○
Block data transfer		—	—	—	—	—	—	—	—	—	—	—	—	BW

2.6.3 Tables of Instructions Classified by Function

Tables 2.3 to 2.10 summarize the instructions in each functional category. The operation notation used in these tables is defined next.

Operation Notation

Rd	General register (destination)*
Rs	General register (source)*
Rn	General register*
ERn	General register (32-bit register or address register)*
(EAd)	Destination operand
(EAs)	Source operand
CCR	Condition code register
N	N (negative) flag of CCR
Z	Z (zero) flag of CCR
V	V (overflow) flag of CCR
C	C (carry) flag of CCR
PC	Program counter
SP	Stack pointer
#IMM	Immediate data
disp	Displacement
+	Addition
–	Subtraction
×	Multiplication
÷	Division
∧	AND logical
∨	OR logical
⊕	Exclusive OR logical
→	Move
¬	NOT (logical complement)
:3/:8/:16/:24	3-, 8-, 16-, or 24-bit length

Note: * General registers include 8-bit registers (R0H to R7H, R0L to R7L), 16-bit registers (R0 to R7, E0 to E7), and 32-bit data or address registers (ER0 to ER7).

Table 2.3 Data Transfer Instructions

Instruction	Size*	Function
MOV	B/W/L	(EAs) → Rd, Rs → (EAd) Moves data between two general registers or between a general register and memory, or moves immediate data to a general register.
MOVFPE	B	(EAs) → Rd Cannot be used in the H8/3008.
MOVTPE	B	Rs → (EAs) Cannot be used in the H8/3008.
POP	W/L	@SP+ → Rn Pops a general register from the stack. POP.W Rn is identical to MOV.W @SP+, Rn. Similarly, POP.L ERn is identical to MOV.L @SP+, ERn.
PUSH	W/L	Rn → @−SP Pushes a general register onto the stack. PUSH.W Rn is identical to MOV.W Rn, @−SP. Similarly, PUSH.L ERn is identical to MOV.L ERn, @−SP.

Note: * Size refers to the operand size.
B: Byte
W: Word
L: Longword

Table 2.4 Arithmetic Operation Instructions

Instruction	Size*	Function
ADD,SUB	B/W/L	Rd ± Rs → Rd, Rd ± #IMM → Rd Performs addition or subtraction on data in two general registers, or on immediate data and data in a general register. (Immediate byte data cannot be subtracted from data in a general register. Use the SUBX or ADD instruction.)
ADDX, SUBX	B	Rd ± Rs ± C → Rd, Rd ± #IMM ± C → Rd Performs addition or subtraction with carry or borrow on data in two general registers, or on immediate data and data in a general register.
INC, DEC	B/W/L	Rd ± 1 → Rd, Rd ± 2 → Rd Increments or decrements a general register by 1 or 2. (Byte operands can be incremented or decremented by 1 only.)
ADDS, SUBS	L	Rd ± 1 → Rd, Rd ± 2 → Rd, Rd ± 4 → Rd Adds or subtracts the value 1, 2, or 4 to or from data in a 32-bit register.
DAA, DAS	B	Rd decimal adjust → Rd Decimal-adjusts an addition or subtraction result in a general register by referring to CCR to produce 4-bit BCD data.
MULXU	B/W	Rd × Rs → Rd Performs unsigned multiplication on data in two general registers: either 8 bits × 8 bits → 16 bits or 16 bits × 16 bits → 32 bits.
MULXS	B/W	Rd × Rs → Rd Performs signed multiplication on data in two general registers: either 8 bits × 8 bits → 16 bits or 16 bits × 16 bits → 32 bits.

Instruction	Size*	Function
DIVXU	B/W	Rd ÷ Rs → Rd Performs unsigned division on data in two general registers: either 16 bits ÷ 8 bits → 8-bit quotient and 8-bit remainder or 32 bits ÷ 16 bits → 16-bit quotient and 16-bit remainder
DIVXS	B/W	Rd ÷ Rs → Rd Performs signed division on data in two general registers: either 16 bits ÷ 8 bits → 8-bit quotient and 8-bit remainder, or 32 bits ÷ 16 bits → 16-bit quotient and 16-bit remainder
CMP	B/W/L	Rd – Rs, Rd – #IMM Compares data in a general register with data in another general register or with immediate data, and sets CCR according to the result.
NEG	B/W/L	0 – Rd → Rd Takes the two's complement (arithmetic complement) of data in a general register.
EXTS	W/L	Rd (sign extension) → Rd Extends byte data in the lower 8 bits of a 16-bit register to word data, or extends word data in the lower 16 bits of a 32-bit register to longword data, by extending the sign bit.
EXTU	W/L	Rd (zero extension) → Rd Extends byte data in the lower 8 bits of a 16-bit register to word data, or extends word data in the lower 16 bits of a 32-bit register to longword data, by padding with zeros.

Note: * Size refers to the operand size.
B: Byte
W: Word
L: Longword

Table 2.5 Logic Operation Instructions

Instruction	Size*	Function
AND	B/W/L	Rd ∧ Rs → Rd, Rd ∧ #IMM → Rd Performs a logical AND operation on a general register and another general register or immediate data.
OR	B/W/L	Rd ∨ Rs → Rd, Rd ∨ #IMM → Rd Performs a logical OR operation on a general register and another general register or immediate data.
XOR	B/W/L	Rd ⊕ Rs → Rd, Rd ⊕ #IMM → Rd Performs a logical exclusive OR operation on a general register and another general register or immediate data.
NOT	B/W/L	¬ Rd → Rd Takes the one's complement (logical complement) of general register contents.

Note: * Size refers to the operand size.
B: Byte
W: Word
L: Longword

Table 2.6 Shift Instructions

Instruction	Size*	Function
SHAL, SHAR	B/W/L	Rd (shift) → Rd Performs an arithmetic shift on general register contents.
SHLL, SHLR	B/W/L	Rd (shift) → Rd Performs a logical shift on general register contents.
ROTL, ROTR	B/W/L	Rd (rotate) → Rd Rotates general register contents.
ROTXL, ROTXR	B/W/L	Rd (rotate) → Rd Rotates general register contents, including the carry bit.

Note: * Size refers to the operand size.
B: Byte
W: Word
L: Longword

Table 2.7 Bit Manipulation Instructions

Instruction	Size*	Function
BSET	B	1 → (<bit-No.> of <EAd>) Sets a specified bit in a general register or memory operand to 1. The bit number is specified by 3-bit immediate data or the lower 3 bits of a general register.
BCLR	B	0 → (<bit-No.> of <EAd>) Clears a specified bit in a general register or memory operand to 0. The bit number is specified by 3-bit immediate data or the lower 3 bits of a general register.
BNOT	B	¬ (<bit-No.> of <EAd>) → (<bit-No.> of <EAd>) Inverts a specified bit in a general register or memory operand. The bit number is specified by 3-bit immediate data or the lower 3 bits of a general register.
BTST	B	¬ (<bit-No.> of <EAd>) → Z Tests a specified bit in a general register or memory operand and sets or clears the Z flag accordingly. The bit number is specified by 3-bit immediate data or the lower 3 bits of a general register.
BAND	B	C ∧ (<bit-No.> of <EAd>) → C ANDs the carry flag with a specified bit in a general register or memory operand and stores the result in the carry flag. The bit number is specified by 3-bit immediate data.
BIAND	B	C ∧ [¬ (<bit-No.> of <EAd>)] → C ANDs the carry flag with the inverse of a specified bit in a general register or memory operand and stores the result in the carry flag. The bit number is specified by 3-bit immediate data.

Instruction	Size*	Function
BOR	B	C ∨ (<bit-No.> of <EAd>) → C ORs the carry flag with a specified bit in a general register or memory operand and stores the result in the carry flag. The bit number is specified by 3-bit immediate data.
BIOR	B	C ∨ [¬ (<bit-No.> of <EAd>)] → C ORs the carry flag with the inverse of a specified bit in a general register or memory operand and stores the result in the carry flag. The bit number is specified by 3-bit immediate data.
BXOR	B	C ⊕ (<bit-No.> of <EAd>) → C Exclusive-ORs the carry flag with a specified bit in a general register or memory operand and stores the result in the carry flag. The bit number is specified by 3-bit immediate data.
BIXOR	B	C ⊕ [¬ (<bit-No.> of <EAd>)] → C Exclusive-ORs the carry flag with the inverse of a specified bit in a general register or memory operand and stores the result in the carry flag. The bit number is specified by 3-bit immediate data.
BLD	B	(<bit-No.> of <EAd>) → C Transfers a specified bit in a general register or memory operand to the carry flag. The bit number is specified by 3-bit immediate data.
BILD	B	¬ (<bit-No.> of <EAd>) → C Transfers the inverse of a specified bit in a general register or memory operand to the carry flag. The bit number is specified by 3-bit immediate data.
BST	B	C → (<bit-No.> of <EAd>) Transfers the carry flag value to a specified bit in a general register or memory operand. The bit number is specified by 3-bit immediate data.
BIST	B	C → ¬ (<bit-No.> of <EAd>) Transfers the inverse of the carry flag value to a specified bit in a general register or memory operand. The bit number is specified by 3-bit immediate data.

Note: * Size refers to the operand size.
B: Byte

Table 2.8 Branching Instructions

Instruction	Size	Function
Bcc	—	Branches to a specified address if address specified condition is met. The branching conditions are listed below.

Mnemonic	Description	Condition
BRA (BT)	Always (true)	Always
BRN (BF)	Never (false)	Never
BHI	High	$C \vee Z = 0$
BLS	Low or same	$C \vee Z = 1$
Bcc (BHS)	Carry clear (high or same)	$C = 0$
BCS (BLO)	Carry set (low)	$C = 1$
BNE	Not equal	$Z = 0$
BEQ	Equal	$Z = 1$
BVC	Overflow clear	$V = 0$
BVS	Overflow set	$V = 1$
BPL	Plus	$N = 0$
BMI	Minus	$N = 1$
BGE	Greater or equal	$N \oplus V = 0$
BLT	Less than	$N \oplus V = 1$
BGT	Greater than	$Z \vee (N \oplus V) = 0$
BLE	Less or equal	$Z \vee (N \oplus V) = 1$

JMP	—	Branches unconditionally to a specified address
BSR	—	Branches to a subroutine at a specified address
JSR	—	Branches to a subroutine at a specified address
RTS	—	Returns from a subroutine

Table 2.9 System Control Instructions

Instruction	Size*	Function
TRAPA	—	Starts trap-instruction exception handling
RTE	—	Returns from an exception-handling routine
SLEEP	—	Causes a transition to the power-down state
LDC	B/W	(EAs) → CCR Moves the source operand contents to the condition code register. The condition code register size is one byte, but in transfer from memory, data is read by word access.
STC	B/W	CCR → (EAd) Transfers the CCR contents to a destination location. The condition code register size is one byte, but in transfer to memory, data is written by word access.
ANDC	B	CCR ∧ #IMM → CCR Logically ANDs the condition code register with immediate data.
ORC	B	CCR ∨ #IMM → CCR Logically ORs the condition code register with immediate data.
XORC	B	CCR ⊕ #IMM → CCR Logically exclusive-ORs the condition code register with immediate data.
NOP	—	PC + 2 → PC Only increments the program counter.

Note: * Size refers to the operand size.
B: Byte
W: Word

Table 2.10 Block Transfer Instruction

Instruction	Size	Function
EEPMOV.B	—	if R4L ≠ 0 then repeat @ER5+ → @ER6+, R4L – 1 → R4L until R4L = 0 else next;
EEPMOV.W	—	if R4 ≠ 0 then repeat @ER5+ → @ER6+, R4 – 1 → R4 until R4 = 0 else next; Block transfer instruction. This instruction transfers the number of data bytes specified by R4L or R4, starting from the address indicated by ER5, to the location starting at the address indicated by ER6. At the end of the transfer, the next instruction is executed.

2.6.4 Basic Instruction Formats

The H8/300H instructions consist of 2-byte (word) units. An instruction consists of an operation field (OP field), a register field (r field), an effective address extension (EA field), and a condition field (cc).

Operation Field: Indicates the function of the instruction, the addressing mode, and the operation to be carried out on the operand. The operation field always includes the first 4 bits of the instruction. Some instructions have two operation fields.

Register Field: Specifies a general register. Address registers are specified by 3 bits, data registers by 3 bits or 4 bits. Some instructions have two register fields. Some have no register field.

Effective Address Extension: Eight, 16, or 32 bits specifying immediate data, an absolute address, or a displacement. A 24-bit address or displacement is treated as 32-bit data in which the first 8 bits are 0 (H'00).

Condition Field: Specifies the branching condition of Bcc instructions.

Figure 2.9 shows examples of instruction formats.

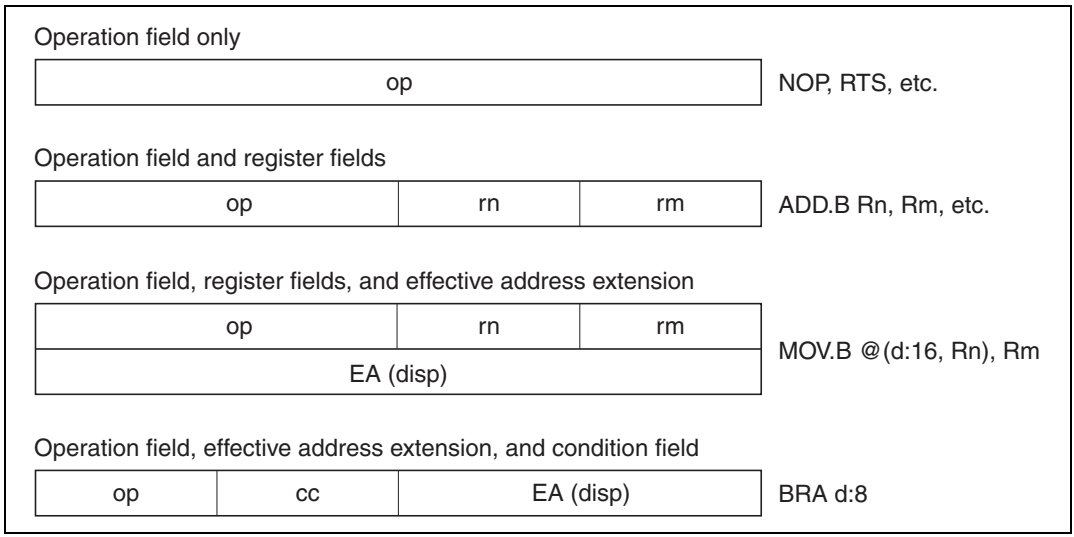

Figure 2.9 Instruction Formats

2.6.5 Notes on Use of Bit Manipulation Instructions

The BSET, BCLR, BNOT, BST, and BIST instructions read a byte of data, modify a bit in the byte, then write the byte back. Care is required when these instructions are used to access registers with write-only bits, or to access ports.

Step		Description
1	Read	Read one data byte at the specified address
2	Modify	Modify one bit in the data byte
3	Write	Write the modified data byte back to the specified address

Example 1: BCLR is executed to clear bit 0 in the port 4 data direction register (P4DDR) under the following conditions.

$P4_7$, $P4_6$: Input pins
$P4_5$ – $P4_0$: Output pins

The intended purpose of this BCLR instruction is to switch $P4_0$ from output to input.

Before Execution of BCLR Instruction

	$P4_7$	$P4_6$	$P4_5$	$P4_4$	$P4_3$	$P4_2$	$P4_1$	$P4_0$
Input/output	Input	Input	Output	Output	Output	Output	Output	Output
DDR	0	0	1	1	1	1	1	1

Execution of BCLR Instruction

BCLR #0, @P4DDR ; Execute BCLR instruction on DDR

After Execution of BCLR Instruction

	$P4_7$	$P4_6$	$P4_5$	$P4_4$	$P4_3$	$P4_2$	$P4_1$	$P4_0$
Input/output	Output	Output	Output	Output	Output	Output	Output	Input
DDR	1	1	1	1	1	1	1	0

Explanation: To execute the BCLR instruction, the CPU begins by reading P4DDR. Since P4DDR is a write-only register, it is read as H'FF, even though its true value is H'3F.

Next the CPU clears bit 0 of the read data, changing the value to H'FE.

Finally, the CPU writes this value (H'FE) back to P4DDR to complete the BCLR instruction.

As a result, $P4_0$DDR is cleared to 0, making $P4_0$ an input pin. In addition, $P4_7$DDR and $P4_6$DDR are set to 1, making $P4_7$ and $P4_6$ output pins.

The BCLR instruction can be used to clear flags in the on-chip registers to 0. In the case of the IRQ status register (ISR), for example, a flag must be read as a condition for clearing it, but when using the BCLR instruction, if it is known that a flag has been set to 1 in an interrupt-handling routine, for instance, it is not necessary to read the flag ahead of time.

2.7 Addressing Modes and Effective Address Calculation

2.7.1 Addressing Modes

The H8/300H CPU supports the eight addressing modes listed in table 2.11. Each instruction uses a subset of these addressing modes. Arithmetic and logic instructions can use the register direct and immediate modes. Data transfer instructions can use all addressing modes except program-counter relative and memory indirect. Bit manipulation instructions use register direct, register indirect, or absolute (@aa:8) addressing mode to specify an operand, and register direct (BSET, BCLR, BNOT, and BTST instructions) or immediate (3-bit) addressing mode to specify a bit number in the operand.

Table 2.11 Addressing Modes

No.	Addressing Mode	Symbol
1	Register direct	Rn
2	Register indirect	@ERn
3	Register indirect with displacement	@(d:16, ERn)/@(d:24, ERn)
4	Register indirect with post-increment Register indirect with pre-decrement	@ERn+ @–ERn
5	Absolute address	@aa:8/@aa:16/@aa:24
6	Immediate	#xx:8/#xx:16/#xx:32
7	Program-counter relative	@(d:8, PC)/@(d:16, PC)
8	Memory indirect	@@aa:8

Register Direct—Rn: The register field of the instruction code specifies an 8-, 16-, or 32-bit register containing the operand. R0H to R7H and R0L to R7L can be specified as 8-bit registers. R0 to R7 and E0 to E7 can be specified as 16-bit registers. ER0 to ER7 can be specified as 32-bit registers.

Register Indirect—@ERn: The register field of the instruction code specifies an address register (ERn), the lower 24 bits of which contain the address of the operand.

Register Indirect with Displacement—@(d:16, ERn) or @(d:24, ERn): A 16-bit or 24-bit displacement contained in the instruction code is added to the contents of an address register (ERn) specified by the register field of the instruction, and the lower 24 bits of the sum specify the address of a memory operand. A 16-bit displacement is sign-extended when added.

Register Indirect with Post-Increment or Pre-Decrement—@ERn+ or @–ERn:

- Register indirect with post-increment—@ERn+

  The register field of the instruction code specifies an address register (ERn) the lower 24 bits of which contain the address of a memory operand. After the operand is accessed, 1, 2, or 4 is added to the address register contents (32 bits) and the sum is stored in the address register. The value added is 1 for byte access, 2 for word access, or 4 for longword access. For word or longword access, the register value should be even.
- Register indirect with pre-decrement—@–ERn

  The value 1, 2, or 4 is subtracted from an address register (ERn) specified by the register field in the instruction code, and the lower 24 bits of the result become the address of a memory operand. The result is also stored in the address register. The value subtracted is 1 for byte access, 2 for word access, or 4 for longword access. For word or longword access, the resulting register value should be even.

Absolute Address—@aa:8, @aa:16, or @aa:24: The instruction code contains the absolute address of a memory operand. The absolute address may be 8 bits long (@aa:8), 16 bits long (@aa:16), or 24 bits long (@aa:24). For an 8-bit absolute address, the upper 16 bits are all assumed to be 1 (H'FFFF). For a 16-bit absolute address the upper 8 bits are a sign extension. A 24-bit absolute address can access the entire address space. Table 2.12 indicates the accessible address ranges.

Table 2.12 Absolute Address Access Ranges

Absolute Address	1-Mbyte Modes	16-Mbyte Modes
8 bits (@aa:8)	H'FFF00 to H'FFFFF (1048320 to 1048575)	H'FFFF00 to H'FFFFFF (16776960 to 16777215)
16 bits (@aa:16)	H'00000 to H'07FFF, H'F8000 to H'FFFFF (0 to 32767, 1015808 to 1048575)	H'000000 to H'007FFF, H'FF8000 to H'FFFFFF (0 to 32767, 16744448 to 16777215)
24 bits (@aa:24)	H'00000 to H'FFFFF (0 to 1048575)	H'000000 to H'FFFFFF (0 to 16777215)

Immediate—#xx:8, #xx:16, or #xx:32: The instruction code contains 8-bit (#xx:8), 16-bit (#xx:16), or 32-bit (#xx:32) immediate data as an operand.

The instruction codes of the ADDS, SUBS, INC, and DEC instructions contain immediate data implicitly. The instruction codes of some bit manipulation instructions contain 3-bit immediate data specifying a bit number. The TRAPA instruction code contains 2-bit immediate data specifying a vector address.

Program-Counter Relative—@(d:8, PC) or @(d:16, PC): This mode is used in the Bcc and BSR instructions. An 8-bit or 16-bit displacement contained in the instruction code is sign-extended to 24 bits and added to the 24-bit PC contents to generate a 24-bit branch address. The PC value to which the displacement is added is the address of the first byte of the next instruction, so the possible branching range is –126 to +128 bytes (–63 to +64 words) or –32766 to +32768 bytes (–16383 to +16384 words) from the branch instruction. The resulting value should be an even number.

Memory Indirect—@@aa:8: This mode can be used by the JMP and JSR instructions. The instruction code contains an 8-bit absolute address specifying a memory operand. This memory operand contains a branch address. The memory operand is accessed by longword access. The first byte of the memory operand is ignored, generating a 24-bit branch address. See figure 2.10. The upper bits of the 8-bit absolute address are assumed to be 0 (H'0000), so the address range is 0 to 255 (H'000000 to H'0000FF). Note that the first part of this range is also the exception vector area. For further details see section 5, Interrupt Controller.

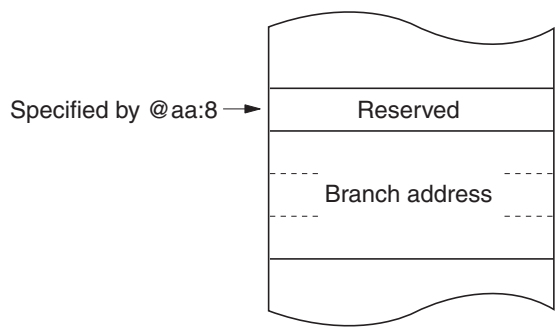

Figure 2.10 Memory-Indirect Branch Address Specification

When a word-size or longword-size memory operand is specified, or when a branch address is specified, if the specified memory address is odd, the least significant bit is regarded as 0. The accessed data or instruction code therefore begins at the preceding address. See section 2.5.2, Memory Data Formats.

2.7.2 Effective Address Calculation

Table 2.13 explains how an effective address is calculated in each addressing mode. In the 1-Mbyte operating modes the upper 4 bits of the calculated address are ignored in order to generate a 20-bit effective address.

Table 2.13 Effective Address Calculation

No.	Addressing Mode and Instruction Format	Effective Address Calculation	Effective Address
1	Register direct (Rn)		Operand is general register contents
2	Register indirect (@ERn)		
3	Register indirect with displacement @(d:16, ERn)/@(d:24, ERn)		
4	Register indirect with post-increment or pre-decrement Register indirect with post-increment @ERn+ Register indirect with pre-decrement @–ERn		

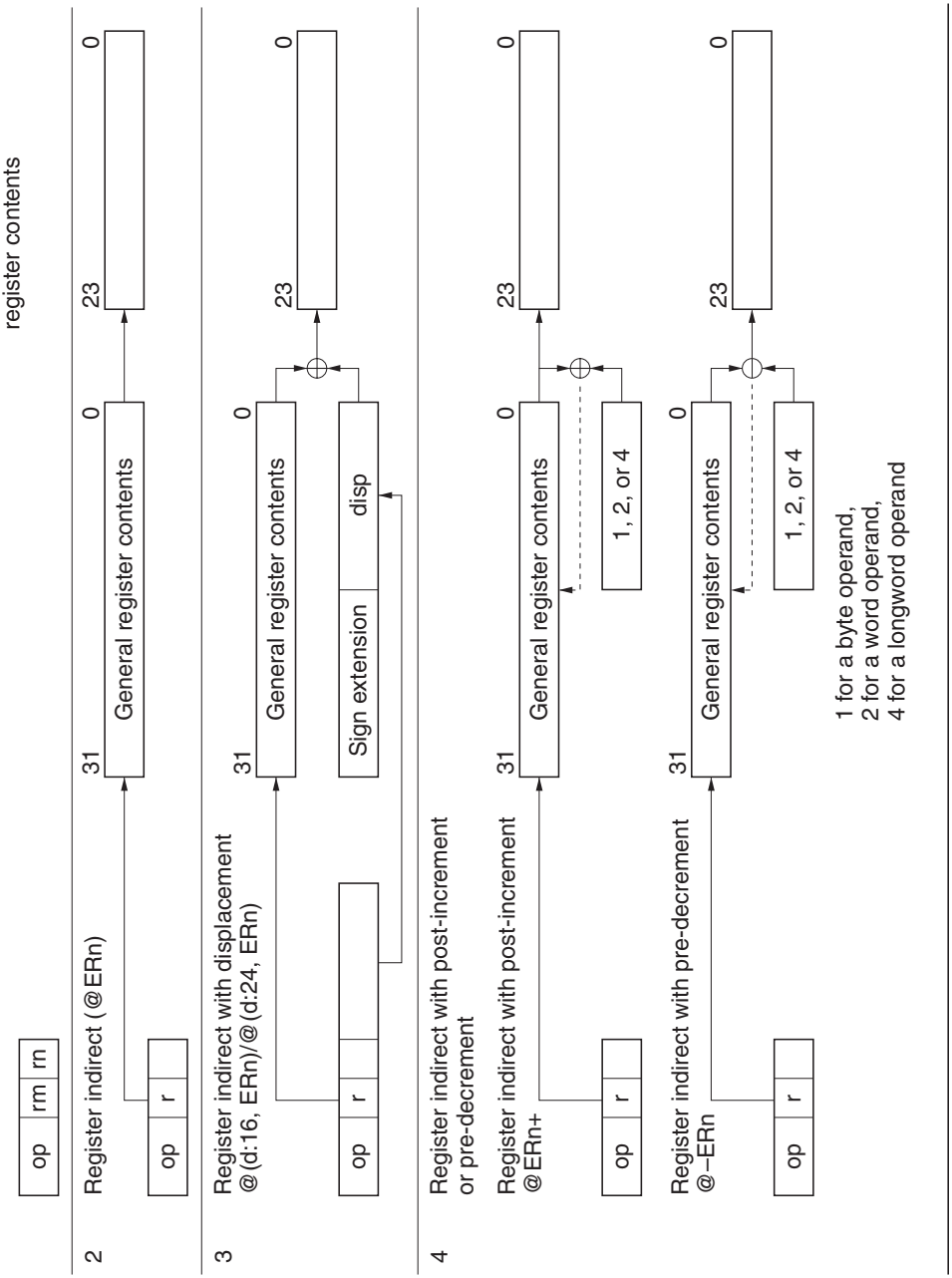

No.	Addressing Mode and Instruction Format	Effective Address Calculation	Effective Address
5	Absolute address @aa:8 op | abs		23 … 8 7 … 0 H'FFFF |
	@aa:16 op | abs		23 16 15 … 0 Sign extension |
	@aa:24 op abs		23 … 0
6	Immediate #xx:8, #xx:16, or #xx:32 op | IMM		Operand is immediate data
7	Program-counter relative @(d:8, PC) or @(d:16, PC) op | disp	23 … 0 PC contents Sign extension | disp	23 … 0

No.	Addressing Mode and Instruction Format	Effective Address Calculation	Effective Address
8	Memory indirect @@aa:8		

Normal mode

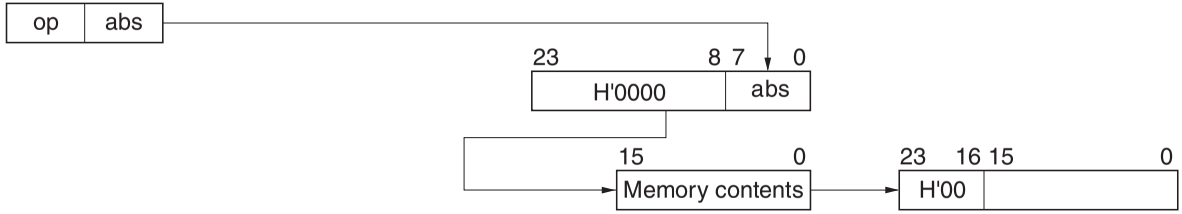

Advanced mode

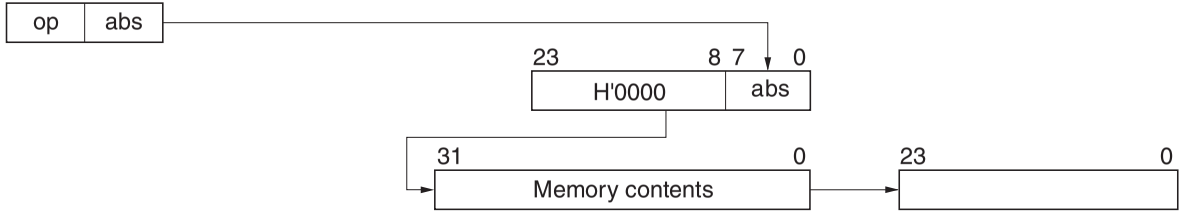

Legend:

r, rm, rn: Register field
op: Operation field
disp: Displacement
IMM: Immediate data
abs: Absolute address

2.8 Processing States

2.8.1 Overview

The H8/300H CPU has five processing states: the program execution state, exception-handling state, power-down state, reset state, and bus-released state. The power-down state includes sleep mode, software standby mode, and hardware standby mode. Figure 2.11 classifies the processing states. Figure 2.13 indicates the state transitions.

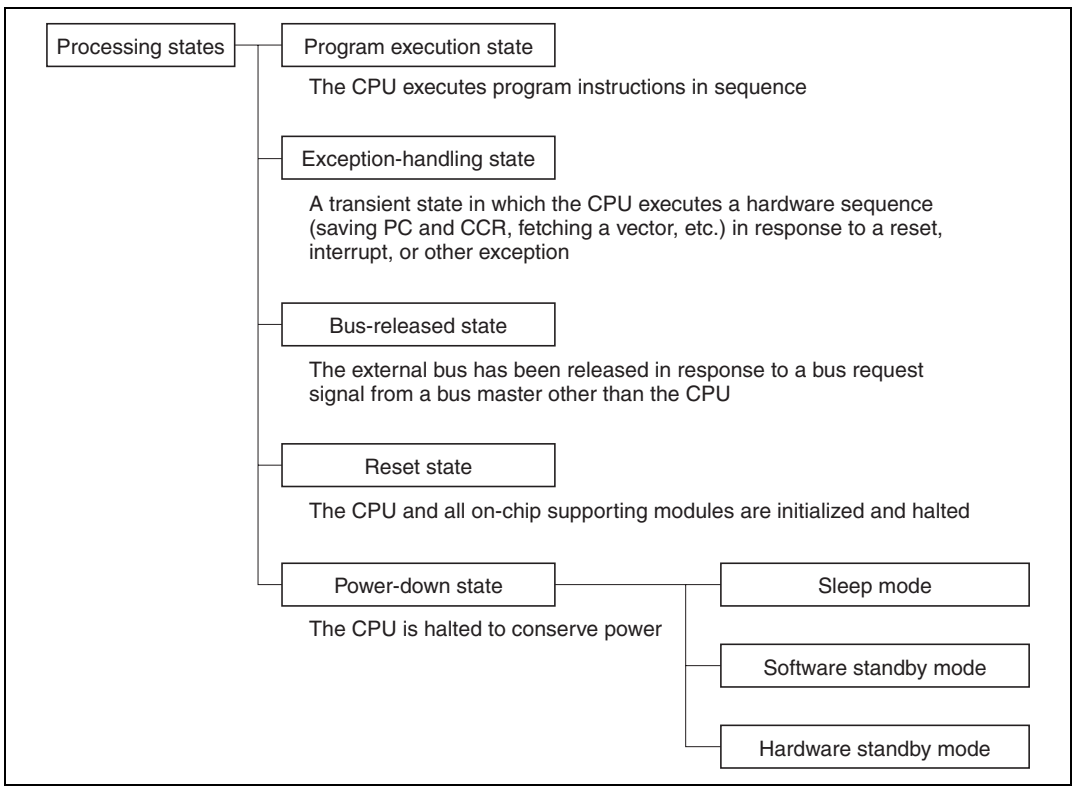

Figure 2.11 Processing States

2.8.2 Program Execution State

In this state the CPU executes program instructions in normal sequence.

2.8.3 Exception-Handling State

The exception-handling state is a transient state that occurs when the CPU alters the normal program flow due to a reset, interrupt, or trap instruction. The CPU fetches a starting address from the exception vector table and branches to that address. In interrupt and trap exception handling the CPU references the stack pointer (ER7) and saves the program counter and condition code register.

Types of Exception Handling and Their Priority: Exception handling is performed for resets, interrupts, and trap instructions. Table 2.14 indicates the types of exception handling and their priority. Trap instruction exceptions are accepted at all times in the program execution state.

Table 2.14 Exception Handling Types and Priority

Priority	Type of Exception	Detection Timing	Start of Exception Handling
High ↑	Reset	Synchronized with clock	Exception handling starts immediately when $\overline{RES}$ changes from low to high
	Interrupt	End of instruction execution or end of exception handling*	When an interrupt is requested, exception handling starts at the end of the current instruction or current exception-handling sequence
Low	Trap instruction	When TRAPA instruction is executed	Exception handling starts when a trap (TRAPA) instruction is executed

Note: * Interrupts are not detected at the end of the ANDC, ORC, XORC, and LDC instructions, or immediately after reset exception handling.

Figure 2.12 classifies the exception sources. For further details about exception sources, vector numbers, and vector addresses, see section 4, Exception Handling, and section 5, Interrupt Controller.

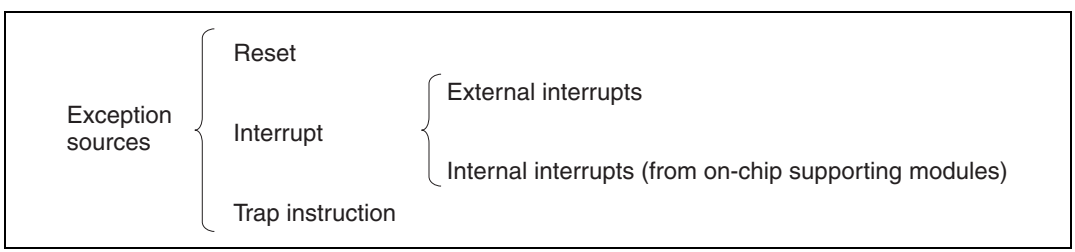

Figure 2.12 Classification of Exception Sources

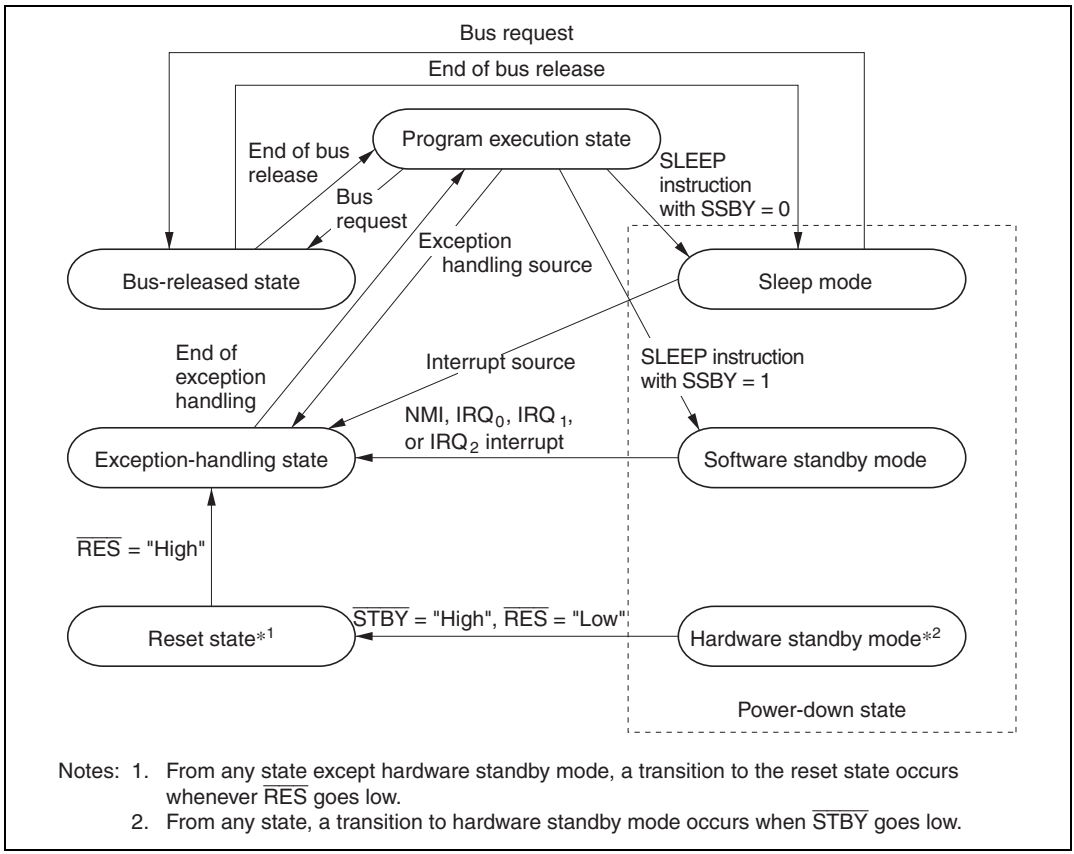

Notes: 1. From any state except hardware standby mode, a transition to the reset state occurs whenever $\overline{RES}$ goes low.
2. From any state, a transition to hardware standby mode occurs when $\overline{STBY}$ goes low.

Figure 2.13 State Transitions

2.8.4 Exception Handling Operation

Reset Exception Handling: Reset exception handling has the highest priority. The reset state is entered when the $\overline{RES}$ signal goes low. Reset exception handling starts after that, when $\overline{RES}$ changes from low to high. When reset exception handling starts the CPU fetches a start address from the exception vector table and starts program execution from that address. All interrupts, including NMI, are disabled during the reset exception-handling sequence and immediately after it ends.

Interrupt Exception Handling and Trap Instruction Exception Handling: When these exception-handling sequences begin, the CPU references the stack pointer (ER7) and pushes the program counter and condition code register on the stack. Next, if the UE bit in the system control register (SYSCR) is set to 1, the CPU sets the I bit in the condition code register to 1. If the UE bit is cleared to 0, the CPU sets both the I bit and the UI bit in the condition code register to 1. Then

the CPU fetches a start address from the exception vector table and execution branches to that address.

Figure 2.14 shows the stack after the exception-handling sequence.

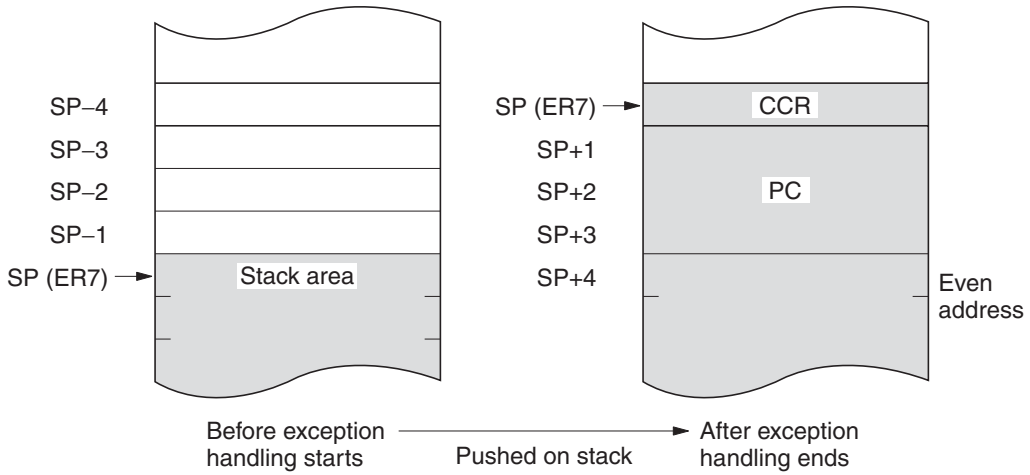

Legend:
CCR: Condition code register
SP: Stack pointer

Notes: 1. PC is the address of the first instruction executed after the return from the exception-handling routine.
2. Registers must be saved and restored by word access or longword access, starting at an even address.

Figure 2.14 Stack Structure after Exception Handling

2.8.5 Bus-Released State

In this state the bus is released to a bus master other than the CPU, in response to a bus request. The bus masters other than the CPU is an external bus master. While the bus is released, the CPU halts except for internal operations. Interrupt requests are not accepted. For details see section 6.6, Bus Arbiter.

2.8.6 Reset State

When the $\overline{\text{RES}}$ input goes low all current processing stops and the CPU enters the reset state. The I bit in the condition code register is set to 1 by a reset. All interrupts are masked in the reset state. Reset exception handling starts when the $\overline{\text{RES}}$ signal changes from low to high.

The reset state can also be entered by a watchdog timer overflow. For details see section 11, Watchdog Timer.

2.8.7 Power-Down State

In the power-down state the CPU stops operating to conserve power. There are three modes: sleep mode, software standby mode, and hardware standby mode.

Sleep Mode: A transition to sleep mode is made if the SLEEP instruction is executed while the SSBY bit is cleared to 0 in the system control register (SYSCR). CPU operations stop immediately after execution of the SLEEP instruction, but the contents of CPU registers are retained.

Software Standby Mode: A transition to software standby mode is made if the SLEEP instruction is executed while the SSBY bit is set to 1 in SYSCR. The CPU and clock halt and all on-chip supporting modules stop operating. The on-chip supporting modules are reset, but as long as a specified voltage is supplied the contents of CPU registers and on-chip RAM are retained. The I/O ports also remain in their existing states.

Hardware Standby Mode: A transition to hardware standby mode is made when the $\overline{\text{STBY}}$ input goes low. As in software standby mode, the CPU and all clocks halt and the on-chip supporting modules are reset, but as long as a specified voltage is supplied, on-chip RAM contents are retained.

For further information see section 18, Power-Down State.

2.9 Basic Operational Timing

2.9.1 Overview

The H8/300H CPU operates according to the system clock (ϕ). The interval from one rise of the system clock to the next rise is referred to as a “state.” A memory cycle or bus cycle consists of two or three states. The CPU uses different methods to access on-chip memory, the on-chip supporting modules, and the external address space. Access to the external address space can be controlled by the bus controller.

2.9.2 On-Chip Memory Access Timing

On-chip memory is accessed in two states. The data bus is 16 bits wide, permitting both byte and word access. Figure 2.15 shows the on-chip memory access cycle. Figure 2.16 indicates the pin states. The H8/3008 has a function for changing the method of outputting addresses from the address pins. For details see section 6.3.5, Address Output Method.

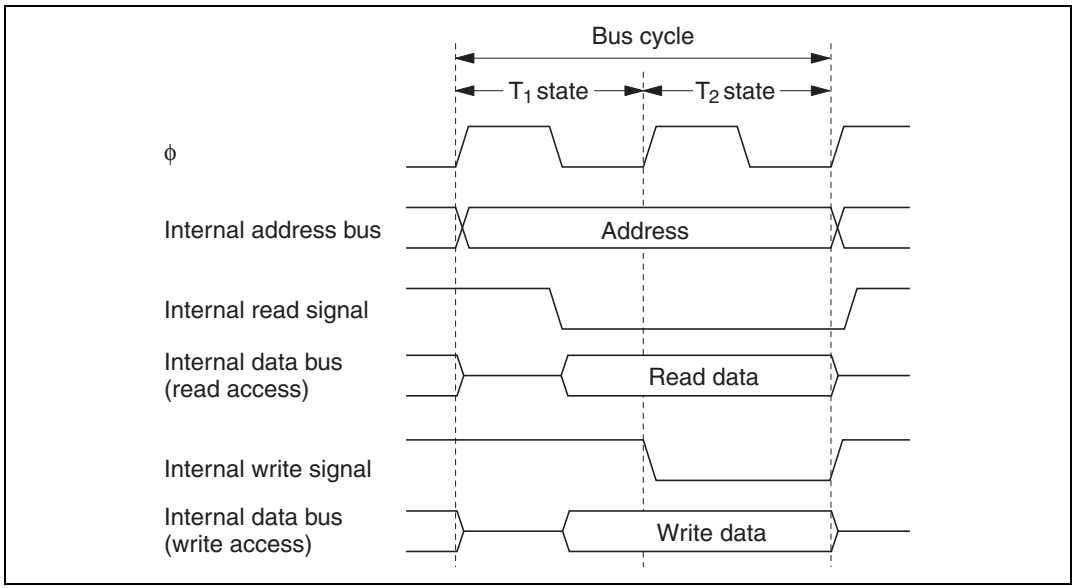

Figure 2.15 On-Chip Memory Access Cycle

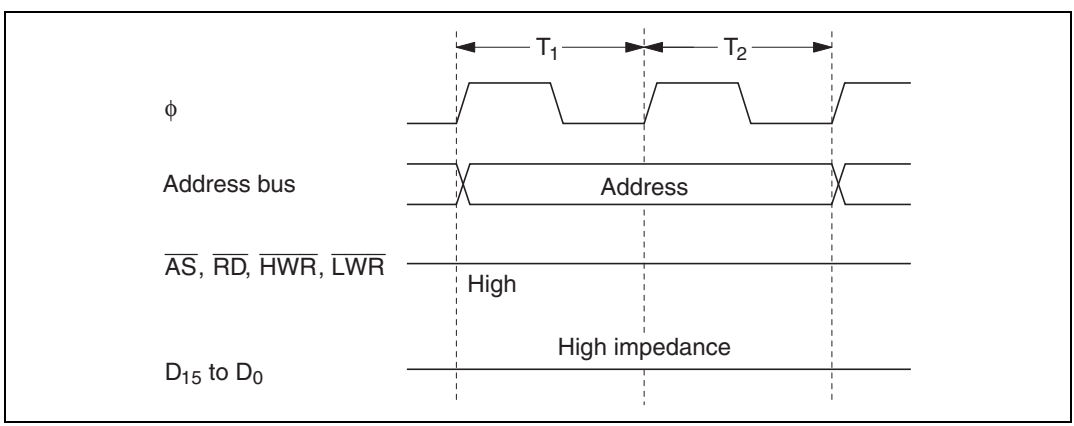

Figure 2.16 Pin States during On-Chip Memory Access (Address Update Mode 1)

2.9.3 On-Chip Supporting Module Access Timing

The on-chip supporting modules are accessed in three states. The data bus is 8 or 16 bits wide, depending on the internal I/O register being accessed. Figure 2.17 shows the on-chip supporting module access timing. Figure 2.18 indicates the pin states.

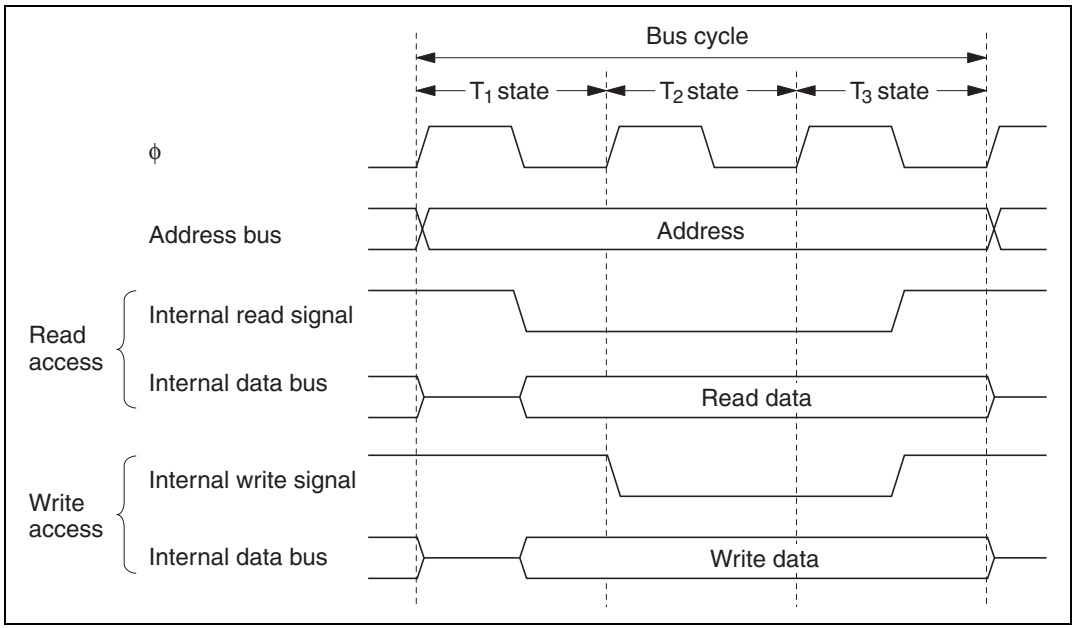

Figure 2.17 Access Cycle for On-Chip Supporting Modules

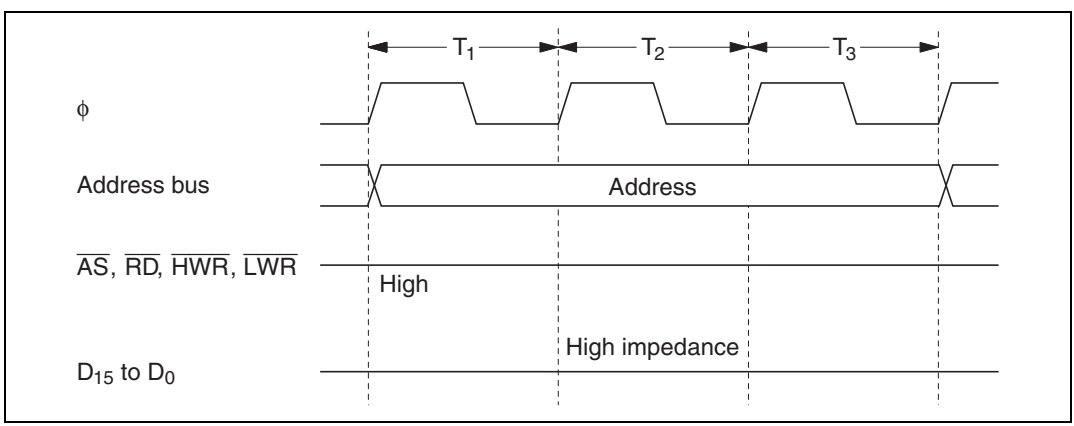

Figure 2.18 Pin States during Access to On-Chip Supporting Modules

2.9.4 Access to External Address Space

The external address space is divided into eight areas (areas 0 to 7). Bus-controller settings determine whether each area is accessed via an 8-bit or 16-bit data bus, and whether it is accessed in two or three states. For details see section 6, Bus Controller.

Section 3 MCU Operating Modes

3.1 Overview

3.1.1 Operating Mode Selection

The H8/3008 has four operating modes (modes 1 to 4) that are selected by the mode pins (MD_2 to MD_0) as indicated in table 3.1. The input at these pins determines the size of the address space and the initial bus mode.

Table 3.1 Operating Mode Selection

Operating Mode	Mode Pins			Description			
	MD_2	MD_1	MD_0	Address Space	Initial Bus Mode*1	On-Chip ROM	On-Chip RAM
—	0	0	0	Setting prohibited	Setting prohibited	Setting prohibited	Setting prohibited
Mode 1	0	0	1	Expanded mode	8 bits	Disabled	Enabled*2
Mode 2	0	1	0	Expanded mode	16 bits	Disabled	Enabled*2
Mode 3	0	1	1	Expanded mode	8 bits	Disabled	Enabled*2
Mode 4	1	0	0	Expanded mode	16 bits	Disabled	Enabled*2
—	1	0	1	Setting prohibited	Setting prohibited	Setting prohibited	Setting prohibited
—	1	1	0	Setting prohibited	Setting prohibited	Setting prohibited	Setting prohibited
—	1	1	1	Setting prohibited	Setting prohibited	Setting prohibited	Setting prohibited

Notes: 1. In modes 1 to 4, an 8-bit or 16-bit data bus can be selected on a per-area basis by settings made in the area bus width control register (ABWCR). For details see section 6, Bus Controller.
2. If the RAME bit in SYSCR is cleared to 0, these addresses become external addresses.

For the address space size there are two choices: 1 Mbyte or 16 Mbyte. The external data bus is either 8 or 16 bits wide depending on ABWCR settings. 8-bit bus mode is used only if 8-bit access is selected for all areas. For details see section 6, Bus Controller.

Modes 1 to 4 are externally expanded modes that enable access to external memory and peripheral devices and disable access to the on-chip ROM. Modes 1 and 2 support a maximum address space of 1 Mbyte. Modes 3 and 4 support a maximum address space of 16 Mbytes.

The H8/3008 can be used only in modes 1 to 4. The inputs at the mode pins must select one of these four modes. The inputs at the mode pins must not be changed during operation. Set the reset state before changing the inputs at these pins.

3.1.2 Register Configuration

The H8/3008 has a mode control register (MDCR) that indicates the inputs at the mode pins (MD_2 to MD_0), and a system control register (SYSCR). Table 3.2 summarizes these registers.

Table 3.2 Registers

Address*	Name	Abbreviation	R/W	Initial Value
H'EE011	Mode control register	MDCR	R	Undetermined
H'EE012	System control register	SYSCR	R/W	H'09

Note: * Lower 20 bits of the address in advanced mode.

3.2 Mode Control Register (MDCR)

MDCR is an 8-bit read-only register that indicates the current operating mode of the H8/3008.

Bit	7	6	5	4	3	2	1	0
	—	—	—	—	—	MDS2	MDS1	MDS0
Initial value	1	1	0	0	0	—*	—*	—*
Read/Write	—	—	—	—	—	R	R	R

Reserved bits

Mode select 2 to 0
Bits indicating the current operating mode

Note: * Determined by pins MD_2 to MD_0.

Bits 7 and 6—Reserved: These bits can not be modified and are always read as 1.

Bits 5 to 3—Reserved: These bits can not be modified and are always read as 0.

Bits 2 to 0—Mode Select 2 to 0 (MDS2 to MDS0): These bits indicate the logic levels at pins MD_2 to MD_0 (the current operating mode). MDS2 to MDS0 correspond to MD_2 to MD_0. MDS2 to

MDS0 are read-only bits. The mode pin (MD_2 to MD_0) levels are latched into these bits when MDCR is read.

3.3 System Control Register (SYSCR)

SYSCR is an 8-bit register that controls the operation of the H8/3008.

Bit	7	6	5	4	3	2	1	0
	SSBY	STS2	STS1	STS0	UE	NMIEG	SSOE	RAME
Initial value	0	0	0	0	1	0	0	1
Read/Write	R/W	R/W	R/W	R/W	R/W	R/W	R/W	R/W

RAM enable
Enables or disables on-chip RAM

Software standby output port enable
Selects the output state of the address bus and bus control signals in software standby mode

NMI edge select
Selects the valid edge of the NMI input

User bit enable
Selects whether to use the UI bit in CCR as a user bit or an interrupt mask bit

Standby timer select 2 to 0
These bits select the waiting time at recovery from software standby mode

Software standby
Enables transition to software standby mode

Bit 7—Software Standby (SSBY): Enables transition to software standby mode. (For further information about software standby mode see section 18, Power-Down State.)

When software standby mode is exited by an external interrupt, and a transition is made to normal operation, this bit remains set to 1. To clear this bit, write 0.

Bit 7 SSBY	Description	
0	SLEEP instruction causes transition to sleep mode	(Initial value)
1	SLEEP instruction causes transition to software standby mode	

Bits 6 to 4—Standby Timer Select 2 to 0 (STS2 to STS0): These bits select the length of time the CPU and on-chip supporting modules wait for the internal clock oscillator to settle when software standby mode is exited by an external interrupt.

When using a crystal oscillator, set these bits so that the waiting time will be at least 7 ms at the system clock rate.

For further information about waiting time selection, see section 18.4.3, Selection of Waiting Time for Exit from Software Standby Mode.

Bit 6 STS2	Bit 5 STS1	Bit 4 STS0	Description	
0	0	0	Waiting time = 8,192 states	(Initial value)
0	0	1	Waiting time = 16,384 states	
0	1	0	Waiting time = 32,768 states	
0	1	1	Waiting time = 65,536 states	
1	0	0	Waiting time = 131,072 states	
1	0	1	Waiting time = 262,144 states	
1	1	0	Waiting time = 1,024 states	
1	1	1	Illegal setting	

Bit 3—User Bit Enable (UE): Selects whether to use the UI bit in the condition code register as a user bit or an interrupt mask bit.

Bit 3 UE	Description	
0	UI bit in CCR is used as an interrupt mask bit	
1	UI bit in CCR is used as a user bit	(Initial value)

Bit 2—NMI Edge Select (NMIEG): Selects the valid edge of the NMI input.

Bit 2 NMIEG	Description	
0	An interrupt is requested at the falling edge of NMI	(Initial value)
1	An interrupt is requested at the rising edge of NMI	

Bit 1—Software Standby Output Port Enable (SSOE): Specifies whether the address bus and bus control signals ($\overline{CS}_0$ to $\overline{CS}_7$, $\overline{AS}$, $\overline{RD}$, $\overline{HWR}$, $\overline{LWR}$) are kept as outputs or fixed high, or placed in the high-impedance state in software standby mode.

Bit 1 SSOE	Description	
0	In software standby mode, the address bus and bus control signals are all high-impedance	(Initial value)
1	In software standby mode, the address bus retains its output state and bus control signals are fixed high	

Bit 0—RAM Enable (RAME): Enables or disables the on-chip RAM. The RAME bit is initialized by the rising edge of the $\overline{RES}$ signal. It is not initialized in software standby mode.

Bit 0 RAME	Description	
0	On-chip RAM is disabled	
1	On-chip RAM is enabled	(Initial value)

3.4 Operating Mode Descriptions

3.4.1 Mode 1

Ports 1, 2, and 5 function as address pins A_{19} to A_0, permitting access to a maximum 1-Mbyte address space. The initial bus mode after a reset is 8 bits, with 8-bit access to all areas. If at least one area is designated for 16-bit access in ABWCR, the bus mode switches to 16 bits.

3.4.2 Mode 2

Ports 1, 2, and 5 function as address pins A_{19} to A_0, permitting access to a maximum 1-Mbyte address space. The initial bus mode after a reset is 16 bits, with 16-bit access to all areas. If all areas are designated for 8-bit access in ABWCR, the bus mode switches to 8 bits.

3.4.3 Mode 3

Ports 1, 2, and 5 and part of port A function as address pins A_{23} to A_0, permitting access to a maximum 16-Mbyte address space. The initial bus mode after a reset is 8 bits, with 8-bit access to all areas. If at least one area is designated for 16-bit access in ABWCR, the bus mode switches to 16 bits. A_{23} to A_{21} are valid when 0 is written in bits 7 to 5 of the bus release control register (BRCR). (In this mode A_{20} is always used for address output.)

3.4.4 Mode 4

Ports 1, 2, and 5 and part of port A function as address pins A_{23} to A_0, permitting access to a maximum 16-Mbyte address space. The initial bus mode after a reset is 16 bits, with 16-bit access to all areas. If all areas are designated for 8-bit access in ABWCR, the bus mode switches to 8 bits. A_{23} to A_{21} are valid when 0 is written in bits 7 to 5 of BRCR. (In this mode A_{20} is always used for address output.)

3.4.5 Modes 5 to 7

These modes cannot be used in the H8/3008. Pin settings must not be made for these modes.

3.5 Pin Functions in Each Operating Mode

The pin functions of ports 1 to 5 and port A vary depending on the operating mode. Table 3.3 indicates their functions in each operating mode.

Table 3.3 Pin Functions in Each Mode

Port	Mode 1	Mode 2	Mode 3	Mode 4
Port 1	A_7 to A_0	A_7 to A_0	A_7 to A_0	A_7 to A_0
Port 2	A_{15} to A_8	A_{15} to A_8	A_{15} to A_8	A_{15} to A_8
Port 3	D_{15} to D_8	D_{15} to D_8	D_{15} to D_8	D_{15} to D_8
Port 4	$P4_7$ to $P4_0$*1	D_7 to D_0*1	$P4_7$ to $P4_0$*1	D_7 to D_0*1
Port 5	A_{19} to A_{16}	A_{19} to A_{16}	A_{19} to A_{16}	A_{19} to A_{16}
Port A	PA_7 to PA_4	PA_7 to PA_4	PA_6 to PA_4, A_{20}*2	PA_6 to PA_4, A_{20}*2

Notes: 1. Initial state. The bus mode can be switched by settings in ABWCR. These pins function as $P4_7$ to $P4_0$ in 8-bit bus mode, and as D_7 to D_0 in 16-bit bus mode.

2. Initial state. A_{20} is always an address output pin. PA_6 to PA_4 are switched over to A_{23} to A_{21} output by writing 0 in bits 7 to 5 of BRCR.

3.6 Memory Map in Each Operating Mode

Figure 3.1 shows memory map of the H8/3008. In the expanded modes, the address space is divided into eight areas.

The initial bus mode differs between modes 1 and 2, and also between modes 3 and 4.

The address locations of the on-chip RAM and on-chip registers differ between the 1-Mbyte modes (modes 1 and 2) and the 16-Mbyte modes (modes 3 and 4). The address range specifiable by the CPU in the 8- and 16-bit absolute addressing modes (@aa:8 and @aa:16) also differs.

3.6.1 Reserved Areas

The H8/3008 memory map includes reserved areas to which access (reading or writing) is prohibited. Normal operation cannot be guaranteed if the following reserved areas are accessed.

Reserved Area in Internal I/O Register Space: The H8/3008 internal I/O register space includes a reserved area to which access is prohibited. For details see Appendix B, Internal I/O Registers.

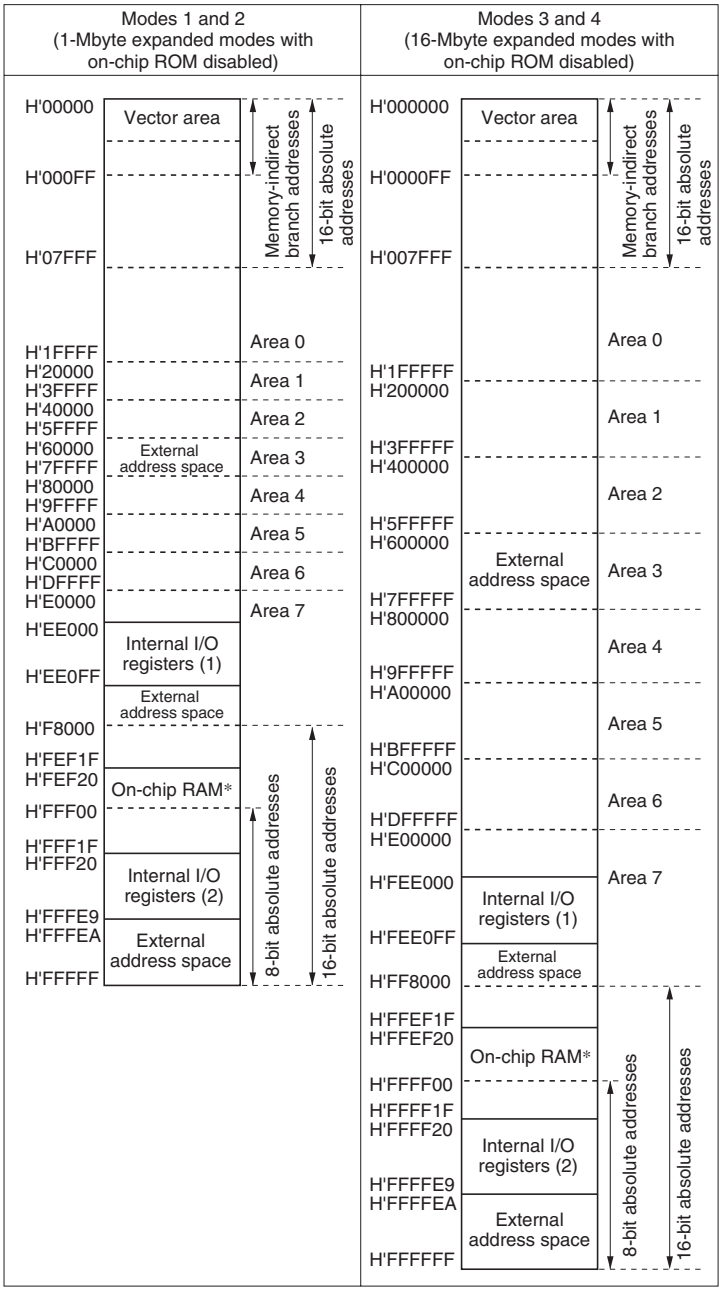

Note: * External addresses can be accessed by disabling on-chip RAM.

Figure 3.1 Memory Map of H8/3008 in Each Operating Mode

Section 4 Exception Handling

4.1 Overview

4.1.1 Exception Handling Types and Priority

As table 4.1 indicates, exception handling may be caused by a reset, interrupt, or trap instruction. Exception handling is prioritized as shown in table 4.1. If two or more exceptions occur simultaneously, they are accepted and processed in priority order. Trap instruction exceptions are accepted at all times in the program execution state.

Table 4.1 Exception Types and Priority

Priority	Exception Type	Start of Exception Handling
High	Reset	Starts immediately after a low-to-high transition at the $\overline{\text{RES}}$ pin
↑	Interrupt	Interrupt requests are handled when execution of the current instruction or handling of the current exception is completed
Low	Trap instruction (TRAPA)	Started by execution of a trap instruction (TRAPA)

4.1.2 Exception Handling Operation

Exceptions originate from various sources. Trap instructions and interrupts are handled as follows.

1. The program counter (PC) and condition code register (CCR) are pushed onto the stack.
2. The CCR interrupt mask bit is set to 1.
3. A vector address corresponding to the exception source is generated, and program execution starts from that address.

Note: For a reset exception, steps 2 and 3 above are carried out.

4.1.3 Exception Vector Table

The exception sources are classified as shown in figure 4.1. Different vectors are assigned to different exception sources. Table 4.2 lists the exception sources and their vector addresses.

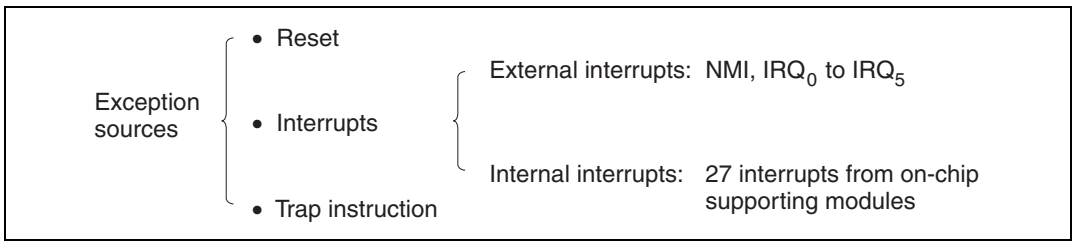

Figure 4.1 Exception Sources

Table 4.2 Exception Vector Table

Exception Source	Vector Number	Vector Address*1	
		Advanced Mode	Normal Mode
Reset	0	H'0000 to H'0003	H'0000 to H'0001
Reserved for system use	1	H'0004 to H'0007	H'0002 to H'0003
	2	H'0008 to H'000B	H'0004 to H'0005
	3	H'000C to H'000F	H'0006 to H'0007
	4	H'0010 to H'0013	H'0008 to H'0009
	5	H'0014 to H'0017	H'000A to H'000B
	6	H'0018 to H'001B	H'000C to H'000D
External interrupt (NMI)	7	H'001C to H'001F	H'000E to H'000F
Trap instruction (4 sources)	8	H'0020 to H'0023	H'0010 to H'0011
	9	H'0024 to H'0027	H'0012 to H'0013
	10	H'0028 to H'002B	H'0014 to H'0015
	11	H'002C to H'002F	H'0016 to H'0017
External interrupt IRQ_0	12	H'0030 to H'0033	H'0018 to H'0019
External interrupt IRQ_1	13	H'0034 to H'0037	H'001A to H'001B
External interrupt IRQ_2	14	H'0038 to H'003B	H'001C to H'001D
External interrupt IRQ_3	15	H'003C to H'003F	H'001E to H'001F
External interrupt IRQ_4	16	H'0040 to H'0043	H'0020 to H'0021
External interrupt IRQ_5	17	H'0044 to H'0047	H'0022 to H'0023
Reserved for system use	18	H'0048 to H'004B	H'0024 to H'0025
	19	H'004C to H'004F	H'0026 to H'0027
Internal interrupts*2	20 to 63	H'0050 to H'0053 to H'00FC to H'00FF	H'0028 to H'0029 to H'007E to H'007F

Notes: 1. Lower 16 bits of the address.
2. For the internal interrupt vectors, see section 5.3.3, Interrupt Vector Table.

4.2 Reset

4.2.1 Overview

A reset is the highest-priority exception. When the $\overline{\text{RES}}$ pin goes low, all processing halts and the chip enters the reset state. A reset initializes the internal state of the CPU and the registers of the on-chip supporting modules. Reset exception handling begins when the $\overline{\text{RES}}$ pin changes from low to high.

The chip can also be reset by overflow of the watchdog timer. For details see section 11, Watchdog Timer.

4.2.2 Reset Sequence

The chip enters the reset state when the $\overline{\text{RES}}$ pin goes low.

To ensure that the chip is reset, hold the $\overline{\text{RES}}$ pin low for at least 20 ms at power-up. To reset the chip during operation, hold the $\overline{\text{RES}}$ pin low for at least 10 system clock (ϕ) cycles. In the versions with on-chip flash memory, the $\overline{\text{RES}}$ pin must be held low for at least 20 system clock cycles. See appendix D.2, Pin States at Reset, for the states of the pins in the reset state.

When the $\overline{\text{RES}}$ pin goes high after being held low for the necessary time, the chip starts reset exception handling as follows.

- The internal state of the CPU and the registers of the on-chip supporting modules are initialized, and the I bit is set to 1 in CCR.
- The contents of the reset vector address (H'0000 to H'0003 in advanced mode, H'0000 to H'0001 in normal mode) are read, and program execution starts from the address indicated in the vector address.

Figure 4.2 shows the reset sequence in modes 1 and 3. Figure 4.3 shows the reset sequence in modes 2 and 4.

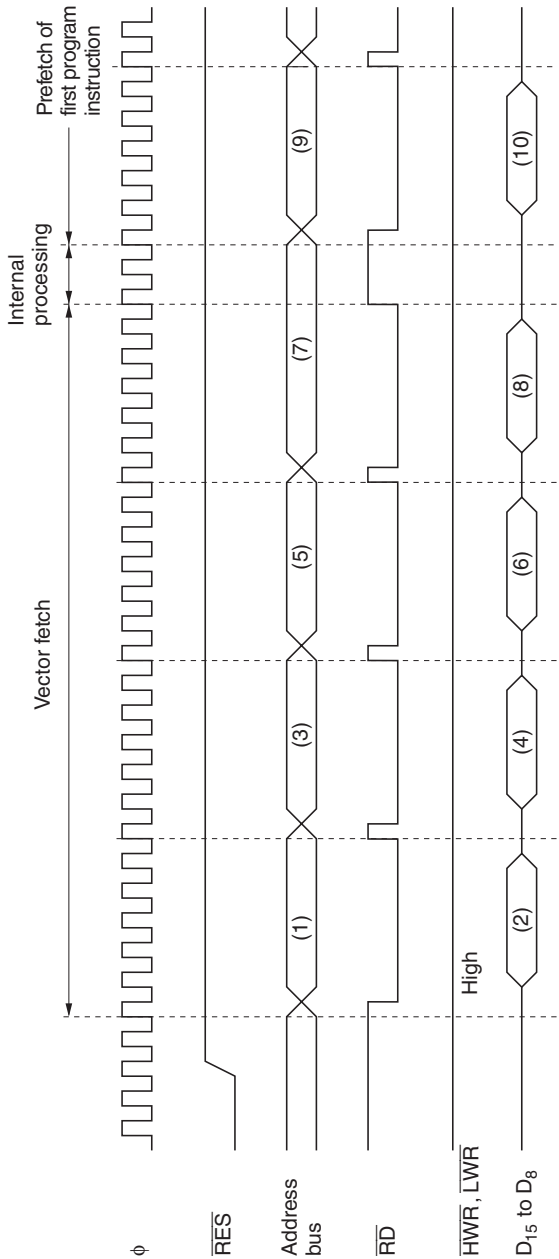

(1), (3), (5), (7) Address of reset exception handling vector: (1) = H'000000, (3) = H'000001, (5) = H'000002, (7) = H'000003
(2), (4), (6), (8) Start address (contents of reset exception handling vector address)
(9) Start address
(10) First instruction of program

Note: After a reset, the wait-state controller inserts three wait states in every bus cycle.

Figure 4.2 Reset Sequence (Modes 1 and 3)

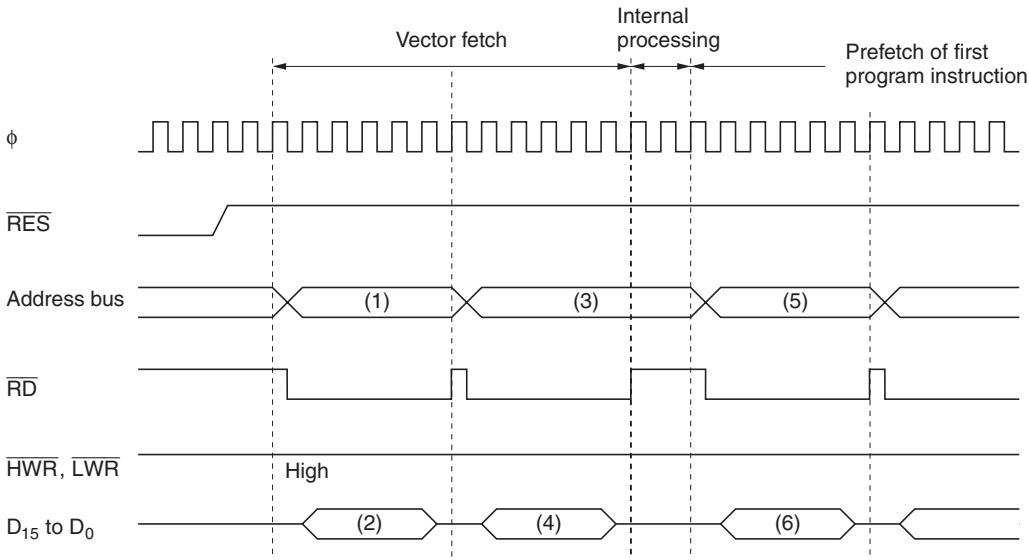

(1), (3) Address of reset exception handling vector: (1) = H'000000, (3) = H'000002
(2), (4) Start address (contents of reset exception handling vector address)
(5) Start address
(6) First instruction of program

Note: After a reset, the wait-state controller inserts three wait states in every bus cycle.

Figure 4.3 Reset Sequence (Modes 2 and 4)

4.2.3 Interrupts after Reset

If an interrupt is accepted after a reset but before the stack pointer (SP) is initialized, PC and CCR will not be saved correctly, leading to a program crash. To prevent this, all interrupt requests, including NMI, are disabled immediately after a reset exception handling. The first instruction of the program is always executed immediately after the reset state ends. This instruction should initialize the stack pointer (example: MOV.L #xx:32, SP).

4.3 Interrupts

Interrupt exception handling can be requested by seven external sources (NMI, IRQ_0 to IRQ_5), and 27 internal sources in the on-chip supporting modules. Figure 4.4 classifies the interrupt sources and indicates the number of interrupts of each type.

The on-chip supporting modules that can request interrupts are the watchdog timer (WDT), 16-bit timer, 8-bit timer, serial communication interface (SCI), and A/D converter. Each interrupt source has a separate vector address.

NMI is the highest-priority interrupt and is always accepted. Interrupts are controlled by the interrupt controller. The interrupt controller can assign interrupts other than NMI to two priority levels, and arbitrate between simultaneous interrupts. Interrupt priorities are assigned in interrupt priority registers A and B (IPRA and IPRB) in the interrupt controller.

For details on interrupts see section 5, Interrupt Controller.

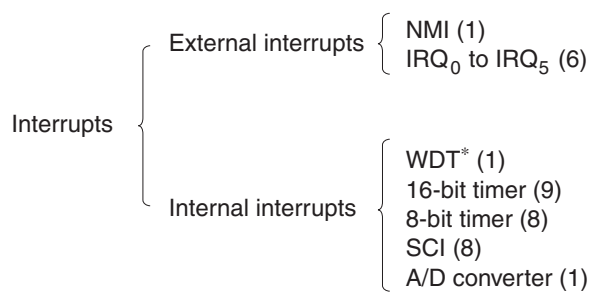

Notes: Numbers in parentheses are the number of interrupt sources.
* When the watchdog timer is used as an interval timer, it generates an interrupt request at every counter overflow.

Figure 4.4 Interrupt Sources and Number of Interrupts

4.4 Trap Instruction

Trap instruction exception handling starts when a TRAPA instruction is executed. If the UE bit is set to 1 in the system control register (SYSCR), the exception handling sequence sets the I bit to 1 in CCR. If the UE bit is 0, the I and UI bits are both set to 1 in CCR. The TRAPA instruction fetches a start address from a vector table entry corresponding to a vector number from 0 to 3, which is specified in the instruction code.

4.5 Stack Status after Exception Handling

Figure 4.5 shows the stack after completion of trap instruction exception handling and interrupt exception handling.

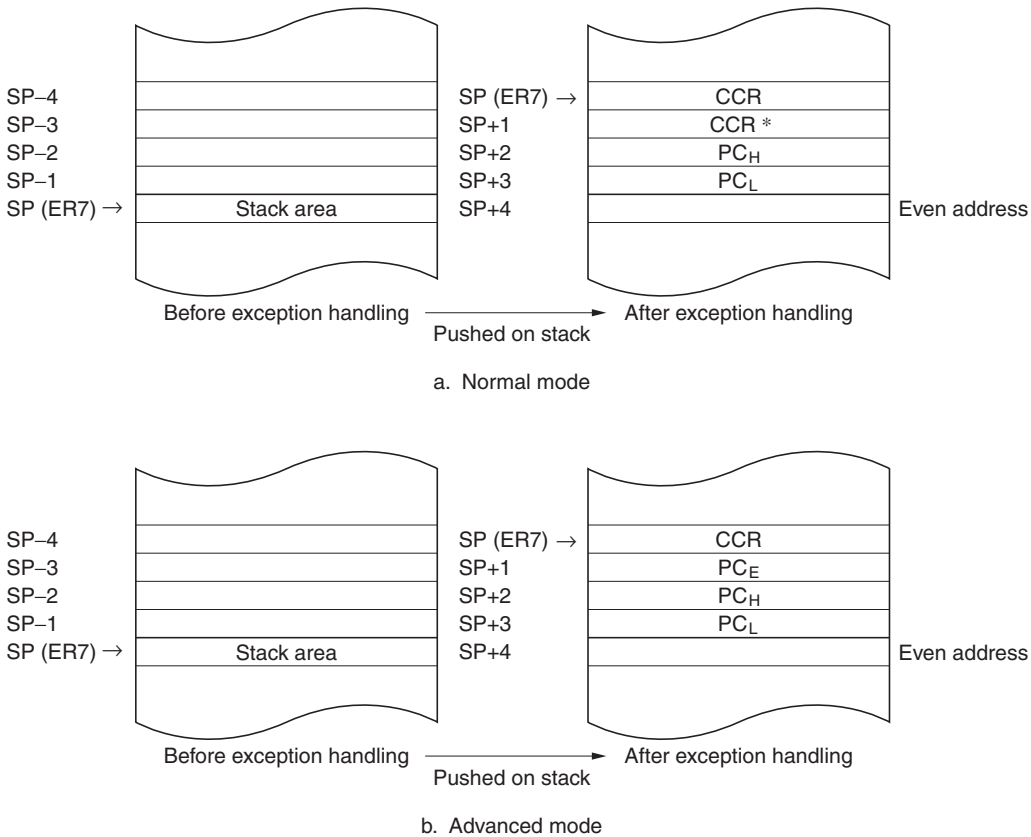

Legend:
PC_E: Bits 23 to 16 of program counter (PC)
PC_H: Bits 15 to 8 of program counter (PC)
PC_L: Bits 7 to 0 of program counter (PC)
CCR: Condition code register
SP: Stack pointer

Notes: PC indicates the address of the first instruction that will be executed after return.
Registers must be saved in word or longword size at even addresses.
* Ignored at return.

Figure 4.5 Stack after Completion of Exception Handling

4.6 Notes on Stack Usage

When accessing word data or longword data, the H8/3008 regards the lowest address bit as 0. The stack should always be accessed by word access or longword access, and the value of the stack pointer (SP:ER7) should always be kept even.

Use the following instructions to save registers:

PUSH.W Rn (or MOV.W Rn, @–SP)
PUSH.L ERn (or MOV.L ERn, @–SP)

Use the following instructions to restore registers:

POP.W Rn (or MOV.W @SP+, Rn)
POP.L ERn (or MOV.L @SP+, ERn)

Setting SP to an odd value may lead to a malfunction. Figure 4.6 shows an example of what happens when the SP value is odd.

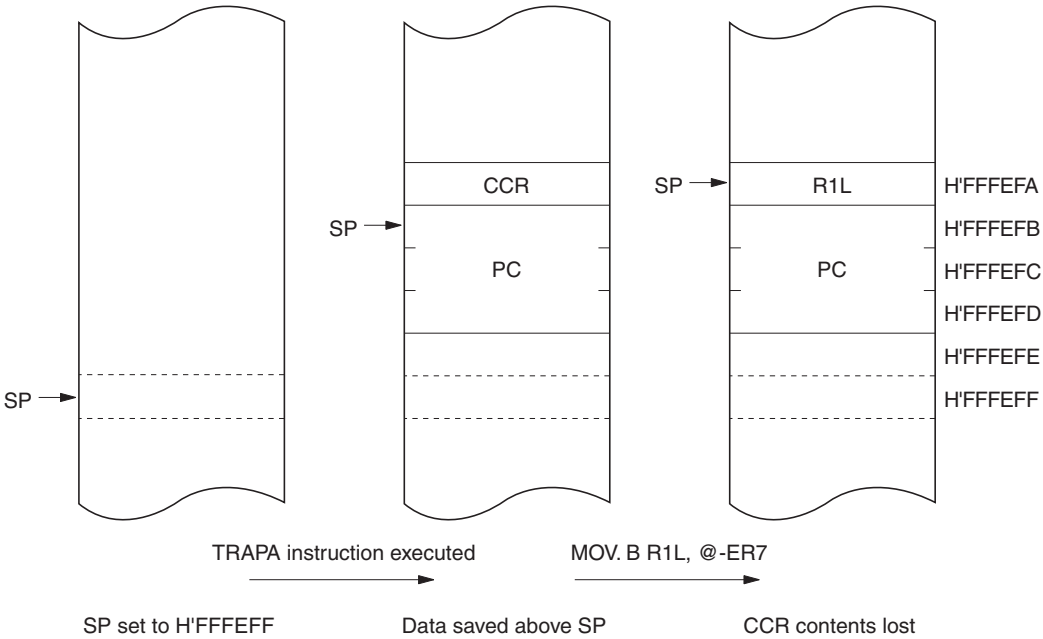

Legend:
CCR: Condition code register
PC: Program counter
R1L: General register R1L
SP: Stack pointer

Note: The diagram illustrates modes 3 and 4.

Figure 4.6 Operation when SP Value is Odd

Section 5 Interrupt Controller

5.1 Overview

5.1.1 Features

The interrupt controller has the following features:

- Interrupt priority registers (IPRs) for setting interrupt priorities
  Interrupts other than NMI can be assigned to two priority levels on a module-by-module basis in interrupt priority registers A and B (IPRA and IPRB).
- Three-level enabling/disabling by the I and UI bits in the CPU's condition code register (CCR) and the UE bit in the system control register (SYSCR)
- Seven external interrupt pins

NMI has the highest priority and is always accepted; either the rising or falling edge can be selected. For each of IRQ_5 to IRQ_0, sensing of the falling edge or level sensing can be selected independently.

5.1.2 Block Diagram

Figure 5.1 shows a block diagram of the interrupt controller.

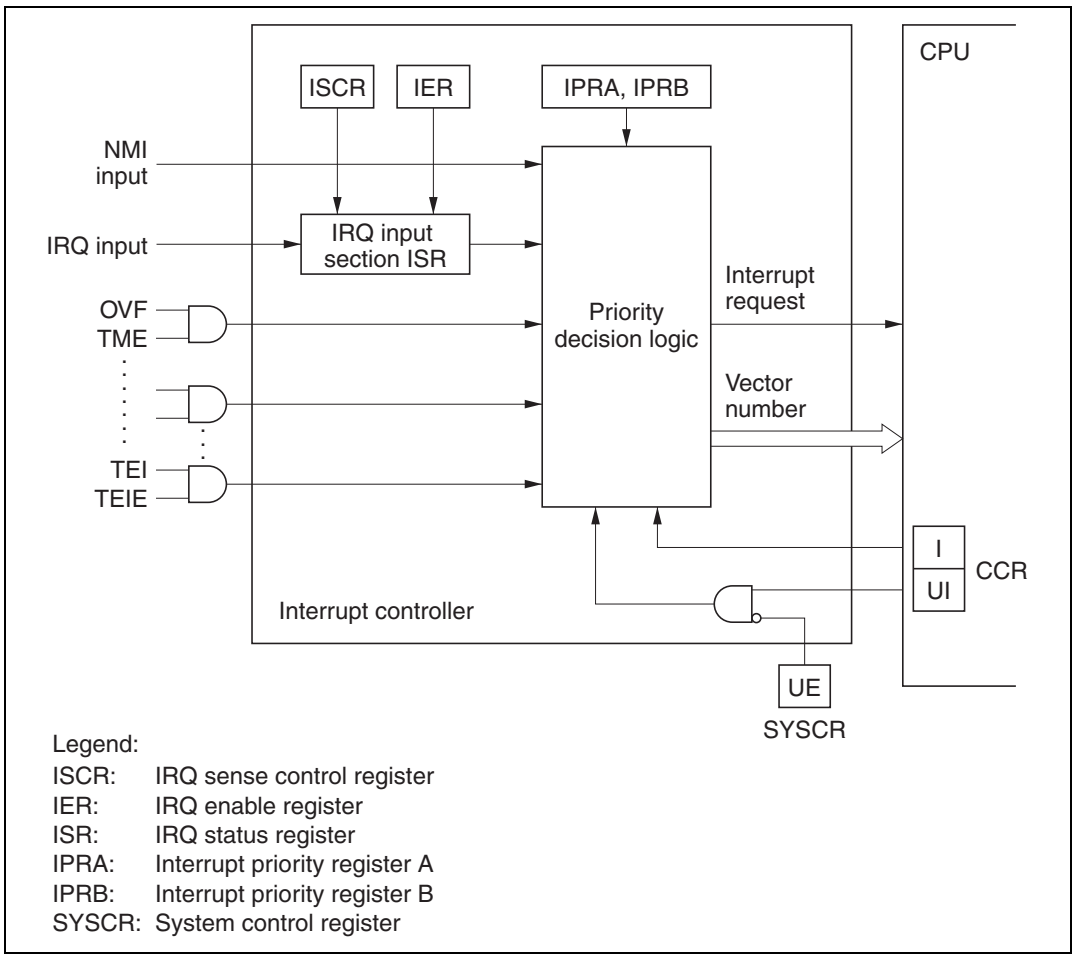

Figure 5.1 Interrupt Controller Block Diagram

5.1.3 Pin Configuration

Table 5.1 lists the interrupt pins.

Table 5.1 Interrupt Pins

Name	Abbreviation	I/O	Function
Nonmaskable interrupt	NMI	Input	Nonmaskable interrupt, rising edge or falling edge selectable
External interrupt request 5 to 0	$\overline{IRQ}_5$ to $\overline{IRQ}_0$	Input	Maskable interrupts, falling edge or level sensing selectable

5.1.4 Register Configuration

Table 5.2 lists the registers of the interrupt controller.

Table 5.2 Interrupt Controller Registers

Address*[1]	Name	Abbreviation	R/W	Initial Value
H'EE012	System control register	SYSCR	R/W	H'09
H'EE014	IRQ sense control register	ISCR	R/W	H'00
H'EE015	IRQ enable register	IER	R/W	H'00
H'EE016	IRQ status register	ISR	R/(W)*[2]	H'00
H'EE018	Interrupt priority register A	IPRA	R/W	H'00
H'EE019	Interrupt priority register B	IPRB	R/W	H'00

Notes: 1. Lower 20 bits of the address in advanced mode.
2. Only 0 can be written, to clear flags.

5.2 Register Descriptions

5.2.1 System Control Register (SYSCR)

SYSCR is an 8-bit readable/writable register that controls software standby mode, selects the action of the UI bit in CCR, selects the NMI edge, and enables or disables the on-chip RAM.

Only bits 3 and 2 are described here. For the other bits, see section 3.3, System Control Register (SYSCR).

SYSCR is initialized to H'09 by a reset and in hardware standby mode. It is not initialized in software standby mode.

Bit	7	6	5	4	3	2	1	0
	SSBY	STS2	STS1	STS0	UE	NMIEG	SSOE	RAME
Initial value	0	0	0	0	1	0	0	1
Read/Write	R/W	R/W	R/W	R/W	R/W	R/W	R/W	R/W

RAM enable

Software standby output port enable

NMI edge select
Selects the NMI input edge

Standby timer select 2 to 0

Software standby

User bit enable
Selects whether to use the UI bit in CCR as a user bit or interrupt mask bit

Bit 3—User Bit Enable (UE): Selects whether to use the UI bit in CCR as a user bit or an interrupt mask bit.

Bit 3 UE	Description	
0	UI bit in CCR is used as interrupt mask bit	
1	UI bit in CCR is used as user bit	(Initial value)

Bit 2—NMI Edge Select (NMIEG): Selects the NMI input edge.

Bit 2 NMIEG	Description	
0	Interrupt is requested at falling edge of NMI input	(Initial value)
1	Interrupt is requested at rising edge of NMI input	

5.2.2 Interrupt Priority Registers A and B (IPRA, IPRB)

IPRA and IPRB are 8-bit readable/writable registers that control interrupt priority.

Interrupt Priority Register A (IPRA): IPRA is an 8-bit readable/writable register in which interrupt priority levels can be set.

Bit	7	6	5	4	3	2	1	0
	IPRA7	IPRA6	IPRA5	IPRA4	IPRA3	IPRA2	IPRA1	IPRA0
Initial value	0	0	0	0	0	0	0	0
Read/Write	R/W	R/W	R/W	R/W	R/W	R/W	R/W	R/W

Priority level A0
Selects the priority level of 16-bit timer channel 2 interrupt requests

Priority level A1
Selects the priority level of 16-bit timer channel 1 interrupt requests

Priority level A2
Selects the priority level of 16-bit timer channel 0 interrupt requests

Priority level A3
Selects the priority level of WDT, and A/D converter interrupt requests

Priority level A4
Selects the priority level of IRQ_4 and IRQ_5 interrupt requests

Priority level A5
Selects the priority level of IRQ_2 and IRQ_3 interrupt requests

Priority level A6
Selects the priority level of IRQ_1 interrupt requests

Priority level A7
Selects the priority level of IRQ_0 interrupt requests

IPRA is initialized to H'00 by a reset and in hardware standby mode.

Bit 7—Priority Level A7 (IPRA7): Selects the priority level of IRQ_0 interrupt requests.

Bit 7 IPRA7	Description	
0	IRQ_0 interrupt requests have priority level 0 (low priority)	(Initial value)
1	IRQ_0 interrupt requests have priority level 1 (high priority)	

Bit 6—Priority Level A6 (IPRA6): Selects the priority level of IRQ_1 interrupt requests.

Bit 6 IPRA6	Description	
0	IRQ_1 interrupt requests have priority level 0 (low priority)	(Initial value)
1	IRQ_1 interrupt requests have priority level 1 (high priority)	

Bit 5—Priority Level A5 (IPRA5): Selects the priority level of IRQ_2 and IRQ_3 interrupt requests.

Bit 5 IPRA5	Description	
0	IRQ_2 and IRQ_3 interrupt requests have priority level 0 (low priority)	(Initial value)
1	IRQ_2 and IRQ_3 interrupt requests have priority level 1 (high priority)	

Bit 4—Priority Level A4 (IPRA4): Selects the priority level of IRQ_4 and IRQ_5 interrupt requests.

Bit 4 IPRA4	Description	
0	IRQ_4 and IRQ_5 interrupt requests have priority level 0 (low priority)	(Initial value)
1	IRQ_4 and IRQ_5 interrupt requests have priority level 1 (high priority)	

Bit 3—Priority Level A3 (IPRA3): Selects the priority level of WDT, and A/D converter interrupt requests.

Bit 3 IPRA3	Description	
0	WDT, and A/D converter interrupt requests have priority level 0 (low priority)	(Initial value)
1	WDT, and A/D converter interrupt requests have priority level 1 (high priority)	

Bit 2—Priority Level A2 (IPRA2): Selects the priority level of 16-bit timer channel 0 interrupt requests.

Bit 2 IPRA2	Description
0	16-bit timer channel 0 interrupt requests have priority level 0 (low priority) (Initial value)
1	16-bit timer channel 0 interrupt requests have priority level 1 (high priority)

Bit 1—Priority Level A1 (IPRA1): Selects the priority level of 16-bit timer channel 1 interrupt requests.

Bit 1 IPRA1	Description
0	16-bit timer channel 1 interrupt requests have priority level 0 (low priority) (Initial value)
1	16-bit timer channel 1 interrupt requests have priority level 1 (high priority)

Bit 0—Priority Level A0 (IPRA0): Selects the priority level of 16-bit timer channel 2 interrupt requests.

Bit 0 IPRA0	Description
0	16-bit timer channel 2 interrupt requests have priority level 0 (low priority) (Initial value)
1	16-bit timer channel 2 interrupt requests have priority level 1 (high priority)

Interrupt Priority Register B (IPRB): IPRB is an 8-bit readable/writable register in which interrupt priority levels can be set.

Bit	7	6	5	4	3	2	1	0
	IPRB7	IPRB6	—	—	IPRB3	IPRB2	—	—
Initial value	0	0	0	0	0	0	0	0
Read/Write	R/W	R/W	R/W	R/W	R/W	R/W	R/W	R/W

Reserved bit

Priority level B2
Selects the priority level of SCI channel 1 interrupt requests

Priority level B3
Selects the priority level of SCI channel 0 interrupt requests

Reserved bits

Priority level B6
Selects the priority level of 8-bit timer channel 2, 3 interrupt requests

Priority level B7
Selects the priority level of 8-bit timer channel 0, 1 interrupt requests

IPRB is initialized to H'00 by a reset and in hardware standby mode.

Bit 7—Priority Level B7 (IPRB7): Selects the priority level of 8-bit timer channel 0, 1 interrupt requests.

Bit 7 IPRB7	Description
0	8-bit timer channel 0 and 1 interrupt requests have priority level 0 (low priority) (Initial value)
1	8-bit timer channel 0 and 1 interrupt requests have priority level 1 (high priority)

Bit 6—Priority Level B6 (IPRB6): Selects the priority level of 8-bit timer channel 2, 3 interrupt requests.

Bit 6 IPRB6	Description
0	8-bit timer channel 2 and 3 interrupt requests have priority level 0 (low priority) (Initial value)
1	8-bit timer channel 2 and 3 interrupt requests have priority level 1 (high priority)

Bits 5 and 4—Reserved: These bits can be written and read, but they do not affect interrupt priority.

Bit 3—Priority Level B3 (IPRB3): Selects the priority level of SCI channel 0 interrupt requests.

Bit 3 IPRB3	Description
0	SCI channel 0 interrupt requests have priority level 0 (low priority) (Initial value)
1	SCI channel 0 interrupt requests have priority level 1 (high priority)

Bit 2—Priority Level B2 (IPRB2): Selects the priority level of SCI channel 1 interrupt requests.

Bit 2 IPRB2	Description
0	SCI channel 1 interrupt requests have priority level 0 (low priority) (Initial value)
1	SCI channel 1 interrupt requests have priority level 1 (high priority)

Bits 1 and 0—Reserved: These bits can be written and read, but they do not affect interrupt priority.

5.2.3 IRQ Status Register (ISR)

ISR is an 8-bit readable/writable register that indicates the status of IRQ_5 to IRQ_0 interrupt requests.

Bit	7	6	5	4	3	2	1	0
	—	—	IRQ5F	IRQ4F	IRQ3F	IRQ2F	IRQ1F	IRQ0F
Initial value	0	0	0	0	0	0	0	0
Read/Write	—	—	R/(W)*	R/(W)*	R/(W)*	R/(W)*	R/(W)*	R/(W)*

Reserved bits

IRQ_5 to IRQ_0 flags
These bits indicate IRQ_5 to IRQ_0 flag interrupt request status

Note: * Only 0 can be written, to clear flags.

ISR is initialized to H'00 by a reset and in hardware standby mode.

Bits 7 and 6—Reserved: These bits can not be modified and are always read as 0.

Bits 5 to 0—IRQ_5 to IRQ_0 Flags (IRQ5F to IRQ0F): These bits indicate the status of IRQ_5 to IRQ_0 interrupt requests.

Bits 5 to 0 IRQ5F to IRQ0F	Description
0	[Clearing conditions] (Initial value) 0 is written in IRQnF after reading the IRQnF flag when IRQnF = 1. IRQnSC = 0, $\overline{\text{IRQn}}$ input is high, and interrupt exception handling is carried out. IRQnSC = 1 and IRQn interrupt exception handling is carried out.
1	[Setting conditions] IRQnSC = 0 and $\overline{\text{IRQn}}$ input is low. IRQnSC = 1 and $\overline{\text{IRQn}}$ input changes from high to low.

Note: n = 5 to 0

5.2.4 IRQ Enable Register (IER)

IER is an 8-bit readable/writable register that enables or disables IRQ_5 to IRQ_0 interrupt requests.

Bit	7	6	5	4	3	2	1	0
	—	—	IRQ5E	IRQ4E	IRQ3E	IRQ2E	IRQ1E	IRQ0E
Initial value	0	0	0	0	0	0	0	0
Read/Write	R/W	R/W	R/W	R/W	R/W	R/W	R/W	R/W

Reserved bits

IRQ_5 to IRQ_0 enable
These bits enable or disable IRQ_5 to IRQ_0 interrupts

IER is initialized to H'00 by a reset and in hardware standby mode.

Bits 7 and 6—Reserved: These bits can be written and read, but they do not enable or disable interrupts.

Bits 5 to 0—IRQ_5 to IRQ_0 Enable (IRQ5E to IRQ0E): These bits enable or disable IRQ_5 to IRQ_0 interrupts.

Bits 5 to 0 IRQ5E to IRQ0E	Description	
0	IRQ_5 to IRQ_0 interrupts are disabled	(Initial value)
1	IRQ_5 to IRQ_0 interrupts are enabled	

5.2.5 IRQ Sense Control Register (ISCR)

ISCR is an 8-bit readable/writable register that selects level sensing or falling-edge sensing of the inputs at pins $\overline{IRQ_5}$ to $\overline{IRQ_0}$.

Bit	7	6	5	4	3	2	1	0
	—	—	IRQ5SC	IRQ4SC	IRQ3SC	IRQ2SC	IRQ1SC	IRQ0SC
Initial value	0	0	0	0	0	0	0	0
Read/Write	R/W	R/W	R/W	R/W	R/W	R/W	R/W	R/W

Reserved bits

IRQ_5 to IRQ_0 sense control
These bits select level sensing or falling-edge sensing for IRQ_5 to IRQ_0 interrupts

ISCR is initialized to H'00 by a reset and in hardware standby mode.

Bits 7 and 6—Reserved: These bits can be written and read, but they do not select level or falling-edge sensing.

Bits 5 to 0—IRQ_5 to IRQ_0 Sense Control (IRQ5SC to IRQ0SC): These bits select whether interrupts IRQ_5 to IRQ_0 are requested by level sensing of pins $\overline{IRQ_5}$ to $\overline{IRQ_0}$, or by falling-edge sensing.

Bits 5 to 0 IRQ5SC to IRQ0SC	Description	
0	Interrupts are requested when $\overline{IRQ_5}$ to $\overline{IRQ_0}$ inputs are low	(Initial value)
1	Interrupts are requested by falling-edge input at $\overline{IRQ_5}$ to $\overline{IRQ_0}$	

5.3 Interrupt Sources

The interrupt sources include external interrupts (NMI, IRQ_5 to IRQ_0) and 27 internal interrupts.

5.3.1 External Interrupts

There are seven external interrupts: NMI, and IRQ_5 to IRQ_0. Of these, NMI, IRQ_2, IRQ_1, and IRQ_0 can be used to exit software standby mode.

NMI: NMI is the highest-priority interrupt and is always accepted, regardless of the states of the I and UI bits in CCR. The NMIEG bit in SYSCR selects whether an interrupt is requested by the rising or falling edge of the input at the NMI pin. NMI interrupt exception handling has vector number 7.

IRQ_5 to IRQ_0 Interrupts: These interrupts are requested by input signals at pins $\overline{IRQ_5}$ to $\overline{IRQ_0}$. The IRQ_5 to IRQ_0 interrupts have the following features.

- ISCR settings can select whether an interrupt is requested by the low level of the input at pins $\overline{IRQ_5}$ to $\overline{IRQ_0}$, or by the falling edge.
- IER settings can enable or disable the IRQ_5 to IRQ_0 interrupts. Interrupt priority levels can be assigned by four bits in IPRA (IPRA7 to IPRA4).
- The status of IRQ_5 to IRQ_0 interrupt requests is indicated in ISR. The ISR flags can be cleared to 0 by software.

Figure 5.2 shows a block diagram of interrupts IRQ_5 to IRQ_0.

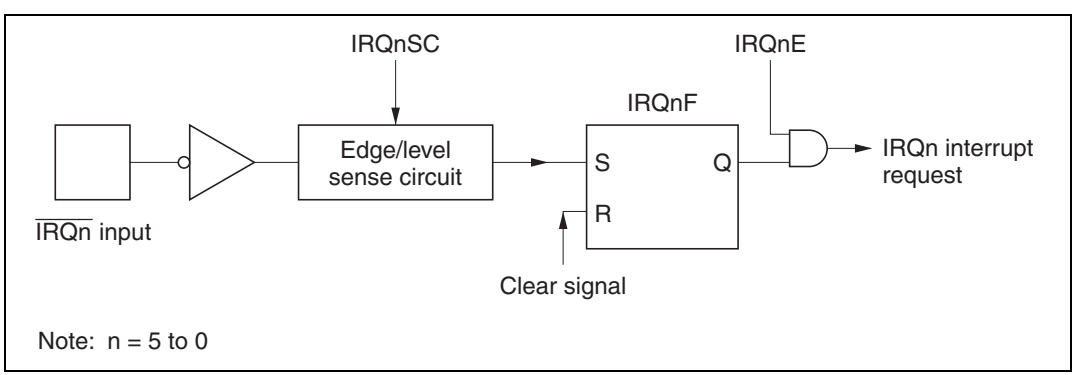

Figure 5.2 Block Diagram of Interrupts IRQ_5 to IRQ_0

Figure 5.3 shows the timing of the setting of the interrupt flags (IRQnF).

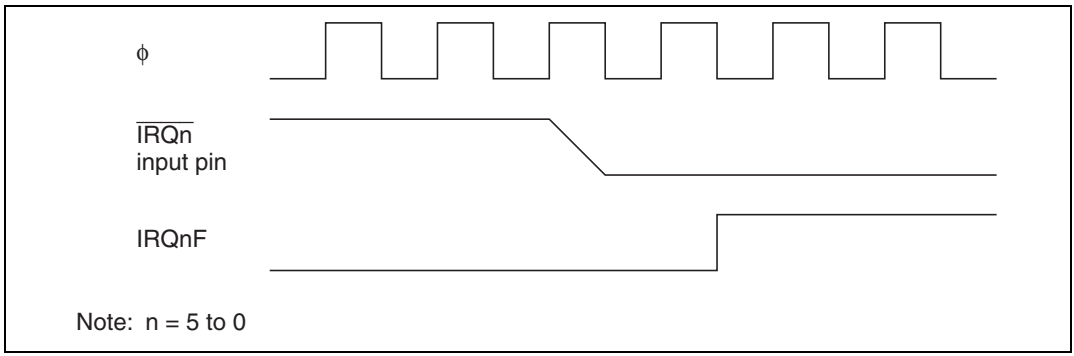

Figure 5.3 Timing of Setting of IRQnF

Interrupts IRQ_0 to IRQ_5 have vector numbers 12 to 17. These interrupts are detected regardless of whether the corresponding pin is set for input or output. When using a pin for external interrupt input, clear its DDR bit to 0 and do not use the pin for chip select output, SCI input/output, or A/D external trigger input.

5.3.2 Internal Interrupts

Twenty-Seven internal interrupts are requested from the on-chip supporting modules.

- Each on-chip supporting module has status flags for indicating interrupt status, and enable bits for enabling or disabling interrupts.
- Interrupt priority levels can be assigned in IPRA and IPRB.

5.3.3 Interrupt Exception Handling Vector Table

Table 5.3 lists the interrupt exception handling sources, their vector addresses, and their default priority order. In the default priority order, smaller vector numbers have higher priority. The priority of interrupts other than NMI can be changed in IPRA and IPRB. The priority order after a reset is the default order shown in table 5.3.

Table 5.3 Interrupt Sources, Vector Addresses, and Priority

Interrupt Source	Origin	Vector Number	Vector Address* Advanced Mode	Vector Address* Normal Mode	IPR	Priority
NMI	External pins	7	H'001C to H'001F	H'000E to H'000F	—	High
IRQ_0		12	H'0030 to H'0033	H'0018 to H'0019	IPRA7	↑
IRQ_1		13	H'0034 to H0037	H'001A to H'001B	IPRA6	
IRQ_2 IRQ_3		14 15	H'0038 to H'003B H'003C to H'003F	H'001C to H'001D H'001E to H'001F	IPRA5	
IRQ_4 IRQ_5		16 17	H'0040 to H'0043 H'0044 to H'0047	H'0020 to H'0021 H'0022 to H'0023	IPRA4	
Reserved	—	18 19	H'0048 to H'004B H'004C to H'004F	H'0024 to H'0025 H'0026 to H'0027		
WOVI (interval timer)	Watchdog timer	20	H'0050 to H'0053	H'0028 to H'0029	IPRA3	
Reserved	—	21 22	H'0054 to H'0057 H'0058 to H'005B	H'002A to H'002B H'002C to H'002D		
ADI (A/D end)	A/D	23	H'005C to H'005F	H'002E to H'002F		
IMIA0 (compare match/ input capture A0)	16-bit timer channel 0	24	H'0060 to H'0063	H'0030 to H'0031	IPRA2	
IMIB0 (compare match/ input capture B0)		25	H'0064 to H'0067	H'0032 to H'0033		
OVI0 (overflow 0)		26	H'0068 to H'006B	H'0034 to H'0035		
Reserved	—	27	H'006C to H'006F	H'0036 to H'0037		
IMIA1 (compare match/ inputcapture A1)	16-bit timer channel 1	28	H'0070 to H'0073	H'0038 to H'0039	IPRA1	
IMIB1 (compare match/ input capture B1)		29	H'0074 to H'0077	H'003A to H'003B		
OVI1 (overflow 1)		30	H'0078 to H'007B	H'003C to H'003D		
Reserved	—	31	H'007C to H'007F	H'003E to H'003F		Low

Interrupt Source	Origin	Vector Number	Vector Address* Advanced Mode	Vector Address* Normal Mode	IPR	Priority
IMIA2 (compare match/ input capture A2)	16-bit timer channel 2	32	H'0080 to H'0083	H'0040 to H'0041	IPRA0	High
IMIB2 (compare match/ input capture B2)		33	H'0084 to H'0087	H'0042 to H'0043		
OVI2 (overflow 2)		34	H'0088 to H'008B	H'0044 to H'0045		
Reserved	—	35	H'008C to H'008F	H'0046 to H'0047		
CMIA0 (compare match A0)	8-bit timer channel 0/1	36	H'0090 to H'0093	H'0048 to H'0049	IPRB7	
CMIB0 (compare match B0)		37	H'0094 to H'0097	H'004A to H'004B		
CMIA1/CMIB1 (compare match A1/B1)		38	H'0098 to H'009B	H'004C to H'004D		
TOVI0/TOVI1 (overflow 0/1)		39	H'009C to H'009F	H'004E to H'004F		
CMIA2 (compare match A2)	8-bit timer channel 2/3	40	H'00A0 to H'00A3	H'0050 to H'0051	IPRB6	
CMIB2 (compare match B2)		41	H'00A4 to H'00A7	H'0052 to H'0053		
CMIA3/CMIB3 (compare match A3/B3)		42	H'00A8 to H'00AB	H'0054 to H'0055		
TOVI2/TOVI3 (overflow 2/3)		43	H'00AC to H'00AF	H'0056 to H'0057		
Reserved	—	44	H'00B0 to H'00B3	H'0058 to H'0059	—	
		45	H'00B4 to H'00B7	H'005A to H'005B		
		46	H'00B8 to H'00BB	H'005C to H'005D		
		47	H'00BC to H'00BF	H'005E to H'005F		
		48	H'00C0 to H'00C3	H'0060 to H'0061		
		49	H'00C4 to H'00C7	H'0062 to H'0063		
		50	H'00C8 to H'00CB	H'0064 to H'0065		
		51	H'00CC to H'00CF	H'0066 to H'0067		Low

Interrupt Source	Origin	Vector Number	Vector Address* Advanced Mode	Vector Address* Normal Mode	IPR	Priority
ERI0 (receive error 0)	SCI channel 0	52	H'00D0 to H'00D3	H'0068 to H'0069	IPRB3	High
RXI0 (receive data full 0)		53	H'00D4 to H'00D7	H'006A to H'006B		
TXI0 (transmit data empty 0)		54	H'00D8 to H'00DB	H'006C to H'006D		
TEI0 (transmit end 0)		55	H'00DC to H'00DF	H'006E to H'006F		
ERI1 (receive error 1)	SCI channel 1	56	H'00E0 to H'00E3	H'0070 to H'0071	IPRB2	
RXI1 (receive data full 1)		57	H'00E4 to H'00E7	H'0072 to H'0073		
TXI1 (transmit data empty 1)		58	H'00E8 to H'00EB	H'0074 to H'0075		
TEI1 (transmit end 1)		59	H'00EC to H'00EF	H'0076 to H'0077		
Reserved	—	60	H'00F0 to H'00F3	H'0078 to H'0079	—	
		61	H'00F4 to H'00F7	H'007A to H'007B		
		62	H'00F8 to H'00FB	H'007C to H'007D		
		63	H'00FC to H'00FF	H'007E to H'007F		Low

Note: * Lower 16 bits of the address.

5.4 Interrupt Operation

5.4.1 Interrupt Handling Process

The H8/3008 handles interrupts differently depending on the setting of the UE bit. When UE = 1, interrupts are controlled by the I bit. When UE = 0, interrupts are controlled by the I and UI bits. Table 5.4 indicates how interrupts are handled for all setting combinations of the UE, I, and UI bits.

NMI interrupts are always accepted except in the reset and hardware standby states. IRQ interrupts and interrupts from the on-chip supporting modules have their own enable bits. Interrupt requests are ignored when the enable bits are cleared to 0.

Table 5.4 UE, I, and UI Bit Settings and Interrupt Handling

SYSCR	CCR		
UE	**I**	**UI**	**Description**
1	0	—	All interrupts are accepted. Interrupts with priority level 1 have higher priority.
	1	—	No interrupts are accepted except NMI.
0	0	—	All interrupts are accepted. Interrupts with priority level 1 have higher priority.
	1	0	NMI and interrupts with priority level 1 are accepted.
		1	No interrupts are accepted except NMI.

UE = 1: Interrupts IRQ_5 to IRQ_0 and interrupts from the on-chip supporting modules can all be masked by the I bit in the CPU's CCR. Interrupts are masked when the I bit is set to 1, and unmasked when the I bit is cleared to 0. Interrupts with priority level 1 have higher priority. Figure 5.4 is a flowchart showing how interrupts are accepted when UE = 1.

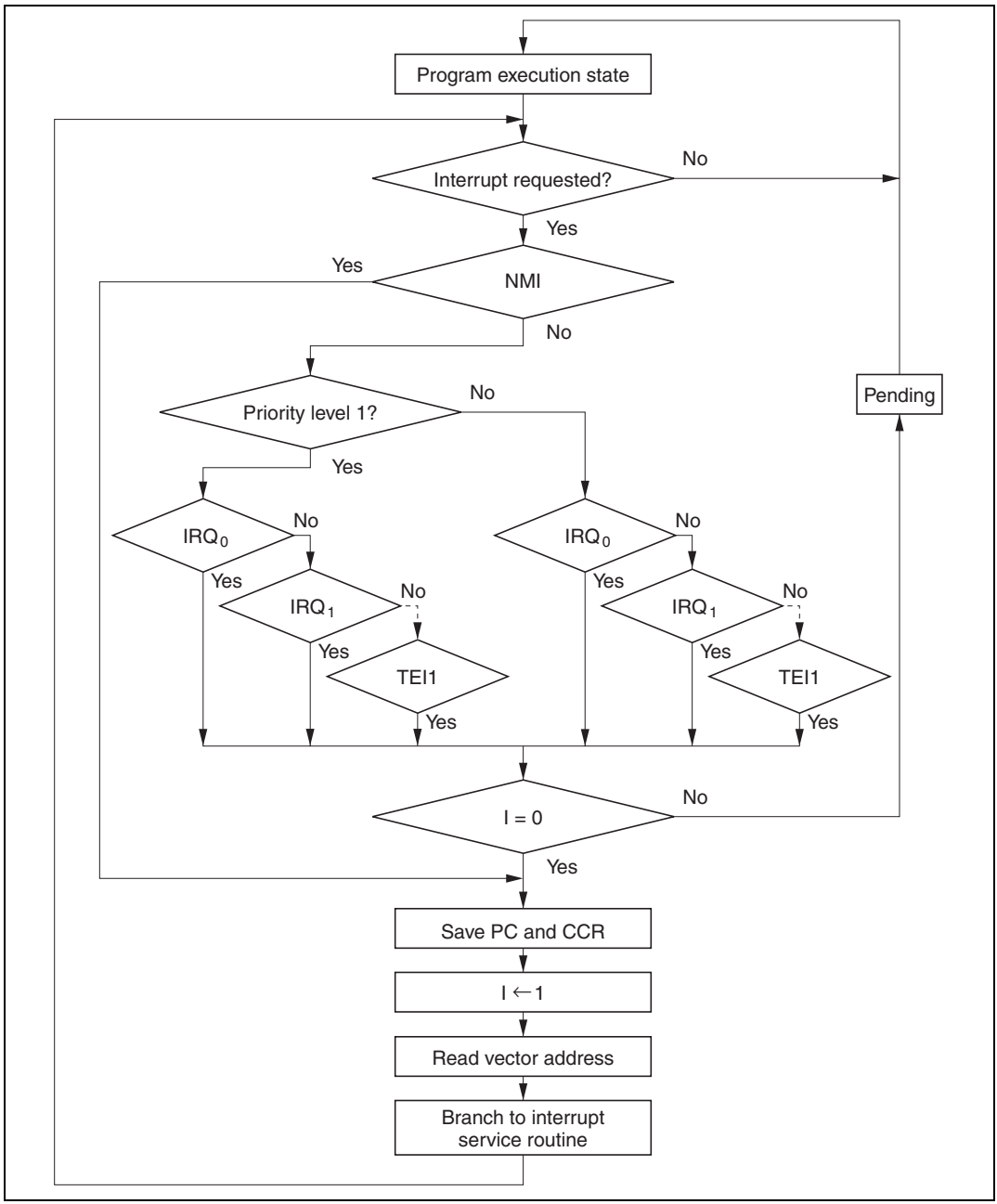

Figure 5.4 Process Up to Interrupt Acceptance when UE = 1

- If an interrupt condition occurs and the corresponding interrupt enable bit is set to 1, an interrupt request is sent to the interrupt controller.
- When the interrupt controller receives one or more interrupt requests, it selects the highest-priority request, following the IPR interrupt priority settings, and holds other requests pending. If two or more interrupts with the same IPR setting are requested simultaneously, the interrupt controller follows the priority order shown in table 5.3.
- The interrupt controller checks the I bit. If the I bit is cleared to 0, the selected interrupt request is accepted. If the I bit is set to 1, only NMI is accepted; other interrupt requests are held pending.
- When an interrupt request is accepted, interrupt exception handling starts after execution of the current instruction has been completed.
- In interrupt exception handling, PC and CCR are saved to the stack area. The PC value that is saved indicates the address of the first instruction that will be executed after the return from the interrupt service routine.
- Next the I bit is set to 1 in CCR, masking all interrupts except NMI.
- The vector address of the accepted interrupt is generated, and the interrupt service routine starts executing from the address indicated by the contents of the vector address.

UE = 0: The I and UI bits in the CPU's CCR and the IPR bits enable three-level masking of IRQ_0 to IRQ_5 interrupts and interrupts from the on-chip supporting modules.

- Interrupt requests with priority level 0 are masked when the I bit is set to 1, and are unmasked when the I bit is cleared to 0.
- Interrupt requests with priority level 1 are masked when the I and UI bits are both set to 1, and are unmasked when either the I bit or the UI bit is cleared to 0.

  For example, if the interrupt enable bits of all interrupt requests are set to 1, IPRA is set to H'20, and IPRB is set to H'00 (giving IRQ_2 and IRQ_3 interrupt requests priority over other interrupts), interrupts are masked as follows:

  a. If I = 0, all interrupts are unmasked (priority order: NMI > IRQ_2 > IRQ_3 >IRQ_0 …).
  b. If I = 1 and UI = 0, only NMI, IRQ_2, and IRQ_3 are unmasked.
  c. If I = 1 and UI = 1, all interrupts are masked except NMI.

Figure 5.5 shows the transitions among the above states.

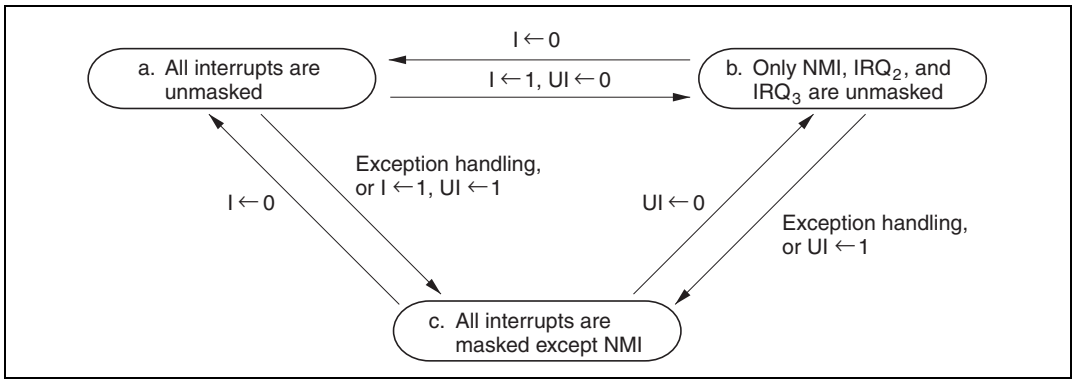

Figure 5.5 Interrupt Masking State Transitions (Example)

Figure 5.6 is a flowchart showing how interrupts are accepted when UE = 0.

- If an interrupt condition occurs and the corresponding interrupt enable bit is set to 1, an interrupt request is sent to the interrupt controller.
- When the interrupt controller receives one or more interrupt requests, it selects the highest-priority request, following the IPR interrupt priority settings, and holds other requests pending. If two or more interrupts with the same IPR setting are requested simultaneously, the interrupt controller follows the priority order shown in table 5.3.
- The interrupt controller checks the I bit. If the I bit is cleared to 0, the selected interrupt request is accepted regardless of its IPR setting, and regardless of the UI bit. If the I bit is set to 1 and the UI bit is cleared to 0, only interrupts with priority level 1 are accepted; interrupt requests with priority level 0 are held pending. If the I bit and UI bit are both set to 1, all other interrupt requests are held pending.
- When an interrupt request is accepted, interrupt exception handling starts after execution of the current instruction has been completed.
- In interrupt exception handling, PC and CCR are saved to the stack area. The PC value that is saved indicates the address of the first instruction that will be executed after the return from the interrupt service routine.
- The I and UI bits are set to 1 in CCR, masking all interrupts except NMI.
- The vector address of the accepted interrupt is generated, and the interrupt service routine starts executing from the address indicated by the contents of the vector address.

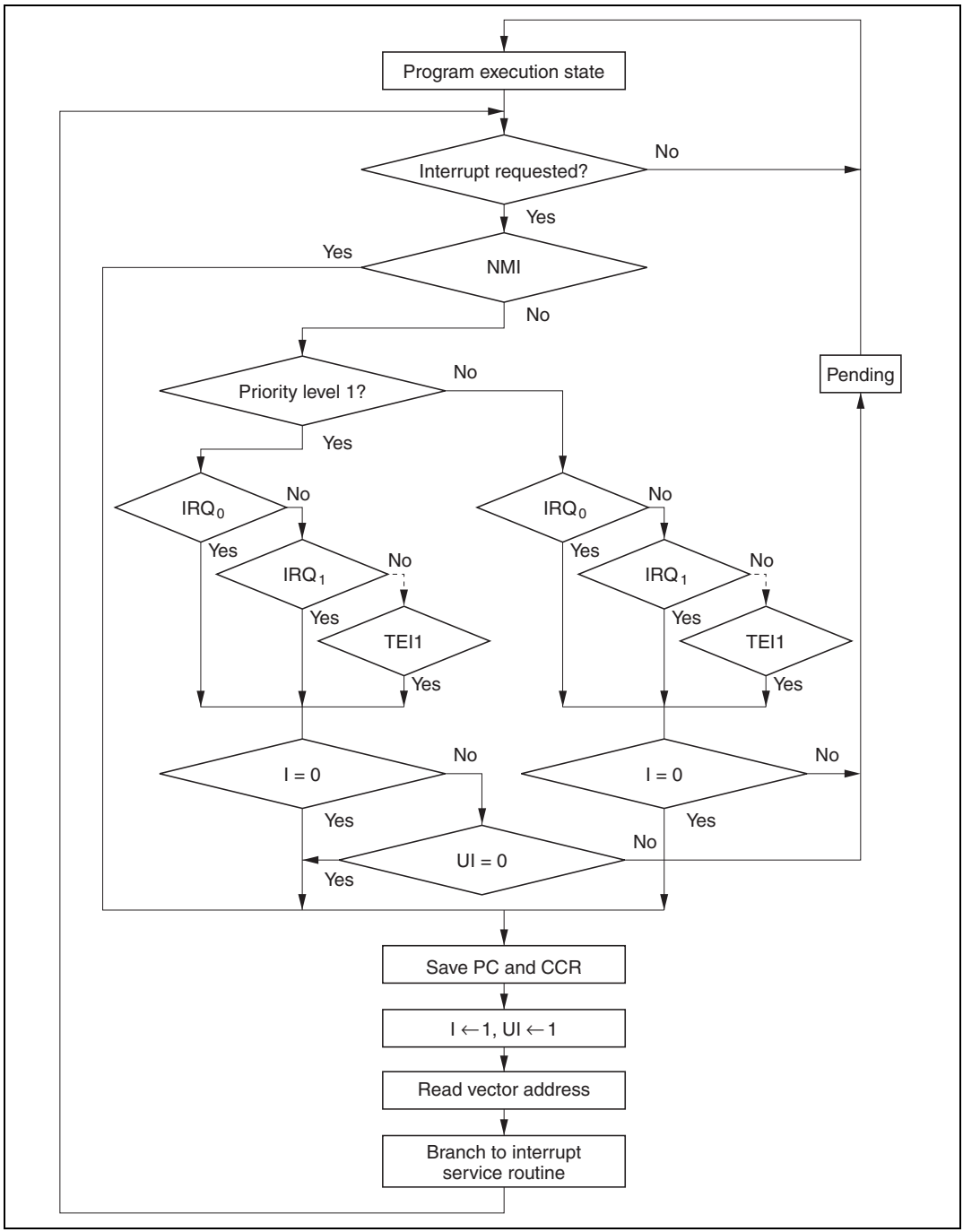

Figure 5.6 Process Up to Interrupt Acceptance when UE = 0

5.4.2 Interrupt Exception Handling Sequence

Figure 5.7 shows the interrupt exception handling sequence in mode 2 when the program code and stack are in an external memory area accessed in two states via a 16-bit bus.

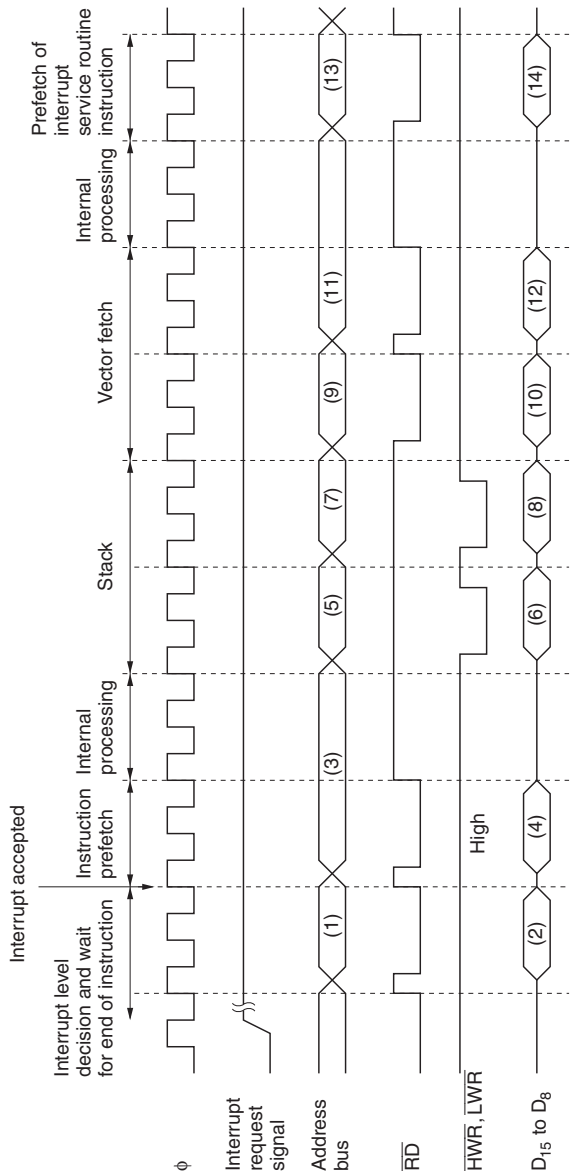

(1) Instruction prefetch address (not executed; return address, same as PC contents)
(2), (4) Instruction code (not executed)
(3) Instruction prefetch address (not executed)
(5) SP – 2
(7) SP – 4
(6), (8) PC and CCR saved to stack
(9), (11) Vector address
(10), (12) Starting address of interrupt service routine (contents of vector address)
(13) Starting address of interrupt service routine; (13) = (10), (12)
(14) First instruction of interrupt service routine

Note: Mode 2, with program code and stack in external memory area accessed in two states via 16-bit bus.

Figure 5.7 Interrupt Exception Handling Sequence

5.4.3 Interrupt Response Time

Table 5.5 indicates the interrupt response time from the occurrence of an interrupt request until the first instruction of the interrupt service routine is executed.

Table 5.5 Interrupt Response Time

No.	Item	On-Chip Memory	External Memory			
			8-Bit Bus		16-Bit Bus	
			2 States	3 States	2 States	3 States
1	Interrupt priority decision	2*[1]	2*[1]	2*[1]	2*[1]	2*[1]
2	Maximum number of states until end of current instruction	1 to 23	1 to 27	1 to 31*[4]	1 to 23	1 to 25*[4]
3	Saving PC and CCR to stack	4	8	12*[4]	4	6*[4]
4	Vector fetch	4	8	12*[4]	4	6*[4]
5	Instruction fetch*[2]	4	8	12*[4]	4	6*[4]
6	Internal processing*[3]	4	4	4	4	4
Total		19 to 41	31 to 57	43 to 73	19 to 41	25 to 49

Notes: 1. 1 state for internal interrupts.
2. Prefetch after the interrupt is accepted and prefetch of the first instruction in the interrupt service routine.
3. Internal processing after the interrupt is accepted and internal processing after vector fetch.
4. The number of states increases if wait states are inserted in external memory access.

5.5 Usage Notes

5.5.1 Contention between Interrupt and Interrupt-Disabling Instruction

When an instruction clears an interrupt enable bit to 0 to disable the interrupt, the interrupt is not disabled until after execution of the instruction is completed. If an interrupt occurs while a BCLR, MOV, or other instruction is being executed to clear its interrupt enable bit to 0, at the instant when execution of the instruction ends the interrupt is still enabled, so its interrupt exception handling is carried out. If a higher-priority interrupt is also requested, however, interrupt exception handling for the higher-priority interrupt is carried out, and the lower-priority interrupt is ignored. This also applies to the clearing of an interrupt flag to 0.

Figure 5.8 shows an example in which an IMIEA bit is cleared to 0 in the 16-bit timer's TISRA register.

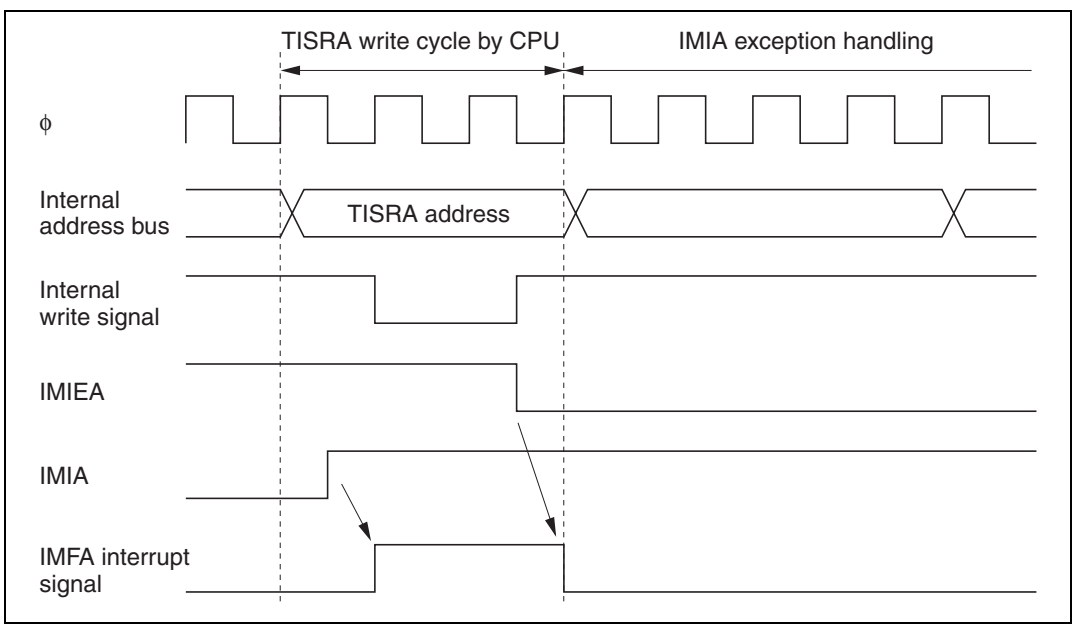

Figure 5.8 Contention between Interrupt and Interrupt-Disabling Instruction

This type of contention will not occur if the interrupt is masked when the interrupt enable bit or flag is cleared to 0.

5.5.2 Instructions that Inhibit Interrupts

The LDC, ANDC, ORC, and XORC instructions inhibit interrupts. When an interrupt occurs, after determining the interrupt priority, the interrupt controller requests a CPU interrupt. If the CPU is currently executing one of these interrupt-inhibiting instructions, however, when the instruction is completed the CPU always continues by executing the next instruction.

5.5.3 Interrupts during EEPMOV Instruction Execution

The EEPMOV.B and EEPMOV.W instructions differ in their reaction to interrupt requests.

When the EEPMOV.B instruction is executing a transfer, no interrupts are accepted until the transfer is completed, not even NMI.

When the EEPMOV.W instruction is executing a transfer, interrupt requests other than NMI are not accepted until the transfer is completed. If NMI is requested, NMI exception handling starts at a transfer cycle boundary. The PC value saved on the stack is the address of the next instruction. Programs should be coded as follows to allow for NMI interrupts during EEPMOV.W execution:

```
L1: EEPMOV.W
    MOV.W R4,R4
    BNE  L1
```

Section 6 Bus Controller

6.1 Overview

The H8/3008 has an on-chip bus controller (BSC) that manages the external address space divided into eight areas. The bus specifications, such as bus width and number of access states, can be set independently for each area, enabling multiple memories to be connected easily.

The bus controller also has a bus arbitration function that controls the operation of the internal bus masters—the CPU can release the bus to an external device.

6.1.1 Features

The features of the bus controller are listed below.

- Manages external address space in area units
  - Manages the external space as eight areas (0 to 7) of 128 kbytes in 1M-byte modes, or 2 Mbytes in 16-Mbyte modes
  - Bus specifications can be set independently for each area
- Basic bus interface
  - Chip select ($\overline{CS}_0$ to $\overline{CS}_7$) can be output for areas 0 to 7
  - 8-bit access or 16-bit access can be selected for each area
  - Two-state access or three-state access can be selected for each area
  - Program wait states can be inserted for each area
  - Pin wait insertion capability is provided
- Idle cycle insertion
  - An idle cycle can be inserted in case of an external read cycle between different areas
  - An idle cycle can be inserted when an external read cycle is immediately followed by an external write cycle
- Bus arbitration function
  - A built-in bus arbiter grants the bus right to the CPU, or an external bus master
- Other features
  - Choice of two address update modes

6.1.2 Block Diagram

Figure 6.1 shows a block diagram of the bus controller.

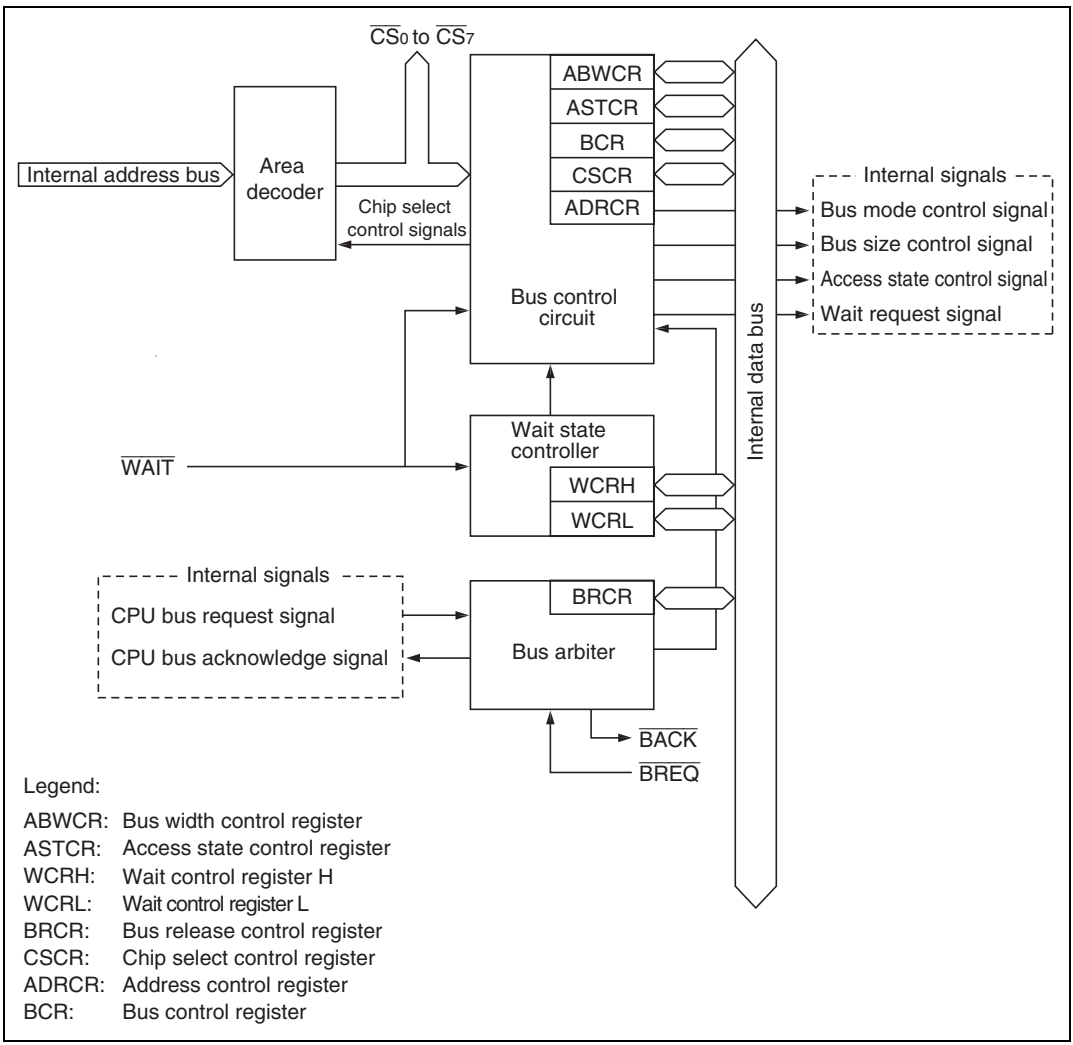

Figure 6.1 Block Diagram of Bus Controller

6.1.3 Pin Configuration

Table 6.1 summarizes the input/output pins of the bus controller.

Table 6.1 Bus Controller Pins

Name	Abbreviation	I/O	Function
Chip select 0 to 7	$\overline{CS}_0$ to $\overline{CS}_7$	Output	Strobe signals selecting areas 0 to 7
Address strobe	$\overline{AS}$	Output	Strobe signal indicating valid address output on the address bus
Read	$\overline{RD}$	Output	Strobe signal indicating reading from the external address space
High write	$\overline{HWR}$	Output	Strobe signal indicating writing to the external address space, with valid data on the upper data bus (D_{15} to D_8)
Low write	$\overline{LWR}$	Output	Strobe signal indicating writing to the external address space, with valid data on the lower data bus (D_7 to D_0)
Wait	$\overline{WAIT}$	Input	Wait request signal for access to external three-state access areas
Bus request	$\overline{BREQ}$	Input	Request signal for releasing the bus to an external device
Bus acknowledge	$\overline{BACK}$	Output	Acknowledge signal indicating release of the bus to an external device

6.1.4 Register Configuration

Table 6.2 summarizes the bus controller's registers.

Table 6.2 Bus Controller Registers

Address*[1]	Name	Abbreviation	R/W	Initial Value
H'EE020	Bus width control register	ABWCR	R/W	H'FF*[2]
H'EE021	Access state control register	ASTCR	R/W	H'FF
H'EE022	Wait control register H	WCRH	R/W	H'FF
H'EE023	Wait control register L	WCRL	R/W	H'FF
H'EE013	Bus release control register	BRCR	R/W	H'FE*[3]
H'EE01F	Chip select control register	CSCR	R/W	H'0F
H'EE01E	Address control register	ADRCR	R/W	H'FF
H'EE024	Bus control register	BCR	R/W	H'C6

Notes: 1. Lower 20 bits of the address in advanced mode.
2. In modes 2 and 4, the initial value is H'00.
3. In modes 3 and 4, the initial value is H'EE.

6.2 Register Descriptions

6.2.1 Bus Width Control Register (ABWCR)

ABWCR is an 8-bit readable/writable register that selects 8-bit or 16-bit access for each area.

Bit		7	6	5	4	3	2	1	0
		ABW7	ABW6	ABW5	ABW4	ABW3	ABW2	ABW1	ABW0
Modes 1 and 3	Initial value	1	1	1	1	1	1	1	1
	Read/Write	R/W	R/W	R/W	R/W	R/W	R/W	R/W	R/W
Modes 2 and 4	Initial value	0	0	0	0	0	0	0	0
	Read/Write	R/W	R/W	R/W	R/W	R/W	R/W	R/W	R/W

When ABWCR contains H'FF (selecting 8-bit access for all areas), the chip operates in 8-bit bus mode: the upper data bus (D_{15} to D_8) is valid, and port 4 is an input/output port. When at least one bit is cleared to 0 in ABWCR, the chip operates in 16-bit bus mode with a 16-bit data bus (D_{15} to D_0). In modes 1 and 3, ABWCR is initialized to H'FF by a reset and in hardware standby mode. In modes 2 and 4, ABWCR is initialized to H'00 by a reset and in hardware standby mode. It is not initialized in software standby mode.

Bits 7 to 0—Area 7 to 0 Bus Width Control (ABW7 to ABW0): These bits select 8-bit access or 16-bit access for the corresponding areas.

Bits 7 to 0 ABW7 to ABW0	Description
0	Areas 7 to 0 are 16-bit access areas
1	Areas 7 to 0 are 8-bit access areas

ABWCR specifies the data bus width of external memory areas. The data bus width of on-chip memory and registers is fixed, and does not depend on ABWCR settings.

6.2.2 Access State Control Register (ASTCR)

ASTCR is an 8-bit readable/writable register that selects whether each area is accessed in two states or three states.

Bit	7	6	5	4	3	2	1	0
	AST7	AST6	AST5	AST4	AST3	AST2	AST1	AST0
Initial value	1	1	1	1	1	1	1	1
Read/Write	R/W	R/W	R/W	R/W	R/W	R/W	R/W	R/W

Bits selecting number of states for access to each area

ASTCR is initialized to H'FF by a reset and in hardware standby mode. It is not initialized in software standby mode.

Bits 7 to 0—Area 7 to 0 Access State Control (AST7 to AST0): These bits select whether the corresponding area is accessed in two or three states.

Bits 7 to 0 AST7 to AST0	Description	
0	Areas 7 to 0 are accessed in two states	
1	Areas 7 to 0 are accessed in three states	(Initial value)

ASTCR specifies the number of states in which external areas are accessed. On-chip memory and registers are accessed in a fixed number of states that does not depend on ASTCR settings.

6.2.3 Wait Control Registers H and L (WCRH, WCRL)

WCRH and WCRL are 8-bit readable/writable registers that select the number of program wait states for each area.

On-chip memory and registers are accessed in a fixed number of states that does not depend on WCRH/WCRL settings.

WCRH and WCRL are initialized to H'FF by a reset and in hardware standby mode. They are not initialized in software standby mode.

WCRH

Bit	7	6	5	4	3	2	1	0
	W71	W70	W61	W60	W51	W50	W41	W40
Initial value	1	1	1	1	1	1	1	1
Read/Write	R/W	R/W	R/W	R/W	R/W	R/W	R/W	R/W

Bits 7 and 6—Area 7 Wait Control 1 and 0 (W71, W70): These bits select the number of program wait states when area 7 in external space is accessed while the AST7 bit in ASTCR is set to 1.

Bit 7 W71	Bit 6 W70	Description
0	0	Program wait not inserted when external space area 7 is accessed
	1	1 program wait state inserted when external space area 7 is accessed
1	0	2 program wait states inserted when external space area 7 is accessed
	1	3 program wait states inserted when external space area 7 is accessed (Initial value)

Bits 5 and 4—Area 6 Wait Control 1 and 0 (W61, W60): These bits select the number of program wait states when area 6 in external space is accessed while the AST6 bit in ASTCR is set to 1.

Bit 5 W61	Bit 4 W60	Description
0	0	Program wait not inserted when external space area 6 is accessed
	1	1 program wait state inserted when external space area 6 is accessed
1	0	2 program wait states inserted when external space area 6 is accessed
	1	3 program wait states inserted when external space area 6 is accessed (Initial value)

Bits 3 and 2—Area 5 Wait Control 1 and 0 (W51, W50): These bits select the number of program wait states when area 5 in external space is accessed while the AST5 bit in ASTCR is set to 1.

Bit 3 W51	Bit 2 W50	Description
0	0	Program wait not inserted when external space area 5 is accessed
	1	1 program wait state inserted when external space area 5 is accessed
1	0	2 program wait states inserted when external space area 5 is accessed
	1	3 program wait states inserted when external space area 5 is accessed (Initial value)

Bits 1 and 0—Area 4 Wait Control 1 and 0 (W41, W40): These bits select the number of program wait states when area 4 in external space is accessed while the AST4 bit in ASTCR is set to 1.

Bit 1 W41	Bit 0 W40	Description
0	0	Program wait not inserted when external space area 4 is accessed
	1	1 program wait state inserted when external space area 4 is accessed
1	0	2 program wait states inserted when external space area 4 is accessed
	1	3 program wait states inserted when external space area 4 is accessed (Initial value)

WCRL

Bit	7	6	5	4	3	2	1	0
	W31	W30	W21	W20	W11	W10	W01	W00
Initial value	1	1	1	1	1	1	1	1
Read/Write	R/W	R/W	R/W	R/W	R/W	R/W	R/W	R/W

Bits 7 and 6—Area 3 Wait Control 1 and 0 (W31, W30): These bits select the number of program wait states when area 3 in external space is accessed while the AST3 bit in ASTCR is set to 1.

Bit 7 W31	Bit 6 W30	Description
0	0	Program wait not inserted when external space area 3 is accessed
	1	1 program wait state inserted when external space area 3 is accessed
1	0	2 program wait states inserted when external space area 3 is accessed
	1	3 program wait states inserted when external space area 3 is accessed (Initial value)

Bits 5 and 4—Area 2 Wait Control 1 and 0 (W21, W20): These bits select the number of program wait states when area 2 in external space is accessed while the AST2 bit in ASTCR is set to 1.

Bit 5 W21	Bit 4 W20	Description
0	0	Program wait not inserted when external space area 2 is accessed
	1	1 program wait state inserted when external space area 2 is accessed
1	0	2 program wait states inserted when external space area 2 is accessed
	1	3 program wait states inserted when external space area 2 is accessed (Initial value)

Bits 3 and 2—Area 1 Wait Control 1 and 0 (W11, W10): These bits select the number of program wait states when area 1 in external space is accessed while the AST1 bit in ASTCR is set to 1.

Bit 3 W11	Bit 2 W10	Description
0	0	Program wait not inserted when external space area 1 is accessed
	1	1 program wait state inserted when external space area 1 is accessed
1	0	2 program wait states inserted when external space area 1 is accessed
	1	3 program wait states inserted when external space area 1 is accessed (Initial value)

Bits 1 and 0—Area 0 Wait Control 1 and 0 (W01, W00): These bits select the number of program wait states when area 0 in external space is accessed while the AST0 bit in ASTCR is set to 1.

Bit 1 W01	Bit 0 W00	Description
0	0	Program wait not inserted when external space area 0 is accessed
	1	1 program wait state inserted when external space area 0 is accessed
1	0	2 program wait states inserted when external space area 0 is accessed
	1	3 program wait states inserted when external space area 0 is accessed (Initial value)

6.2.4 Bus Release Control Register (BRCR)

BRCR is an 8-bit readable/writable register that enables address output on bus lines A_{23} to A_{20} and enables or disables release of the bus to an external device.

Bit		7	6	5	4	3	2	1	0
		A23E	A22E	A21E	A20E	—	—	—	BRLE
Modes 1 and 2	Initial value	1	1	1	1	1	1	1	0
	Read/Write	—	—	—	—	—	—	—	R/W
Modes 3 and 4	Initial value	1	1	1	0	1	1	1	0
	Read/Write	R/W	R/W	R/W	—	—	—	—	R/W

Reserved bits

Address 23 to 20 enable
These bits enable PA_7 to PA_4 to be used for A_{23} to A_{20} address output

Bus release enable
Enables or disables release of the bus to an external device

BRCR is initialized to H'FE in modes 1 and 2, and to H'EE in modes 3 and 4, by a reset and in hardware standby mode. It is not initialized in software standby mode.

Bit 7—Address 23 Enable (A23E): Enables PA_4 to be used as the A_{23} address output pin. Writing 0 in this bit enables A_{23} output from PA_4. In modes other than 3 and 4, this bit cannot be modified and PA_4 has its ordinary port functions.

Bit 7 A23E	Description	
0	PA_4 is the A_{23} address output pin	
1	PA_4 is an input/output pin	(Initial value)

Bit 6—Address 22 Enable (A22E): Enables PA_5 to be used as the A_{22} address output pin. Writing 0 in this bit enables A_{22} output from PA_5. In modes other than 3 and 4, this bit cannot be modified and PA_5 has its ordinary port functions.

Bit 6 A22E	Description	
0	PA_5 is the A_{22} address output pin	
1	PA_5 is an input/output pin	(Initial value)

Bit 5—Address 21 Enable (A21E): Enables PA_6 to be used as the A_{21} address output pin. Writing 0 in this bit enables A_{21} output from PA_6. In modes other than 3 and 4, this bit cannot be modified and PA_6 has its ordinary port functions.

Bit 5 A21E	Description	
0	PA_6 is the A_{21} address output pin	
1	PA_6 is an input/output pin	(Initial value)

Bit 4—Address 20 Enable (A20E): Enables PA_7 to be used as an address output pin. When 0 is written to this bit, PA_7 functions as address output A_{20}. In modes 3 and 4, PA_7 functions as an address output pin, and in modes 1 and 2, as a normal port pin.

Bit 4 A20E	Description
0	PA_7 is the A_{20} address output pin (In mode 3 or 4)
1	PA_7 is an input/output pin (In mode 1 or 2)

Bits 3 to 1—Reserved: These bits cannot be modified and are always read as 1.

Bit 0—Bus Release Enable (BRLE): Enables or disables release of the bus to an external device.

Bit 0 BRLE	Description	
0	The bus cannot be released to an external device $\overline{BREQ}$ and $\overline{BACK}$ can be used as input/output pins	(Initial value)
1	The bus can be released to an external device	

6.2.5 Bus Control Register (BCR)

Bit	7	6	5	4	3	2	1	0
	ICIS1	ICIS0	—	—	—	—	RDEA	WAITE
Initial value	1	1	0*1	0*1	0*1	1*2	1	0
Read/Write	R/W	R/W	—	—	—	—	R/W	R/W

Notes: 1. 1 must not be written in bits 5 to 3.
2. 0 must not be written in bit 2.

BCR is an 8-bit readable/writable register that enables or disables idle cycle insertion, selects the area division unit, selects the extended memory map, and enables or disables $\overline{\text{WAIT}}$ pin input.

BCR is initialized to H'C6 by a reset and in hardware standby mode. It is not initialized in software standby mode.

Bit 7—Idle Cycle Insertion 1 (ICIS1): Selects whether one idle cycle state is to be inserted between bus cycles in case of consecutive external read cycles for different areas.

Bit 7 ICIS1	Description
0	No idle cycle inserted in case of consecutive external read cycles for different areas
1	Idle cycle inserted in case of consecutive external read cycles for different areas (Initial value)

Bit 6—Idle Cycle Insertion 0 (ICIS0): Selects whether one idle cycle state is to be inserted between bus cycles in case of consecutive external read and write cycles.

Bit 6 ICIS0	Description
0	No idle cycle inserted in case of consecutive external read and write cycles
1	Idle cycle inserted in case of consecutive external read and write cycles (Initial value)

Bits 5 to 3—Reserved (must not be set to 1): These bits can be read and written, but must not be set to 1. Normal operation cannot be guaranteed if 1 is written in these bits.

Bit 2— Reserved (must not be set to 0): This bit can be read and written, but must not be set to 0. Normal operation cannot be guaranteed if 0 is written in this bit.

Bit 1—Area Division Unit Select (RDEA): Selects the memory map area division units. This bit is valid in modes 3 and 4, and is invalid in modes 1 and 2.

Bit 1 RDEA	Description		
0	Area divisions are as follows:	Area 0: 2 Mbytes	Area 4: 1.93 Mbytes
		Area 1: 2 Mbytes	Area 5: 4 kbytes
		Area 2: 8 Mbytes	Area 6: 23.75 kbytes
		Area 3: 2 Mbytes	Area 7: 22 bytes
1	Areas 0 to 7 are the same size (2 Mbytes)		(Initial value)

Bit 0—WAIT Pin Enable (WAITE): Enables or disables wait insertion by means of the $\overline{\text{WAIT}}$ pin.

Bit 0 WAITE	Description
0	$\overline{\text{WAIT}}$ pin wait input is disabled, and the $\overline{\text{WAIT}}$ pin can be used as an input/output port (Initial value)
1	$\overline{\text{WAIT}}$ pin wait input is enabled

6.2.6 Chip Select Control Register (CSCR)

CSCR is an 8-bit readable/writable register that enables or disables output of chip select signals ($\overline{CS}_7$ to $\overline{CS}_4$).

If output of a chip select signal $\overline{CS}_7$ to $\overline{CS}_4$ is enabled by a setting in this register, the corresponding pin functions a chip select signal ($\overline{CS}_7$ to $\overline{CS}_4$) output regardless of any other settings.

Bit	7	6	5	4	3	2	1	0
	CS7E	CS6E	CS5E	CS4E	—	—	—	—
Initial value	0	0	0	0	1	1	1	1
Read/Write	R/W	R/W	R/W	R/W	—	—	—	—

Chip select 7 to 4 enable
These bits enable or disable chip select signal output

Reserved bits

CSCR is initialized to H'0F by a reset and in hardware standby mode. It is not initialized in software standby mode.

Bits 7 to 4—Chip Select 7 to 4 Enable (CS7E to CS4E): These bits enable or disable output of the corresponding chip select signal.

Bit n CSnE	Description	
0	Output of chip select signal $\overline{CSn}$ is disabled	(Initial value)
1	Output of chip select signal $\overline{CSn}$ is enabled	

Note: n = 7 to 4

Bits 3 to 0—Reserved: These bits cannot be modified and are always read as 1.

6.2.7 Address Control Register (ADRCR)

ADRCR is an 8-bit readable/writable register that selects either address update mode 1 or address update mode 2 as the address output method.

Bit	7	6	5	4	3	2	1	0
	—	—	—	—	—	—	—	ADRCTL
Initial value	1	1	1	1	1	1	1	1
Read/Write	—	—	—	—	—	—	—	R/W

Reserved bits

Address control
Selects address update mode 1 or address update mode 2

ADRCR is initialized to H'FF by a reset and in hardware standby mode. It is not initialized in software standby mode.

Bits 7 to 1—Reserved: Read-only bits, always read as 1.

Bit 0—Address Control (ADRCTL): Selects the address output method.

Bit 0 ADRCTL	Description	
0	Address update mode 2 is selected	
1	Address update mode 1 is selected	(Initial value)

6.3 Operation

6.3.1 Area Division

The external address space is divided into areas 0 to 7. Each area has a size of 128 kbytes in the 1-Mbyte modes, or 2 Mbytes in the 16-Mbyte modes. Figure 6.2 shows a general view of the memory map.

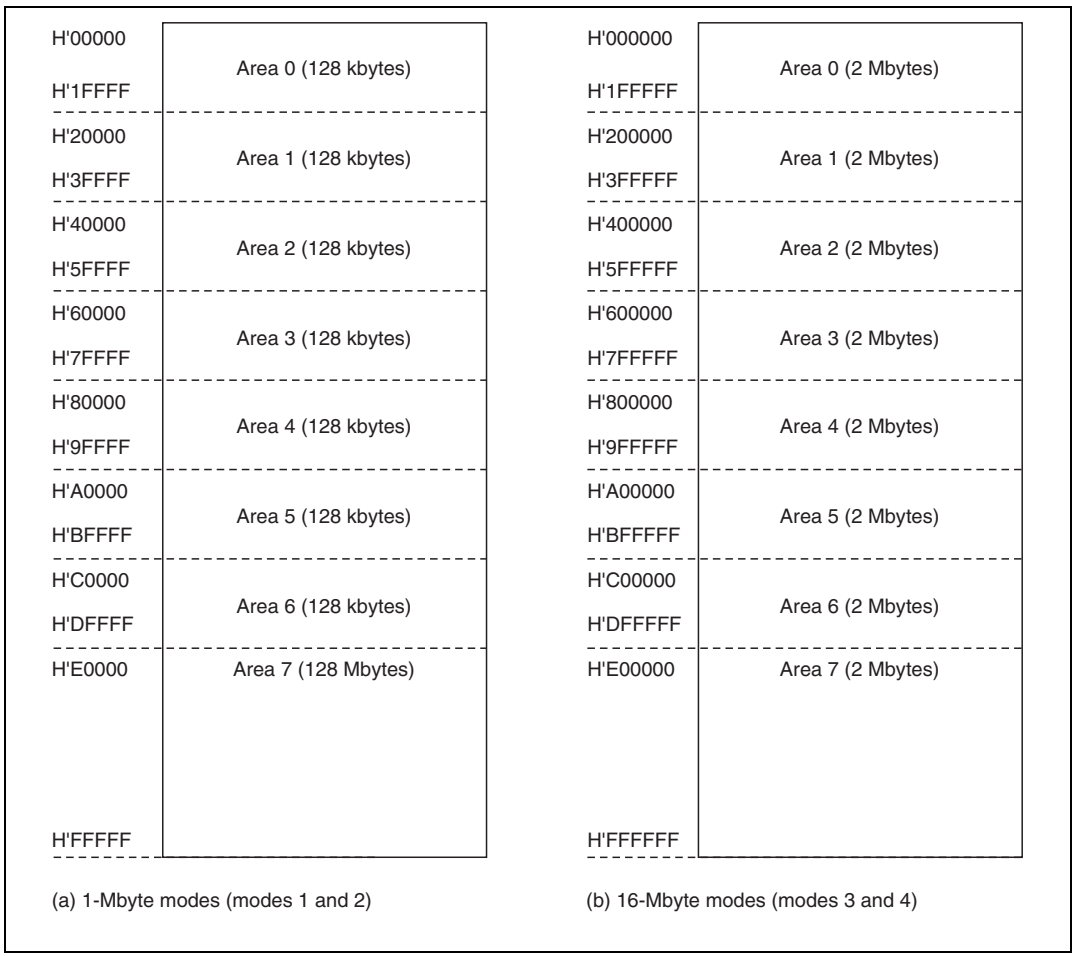

Figure 6.2 Access Area Map for Each Operating Mode

Chip select signals ($\overline{CS_0}$ to $\overline{CS_7}$) can be output for areas 0 to 7. The bus specifications for each area are selected in ABWCR, ASTCR, WCRH, and WCRL.

In 16-Mbyte mode, the area division units can be selected with the RDEA bit in BCR.

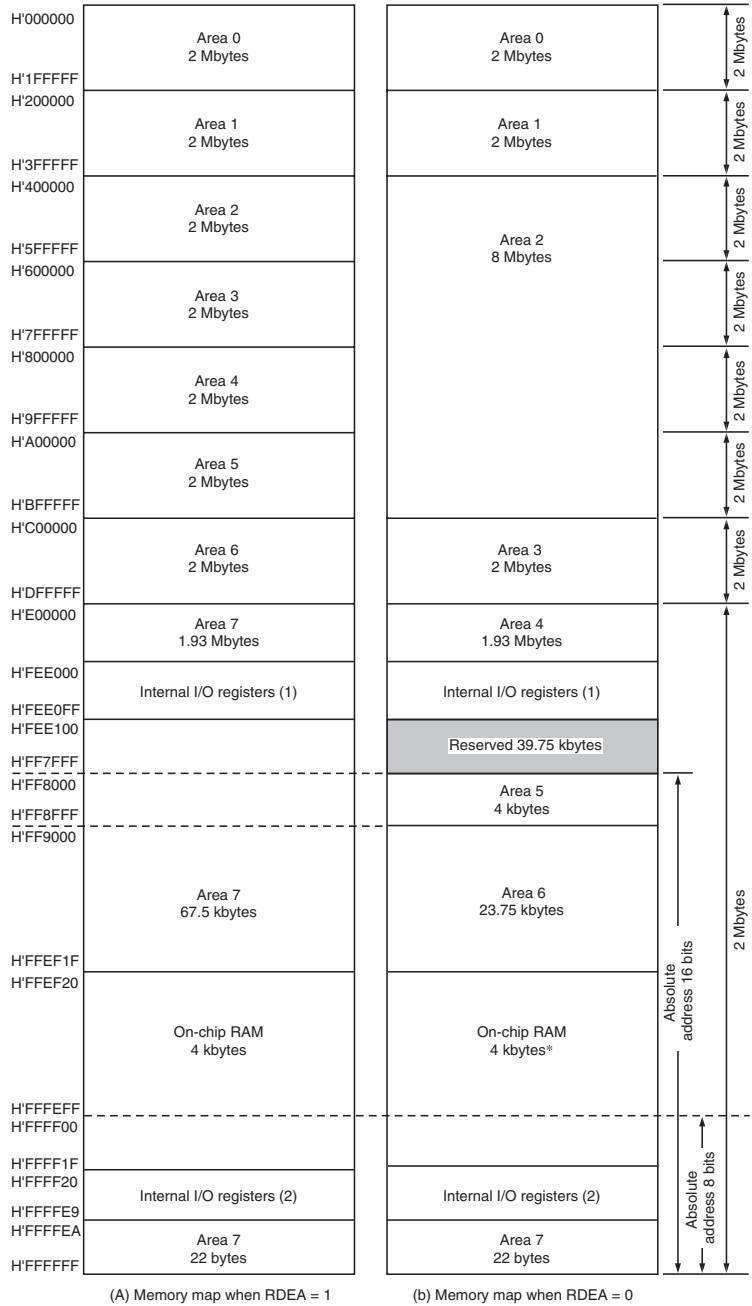

Note: * Area 6 when the RAME bit is cleared.

Figure 6.3 Memory Map in 16-Mbyte Mode

6.3.2 Bus Specifications

The external space bus specifications consist of three elements: bus width, number of access states, and number of program wait states.

The bus width and number of access states for on-chip memory and internal I/O registers are fixed, and are not affected by the bus controller.

Bus Width: A bus width of 8 or 16 bits can be selected with ABWCR. An area for which an 8-bit bus is selected functions as an 8-bit access space, and an area for which a 16-bit bus is selected functions as a16-bit access space.

If all areas are designated for 8-bit access, 8-bit bus mode is set; if any area is designated for 16-bit access, 16-bit bus mode is set.

Number of Access States: Two or three access states can be selected with ASTCR. An area for which two-state access is selected functions as a two-state access space, and an area for which three-state access is selected functions as a three-state access space.

When two-state access space is designated, wait insertion is disabled.

Number of Program Wait States: When three-state access space is designated in ASTCR, the number of program wait states to be inserted automatically is selected with WCRH and WCRL. From 0 to 3 program wait states can be selected.

Table 6.3 shows the bus specifications for each basic bus interface area.

Table 6.3 Bus Specifications for Each Area (Basic Bus Interface)

ABWCR	ASTCR	WCRH/WCRL		Bus Specifications (Basic Bus Interface)		
ABWn	**ASTn**	**Wn1**	**Wn0**	**Bus Width**	**Access States**	**Program Wait States**
0	0	—	—	16	2	0
	1	0	0		3	0
			1			1
		1	0			2
			1			3
1	0	—	—	8	2	0
	1	0	0		3	0
			1			1
		1	0			2
			1			3

Note: n = 0 to 7

6.3.3 Memory Interfaces

As its memory interface, the H8/3008 has only a basic bus interface that allows direct connection of ROM, SRAM, and so on. It is not possible to select a DRAM interface that allows direct connection of DRAM, or a burst ROM interface that allows direct connection of burst ROM.

6.3.4 Chip Select Signals

For each of areas 0 to 7, the H8/3008 can output a chip select signal ($\overline{CS}_0$ to $\overline{CS}_7$) that goes low when the corresponding area is selected in expanded mode. Figure 6.4 shows the output timing of a $\overline{CS}$n signal.

Output of $\overline{CS}_0$ to $\overline{CS}_3$: Output of $\overline{CS}_0$ to $\overline{CS}_3$ is enabled or disabled in the data direction register (DDR) of the corresponding port.

In the expanded modes with on-chip ROM disabled, a reset leaves pin $\overline{CS}_0$ in the output state and pins $\overline{CS}_1$ to $\overline{CS}_3$ in the input state. To output chip select signals $\overline{CS}_1$ to $\overline{CS}_3$, the corresponding DDR bits must be set to 1. In the expanded modes with on-chip ROM enabled, a reset leaves pins $\overline{CS}_0$ to $\overline{CS}_3$ in the input state. To output chip select signals $\overline{CS}_0$ to $\overline{CS}_3$, the corresponding DDR bits must be set to 1. For details, see section 7, I/O Ports.

Output of $\overline{CS}_4$ to $\overline{CS}_7$: Output of $\overline{CS}_4$ to $\overline{CS}_7$ is enabled or disabled in the chip select control register (CSCR). A reset leaves pins $\overline{CS}_4$ to $\overline{CS}_7$ in the input state. To output chip select signals $\overline{CS}_4$ to $\overline{CS}_7$, the corresponding CSCR bits must be set to 1. For details, see section 7, I/O Ports.

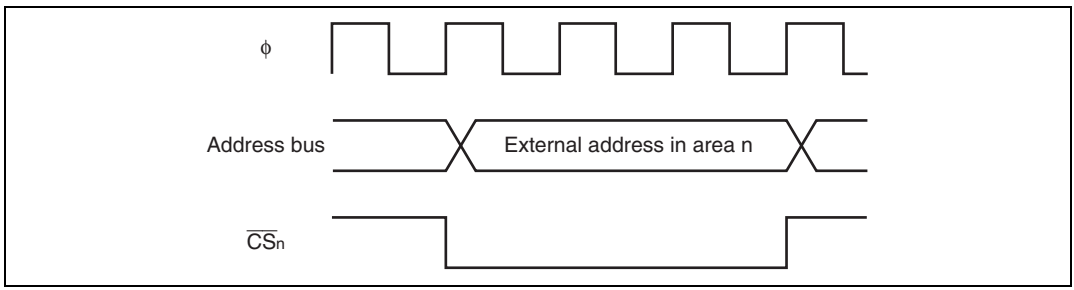

Figure 6.4 $\overline{CS}$n Signal Output Timing (n = 0 to 7)

When the on-chip ROM, on-chip RAM, and internal I/O registers are accessed, $\overline{CS}_0$ to $\overline{CS}_7$ remain high. The $\overline{CS}_n$ signals are decoded from the address signals. They can be used as chip select signals for SRAM and other devices.

6.3.5 Address Output Method

The H8/3008 provides a choice of two address update methods: either the same method as in the previous H8/300H Series (address update mode 1), or a method in which address updating is restricted to external space accesses (address update mode 2).

Figure 6.5 shows examples of address output in these two update modes.

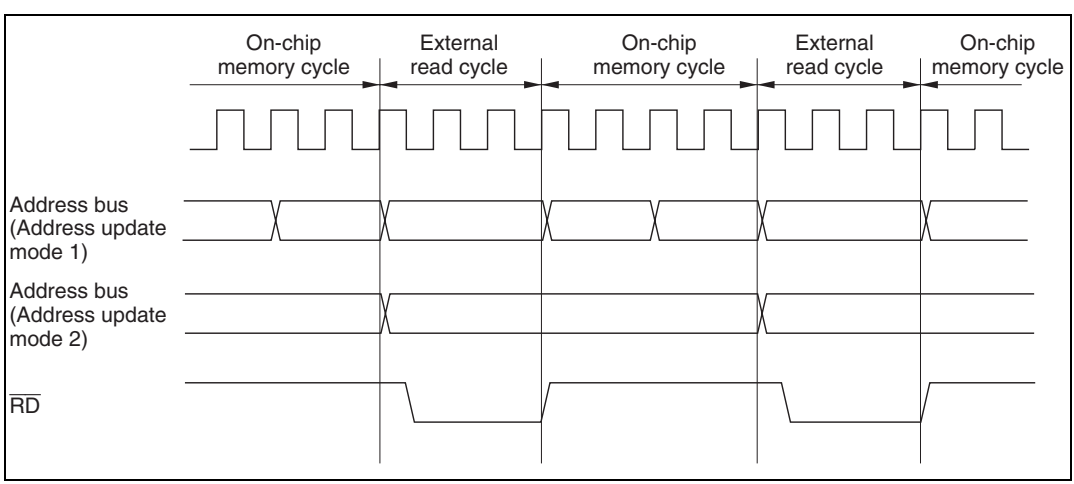

Figure 6.5 Sample Address Output in Each Address Update Mode (Basic Bus Interface, 3-State Space)

Address Update Mode 1: Address update mode 1 is compatible with the previous H8/300H Series. Addresses are always updated between bus cycles.

Address Update Mode 2: In address update mode 2, address updating is performed only in external space accesses. In this mode, the address can be retained between an external space read cycle and an instruction fetch cycle (on-chip memory) by placing the program in on-chip memory. Address update mode 2 is therefore useful when connecting a device that requires address hold time with respect to the rise of the $\overline{\text{RD}}$ strobe.

Switching between address update modes 1 and 2 is performed by means of the ADRCTL bit in ADRCR. The initial value of ADRCR is the address update mode 1 setting, providing compatibility with the previous H8/300H Series.

Cautions: The address output methods are designed so that the initial state with the bit selection method is compatible with the H8/3062F-ZTAT (HD64F3062) (i.e. address update mode 1). However, the following points should be noted.

- ADRCR is allocated to address H'FEE01E. In the H8/3062F-ZTAT, the corresponding address is empty space, but it is necessary to confirm that no accesses are made to H'FEE01E in the program.
- When address update mode 2 is selected, the address in an internal space (on-chip memory or internal I/O) access cycle is not output externally.
- In order to secure address holding with respect to the rise of $\overline{\text{RD}}$, when address update mode 2 is used an external space read access must be completed within a single access cycle. For example, in a word access to 8-bit access space, the bus cycle is split into two as shown in figure 6.6, and so there is not a single access cycle. In this case, address holding is not guaranteed at the rise of $\overline{\text{RD}}$ between the first (even address) and second (odd address) access cycles (area inside the ellipse in the figure).

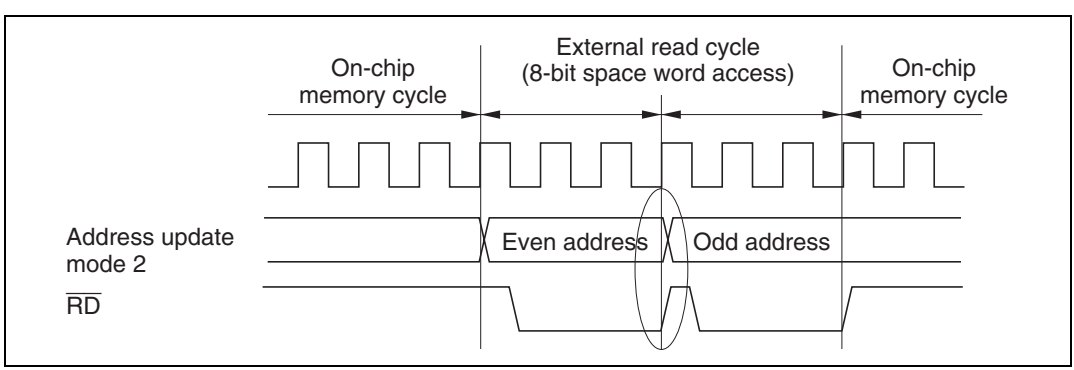

Figure 6.6 Example of Consecutive External Space Accesses in Address Update Mode 2

6.4 Basic Bus Interface

6.4.1 Overview

The basic bus interface enables direct connection of ROM, SRAM, and so on.

The bus specifications can be selected with ABWCR, ASTCR, WCRH, and WCRL (see table 6.3).

6.4.2 Data Size and Data Alignment

Data sizes for the CPU and other internal bus masters are byte, word, and longword. The bus controller has a data alignment function, and when accessing external space, controls whether the upper data bus (D_{15} to D_8) or lower data bus (D_7 to D_0) is used according to the bus specifications for the area being accessed (8-bit access area or 16-bit access area) and the data size.

8-Bit Access Areas: Figure 6.7 illustrates data alignment control for 8-bit access space. With 8-bit access space, the upper data bus (D_{15} to D_8) is always used for accesses. The amount of data that can be accessed at one time is one byte: a word access is performed as two byte accesses, and a longword access, as four byte accesses.

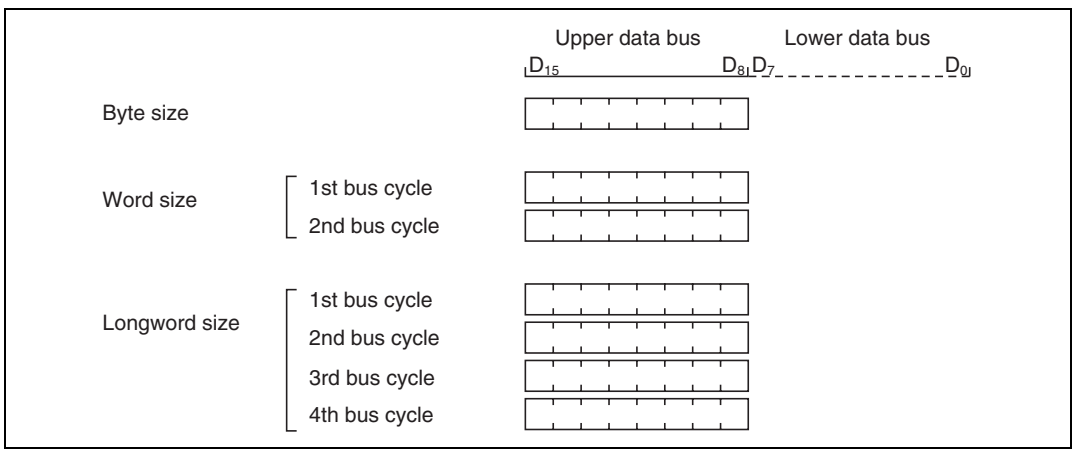

Figure 6.7 Access Sizes and Data Alignment Control (8-Bit Access Area)

16-Bit Access Areas: Figure 6.8 illustrates data alignment control for 16-bit access areas. With 16-bit access areas, the upper data bus (D_{15} to D_8) and lower data bus (D_7 to D_0) are used for accesses. The amount of data that can be accessed at one time is one byte or one word, and a longword access is executed as two word accesses.

In byte access, whether the upper or lower data bus is used is determined by whether the address is even or odd. The upper data bus is used for an even address, and the lower data bus for an odd address.

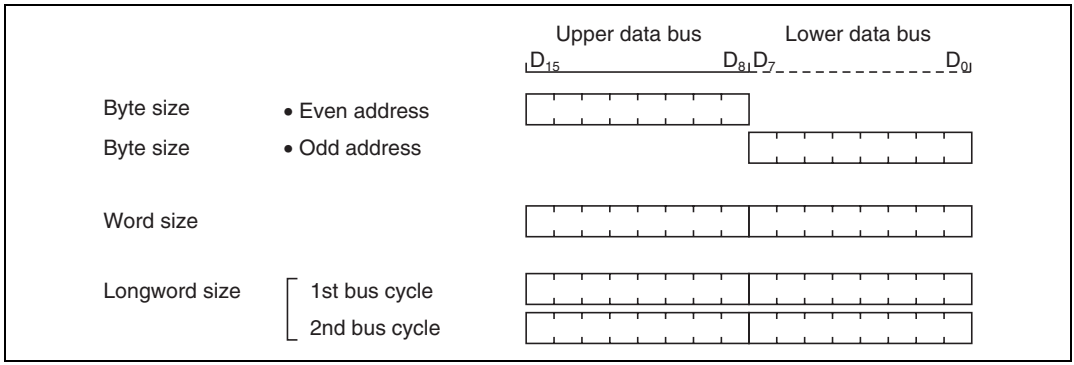

Figure 6.8 Access Sizes and Data Alignment Control (16-Bit Access Area)

6.4.3 Valid Strobes

Table 6.4 shows the data buses used, and the valid strobes, for the access spaces.

In a read, the $\overline{\text{RD}}$ signal is valid for both the upper and the lower half of the data bus.

In a write, the $\overline{\text{HWR}}$ signal is valid for the upper half of the data bus, and the $\overline{\text{LWR}}$ signal for the lower half.

Table 6.4 Data Buses Used and Valid Strobes

Area	Access Size	Read/ Write	Address	Valid Strobe	Upper Data Bus (D_{15} to D_8)	Lower Data Bus (D_7 to D_0)
8-bit access area	Byte	Read	—	$\overline{RD}$	Valid	Invalid
		Write	—	$\overline{HWR}$		Undetermined data
16-bit access area	Byte	Read	Even	$\overline{RD}$	Valid	Invalid
			Odd		Invalid	Valid
		Write	Even	$\overline{HWR}$	Valid	Undetermined data
			Odd	$\overline{LWR}$	Undetermined data	Valid
	Word	Read	—	$\overline{RD}$	Valid	Valid
		Write	—	$\overline{HWR}$, $\overline{LWR}$	Valid	Valid

Notes: 1. Undetermined data means that unpredictable data is output.
2. Invalid means that the bus is in the input state and the input is ignored.

6.4.4 Memory Areas

The initial state of each area is basic bus interface, three-state access space. The initial bus width is selected according to the operating mode.

Areas 0 to 6: In the H8/3008, the entire space of areas 0 to 6 is external space.
When area 0 to 6 external space is accessed, the $\overline{CS_0}$ to $\overline{CS_6}$ pin signals respectively can be output.
The size of areas 0 to 6 is 128 kbytes in modes 1 and 2, and 2 Mbytes in modes 3 and 4.

Area 7: Area 7 includes the on-chip RAM and internal I/O registers. In the H8/3008, the space excluding the on-chip RAM and I/O registers is external space. The on-chip RAM is enabled when the RAME bit in the system control register (SYSCR) is set to 1; when the RAME bit is cleared to 0, the on-chip RAM is disabled and the corresponding space becomes external space .
When area 7 external space is accessed, the $\overline{CS_7}$ signal can be output.
The size of area 7 is 128 kbytes in modes 1 and 2, and 2 Mbytes in modes 3 and 4.

6.4.5 Basic Bus Control Signal Timing

8-Bit, Three-State-Access Areas: Figure 6.9 shows the timing of bus control signals for an 8-bit, three-state-access area. The upper data bus (D_{15} to D_8) is used in accesses to these areas. The $\overline{LWR}$ pin is always high. Wait states can be inserted.

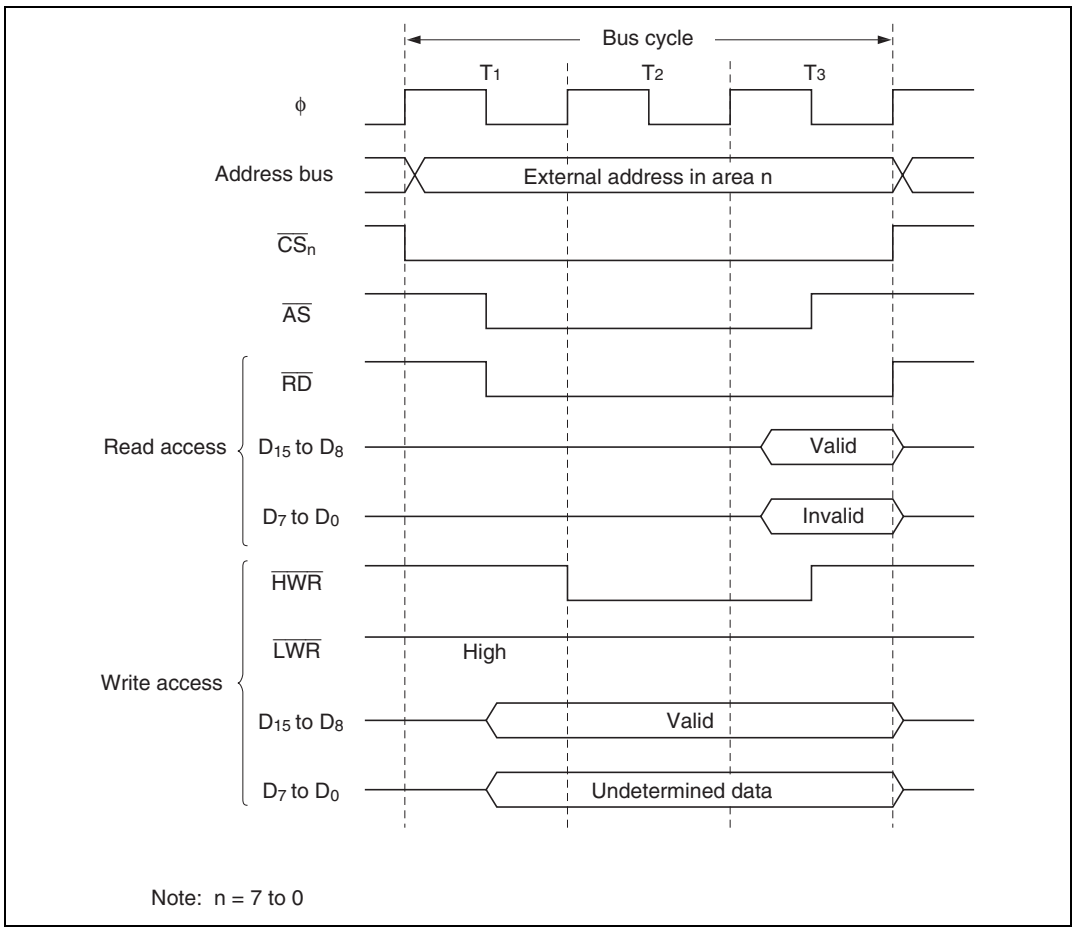

Figure 6.9 Bus Control Signal Timing for 8-Bit, Three-State-Access Area

8-Bit, Two-State-Access Areas: Figure 6.10 shows the timing of bus control signals for an 8-bit, two-state-access area. The upper data bus (D_{15} to D_8) is used in accesses to these areas. The $\overline{LWR}$ pin is always high. Wait states cannot be inserted.

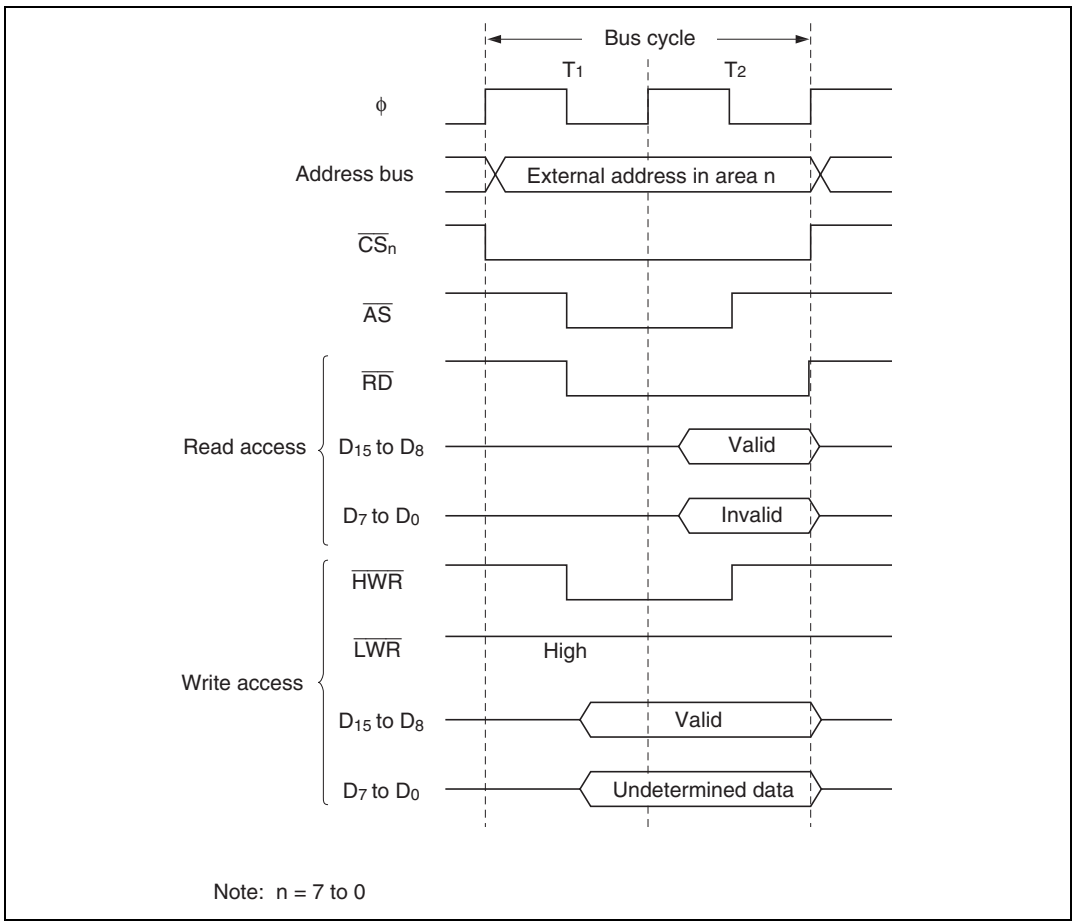

Figure 6.10 Bus Control Signal Timing for 8-Bit, Two-State-Access Area

16-Bit, Three-State-Access Areas: Figures 6.11 to 6.13 show the timing of bus control signals for a 16-bit, three-state-access area. In these areas, the upper data bus (D_{15} to D_8) is used in accesses to even addresses and the lower data bus (D_7 to D_0) in accesses to odd addresses. Wait states can be inserted.

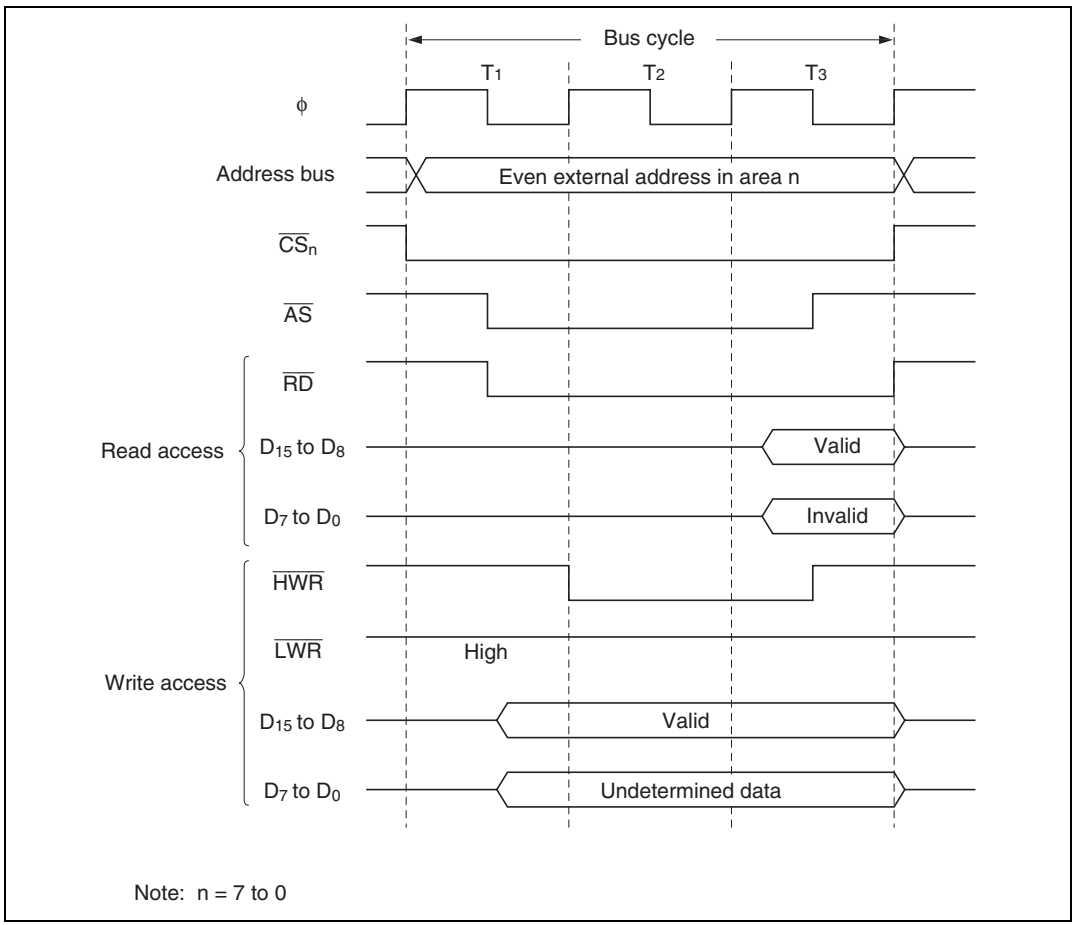

Figure 6.11 Bus Control Signal Timing for 16-Bit, Three-State-Access Area (1) (Byte Access to Even Address)

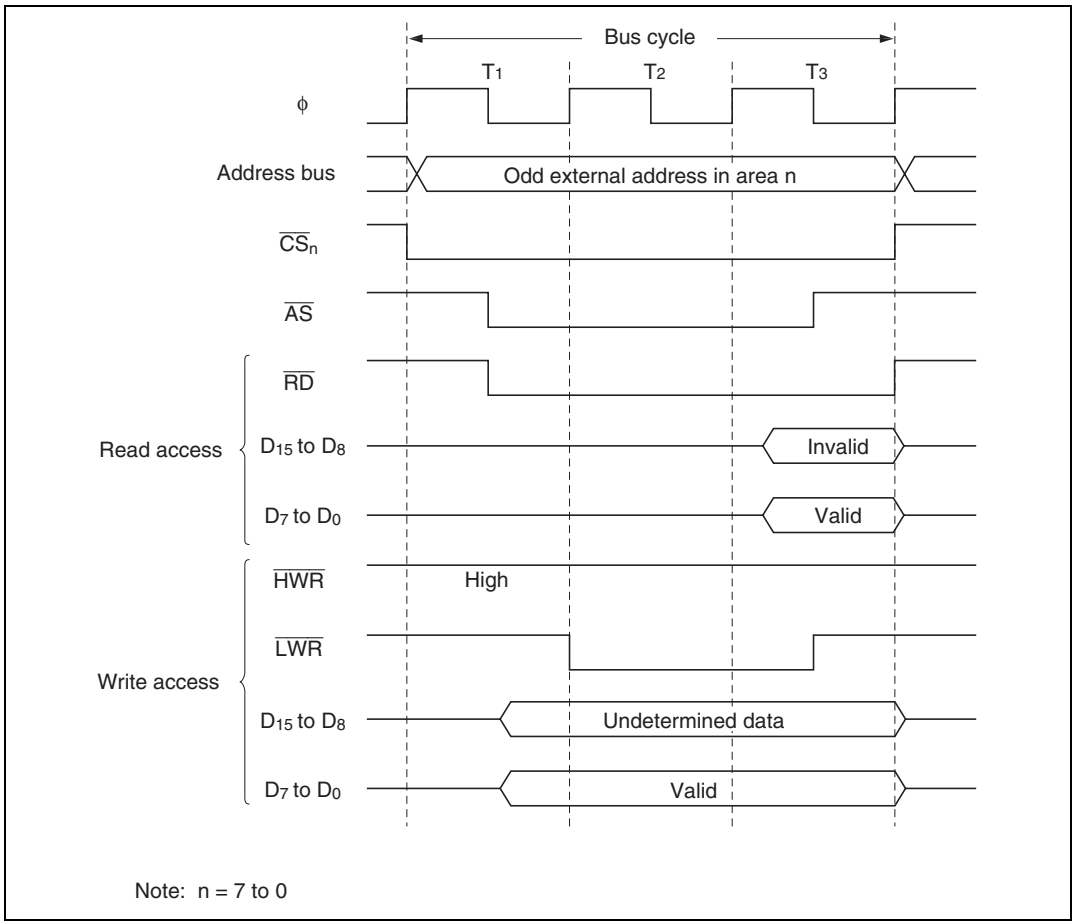

Figure 6.12 Bus Control Signal Timing for 16-Bit, Three-State-Access Area (2) (Byte Access to Odd Address)

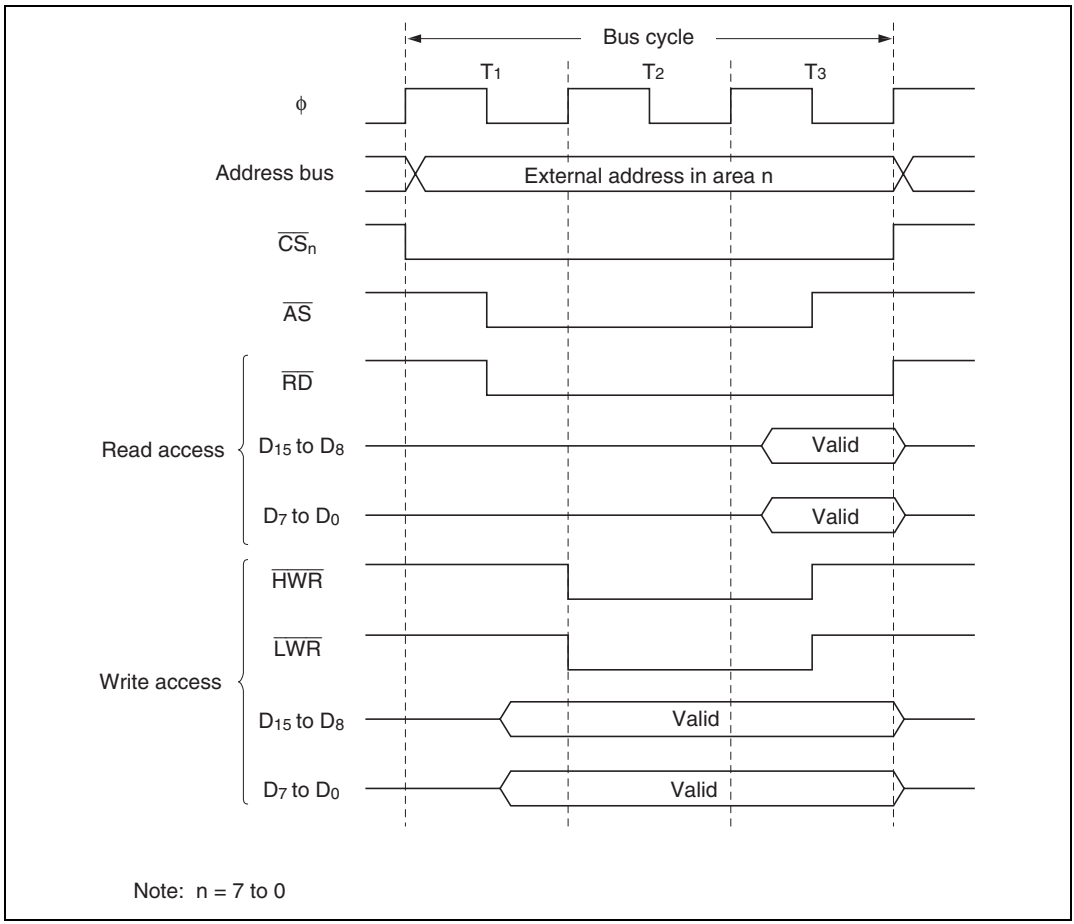

Figure 6.13 Bus Control Signal Timing for 16-Bit, Three-State-Access Area (3) (Word Access)

16-Bit, Two-State-Access Areas: Figures 6.14 to 6.16 show the timing of bus control signals for a 16-bit, two-state-access area. In these areas, the upper data bus (D_{15} to D_8) is used in accesses to even addresses and the lower data bus (D_7 to D_0) in accesses to odd addresses. Wait states cannot be inserted.

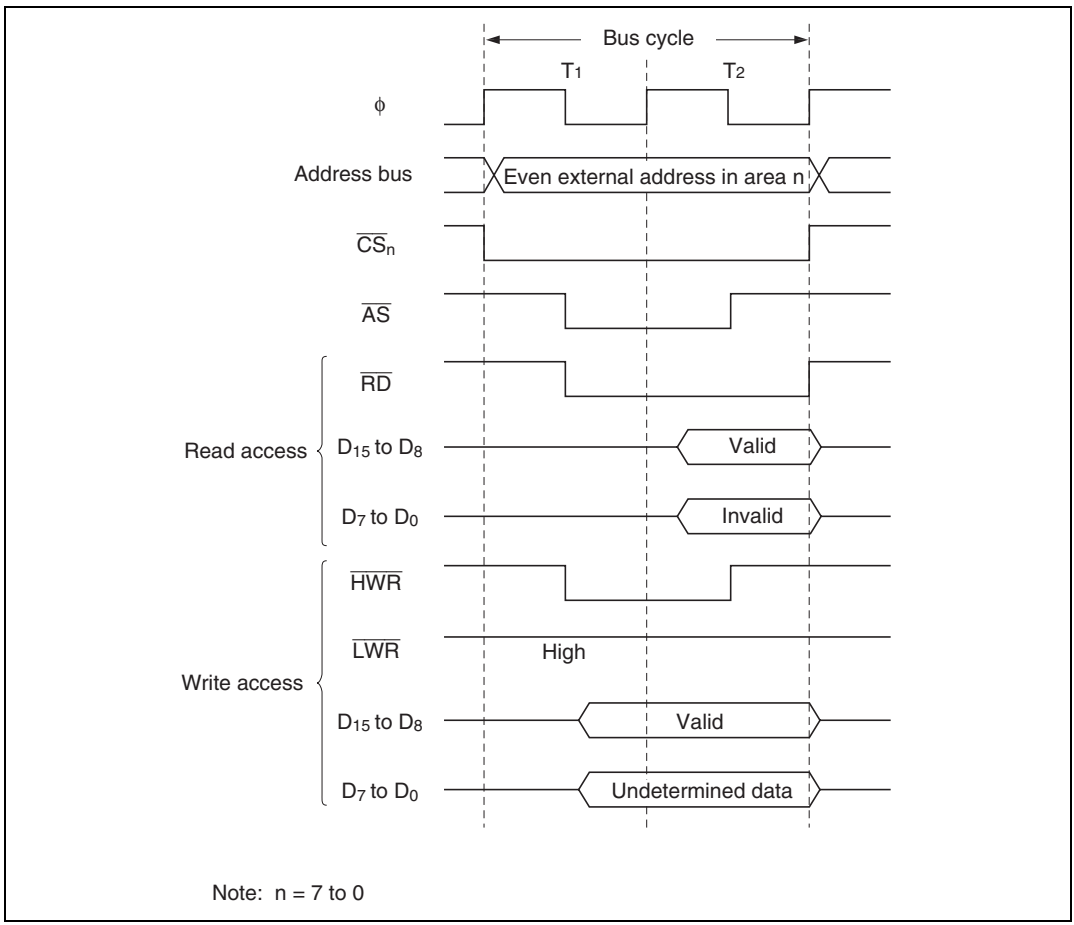

Figure 6.14 Bus Control Signal Timing for 16-Bit, Two-State-Access Area (1) (Byte Access to Even Address)

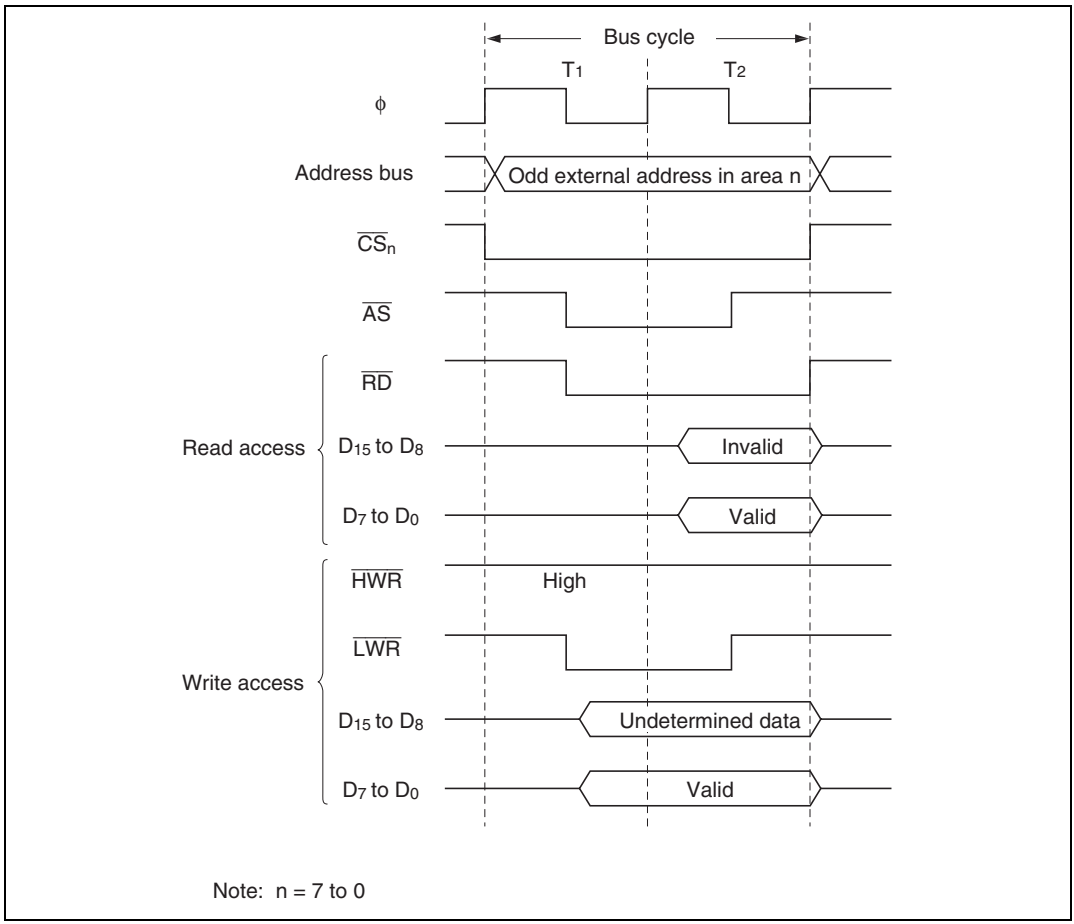

Figure 6.15 Bus Control Signal Timing for 16-Bit, Two-State-Access Area (2) (Byte Access to Odd Address)

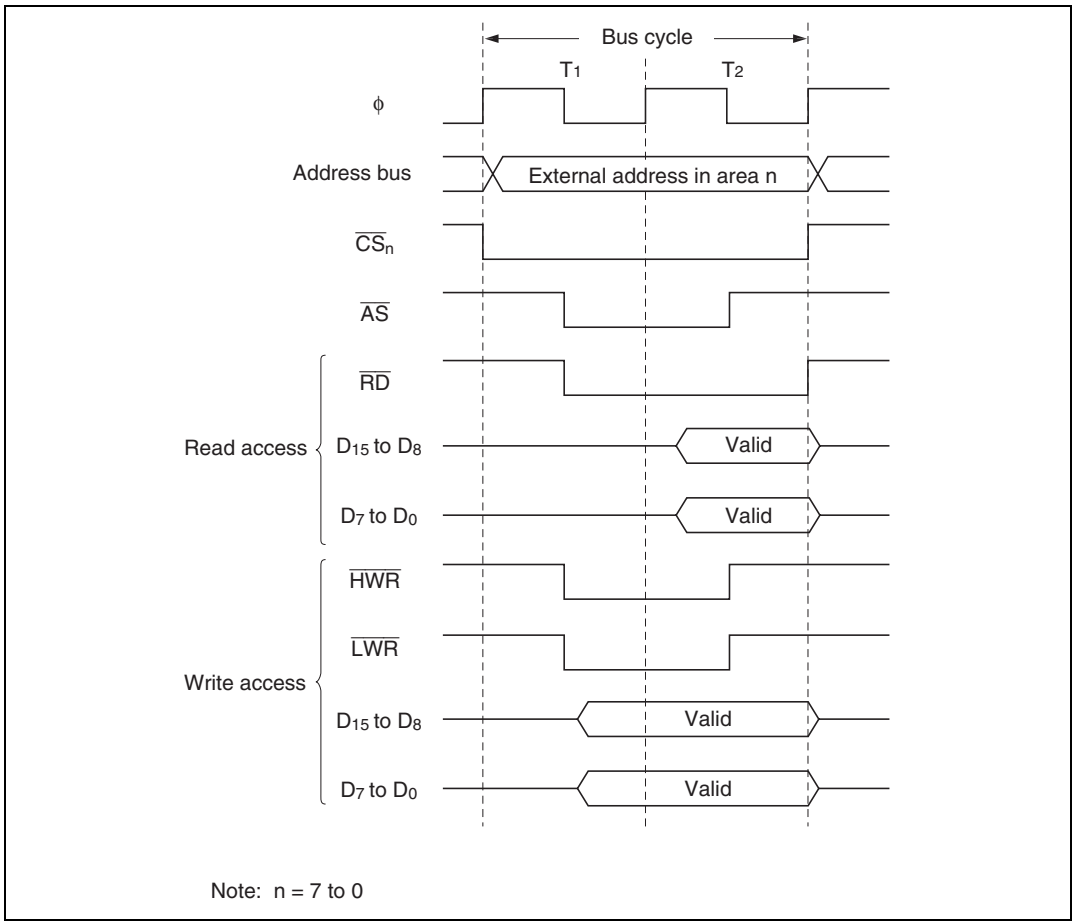

Figure 6.16 Bus Control Signal Timing for 16-Bit, Two-State-Access Area (3) (Word Access)

6.4.6 Wait Control

When accessing external space, the H8/3008 can extend the bus cycle by inserting wait states (T_w). There are two ways of inserting wait states: program wait insertion and pin wait insertion using the $\overline{\text{WAIT}}$ pin.

Program Wait Insertion: From 0 to 3 wait states can be inserted automatically between the T_2 state and T_3 state on an individual area basis in three-state access space, according to the settings of WCRH and WCRL.

Pin Wait Insertion: Setting the WAITE bit in BCR to 1 enables wait insertion by means of the $\overline{\text{WAIT}}$ pin. When external space is accessed in this state, a program wait is first inserted. If the $\overline{\text{WAIT}}$ pin is low at the falling edge of ϕ in the last T_2 or T_w state, another T_w state is inserted. If the $\overline{\text{WAIT}}$ pin is held low, T_w states are inserted until it goes high.

This is useful when inserting four or more T_w states, or when changing the number of T_w states for different external devices.

The WAITE bit setting applies to all areas.

Figure 6.17 shows an example of the timing for insertion of one program wait state in 3-state space.

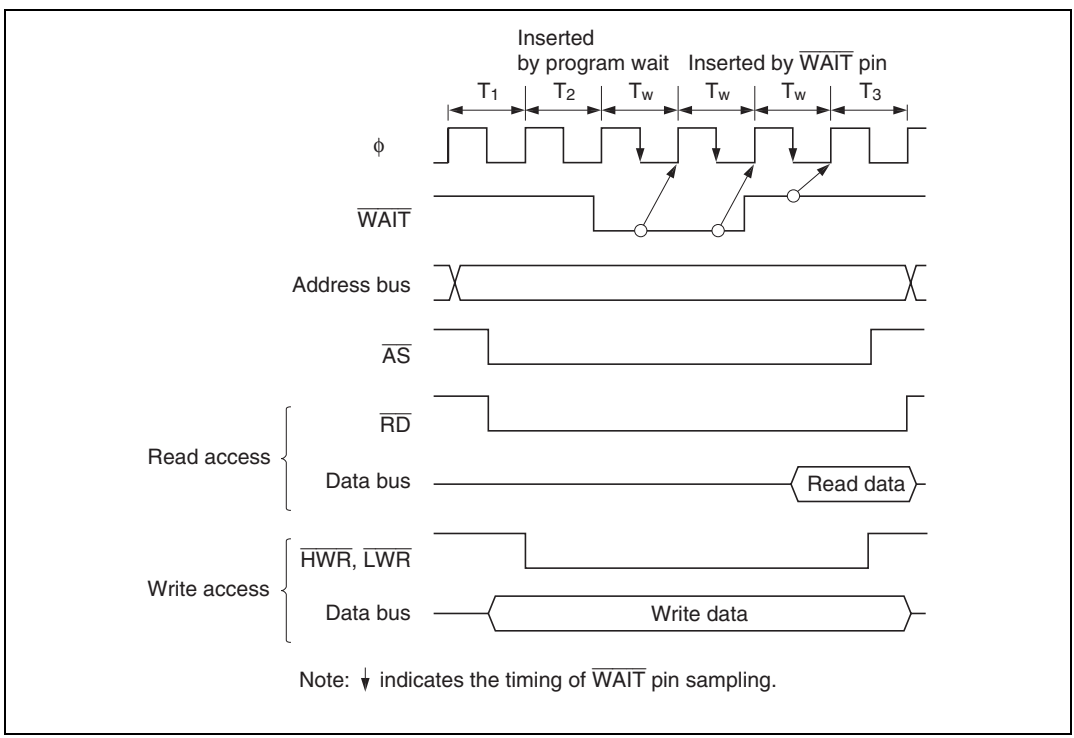

Figure 6.17 Example of Wait State Insertion Timing

6.5 Idle Cycle

6.5.1 Operation

When the H8/3008 chip accesses external space, it can insert a 1-state idle cycle (T_i) between bus cycles in the following cases: when read accesses between different areas occur consecutively, and when a write cycle occurs immediately after a read cycle. By inserting an idle cycle it is possible, for example, to avoid data collisions between ROM, which has a long output floating time, and high-speed memory, I/O interfaces, and so on.

The initial value of the ICIS1 and ICIS0 bits in BCR is 1, so that idle cycle insertion is performed in the initial state. If there are no data collisions, the ICIS bits can be cleared.

Consecutive Reads between Different Areas: If consecutive reads between different areas occur while the ICIS1 bit is set to 1 in BCR, an idle cycle is inserted at the start of the second read cycle.

Figure 6.18 shows an example of the operation in this case. In this example, bus cycle A is a read cycle from ROM with a long output floating time, and bus cycle B is a read cycle from SRAM, each being located in a different area. In (a), an idle cycle is not inserted, and a collision occurs in bus cycle B between the read data from ROM and that from SRAM. In (b), an idle cycle is inserted, and a data collision is prevented.

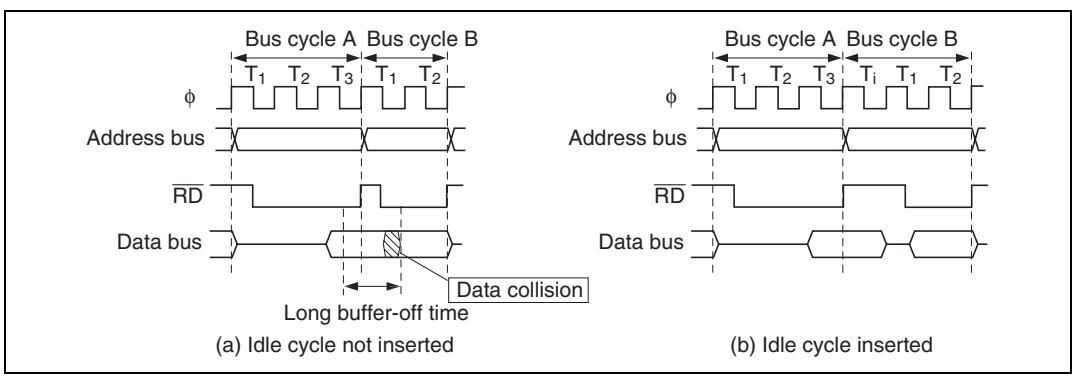

Figure 6.18 Example of Idle Cycle Operation (ICIS1 = 1)

Write after Read: If an external write occurs after an external read while the ICIS0 bit is set to 1 in BCR, an idle cycle is inserted at the start of the write cycle.

Figure 6.19 shows an example of the operation in this case. In this example, bus cycle A is a read cycle from ROM with a long output floating time, and bus cycle B is a CPU write cycle.

In (a), an idle cycle is not inserted, and a collision occurs in bus cycle B between the read data from ROM and the CPU write data. In (b), an idle cycle is inserted, and a data collision is prevented.

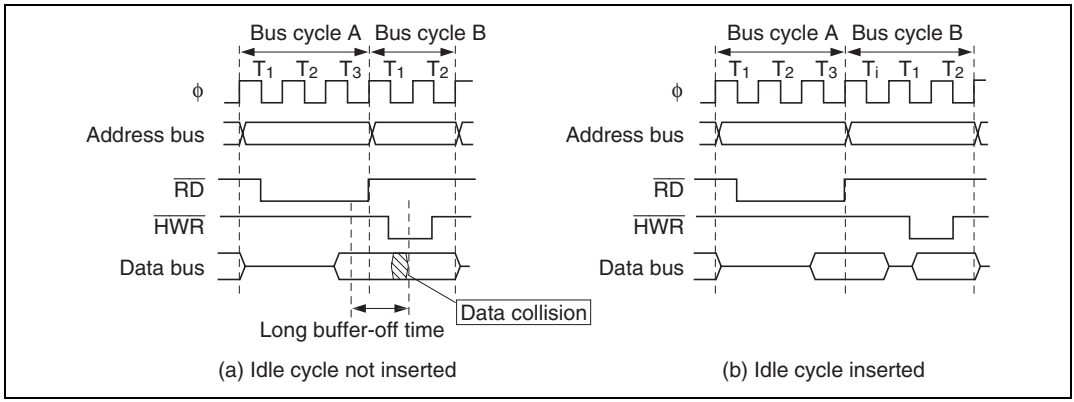

Figure 6.19 Example of Idle Cycle Operation (ICIS0 = 1)

Usage Note: When non-insertion of an idle cycle is specified, the rise (negation) of $\overline{RD}$ and fall (assertion) of $\overline{CS}_n$ may occur simultaneously. Figure 6.20 shows an example of the operation in this case.

If consecutive reads to a different external area occur while the ICIS1 bit in BCR is cleared to 0, or if an external read is followed by a write cycle for a different external area while the ICIS0 bit is cleared to 0, negation of $\overline{RD}$ in the first read cycle and assertion of $\overline{CS}_n$ in the following bus cycle will occur simultaneously. Depending on the output delay time of each signal, therefore, it is possible that the $\overline{RD}$ low output in the previous read cycle and the $\overline{CS}_n$ low output in the following bus cycle will overlap.

As long as $\overline{RD}$ and $\overline{CS}_n$ do not change simultaneously, or if there is no problem even if they do, non-insertion of an idle cycle can be specified.

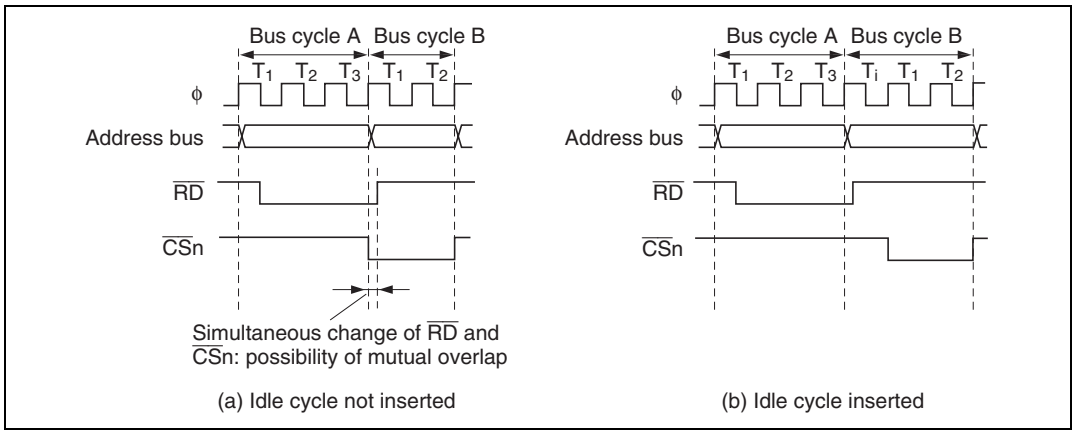

Figure 6.20 Example of Idle Cycle Operation

6.5.2 Pin States in Idle Cycle

Table 6.5 shows the pin states in an idle cycle.

Table 6.5 Pin States in Idle Cycle

Pins	Pin State
A_{23} to A_0	Next cycle address value
D_{15} to D_0	High impedance
$\overline{CS}$n	High
$\overline{AS}$	High
$\overline{RD}$	High
$\overline{HWR}$	High
$\overline{LWR}$	High

6.6 Bus Arbiter

The bus controller has a built-in bus arbiter that arbitrates between different bus masters. The bus master can be either the CPU or an external bus master. When a bus master has the bus right it can carry out read and write operations. Each bus master uses a bus request signal to request the bus right. At fixed times the bus arbiter determines priority and uses a bus acknowledge signal to grant the bus to a bus master, which can the operate using the bus.

The bus arbiter checks whether the bus request signal from a bus master is active or inactive, and returns an acknowledge signal to the bus master. When two or more bus masters request the bus, the highest-priority bus master receives an acknowledge signal. The bus master that receives an acknowledge signal can continue to use the bus until the acknowledge signal is deactivated.

The bus master priority order is:

(High) External bus master > CPU (Low)

The bus arbiter samples the bus request signals and determines priority at all times, but it does not always grant the bus immediately, even when it receives a bus request from a bus master with higher priority than the current bus master. Each bus master has certain times at which it can release the bus to a higher-priority bus master.

6.6.1 Operation

CPU: The CPU is the lowest-priority bus master. If an external bus master requests the bus while the CPU has the bus right, the bus arbiter transfers the bus right to the bus master that requested it. The bus right is transferred at the following times:

- The bus right is transferred at the boundary of a bus cycle. If word data is accessed by two consecutive byte accesses, however, the bus right is not transferred between the two byte accesses.
- If another bus master requests the bus while the CPU is performing internal operations, such as executing a multiply or divide instruction, the bus right is transferred immediately. The CPU continues its internal operations.
- If another bus master requests the bus while the CPU is in sleep mode, the bus right is transferred immediately.

External Bus Master: When the BRLE bit is set to 1 in BRCR, the bus can be released to an external bus master. The external bus master has highest priority, and requests the bus right from the bus arbiter driving the $\overline{\text{BREQ}}$ signal low. Once the external bus master acquires the bus, it keeps the bus until the $\overline{\text{BREQ}}$ signal goes high. While the bus is released to an external bus master, the H8/3008 chip holds the address bus, data bus, bus control signals ($\overline{\text{AS}}$, $\overline{\text{RD}}$, $\overline{\text{HWR}}$, and $\overline{\text{LWR}}$), and chip select signals ($\overline{\text{CS}}$n: n = 7 to 0) in the high-impedance state, and holds the $\overline{\text{BACK}}$ pin in the low output state.

The bus arbiter samples the $\overline{\text{BREQ}}$ pin at the rise of the system clock (ϕ). If $\overline{\text{BREQ}}$ is low, the bus is released to the external bus master at the appropriate opportunity. The $\overline{\text{BREQ}}$ signal should be held low until the $\overline{\text{BACK}}$ signal goes low.

When the $\overline{\text{BREQ}}$ pin is high in two consecutive samples, the $\overline{\text{BACK}}$ pin is driven high to end the bus-release cycle.

Figure 6.21 shows the timing when the bus right is requested by an external bus master during a read cycle in a two-state access area. There is a minimum interval of three states from when the $\overline{\text{BREQ}}$ signal goes low until the bus is released.

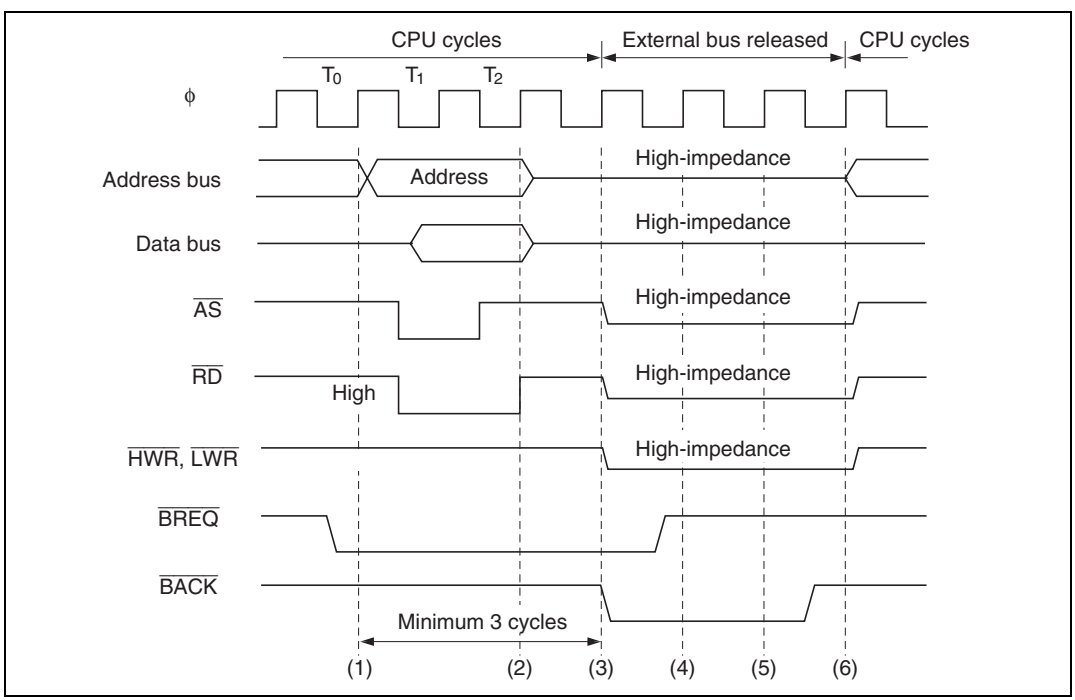

Figure 6.21 Example of External Bus Master Operation

When making a transition to software standby mode, if there is contention with a bus request from an external bus master, the $\overline{BACK}$ and strobe states may be indefinite when the transition is made.

When using software standby mode, clear the BRLE bit to 0 in BRCR before executing the SLEEP instruction.

6.7 Register and Pin Input Timing

6.7.1 Register Write Timing

ABWCR, ASTCR, WCRH, and WCRL Write Timing: Data written to ABWCR, ASTCR, WCRH, and WCRL takes effect starting from the next bus cycle. Figure 6.22 shows the timing when an instruction fetched from area 0 changes area 0 from three-state access to two-state access.

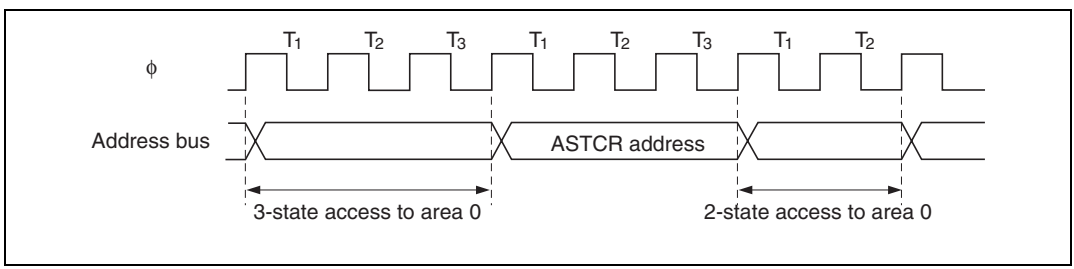

Figure 6.22 ASTCR Write Timing

DDR and CSCR Write Timing: Data written to DDR or CSCR for the port corresponding to the $\overline{CS}$n pin to switch between $\overline{CS}$n output and generic input takes effect starting from the T_3 state of the DDR write cycle. Figure 6.23 shows the timing when the $\overline{CS}_1$ pin is changed from generic input to $\overline{CS}_1$ output.

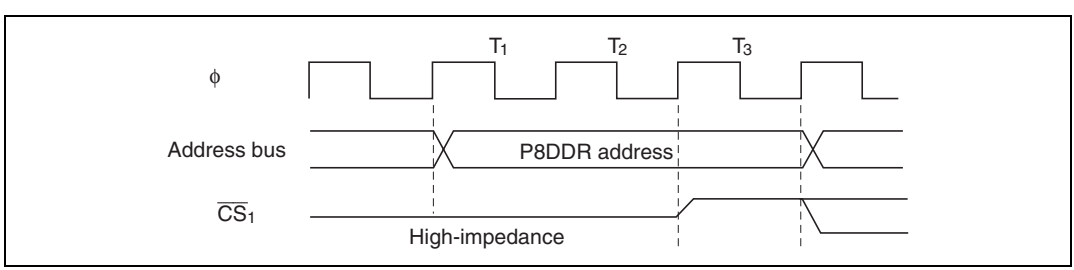

Figure 6.23 DDR Write Timing

BRCR Write Timing: Data written to BRCR to switch between A_{23}, A_{22}, A_{21}, or A_{20} output and generic input or output takes effect starting from the T_3 state of the BRCR write cycle. Figure 6.24 shows the timing when a pin is changed from generic input to A_{23}, A_{22}, A_{21}, or A_{20} output.

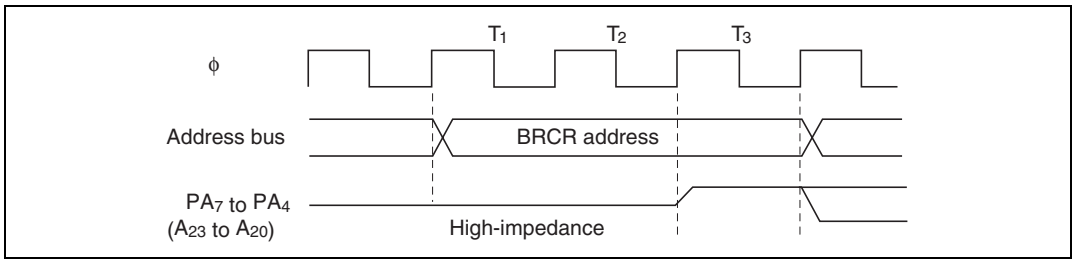

Figure 6.24 BRCR Write Timing

6.7.2 $\overline{\text{BREQ}}$ Pin Input Timing

After driving the $\overline{\text{BREQ}}$ pin low, hold it low until $\overline{\text{BACK}}$ goes low. If $\overline{\text{BREQ}}$ returns to the high level before $\overline{\text{BACK}}$ goes lows, the bus arbiter may operate incorrectly.

To terminate the external-bus-released state, hold the $\overline{\text{BREQ}}$ signal high for at least three states. If $\overline{\text{BREQ}}$ is high for too short an interval, the bus arbiter may operate incorrectly.

Section 7 I/O Ports

7.1 Overview

The H8/3008 has six input/output ports (ports 4, 6, 8, 9, A, and B) and one input-only port (port 7). Table 7.1 summarizes the port functions. The pins in each port are multiplexed as shown in table 7.1.

Each port has a data direction register (DDR) for selecting input or output, and a data register (DR) for storing output data. In addition to these registers, port 4 has an input pull-up MOS control register (PCR) for switching input pull-up MOS transistors on and off.

Ports 4, 6, and 8 can drive one TTL load and a 90-pF capacitive load. Ports 9, A, and B can drive one TTL load and a 30-pF capacitive load. Ports 4, 6, 8, 9, A, and B can drive a darlington pair. Pins $P8_2$ to $P8_0$, PA_7 to PA_0 have Schmitt-trigger input circuits.

For block diagrams of the ports see appendix C, I/O Port Block Diagrams.

Table 7.1 Port Functions

			Expanded Modes			
Port	**Description**	**Pins**	**Mode 1**	**Mode 2**	**Mode 3**	**Mode 4**
Port 4	• 8-bit I/O port • Built-in input pull-up MOS	$P4_7$ to $P4_0$/D_7 to D_0	Data input/output (D_7 to D_0) and 8-bit generic input/output 8-bit bus mode: generic input/output 16-bit bus mode: data input/output			
Port 6	• 8-bit I/O port	$P6_7$/ϕ	Clock output (ϕ) and generic input			
		$P6_6$/$\overline{LWR}$ $P6_5$/$\overline{HWR}$ $P6_4$/$\overline{RD}$ $P6_3$/$\overline{AS}$	Bus control signal output ($\overline{LWR}$, $\overline{HWR}$, $\overline{RD}$, $\overline{AS}$)			
		$P6_2$/$\overline{BACK}$ $P6_1$/$\overline{BREQ}$ $P6_0$/$\overline{WAIT}$	Bus control signal input/output ($\overline{BACK}$, $\overline{BREQ}$, $\overline{WAIT}$) and 3-bit generic input/output			
Port 7	• 8-bit I/O port	$P7_7$/AN_7/DA_1 $P7_6$/AN_6/DA_0	Analog input (AN_7, AN_6) to A/D converter, analog output (DA_1, DA_0) from D/A converter, and generic input			
		$P7_5$ to $P7_0$/ AN_5 to AN_0	Analog input (AN_5 to AN_0) to A/D converter, and generic input			

Port	Description	Pins	Expanded Modes Mode 1	Mode 2	Mode 3	Mode 4
Port 8	• 5-bit I/O port • $P8_2$ to $P8_0$ have schmitt inputs	$P8_4/\overline{CS}_0$	DDR = 0: generic input DDR = 1 (reset value): $\overline{CS}_0$ output			
		$P8_3/\overline{IRQ}_3/\overline{CS}_1/\overline{ADTRG}$	$\overline{IRQ}_3$ input, $\overline{CS}_1$ output, external trigger input ($\overline{ADTRG}$) to A/D converter, and generic input DDR = 0 (after reset): generic input DDR = 1: $\overline{CS}_1$ output			
		$P8_2/\overline{IRQ}_2/\overline{CS}_2$ $P8_1/\overline{IRQ}_1/\overline{CS}_3$	$\overline{IRQ}_2$ and $\overline{IRQ}_1$ input, $\overline{CS}_2$ and $\overline{CS}_3$ output, and generic input DDR = 0 (after reset): generic input DDR = 1: $\overline{CS}_2$ and $\overline{CS}_3$ output			
		$P8_0/\overline{IRQ}_0$	$\overline{IRQ}_0$ input, and generic input/output			
Port 9	• 6-bit I/O port	$P9_5/\overline{IRQ}_5$ /SCK_1 $P9_4/\overline{IRQ}_4$ /SCK_0 $P9_3/RxD_1$ $P9_2/RxD_0$ $P9_1/TxD_1$ $P9_0/TxD_0$	Input and output (SCK_1, SCK_0, RxD_1, RxD_0, TxD_1, TxD_0) for serial communication interfaces 1 and 0 (SCI1/0), $\overline{IRQ}_5$ and $\overline{IRQ}_4$ input, and 6-bit generic input/output			
Port A	• 8-bit I/O port • Schmitt inputs	$PA_7/TP_7/TIOCB_2/A_{20}$	Output (TP_7) from programmable timing pattern controller (TPC), input or output ($TIOCB_2$) for 16-bit timer and generic input/output		Address output (A_{20})	
		$PA_6/TP_6/TIOCA_2/A_{21}$ $PA_5/TP_5/TIOCB_1/A_{22}$ $PA_4/TP_4/TIOCA_1/A_{23}$	TPC output (TP_6 to TP_4), 16-bit timer input and output ($TIOCA_2$, $TIOCB_1$, $TIOCA_1$), and generic input/output			
		$PA_3/TP_3/TIOCB_0/TCLKD$ $PA_2/TP_2/TIOCA_0/TCLKC$ $PA_1/TP_1/TCLKB$ $PA_0/TP_0/TCLKA$	TPC output (TP_3 to TP_0), 16-bit timer input and output ($TIOCB_0$, $TIOCA_0$, TCLKD, TCLKC, TCLKB, TCLKA), 8-bit timer input (TCLKD, TCLKC, TCLKB, TCLKA), and generic input/output			

Port	Description	Pins	Expanded Modes			
			Mode 1	Mode 2	Mode 3	Mode 4
Port B	• 8-bit I/O port	PB_7/TP_{15} PB_6/TP_{14} PB_5/TP_{13} PB_4/TP_{12}	TPC output (TP_{15} to TP_{12}) and generic input/output			
		$PB_3/TP_{11}/TMIO_3/\overline{CS}_4$ $PB_2/TP_{10}/TMO_2/\overline{CS}_5$ $PB_1/TP_9/TMIO_1/\overline{CS}_6$ $PB_0/TP_8/TMO_0/\overline{CS}_7$	TPC output (TP_{11} to TP_8), 8-bit timer input and output ($TMIO_3$, TMO_2, $TMIO_1$, TMO_0), $\overline{CS}_7$ to $\overline{CS}_4$ output, and generic input/output			

Legend:

SCI0: Serial communication interface channel 0

SCI1: Serial communication interface channel 1

TPC: Programmable timing pattern controller

16TIM: 16-bit timer

8TIM: 8-bit timer

7.2 Port 4

7.2.1 Overview

Port 4 is an 8-bit input/output port which also functions as a data bus. It's pin configuration is shown in figure 7.1. The pin functions differ depending on the operating mode.

In the H8/3008, when the bus width control register (ABWCR) designates areas 0 to 7 all as 8-bit-access areas, the chip operates in 8-bit bus mode and port 4 is a generic input/output port. When at least one of areas 0 to 7 is designated as a 16-bit-access area, the chip operates in 16-bit bus mode and port 4 becomes part of the data bus.

Port 4 has software-programmable built-in pull-up MOS.

Pins in port 4 can drive one TTL load and a 90-pF capacitive load. They can also drive a darlington transistor pair.

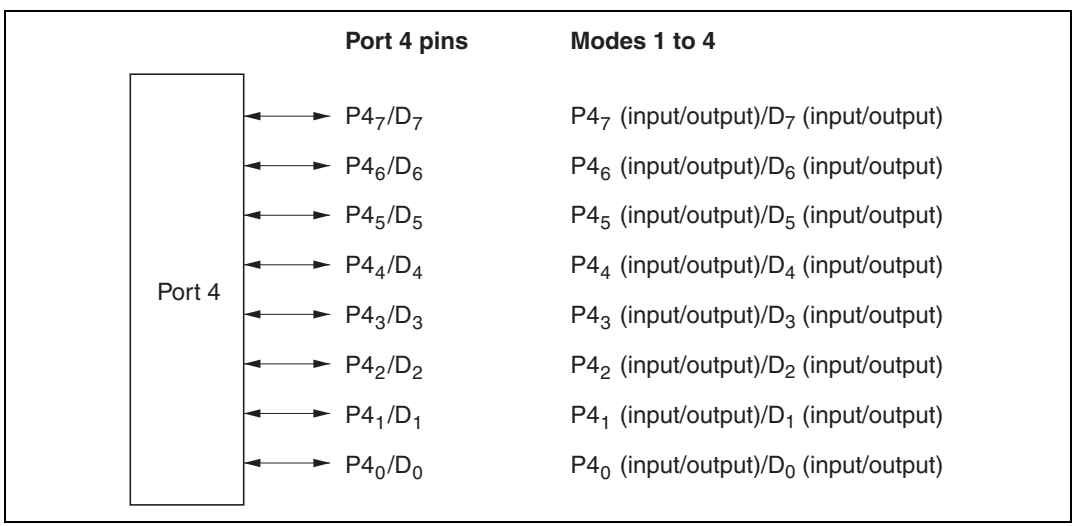

Figure 7.1 Port 4 Pin Configuration

7.2.2 Register Descriptions

Table 7.2 summarizes the registers of port 4.

Table 7.2 Port 4 Registers

Address*	Name	Abbreviation	R/W	Initial Value
H'EE003	Port 4 data direction register	P4DDR	W	H'00
H'FFFD3	Port 4 data register	P4DR	R/W	H'00
H'EE03E	Port 4 input pull-up MOS control register	P4PCR	R/W	H'00

Note: * Lower 20 bits of the address in advanced mode.

Port 4 Data Direction Register (P4DDR): P4DDR is an 8-bit write-only register that can select input or output for each pin in port 4.

Bit	7	6	5	4	3	2	1	0
	$P4_7DDR$	$P4_6DDR$	$P4_5DDR$	$P4_4DDR$	$P4_3DDR$	$P4_2DDR$	$P4_1DDR$	$P4_0DDR$
Initial value	0	0	0	0	0	0	0	0
Read/Write	W	W	W	W	W	W	W	W

Port 4 data direction 7 to 0
These bits select input or output for port 4 pins

When all areas are designated as 8-bit-access areas by the bus controller's bus width control register (ABWCR), selecting 8-bit bus mode, port 4 functions as an input/output port. In this case, a pin in port 4 becomes an output port if the corresponding P4DDR bit is set to 1, and an input port if this bit is cleared to 0.

When at least one area is designated as a 16-bit-access area, selecting 16-bit bus mode, port 4 functions as part of the data bus, regardless of the P4DDR settings.

P4DDR is a write-only register. Its value cannot be read. All bits return 1 when read.

P4DDR is initialized to H'00 by a reset and in hardware standby mode. In software standby mode it retains its previous setting.

ABWCR and P4DDR are not initialized in software standby mode. Therefore, if a transition is made to software standby mode while port 4 is functioning as an input/output port and a P4DDR bit is set to 1, the corresponding pin maintains its output state.

Port 4 Data Register (P4DR): P4DR is an 8-bit readable/writable register that stores output data for port 4. When port 4 functions as an output port, the value of this register is output. When a bit in P4DDR is set to 1, if port 4 is read the value of the corresponding P4DR bit is returned. When a bit in P4DDR is cleared to 0, if port 4 is read the corresponding pin logic level is read.

Bit	7	6	5	4	3	2	1	0
	$P4_7$	$P4_6$	$P4_5$	$P4_4$	$P4_3$	$P4_2$	$P4_1$	$P4_0$
Initial value	0	0	0	0	0	0	0	0
Read/Write	R/W	R/W	R/W	R/W	R/W	R/W	R/W	R/W

Port 4 data 7 to 0
These bits store data for port 4 pins

P4DR is initialized to H'00 by a reset and in hardware standby mode. In software standby mode it retains its previous setting.

Port 4 Input Pull-Up MOS Control Register (P4PCR): P4PCR is an 8-bit readable/writable register that controls the MOS input pull-up transistors in port 4.

Bit	7	6	5	4	3	2	1	0
	$P4_7$PCR	$P4_6$PCR	$P4_5$PCR	$P4_4$PCR	$P4_3$PCR	$P4_2$PCR	$P4_1$PCR	$P4_0$PCR
Initial value	0	0	0	0	0	0	0	0
Read/Write	R/W	R/W	R/W	R/W	R/W	R/W	R/W	R/W

Port 4 input pull-up MOS control 7 to 0
These bits control input pull-up MOS transistors built into port 4

In 8-bit bus mode in modes 1 to 4 (expanded modes), when a P4DDR bit is cleared to 0 (selecting generic input), if the corresponding P4PCR bit is set to 1, the input pull-up MOS transistor is turned on.

P4PCR is initialized to H'00 by a reset and in hardware standby mode. In software standby mode it retains its previous setting.

Table 7.3 summarizes the states of the input pull-up MOS in each operating mode.

Table 7.3 Input Pull-Up MOS Transistor States (Port 4)

Mode		Reset	Hardware Standby Mode	Software Standby Mode	Other Modes
1 to 4	8-bit bus mode	Off	Off	On/off	On/off
	16-bit bus mode			Off	Off

Legend:

Off: The input pull-up MOS transistor is always off.

On/off: The input pull-up MOS transistor is on if P4PCR = 1 and P4DDR = 0. Otherwise, it is off.

7.3 Port 6

7.3.1 Overview

Port 6 is an 8-bit input/output port that is also used for input and output of bus control signals ($\overline{LWR}$, $\overline{HWR}$, $\overline{RD}$, $\overline{AS}$, $\overline{BACK}$, $\overline{BREQ}$, $\overline{WAIT}$) and for clock (ϕ) output.

The port 6 pin configuration is shown in figure 7.2.

See table 7.5 for the selection of the pin functions.

Pins in port 6 can drive one TTL load and a 90-pF capacitive load. They can also drive a darlington transistor pair.

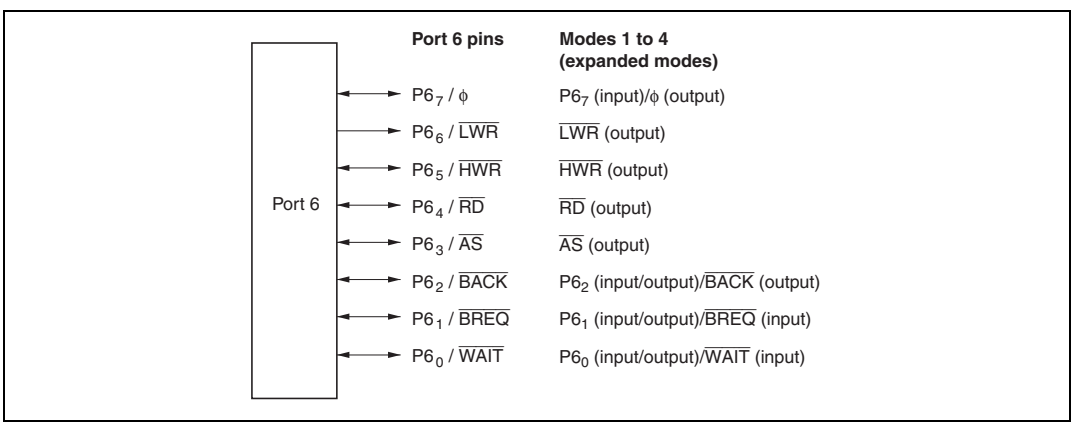

Figure 7.2 Port 6 Pin Configuration

7.3.2 Register Descriptions

Table 7.4 summarizes the registers of port 6.

Table 7.4 Port 6 Registers

Address*	Name	Abbreviation	R/W	Initial Value
H'EE005	Port 6 data direction register	P6DDR	W	H'80
H'FFFD5	Port 6 data register	P6DR	R/W	H'80

Note: * Lower 20 bits of the address in advanced mode.

Port 6 Data Direction Register (P6DDR): P6DDR is an 8-bit write-only register that can select input or output for each pin in port 6.

Bit 7 is reserved. It is fixed at 1, and cannot be modified.

Bit	7	6	5	4	3	2	1	0
	—	$P6_6DDR$	$P6_5DDR$	$P6_4DDR$	$P6_3DDR$	$P6_2DDR$	$P6_1DDR$	$P6_0DDR$
Initial value	1	0	0	0	0	0	0	0
Read/Write	—	W	W	W	W	W	W	W

Reserved bit

Port 6 data direction 6 to 0
These bits select input or output for port 6 pins

- Modes 1 to 4 (Expanded Modes)

  $P6_7$ functions as the clock output pin (ϕ) or an input port. $P6_7$ is the clock output pin (ϕ) if the PSTOP bit in MSTRCH is cleared to 0 (initial value), and an input port if this bit is set to 1.

  $P6_6$ to $P6_3$ function as bus control output pins ($\overline{LWR}$, $\overline{HWR}$, $\overline{RD}$, and $\overline{AS}$), regardless of the settings of bits $P6_6DDR$ to $P6_3DDR$.

  $P6_2$ to $P6_0$ function as bus control input/output pins ($\overline{BACK}$, $\overline{BREQ}$, and $\overline{WAIT}$) or input/output ports. For the method of selecting the pin functions, see table 7.7.

  When $P6_2$ to $P6_0$ function as input/output ports, the pin becomes an output port if the corresponding P6DDR bit is set to 1, and an input port if this bit is cleared to 0.

Port 6 Data Register (P6DR): P6DR is an 8-bit readable/writable register that stores output data for port 6. When port 6 functions as an output port, the value of this register is output. For bit 7, a value of 1 is returned if the bit is read while the PSTOP bit in MSTCRH is cleared to 0, and the P67 pin logic level is returned if the bit is read while the PSTOP bit is set to 1. Bit 7 cannot be modified. For bits 6 to 0, the pin logic level is returned if the bit is read while the corresponding bit in P6DDR is cleared to 0, and the P6DR value is returned if the bit is read while the corresponding bit in P6DDR is set to 1.

Bit	7	6	5	4	3	2	1	0
	$P6_7$	$P6_6$	$P6_5$	$P6_4$	$P6_3$	$P6_2$	$P6_1$	$P6_0$
Initial value	1	0	0	0	0	0	0	0
Read/Write	R	R/W	R/W	R/W	R/W	R/W	R/W	R/W

Port 6 data 7 to 0
These bits store data for port 6 pins

P6DR is initialized to H'80 by a reset and in hardware standby mode. In software standby mode it retains its previous setting.

Table 7.5 Port 6 Pin Functions in Modes 1 to 4

Pin	Pin Functions and Selection Method
$P6_7/\phi$	Bit PSTOP in MSTCRH selects the pin function.

PSTOP	0	1
Pin function	ϕ output	$P6_7$ input

$\overline{LWR}$	Functions as $\overline{LWR}$ regardless of the setting of bit $P6_6DDR$

$P6_6DDR$	0	1
Pin function	$\overline{LWR}$ output	

$\overline{HWR}$	Functions as $\overline{HWR}$ regardless of the setting of bit $P6_5DDR$

$P6_5DDR$	0	1
Pin function	$\overline{HWR}$ output	

$\overline{RD}$	Functions as $\overline{RD}$ regardless of the setting of bit $P6_4DDR$

$P6_4DDR$	0	1
Pin function	$\overline{RD}$ output	

$\overline{AS}$	Functions as $\overline{AS}$ regardless of the setting of bit $P6_3DDR$

$P6_3DDR$	0	1
Pin function	$\overline{AS}$ output	

$P6_2/\overline{BACK}$	Bit BRLE in BRCR and bit $P6_2DDR$ select the pin function as follows.

BRLE	0		1
$P6_2DDR$	0	1	—
Pin function	$P6_2$ input	$P6_2$ output	$\overline{BACK}$ output

$P6_1/\overline{BREQ}$	Bit BRLE in BRCR and bit $P6_1DDR$ select the pin function as follows.

BRLE	0		1
$P6_1DDR$	0	1	—
Pin function	$P6_1$ input	$P6_1$ output	$\overline{BREQ}$ input

$P6_0/\overline{WAIT}$	Bit WAITE in BCR and bit $P6_0DDR$ select the pin function as follows.

WAITE	0		1
$P6_0DDR$	0	1	0*
Pin function	$P6_0$ input	$P6_0$ output	$\overline{WAIT}$ input

Note: * Do not set bit $P6_0DDR$ to 1.

7.4 Port 7

7.4.1 Overview

Port 7 is an 8-bit input port that is also used for analog input to the A/D converter and analog output from the D/A converter. The pin functions are the same in all operating modes. Figure 7.3 shows the pin configuration of port 7.

See section 14, A/D Converter, for details of the A/D converter analog input pins, and section 15, D/A Converter, for details of the D/A converter analog output pins.

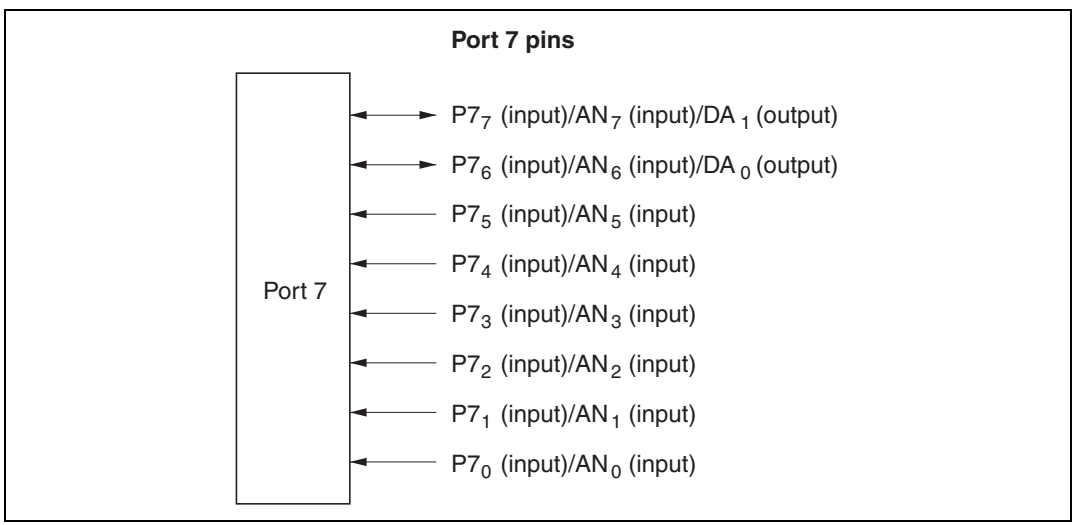

Figure 7.3 Port 7 Pin Configuration

7.4.2 Register Description

Table 7.6 summarizes the port 7 register. Port 7 is an input port, and port 7 has no data direction register.

Table 7.6 Port 7 Data Register

Address*	Name	Abbreviation	R/W	Initial Value
H'FFFD6	Port 7 data register	P7DR	R	Undetermined

Note: * Lower 20 bits of the address in advanced mode.

Port 7 Data Register (P7DR)

Bit	7	6	5	4	3	2	1	0
	$P7_7$	$P7_6$	$P7_5$	$P7_4$	$P7_3$	$P7_2$	$P7_1$	$P7_0$
Initial value	—*	—*	—*	—*	—*	—*	—*	—*
Read/Write	R	R	R	R	R	R	R	R

Note: * Determined by pins $P7_7$ to $P7_0$.

When port 7 is read, the pin logic levels are always read. P7DR cannot be modified.

7.5 Port 8

7.5.1 Overview

Port 8 is a 5-bit input/output port that is also used for $\overline{CS}_3$ to $\overline{CS}_0$ output, $\overline{IRQ}_3$ to $\overline{IRQ}_0$ input, and A/D converter $\overline{ADTRG}$ input. Figure 7.4 shows the pin configuration of port 8.

In the H8/3008, port 8 can provide $\overline{CS}_3$ to $\overline{CS}_0$ output, $\overline{IRQ}_3$ to $\overline{IRQ}_0$ input, and $\overline{ADTRG}$ input. See table 7.8 for the selection of pin functions in expanded modes.

See section 14, A/D Converter, for a description of the A/D converter's $\overline{ADTRG}$ input pin.

The $\overline{IRQ}_3$ to $\overline{IRQ}_0$ functions are selected by IER settings, regardless of whether the pin is used for input or output. Caution is therefore required. For details see section 5.3.1, External Interrupts.

Pins in port 8 can drive one TTL load and a 90-pF capacitive load. They can also drive a darlington transistor pair.

Pins $P8_2$ to $P8_0$ have Schmitt-trigger inputs.

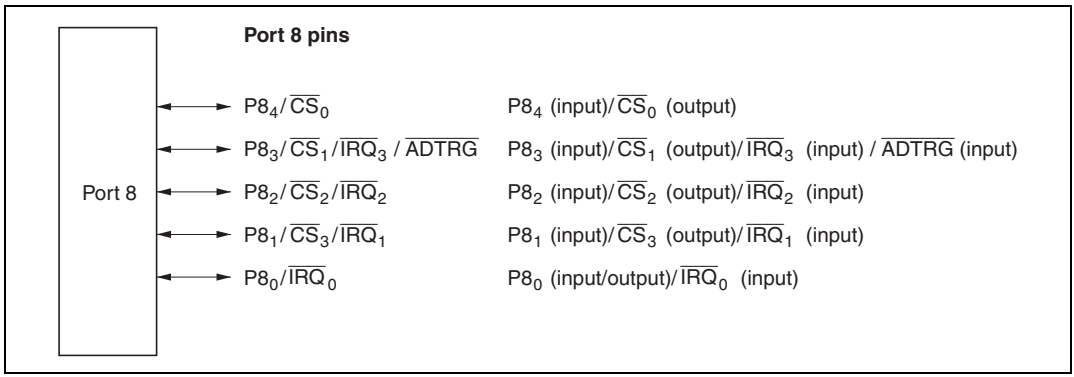

Figure 7.4 Port 8 Pin Configuration

7.5.2 Register Descriptions

Table 7.7 summarizes the registers of port 8.

Table 7.7 Port 8 Registers

Address*	Name	Abbreviation	R/W	Initial Value
H'EE007	Port 8 data direction register	P8DDR	W	H'F0
H'FFFD7	Port 8 data register	P8DR	R/W	H'E0

Note: * Lower 20 bits of the address in advanced mode.

Port 8 Data Direction Register (P8DDR): P8DDR is an 8-bit write-only register that can select input or output for each pin in port 8.

Bits 7 to 5 are reserved. They are fixed at 1, and cannot be modified.

Bit	7	6	5	4	3	2	1	0
	—	—	—	P8$_4$DDR	P8$_3$DDR	P8$_2$DDR	P8$_1$DDR	P8$_0$DDR
Initial value	1	1	1	1	0	0	0	0
Read/Write	—	—	—	W	W	W	W	W
	Reserved bits			**Port 8 data direction 4 to 0** These bits select input or output for port 8 pins				

When bits in P8DDR bit are set to 1, P8$_4$ to P8$_1$ become $\overline{CS}_0$ to $\overline{CS}_3$ output pins. When bits in P8DDR are cleared to 0, the corresponding pins become input ports.

In the H8/3008, following a reset $P8_4$ functions as the $\overline{CS}_0$ output, while $\overline{CS}_1$ to $\overline{CS}_3$ are input ports.

P8DDR is a write-only register. Its value cannot be read. All bits return 1 when read.

P8DDR is initialized to H'F0 by a reset and in hardware standby mode. In software standby mode P8DDR retains its previous setting. Therefore, if a transition is made to software standby mode while port 8 is functioning as an input/output port and a P8DDR bit is set to 1, the corresponding pin maintains its output state.

Port 8 Data Register (P8DR): P8DR is an 8-bit readable/writable register that stores output data for port 8. When port 8 functions as an output port, the value of this register is output. When a bit in P8DDR is set to 1, if port 8 is read the value of the corresponding P8DR bit is returned. When a bit in P8DDR is cleared to 0, if port 8 is read the corresponding pin logic level is read.

Bits 7 to 5 are reserved. They are fixed at 1, and cannot be modified.

Bit	7	6	5	4	3	2	1	0
	—	—	—	$P8_4$	$P8_3$	$P8_2$	$P8_1$	$P8_0$
Initial value	1	1	1	0	0	0	0	0
Read/Write	—	—	—	R/W	R/W	R/W	R/W	R/W
	Reserved bits			**Port 8 data 4 to 0** These bits store data for port 8 pins				

P8DR is initialized to H'E0 by a reset and in hardware standby mode. In software standby mode it retains its previous setting.

Table 7.8 Port 8 Pin Functions in Modes 1 to 4

Pin	Pin Functions and Selection Method
$P8_4/\overline{CS}_0$	Bit $P8_4$DDR selects the pin function as follows.

$P8_4$DDR	0	1
Pin function	$P8_4$ input	$\overline{CS}_0$ output

Pin	Pin Functions and Selection Method
$P8_3/\overline{CS}_1/\overline{IRQ}_3/\overline{ADTRG}$	Bit $P8_3$DDR selects the pin function as follows

$P8_3$DDR	0	1
Pin function	$P8_3$ input	$\overline{CS}_1$ output
	$\overline{IRQ}_3$ input	
	$\overline{ADTRG}$ input	

Pin	Pin Functions and Selection Method
$P8_2/\overline{CS}_2/\overline{IRQ}_2$	Bit $P8_2$DDR selects the pin function as follows.

$P8_2$DDR	0	1
Pin function	$P8_2$ input	$\overline{CS}_2$ output
	$\overline{IRQ}_2$ input	

Pin	Pin Functions and Selection Method
$P8_1/\overline{CS}_3/\overline{IRQ}_1$	Bit $P8_1$DDR selects the pin function as follows.

$P8_1$DDR	0	1
Pin function	P81 input	$\overline{CS}_3$ output
	$\overline{IRQ}_1$ input	

Pin	Pin Functions and Selection Method
$P8_0/\overline{IRQ}_0$	Bit $P8_0$DDR selects the pin function as follows.

$P8_0$DDR	0	1
Pin function	$P8_0$ input	$P8_0$ output
	$\overline{IRQ}_0$ input	

7.6 Port 9

7.6.1 Overview

Port 9 is a 6-bit input/output port that is also used for input and output (TxD_0, TxD_1, RxD_0, RxD_1, SCK_0, SCK_1) by serial communication interface channels 0 and 1 (SCI0 and SCI1), and for $\overline{IRQ_5}$ and $\overline{IRQ_4}$ input. See table 7.10 for the selection of pin functions.

The $\overline{IRQ_5}$ and $\overline{IRQ_4}$ functions are selected by IER settings, regardless of whether the pin is used for input or output. Caution is therefore required. For details see section 5.3.1, External Interrupts.

Port 9 has the same set of pin functions in all operating modes. Figure 7.5 shows the pin configuration of port 9.

Pins in port 9 can drive one TTL load and a 30-pF capacitive load. They can also drive a darlington transistor pair.

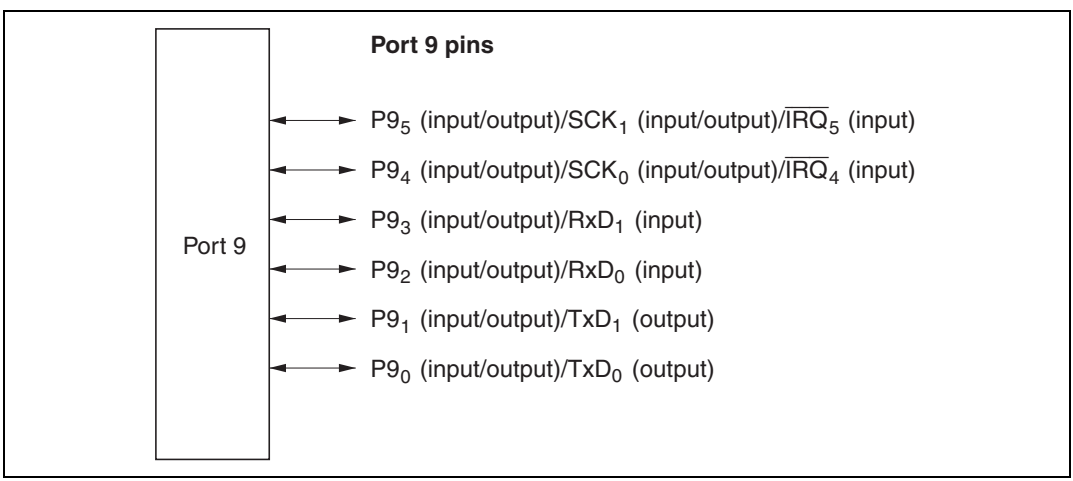

Figure 7.5 Port 9 Pin Configuration

7.6.2 Register Descriptions

Table 7.9 summarizes the registers of port 9.

Table 7.9 Port 9 Registers

Address*	Name	Abbreviation	R/W	Initial Value
H'EE008	Port 9 data direction register	P9DDR	W	H'C0
H'FFFD8	Port 9 data register	P9DR	R/W	H'C0

Note: * Lower 20 bits of the address in advanced mode.

Port 9 Data Direction Register (P9DDR): P9DDR is an 8-bit write-only register that can select input or output for each pin in port 9.

Bits 7 and 6 are reserved. They are fixed at 1, and cannot be modified.

Bit	7	6	5	4	3	2	1	0
	—	—	$P9_5DDR$	$P9_4DDR$	$P9_3DDR$	$P9_2DDR$	$P9_1DDR$	$P9_0DDR$
Initial value	1	1	0	0	0	0	0	0
Read/Write	—	—	W	W	W	W	W	W

Reserved bits

Port 9 data direction 5 to 0
These bits select input or output for port 9 pins

When port 9 functions as an input/output port, a pin in port 9 becomes an output port if the corresponding P9DDR bit is set to 1, and an input port if this bit is cleared to 0. For the method of selecting the pin functions, see table 7.10.

P9DDR is a write-only register. Its value cannot be read. All bits return 1 when read.

P9DDR is initialized to H'C0 by a reset and in hardware standby mode. In software standby mode it retains its previous setting. Therefore, if a transition is made to software standby mode while port 9 is functioning as an input/output port and a P9DDR bit is set to 1, the corresponding pin maintains its output state.

Port 9 Data Register (P9DR): P9DR is an 8-bit readable/writable register that stores output data for port 9. When port 9 functions as an output port, the value of this register is output. When a bit in P9DDR is set to 1, if port 9 is read the value of the corresponding P9DR bit is returned. When a bit in P9DDR is cleared to 0, if port 9 is read the corresponding pin logic level is read.

Bits 7 and 6 are reserved. They are fixed at 1, and cannot be modified.

Bit	7	6	5	4	3	2	1	0
	—	—	$P9_5$	$P9_4$	$P9_3$	$P9_2$	$P9_1$	$P9_0$
Initial value	1	1	0	0	0	0	0	0
Read/Write	—	—	R/W	R/W	R/W	R/W	R/W	R/W

Reserved bits

Port 9 data 5 to 0
These bits store data for port 9 pins

P9DR is initialized to H'C0 by a reset and in hardware standby mode. In software standby mode it retains its previous setting.

Table 7.10 Port 9 Pin Functions

Pin	Pin Functions and Selection Method

$P9_5/SCK_1/\overline{IRQ}_5$

Bit C/$\overline{A}$ in SMR of SCI1, bits CKE0 and CKE1 in SCR, and bit $P9_5$DDR select the pin function as follows.

CKE1	0				1
C/$\overline{A}$	0			1	—
CKE0	0		1	—	—
$P9_5$DDR	0	1	—	—	—
Pin function	$P9_5$ input	$P9_5$ output	SCK_1 output	SCK_1 output	SCK_1 input
	$\overline{IRQ}_5$ input				

$P9_4/SCK_0/\overline{IRQ}_4$

Bit C/$\overline{A}$ in SMR of SCI0, bits CKE0 and CKE1 in SCR, and bit $P9_4$DDR select the pin function as follows.

CKE1	0				1
C/$\overline{A}$	0			1	—
CKE0	0		1	—	—
$P9_4$DDR	0	1	—	—	—
Pin function	$P9_4$ input	$P9_4$ output	SCK_0 output	SCK_0 output	SCK_0 input
	$\overline{IRQ}_4$ input				

$P9_3/RxD_1$

Bit RE in SCR of SCI1, bit SMIF in SCMR, and bit $P9_3$DDR select the pin function as follows.

SMIF	0			1
RE	0		1	—
$P9_3$DDR	0	1	—	—
Pin function	$P9_3$ input	$P9_3$ output	RxD_1 input	RxD_1 input

$P9_2/RxD_0$

Bit RE in SCR of SCI0, bit SMIF in SCMR, and bit $P9_2$DDR select the pin function as follows.

SMIF	0			1
RE	0		1	—
$P9_2$DDR	0	1	—	—
Pin function	$P9_2$ input	$P9_2$ output	RxD_0 input	RxD_0 input

Pin	Pin Functions and Selection Method
$P9_1/TxD_1$	Bit TE in SCR of SCI1, bit SMIF in SCMR, and bit $P9_1$DDR select the pin function as follows.

SMIF	0			1
TE	0		1	—
$P9_1$DDR	0	1	—	—
Pin function	$P9_1$ input	$P9_1$ output	TxD_1 output	TxD_1 output*

Note: * Functions as the TxD_1 output pin, but there are two states: one in which the pin is driven, and another in which the pin is at high-impedance.

$P9_0/TxD_0$

Bit TE in SCR of SCI0, bit SMIF in SCMR, and bit $P9_0$DDR select the pin function as follows.

SMIF	0			1
TE	0		1	—
$P9_0$DDR	0	1	—	—
Pin function	$P9_0$ input	$P9_0$ output	TxD_0 output	TxD_0 output*

Note: * Functions as the TxD_0 output pin, but there are two states: one in which the pin is driven, and another in which the pin is at high-impedance.

7.7 Port A

7.7.1 Overview

Port A is an 8-bit input/output port that is also used for output (TP_7 to TP_0) from the programmable timing pattern controller (TPC), input and output ($TIOCB_2$, $TIOCA_2$, $TIOCB_1$, $TIOCA_1$, $TIOCB_0$, $TIOCA_0$, TCLKD, TCLKC, TCLKB, TCLKA) by the 16-bit timer, clock input (TCLKD, TCLKC, TCLKB, TCLKA) to the 8-bit timer, and address output (A_{23} to A_{20}). A reset or hardware standby transition leaves port A as an input port, except that in modes 3 and 4, one pin is always used for A_{20} output. See tables 7.12 to 7.14 for the selection of pin functions.

Usage of pins for TPC, 16-bit timer, and 8-bit timer input and output is described in the sections on those modules. For output of address bits A_{23} to A_{20} in modes 3 and 4, see section 6.2.4, Bus Release Control Register (BRCR). Pins not assigned to any of these functions are available for generic input/output. Figure 7.6 shows the pin configuration of port A.

Pins in port A can drive one TTL load and a 30-pF capacitive load. They can also drive a darlington transistor pair. Port A has Schmitt-trigger inputs.

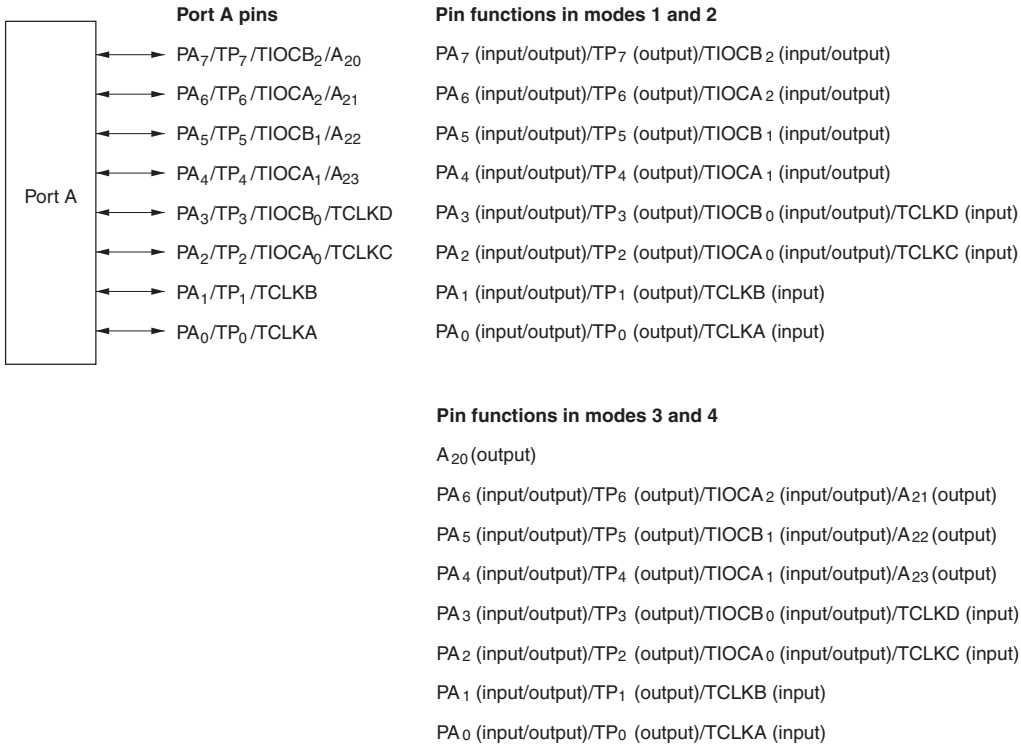

Figure 7.6 Port A Pin Configuration

7.7.2 Register Descriptions

Table 7.11 summarizes the registers of port A.

Table 7.11 Port A Registers

				Initial Value	
Address*	**Name**		**R/W**	**Modes 1 and 2**	**Modes 3 and 4**
H'EE009	Port A data direction register	PADDR	W	H'00	H'80
H'FFFD9	Port A data register	PADR	R/W	H'00	H'00

Note: * Lower 20 bits of the address in advanced mode.

Port A Data Direction Register (PADDR): PADDR is an 8-bit write-only register that can select input or output for each pin in port A. When pins are used for TPC output, the corresponding PADDR bits must also be set.

Bit		7	6	5	4	3	2	1	0
		PA_7DDR	PA_6DDR	PA_5DDR	PA_4DDR	PA_3DDR	PA_2DDR	PA_1DDR	PA_0DDR
Modes 3 and 4	Initial value	1	0	0	0	0	0	0	0
	Read/Write	—	W	W	W	W	W	W	W
Modes 1 and 2	Initial value	0	0	0	0	0	0	0	0
	Read/Write	W	W	W	W	W	W	W	W

Port A data direction 7 to 0
These bits select input or output for port A pins

The pin functions that can be selected for pins PA_7 to PA_4 differ between modes 1 and 2, and modes 3 and 4. For the method of selecting the pin functions, see tables 7.12 and 7.13.

The pin functions that can be selected for pins PA_3 to PA_0 are the same in modes 1 to 4. For the method of selecting the pin functions, see table 7.14.

When port A functions as an input/output port, a pin in port A becomes an output port if the corresponding PADDR bit is set to 1, and an input port if this bit is cleared to 0. In modes 3 and 4, PA_7DDR is fixed at 1 and PA_7 functions as the A_{20} address output pin.

PADDR is a write-only register. Its value cannot be read. All bits return 1 when read.

PADDR is initialized to H'00 by a reset and in hardware standby mode in modes 1 and 2. It is initialized to H'80 by a reset and in hardware standby mode in modes 3 and 4. In software standby mode it retains its previous setting. Therefore, if a transition is made to software standby mode while port A is functioning as an input/output port and a PADDR bit is set to 1, the corresponding pin maintains its output state.

Port A Data Register (PADR): PADR is an 8-bit readable/writable register that stores output data for port A. When port A functions as an output port, the value of this register is output. When a bit in PADDR is set to 1, if port A is read the value of the corresponding PADR bit is returned. When a bit in PADDR is cleared to 0, if port A is read the corresponding pin logic level is read.

Bit	7	6	5	4	3	2	1	0
	PA_7	PA_6	PA_5	PA_4	PA_3	PA_2	PA_1	PA_0
Initial value	0	0	0	0	0	0	0	0
Read/Write	R/W	R/W	R/W	R/W	R/W	R/W	R/W	R/W

Port A data 7 to 0
These bits store data for port A pins

PADR is initialized to H'00 by a reset and in hardware standby mode. In software standby mode it retains its previous setting.

Table 7.12 Port A Pin Functions (Modes 1 and 2)

Pin	Pin Functions and Selection Method
$PA_7/TP_7/TIOCB_2$	Bit PWM2 in TMDR, bits IOB2 to IOB0 in TIOR2, bit NDER7 in NDERA, and bit PA7DDR select the pin function as follows.

16-bit timer channel 2 settings	(1) in table below	(2) in table below		
PA_7DDR	—	0	1	1
NDER7	—	—	0	1
Pin function	$TIOCB_2$ output	PA_7 input	PA_7 output	TP_7 output
		$TIOCB_2$ input*		

Note: * $TIOCB_2$ input when IOB2 = 1 and PWM2 = 0.

16-bit timer channel 2 settings	(2)	(1)		(2)
IOB2	0			1
IOB1	0	0	1	—
IOB0	0	1	—	—

Pin	Pin Functions and Selection Method
$PA_6/TP_6/TIOCA_2$	Bit PWM2 in TMDR, bits IOA2 to IOA0 in TIOR2, bit NDER6 in NDERA, and bit PA_6DDR select the pin function as follows.

16-bit timer channel 2 settings	(1) in table below	(2) in table below		
PA_6DDR	—	0	1	1
NDER6	—	—	0	1
Pin function	$TIOCA_2$ output	PA_6 input	PA_6 output	TP_6 output
		$TIOCA_2$ input*		

Note: * $TIOCA_2$ input when IOA2 = 1.

16-bit timer channel 2 settings	(2)	(1)		(2)	(1)
PWM2	0				1
IOA2	0			1	—
IOA1	0	0	1	—	—
IOA0	0	1	—	—	—

Pin	Pin Functions and Selection Method
$PA_5/TP_5/TIOCB_1$	Bit PWM1 in TMDR, bits IOB2 to IOB0 in TIOR1, bit NDER5 in NDERA, and bit PA_5DDR select the pin function as follows.

16-bit timer channel 1 settings	(1) in table below	(2) in table below		
PA_5DDR	—	0	1	1
NDER5	—	—	0	1
Pin function	$TIOCB_1$ output	PA_5 input	PA_5 output	TP_5 output
		$TIOCB_1$ input*		

Note: * $TIOCB_1$ input when IOB2 = 1 and PWM1 = 0.

16-bit timer channel 1 settings	(2)	(1)		(2)
IOB2	0			1
IOB1	0	0	1	—
IOB0	0	1	—	—

$PA_4/TP_4/TIOCA_1$	Bit PWM1 in TMDR, bits IOA2 to IOA0 in TIOR1, bit NDER4 in NDERA, and bit PA_4DDR select the pin function as follows.

16-bit timer channel 1 settings	(1) in table below	(2) in table below		
PA_4DDR	—	0	1	1
NDER4	—	—	0	1
Pin function	$TIOCA_1$ output	PA_4 input	PA_4 output	TP_4 output
		$TIOCA_1$ input*		

Note: * $TIOCA_1$ input when IOA2 = 1.

16-bit timer channel 1 settings	(2)	(1)		(2)	(1)
PWM1	0				1
IOA2	0			1	—
IOA1	0	0	1	—	—
IOA0	0	1	—	—	—

Table 7.13 Port A Pin Functions (Modes 3 and 4)

Pin	Pin Functions and Selection Method
A_{20}	Always used as A_{20} output.

Pin function	A_{20} output

$PA_6/TP_6/TIOCA_2/A_{21}$	Bit PWM2 in TMDR, bits IOA2 to IOA0 in TIOR2, bit NDER6 in NDERA, bit A21E in BRCR, and bit PA_6DDR select the pin function as follows.

A21E	1				0
16-bit timer channel 2 settings	(1) in table below	(2) in table below			—
PA_6DDR	—	0	1	1	—
NDER6	—	—	0	1	—
Pin function	$TIOCA_2$ output	PA_6 input	PA_6 output	TP_6 output	A_{21} output
		$TIOCA_2$ input*			

Note: * $TIOCA_2$ input when IOA2 = 1.

16-bit timer channel 2 settings	(2)	(1)		(2)	(1)
PWM2	0				1
IOA2	0			1	—
IOA1	0	0	1	—	—
IOA0	0	1	—	—	—

Pin	Pin Functions and Selection Method
$PA_5/TP_5/TIOCB_1/A_{22}$	Bit PWM1 in TMDR, bits IOB2 to IOB0 in TIOR1, bit NDER5 in NDERA, bit A22E in BRCR, and bit PA_5DDR select the pin function as follows.

A22E	1				0
16-bit timer channel 1 settings	(1) in table below	(2) in table below			—
PA_5DDR	—	0	1	1	—
NDER5	—	—	0	1	—
Pin function	$TIOCB_1$ output	PA_5 input	PA_5 output	TP_5 output	A_{22} output
		$TIOCB_1$ input*			

Note: * $TIOCB_1$ input when IOB2 = 1 and PWM1 = 0.

16-bit timer channel 1 settings	(2)	(1)		(2)
IOB2	0			1
IOB1	0	0	1	—
IOB0	0	1	—	—

$PA_4/TP_4/TIOCA_1/A_{23}$ Bit PWM1 in TMDR, bits IOA2 to IOA0 in TIOR1, bit NDER4 in NDERA, bit A23E in BRCR, and bit PA_4DDR select the pin function as follows.

A23E	1				0
16-bit timer channel 1 settings	(1) in table below	(2) in table below			—
PA_4DDR	—	0	1	1	—
NDER4	—	—	0	1	—
Pin function	$TIOCA_1$ output	PA_4 input	PA_4 output	TP_4 output	A_{23} output
		$TIOCA_1$ input*			

Note: * $TIOCA_1$ input when IOA2 = 1.

16-bit timer channel 1 settings	(2)	(1)		(2)	(1)
PWM1	0				1
IOA2	0			1	—
IOA1	0	0	1	—	—
IOA0	0	1	—	—	—

Table 7.14 Port A Pin Functions (Modes 1 to 4)

Pin	Pin Functions and Selection Method
PA_3/TP_3/ $TIOCB_0$/ TCLKD	Bit PWM0 in TMDR, bits IOB2 to IOB0 in TIOR0, bits TPSC2 to TPSC0 in 16TCR2 to 16TCR0 of the 16-bit timer, bits CKS2 to CKS0 in 8TCR2 of the 8-bit timer, bit NDER3 in NDERA, and bit PA_3DDR select the pin function as follows.

16-bit timer channel 0 settings	(1) in table below	(2) in table below		
PA_3DDR	—	0	1	1
NDER3	—	—	0	1
Pin function	$TIOCB_0$ output	PA_3 input	PA_3 output	TP_3 output
		$TIOCB_0$ input*1		
	TCLKD input*2			

Notes: 1. $TIOCB_0$ input when IOB2 = 1 and PWM0 = 0.
2. TCLKD input when TPSC2 = TPSC1 = TPSC0 = 1 in any of 16TCR2 to 16TCR0, or bits CKS2 to CKS0 in 8TCR2 are as shown in (3) in the table below.

16-bit timer channel 0 settings	(2)	(1)		(2)
IOB2	0			1
IOB1	0	0	1	—
IOB0	0	1	—	—

8-bit timer channel 2 settings	(4)		(3)	
CKS2	0	1		
CKS1	—	0		1
CKS0	—	0	1	—

Pin	Pin Functions and Selection Method
$PA_2/TP_2/TIOCA_0/TCLKC$	Bit PWM0 in TMDR, bits IOA2 to IOA0 in TIOR0, bits TPSC2 to TPSC0 in 16TCR2 to 16TCR0 of the 16-bit timer, bits CKS2 to CKS0 in 8TCR0 of the 8-bit timer, bit NDER2 in NDERA, and bit PA_2DDR select the pin function as follows.

16-bit timer channel 0 settings	(1) in table below	(2) in table below		
PA_2DDR	—	0	1	1
NDER2	—	—	0	1
Pin function	$TIOCA_0$ output	PA_2 input	PA_2 output	TP_2 output
		$TIOCA_0$ input*[1]		
	TCLKC input*[2]			

Notes: 1. $TIOCA_0$ input when IOA2 = 1.
2. TCLKC input when TPSC2 = TPSC1 = 1 and TPSC0 = 0 in any of 16TCR2 to 16TCR0, or bits CKS2 to CKS0 in 8TCR0 are as shown in (3) in the table below.

16-bit timer channel 0 settings	(2)	(1)		(2)	(1)
PWM0	0				1
IOA2	0			1	—
IOA1	0	0	1	—	—
IOA0	0	1	—	—	—

8-bit timer channel 0 settings	(4)		(3)	
CKS2	0	1		
CKS1	—	0		1
CKS0	—	0	1	—

Pin	Pin Functions and Selection Method
$PA_1/TP_1/$ TCLKB	Bit MDF in TMDR, bits TPSC2 to TPSC0 in 16TCR2 to 16TCR0 of the 16-bit timer, bits CKS2 to CKS0 in 8TCR3 of the 8-bit timer, bit NDER1 in NDERA, and bit PA_1DDR select the pin function as follows.

PA_1DDR	0	1	1
NDER1	—	0	1
Pin function	PA_1 input	PA_1 output	TP_1 output
	TCLKB input*		

Note: * TCLKB input when MDF = 1 in TMDR, or TPSC2 = 1, TPSC1 = 0, and TPSC0 = 1 in any of 16TCR2 to 16TCR0, or bits CKS2 to CKS0 in 8TCR3 are as shown in (1) in the table below.

8-bit timer channel 3 settings	(2)		(1)	
CKS2	0	1		
CKS1	—	0		1
CKS0	—	0	1	—

$PA_0/TP_0/$ TCLKA	Bit MDF in TMDR, bits TPSC2 to TPSC0 in 16TCR2 to 16TCR0 of the 16-bit timer, bits CKS2 to CKS0 in 8TCR1 of the 8-bit timer, bit NDER0 in NDERA, and bit PA_0DDR select the pin function as follows.

PA_0DDR	0	1	
NDER0	—	0	1
Pin function	PA_0 input	PA_0 output	TP_0 output
	TCLKA input*		

Note: * TCLKA input when MDF = 1 in TMDR, or TPSC2 = 1 and TPSC1 = 0, and TPSC0 = 0 in any of 16TCR2 to 16TCR0, or bits CKS2 to CKS0 in 8TCR1 are as shown in (1) in the table below.

8-bit timer channel 1 settings	(2)		(1)	
CKS2	0	1		
CKS1	—	0		1
CKS0	—	0	1	—

7.8 Port B

7.8.1 Overview

Port B is an 8-bit input/output port that is also used for output (TP_{15} to TP_8) from the programmable timing pattern controller (TPC), input/output ($TMIO_3$, TMO_2, $TMIO_1$, TMO_0) by the 8-bit timer, and $\overline{CS}_7$ to $\overline{CS}_4$ output. See table 7.16 for the selection of pin functions. A reset or hardware standby transition leaves port B as an input/output port.

For output of $\overline{CS}_7$ to $\overline{CS}_4$ in modes 1 to 4, see section 6.3.4, Chip Select Signals. Pins not assigned to any of these functions are available for generic input/output. Figure 7.7 shows the pin configuration of port B.

Pins in port B can drive one TTL load and a 30-pF capacitive load. They can also drive darlington transistor pair.

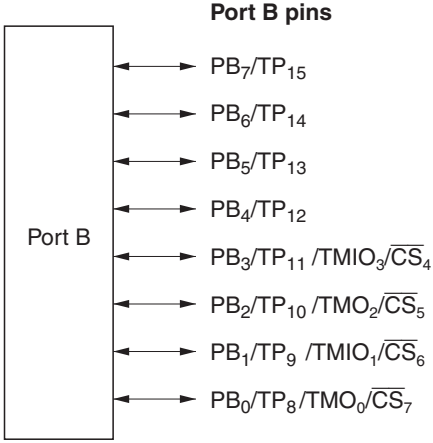

Pin functions in modes 1 to 4

PB_7 (input/output)/TP_{15} (output)

PB_6 (input/output)/TP_{14} (output)

PB_5 (input/output)/TP_{13} (output)

PB_4 (input/output)/TP_{12} (output)

PB_3 (input/output)/TP_{11} (output) /$TMIO_3$ (input/output) /$\overline{CS}_4$ (output)

PB_2 (input/output)/TP_{10} (output) /TMO_2 (output) /$\overline{CS}_5$ (output)

PB_1 (input/output)/TP_9 (output) /$TMIO_1$ (input/output) /$\overline{CS}_6$ (output)

PB_0 (input/output)/TP_8 (output) /TMO_0 (output) /$\overline{CS}_7$ (output)

Figure 7.7 Port B Pin Configuration

7.8.2 Register Descriptions

Table 7.15 summarizes the registers of port B.

Table 7.15 Port B Registers

Address*	Name	Abbreviation	R/W	Initial Value
H'EE00A	Port B data direction register	PBDDR	W	H'00
H'FFFDA	Port B data register	PBDR	R/W	H'00

Note: * Lower 20 bits of the address in advanced mode.

Port B Data Direction Register (PBDDR): PBDDR is an 8-bit write-only register that can select input or output for each pin in port B. When pins are used for TPC output, the corresponding PBDDR bits must also be set.

Bit	7	6	5	4	3	2	1	0
	PB_7DDR	PB_6DDR	PB_5DDR	PB_4DDR	PB_3DDR	PB_2DDR	PB_1DDR	PB_0DDR
Initial value	0	0	0	0	0	0	0	0
Read/Write	W	W	W	W	W	W	W	W

Port B data direction 7 to 0
These bits select input or output for port B pins

For the method of selecting the pin functions, see table 7.16.

When port B functions as an input/output port, a pin in port B becomes an output port if the corresponding PBDDR bit is set to 1, and an input port if this bit is cleared to 0.

PBDDR is a write-only register. Its value cannot be read. All bits return 1 when read.

PBDDR is initialized to H'00 by a reset and in hardware standby mode. In software standby mode it retains its previous setting. Therefore, if a transition is made to software standby mode while port B is functioning as an input/output port and a PBDDR bit is set to 1, the corresponding pin maintains its output state.

Port B Data Register (PBDR): PBDR is an 8-bit readable/writable register that stores output data for pins port B. When port B functions as an output port, the value of this register is output. When a bit in PBDDR is set to 1, if port B is read the value of the corresponding PBDR bit is returned. When a bit in PBDDR is cleared to 0, if port B is read the corresponding pin logic level is read.

Bit	7	6	5	4	3	2	1	0
	PB_7	PB_6	PB_5	PB_4	PB_3	PB_2	PB_1	PB_0
Initial value	0	0	0	0	0	0	0	0
Read/Write	R/W	R/W	R/W	R/W	R/W	R/W	R/W	R/W

Port B data 7 to 0
These bits store data for port B pins

PBDR is initialized to H'00 by a reset and in hardware standby mode. In software standby mode it retains its previous setting.

Table 7.16 Port B Pin Functions (Modes 1 to 4)

Pin	Pin Functions and Selection Method			
PB_7/TP_{15}	Bit NDER15 in NDERB and bit PB_7DDR select the pin function as follows.			
	PB_7DDR	0	1	1
	NDER15	—	0	1
	Pin function	PB_7 input	PB_7 output	TP_{15} output
PB_6/TP_{14}	Bit NDER14 in NDERB and bit PB_6DDR select the pin function as follows.			
	PB_6DDR	0	1	1
	NDER14	—	0	1
	Pin function	PB_6 input	PB_6 output	TP_{14} output
PB_5/TP_{13}	Bit NDER13 in NDERB and bit PB_5DDR select the pin function as follows.			
	PB_5DDR	0	1	1
	NDER13	—	0	1
	Pin function	PB_5 input	PB_5 output	TP_{13} output
PB_4/TP_{12}	Bit NDER12 in NDERB and bit PB_4DDR select the pin function as follows.			
	PB_4DDR	0	1	1
	NDER12	—	0	1
	Pin function	PB_4 input	PB_4 output	TP_{12} output

$PB_3/TP_{11}/TMIO_3/\overline{CS}_4$	Bits OIS3/2 and OS1/0 in 8TCSR3, bits CCLR1/0 in 8TCR3, bit CS4E in CSCR, bit NDER11 in NDERB, and bit PB_3DDR select the pin function as follows.				
	OIS3/2 and OS1/0	All 0			Not all 0
	CS4E	0		1	—
	PB_3DDR	0	1	1	—	—
	NDER11	—	0	1	—	—
	Pin function	PB_3 input	PB_3 output	TP_{11} output	$\overline{CS}_4$ output	$TMIO_3$ output
		$TMIO_3$ input*				

Note: * $TMIO_3$ input when bit ICE = 1 in 8TCSR3.

Pin	Pin Functions and Selection Method
$PB_2/TP_{10}/TMO_2/\overline{CS}_5$	Bits OIS3/2 and OS1/0 in 8TCSR2, bit CS5E in CSCR, bit NDER10 in NDERB, and bit PB_2DDR select the pin function as follows.

OIS3/2 and OS1/0	All 0				Not all 0
CS5E	0			1	—
PB_2DDR	0	1	1	—	—
NDER10	—	0	1	—	—
Pin function	PB_2 input	PB_2 output	TP_{10} output	$\overline{CS}_5$ output	$TMIO_2$ output

$PB_1/TP_9/TMIO_1/\overline{CS}_6$	Bits OIS3/2 and OS1/0 in 8TCSR1, bits CCLR1/0 in 8TCR1, bit CS6E in CSCR, bit NDER9 in NDERB, and bit PB_1DDR select the pin function as follows.

OIS3/2 and OS1/0	All 0				Not all 0
CS6E	0			1	—
PB_1DDR	0	1	1	—	—
NDER9	—	0	1	—	—
Pin function	PB_1 input	PB_1 output	TP_9 output	$\overline{CS}_6$ output	$TMIO_1$ output
	$TMIO_1$ input*				

Note: * $TMIO_1$ input when bit ICE = 1 in 8TCSR1.

$PB_0/TP_8/TMO_0/\overline{CS}_7$	Bits OIS3/2 and OS1/0 in 8TCSR0, bit CS7E in CSCR, bit NDER8 in NDERB, and bit PB_0DDR select the pin function as follows.

OIS3/2 and OS1/0	All 0				Not all 0
CS7E	0			1	—
PB_0DDR	0	1	1	—	—
NDER8	—	0	1	—	—
Pin function	PB_0 input	PB_0 output	TP_8 output	$\overline{CS}_7$ output	TMO_0 output

Section 8 16-Bit Timer

8.1 Overview

The H8/3008 has built-in 16-bit timer module with three 16-bit counter channels.

8.1.1 Features

16-bit timer features are listed below.

- Capability to process up to 6 pulse outputs or 6 pulse inputs
- Six general registers (GRs, two per channel) with independently-assignable output compare or input capture functions
- Selection of eight counter clock sources for each channel:

  Internal clocks: ϕ, ϕ/2, ϕ/4, ϕ/8

  External clocks: TCLKA, TCLKB, TCLKC, TCLKD
- Five operating modes selectable in all channels:
  - Waveform output by compare match

    Selection of 0 output, 1 output, or toggle output (only 0 or 1 output in channel 2)
  - Input capture function

    Rising edge, falling edge, or both edges (selectable)
  - Counter clearing function

    Counters can be cleared by compare match or input capture
  - Synchronization

    Two or more timer counters (16TCNTs) can be preset simultaneously, or cleared simultaneously by compare match or input capture. Counter synchronization enables synchronous register input and output.
  - PWM mode

    PWM output can be provided with an arbitrary duty cycle. With synchronization, up to three-phase PWM output is possible
- Phase counting mode selectable in channel 2

  Two-phase encoder output can be counted automatically.
- High-speed access via internal 16-bit bus

  The 16TCNTs and GRs can be accessed at high speed via a 16-bit bus.
- Any initial timer output value can be set
- Nine interrupt sources

Each channel has two compare match/input capture interrupts and an overflow interrupt. All interrupts can be requested independently.

- Output triggering of programmable timing pattern controller (TPC)

  Compare match/input capture signals from channels 0 to 2 can be used as TPC output triggers.

Table 8.1 summarizes the 16-bit timer functions.

Table 8.1 16-bit timer Functions

Item		Channel 0	Channel 1	Channel 2
Clock sources		Internal clocks: ϕ, ϕ/2, ϕ/4, ϕ/8 External clocks: TCLKA, TCLKB, TCLKC, TCLKD, selectable independently		
General registers (output compare/input capture registers)		GRA0, GRB0	GRA1, GRB1	GRA2, GRB2
Input/output pins		$TIOCA_0$, $TIOCB_0$	$TIOCA_1$, $TIOCB_1$	$TIOCA_2$, $TIOCB_2$
Counter clearing function		GRA0/GRB0 compare match or input capture	GRA1/GRB1 compare match or input capture	GRA2/GRB2 compare match or input capture
Initial output value setting function		Available	Available	Available
Compare match output	0	Available	Available	Available
	1	Available	Available	Available
	Toggle	Available	Available	Not available
Input capture function		Available	Available	Available
Synchronization		Available	Available	Available
PWM mode		Available	Available	Available
Phase counting mode		Not available	Not available	Available
Interrupt sources		Three sources • Compare match/input capture A0 • Compare match/input capture B0 • Overflow	Three sources • Compare match/input capture A1 • Compare match/input capture B1 • Overflow	Three sources • Compare match/input capture A2 • Compare match/input capture B2 • Overflow

8.1.2 Block Diagrams

16-bit timer Block Diagram (Overall): Figure 8.1 is a block diagram of the 16-bit timer.

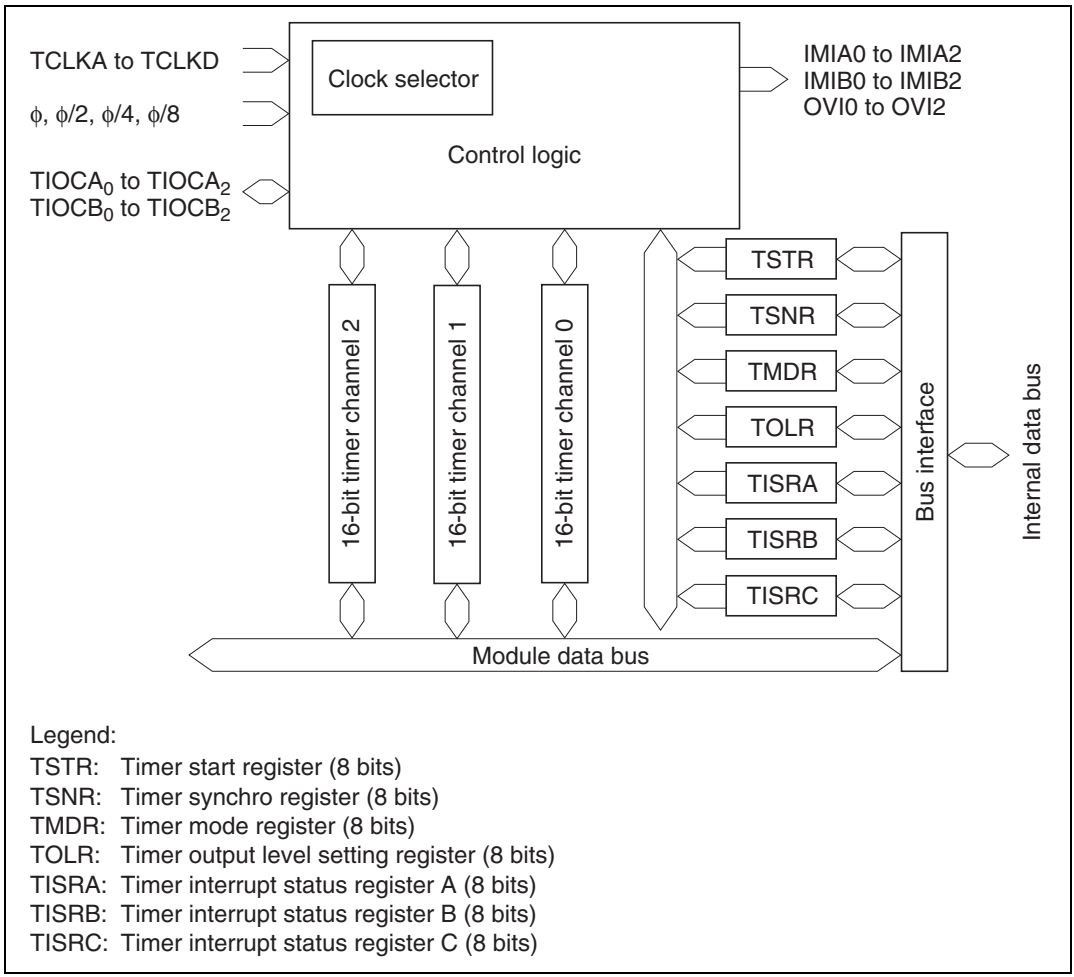

Figure 8.1 16-bit timer Block Diagram (Overall)

Block Diagram of Channels 0 and 1: 16-bit timer channels 0 and 1 are functionally identical. Both have the structure shown in figure 8.2.

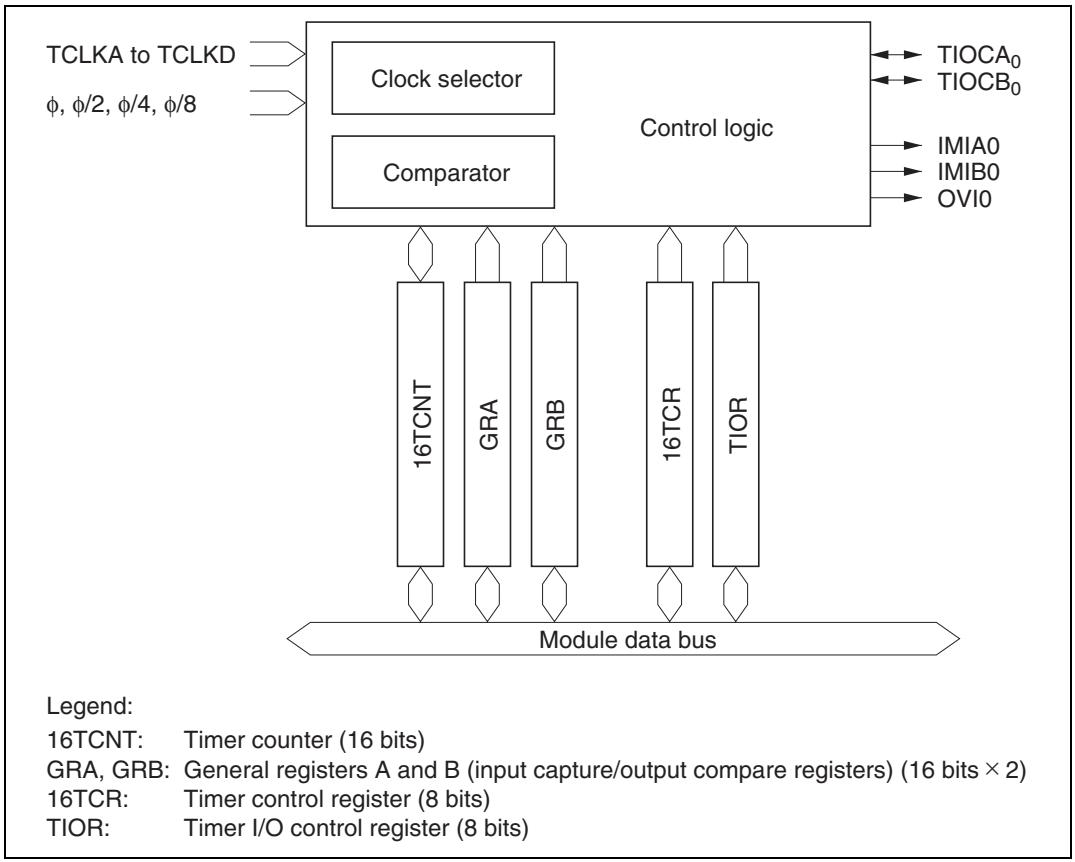

Figure 8.2 Block Diagram of Channels 0 and 1

Block Diagram of Channel 2: Figure 8.3 is a block diagram of channel 2

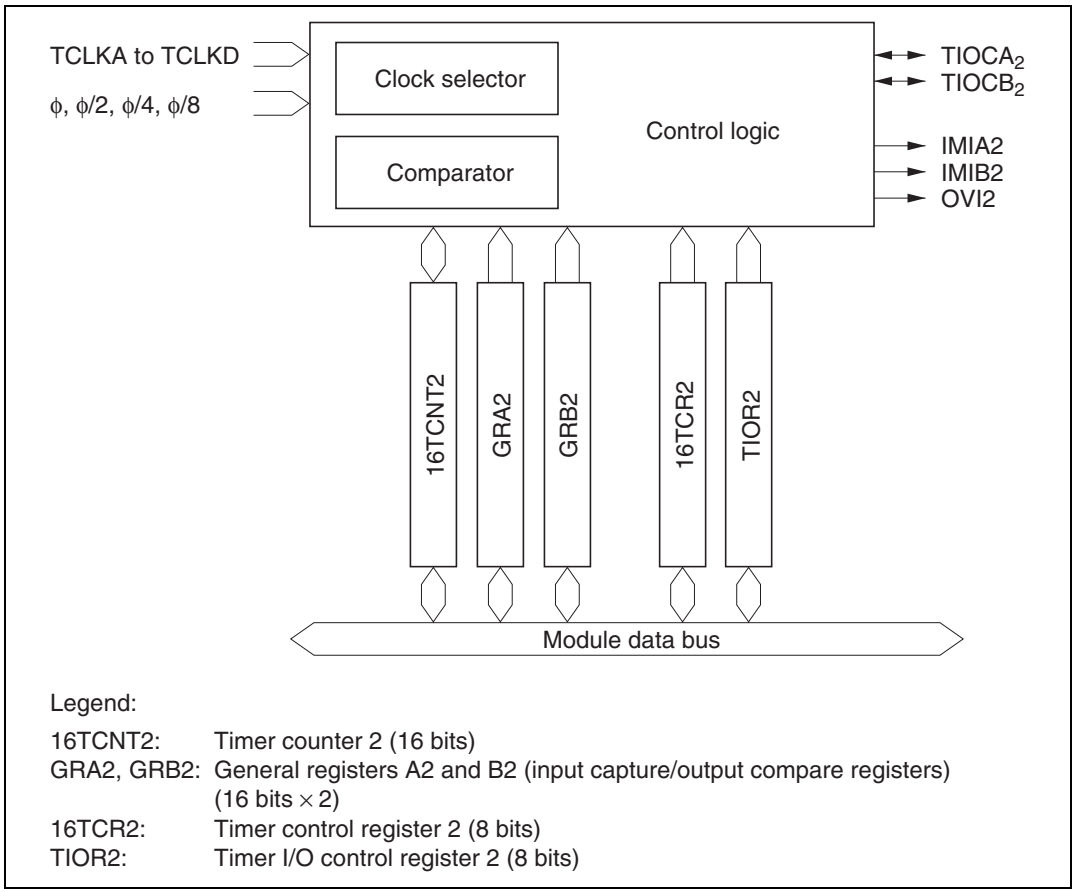

Figure 8.3 Block Diagram of Channel 2

8.1.3 Pin Configuration

Table 8.2 summarizes the 16-bit timer pins.

Table 8.2 16-bit timer Pins

Channel	Name	Abbre-viation	Input/ Output	Function
Common	Clock input A	TCLKA	Input	External clock A input pin (phase-A input pin in phase counting mode)
	Clock input B	TCLKB	Input	External clock B input pin (phase-B input pin in phase counting mode)
	Clock input C	TCLKC	Input	External clock C input pin
	Clock input D	TCLKD	Input	External clock D input pin
0	Input capture/output compare A0	$TIOCA_0$	Input/ output	GRA0 output compare or input capture pin PWM output pin in PWM mode
	Input capture/output compare B0	$TIOCB_0$	Input/ output	GRB0 output compare or input capture pin
1	Input capture/output compare A1	$TIOCA_1$	Input/ output	GRA1 output compare or input capture pin PWM output pin in PWM mode
	Input capture/output compare B1	$TIOCB_1$	Input/ output	GRB1 output compare or input capture pin
2	Input capture/output compare A2	$TIOCA_2$	Input/ output	GRA2 output compare or input capture pin PWM output pin in PWM mode
	Input capture/output compare B2	$TIOCB_2$	Input/ output	GRB2 output compare or input capture pin

8.1.4 Register Configuration

Table 8.3 summarizes the 16-bit timer registers.

Table 8.3 16-bit timer Registers

Channel	Address*1	Name	Abbre-viation	R/W	Initial Value
Common	H'FFF60	Timer start register	TSTR	R/W	H'F8
	H'FFF61	Timer synchro register	TSNC	R/W	H'F8
	H'FFF62	Timer mode register	TMDR	R/W	H'98
	H'FFF63	Timer output level setting register	TOLR	W	H'C0
	H'FFF64	Timer interrupt status register A	TISRA	R/(W)*2	H'88
	H'FFF65	Timer interrupt status register B	TISRB	R/(W)*2	H'88
	H'FFF66	Timer interrupt status register C	TISRC	R/(W)*2	H'88
0	H'FFF68	Timer control register 0	16TCR0	R/W	H'80
	H'FFF69	Timer I/O control register 0	TIOR0	R/W	H'88
	H'FFF6A	Timer counter 0H	16TCNT0H	R/W	H'00
	H'FFF6B	Timer counter 0L	16TCNT0L	R/W	H'00
	H'FFF6C	General register A0H	GRA0H	R/W	H'FF
	H'FFF6D	General register A0L	GRA0L	R/W	H'FF
	H'FFF6E	General register B0H	GRB0H	R/W	H'FF
	H'FFF6F	General register B0L	GRB0L	R/W	H'FF
1	H'FFF70	Timer control register 1	16TCR1	R/W	H'80
	H'FFF71	Timer I/O control register 1	TIOR1	R/W	H'88
	H'FFF72	Timer counter 1H	16TCNT1H	R/W	H'00
	H'FFF73	Timer counter 1L	16TCNT1L	R/W	H'00
	H'FFF74	General register A1H	GRA1H	R/W	H'FF
	H'FFF75	General register A1L	GRA1L	R/W	H'FF
	H'FFF76	General register B1H	GRB1H	R/W	H'FF
	H'FFF77	General register B1L	GRB1L	R/W	H'FF

Channel	Address*1	Name	Abbre-viation	R/W	Initial Value
2	H'FFF78	Timer control register 2	16TCR2	R/W	H'80
	H'FFF79	Timer I/O control register 2	TIOR2	R/W	H'88
	H'FFF7A	Timer counter 2H	16TCNT2H	R/W	H'00
	H'FFF7B	Timer counter 2L	16TCNT2L	R/W	H'00
	H'FFF7C	General register A2H	GRA2H	R/W	H'FF
	H'FFF7D	General register A2L	GRA2L	R/W	H'FF
	H'FFF7E	General register B2H	GRB2H	R/W	H'FF
	H'FFF7F	General register B2L	GRB2L	R/W	H'FF

Notes: 1. The lower 20 bits of the address in advanced mode are indicated.
2. Only 0 can be written in bits 3 to 0, to clear the flags.

8.2 Register Descriptions

8.2.1 Timer Start Register (TSTR)

TSTR is an 8-bit readable/writable register that starts and stops the timer counter (16TCNT) in channels 0 to 2.

Bit	7	6	5	4	3	2	1	0
	—	—	—	—	—	STR2	STR1	STR0
Initial value	1	1	1	1	1	0	0	0
Read/Write	—	—	—	—	—	R/W	R/W	R/W

Reserved bits

Counter start 2 to 0
These bits start and stop 16TCNT2 to 16TCNT0

TSTR is initialized to H'F8 by a reset and in standby mode.

Bits 7 to 3—Reserved: These bits cannot be modified and are always read as 1.

Bit 2—Counter Start 2 (STR2): Starts and stops timer counter 2 (16TCNT2).

Bit 2 STR2	Description	
0	16TCNT2 is halted	(Initial value)
1	16TCNT2 is counting	

Bit 1—Counter Start 1 (STR1): Starts and stops timer counter 1 (16TCNT1).

Bit 1 STR1	Description	
0	16TCNT1 is halted	(Initial value)
1	16TCNT1 is counting	

Bit 0—Counter Start 0 (STR0): Starts and stops timer counter 0 (16TCNT0).

Bit 0 STR0	Description	
0	16TCNT0 is halted	(Initial value)
1	16TCNT0 is counting	

8.2.2 Timer Synchro Register (TSNC)

TSNC is an 8-bit readable/writable register that selects whether channels 0 to 2 operate independently or synchronously. Channels are synchronized by setting the corresponding bits to 1.

Bit	7	6	5	4	3	2	1	0
	—	—	—	—	—	SYNC2	SYNC1	SYNC0
Initial value	1	1	1	1	1	0	0	0
Read/Write	—	—	—	—	—	R/W	R/W	R/W

Reserved bits

Timer sync 2 to 0
These bits synchronize channels 2 to 0

TSNC is initialized to H'F8 by a reset and in standby mode.

Bits 7 to 3—Reserved: These bits cannot be modified and are always read as 1.

Bit 2—Timer Sync 2 (SYNC2): Selects whether channel 2 operates independently or synchronously.

Bit 2 SYNC2	Description	
0	Channel 2's timer counter (16TCNT2) operates independently 16TCNT2 is preset and cleared independently of other channels	(Initial value)
1	Channel 2 operates synchronously 16TCNT2 can be synchronously preset and cleared	

Bit 1—Timer Sync 1 (SYNC1): Selects whether channel 1 operates independently or synchronously.

Bit 1 SYNC1	Description	
0	Channel 1's timer counter (16TCNT1) operates independently 16TCNT1 is preset and cleared independently of other channels	(Initial value)
1	Channel 1 operates synchronously 16TCNT1 can be synchronously preset and cleared	

Bit 0—Timer Sync 0 (SYNC0): Selects whether channel 0 operates independently or synchronously.

Bit 0 SYNC0	Description	
0	Channel 0's timer counter (16TCNT0) operates independently 16TCNT0 is preset and cleared independently of other channels	(Initial value)
1	Channel 0 operates synchronously 16TCNT0 can be synchronously preset and cleared	

8.2.3 Timer Mode Register (TMDR)

TMDR is an 8-bit readable/writable register that selects PWM mode for channels 0 to 2. It also selects phase counting mode and the overflow flag (OVF) setting conditions for channel 2.

Bit	7	6	5	4	3	2	1	0
	—	MDF	FDIR	—	—	PWM2	PWM1	PWM0
Initial value	1	0	0	1	1	0	0	0
Read/Write	—	R/W	R/W	—	—	R/W	R/W	R/W

PWM mode 2 to 0
These bits select PWM mode for channels 2 to 0

Reserved bit

Flag direction
Selects the setting condition for the overflow flag (OVF) in TISRC

Phase counting mode flag
Selects phase counting mode for channel 2

Reserved bit

TMDR is initialized to H'98 by a reset and in standby mode.

Bit 7—Reserved: This bit cannot be modified and is always read as 1.

Bit 6—Phase Counting Mode Flag (MDF): Selects whether channel 2 operates normally or in phase counting mode.

Bit 6 MDF	Description	
0	Channel 2 operates normally	(Initial value)
1	Channel 2 operates in phase counting mode	

When MDF is set to 1 to select phase counting mode, 16TCNT2 operates as an up/down-counter and pins TCLKA and TCLKB become counter clock input pins. 16TCNT2 counts both rising and falling edges of TCLKA and TCLKB, and counts up or down as follows.

Counting Direction	Down-Counting				Up-Counting			
TCLKA pin	↑	High	↓	Low	Low	↑	High	↓
TCLKB pin	Low	↑	High	↓	↑	High	↓	Low

In phase counting mode, external clock edge selection by bits CKEG1 and CKEG0 in 16TCR2 and counter clock selection by bits TPSC2 to TPSC0 are invalid, and the above phase counting mode operations take precedence.

The counter clearing condition selected by the CCLR1 and CCLR0 bits in 16TCR2 and the compare match/input capture settings and interrupt functions of TIOR2, TISRA, TISRB, TISRC remain effective in phase counting mode.

Bit 5—Flag Direction (FDIR): Designates the setting condition for the OVF flag in TISRC. The FDIR designation is valid in all modes in channel 2.

Bit 5 FDIR	Description	
0	OVF is set to 1 in TISRC when 16TCNT2 overflows or underflows	(Initial value)
1	OVF is set to 1 in TISRC when 16TCNT2 overflows	

Bits 4 and 3—Reserved: These bits cannot be modified and are always read as 1.

Bit 2—PWM Mode 2 (PWM2): Selects whether channel 2 operates normally or in PWM mode.

Bit 2 PWM2	Description	
0	Channel 2 operates normally	(Initial value)
1	Channel 2 operates in PWM mode	

When bit PWM2 is set to 1 to select PWM mode, pin $TIOCA_2$ becomes a PWM output pin. The output goes to 1 at compare match with GRA2, and to 0 at compare match with GRB2.

Bit 1—PWM Mode 1 (PWM1): Selects whether channel 1 operates normally or in PWM mode.

Bit 1 PWM1	Description	
0	Channel 1 operates normally	(Initial value)
1	Channel 1 operates in PWM mode	

When bit PWM1 is set to 1 to select PWM mode, pin $TIOCA_1$ becomes a PWM output pin. The output goes to 1 at compare match with GRA1, and to 0 at compare match with GRB1.

Bit 0—PWM Mode 0 (PWM0): Selects whether channel 0 operates normally or in PWM mode.

Bit 0 PWM0	Description	
0	Channel 0 operates normally	(Initial value)
1	Channel 0 operates in PWM mode	

When bit PWM0 is set to 1 to select PWM mode, pin $TIOCA_0$ becomes a PWM output pin. The output goes to 1 at compare match with GRA0, and to 0 at compare match with GRB0.

8.2.4 Timer Interrupt Status Register A (TISRA)

TISRA is an 8-bit readable/writable register that indicates GRA compare match or input capture and enables or disables GRA compare match and input capture interrupt requests.

Bit	7	6	5	4	3	2	1	0
	—	IMIEA2	IMIEA1	IMIEA0	—	IMFA2	IMFA1	IMFA0
Initial value	1	0	0	0	1	0	0	0
Read/Write	—	R/W	R/W	R/W	—	R/(W)*	R/(W)*	R/(W)*

Input capture/compare match flags A2 to A0
Status flags indicating GRA compare match or input capture

Reserved bit

Input capture/compare match interrupt enable A2 to A0
These bits enable or disable interrupts by the IMFA flags

Reserved bit

Note: * Only 0 can be written, to clear the flag.

TISRA is initialized to H'88 by a reset and in standby mode.

Bit 7—Reserved: This bit cannot be modified and is always read as 1.

Bit 6—Input Capture/Compare Match Interrupt Enable A2 (IMIEA2): Enables or disables the interrupt requested by the IMFA2 when IMFA2 flag is set to 1.

Bit 6 IMIEA2	Description	
0	IMIA2 interrupt requested by IMFA2 flag is disabled	(Initial value)
1	IMIA2 interrupt requested by IMFA2 flag is enabled	

Bit 5—Input Capture/Compare Match Interrupt Enable A1 (IMIEA1): Enables or disables the interrupt requested by the IMFA1 flag when IMFA1 is set to 1.

Bit 5 IMIEA1	Description	
0	IMIA1 interrupt requested by IMFA1 flag is disabled	(Initial value)
1	IMIA1 interrupt requested by IMFA1 flag is enabled	

Bit 4—Input Capture/Compare Match Interrupt Enable A0 (IMIEA0): Enables or disables the interrupt requested by the IMFA0 flag when IMFA0 is set to 1.

Bit 4 IMIEA0	Description	
0	IMIA0 interrupt requested by IMFA0 flag is disabled	(Initial value)
1	IMIA0 interrupt requested by IMFA0 flag is enabled	

Bit 3—Reserved: This bit cannot be modified and is always read as 1.

Bit 2—Input Capture/Compare Match Flag A2 (IMFA2): This status flag indicates GRA2 compare match or input capture events.

Bit 2 IMFA2	Description	
0	[Clearing condition] Read IMFA2 flag when IMFA2 = 1, then write 0 in IMFA2 flag	(Initial value)
1	[Setting conditions] • 16TCNT2 = GRA2 when GRA2 functions as an output compare register • 16TCNT2 value is transferred to GRA2 by an input capture signal when GRA2 functions as an input capture register	

Bit 1—Input Capture/Compare Match Flag A1 (IMFA1): This status flag indicates GRA1 compare match or input capture events.

Bit 1 IMFA1	Description
0	[Clearing condition] (Initial value) Read IMFA1 flag when IMFA1 = 1, then write 0 in IMFA1 flag
1	[Setting conditions] • 16TCNT1 = GRA1 when GRA1 functions as an output compare register • 16TCNT1 value is transferred to GRA1 by an input capture signal when GRA1 functions as an input capture register

Bit 0—Input Capture/Compare Match Flag A0 (IMFA0): This status flag indicates GRA0 compare match or input capture events.

Bit 0 IMFA0	Description
0	[Clearing condition] (Initial value) Read IMFA0 flag when IMFA0 = 1, then write 0 in IMFA0 flag
1	[Setting conditions] • 16TCNT0 = GRA0 when GRA0 functions as an output compare register • 16TCNT0 value is transferred to GRA0 by an input capture signal when GRA0 functions as an input capture register

8.2.5 Timer Interrupt Status Register B (TISRB)

TISRB is an 8-bit readable/writable register that indicates GRB compare match or input capture and enables or disables GRB compare match and input capture interrupt requests.

Bit	7	6	5	4	3	2	1	0
	—	IMIEB2	IMIEB1	IMIEB0	—	IMFB2	IMFB1	IMFB0
Initial value	1	0	0	0	1	0	0	0
Read/Write	—	R/W	R/W	R/W	—	R/(W)*	R/(W)*	R/(W)*

Input capture/compare match flags B2 to B0
Status flags indicating GRB compare match or input capture

Reserved bit

Input capture/compare match interrupt enable B2 to B0
These bits enable or disable interrupts by the IMFB flags

Reserved bit

Note: * Only 0 can be written, to clear the flag.

TISRB is initialized to H'88 by a reset and in standby mode.

Bit 7—Reserved: This bit cannot be modified and is always read as 1.

Bit 6—Input Capture/Compare Match Interrupt Enable B2 (IMIEB2): Enables or disables the interrupt requested by the IMFB2 when IMFB2 flag is set to 1.

Bit 6 IMIEB2	Description	
0	IMIB2 interrupt requested by IMFB2 flag is disabled	(Initial value)
1	IMIB2 interrupt requested by IMFB2 flag is enabled	

Bit 5—Input Capture/Compare Match Interrupt Enable B1 (IMIEB1): Enables or disables the interrupt requested by the IMFB1 when IMFB1 flag is set to 1.

Bit 5 IMIEB1	Description	
0	IMIB1 interrupt requested by IMFB1 flag is disabled	(Initial value)
1	IMIB1 interrupt requested by IMFB1 flag is enabled	

Bit 4—Input Capture/Compare Match Interrupt Enable B0 (IMIEB0): Enables or disables the interrupt requested by the IMFB0 when IMFB0 flag is set to 1.

Bit 4 IMIEB0	Description	
0	IMIB0 interrupt requested by IMFB0 flag is disabled	(Initial value)
1	IMIB0 interrupt requested by IMFB0 flag is enabled	

Bit 3—Reserved: This bit cannot be modified and is always read as 1.

Bit 2—Input Capture/Compare Match Flag B2 (IMFB2): This status flag indicates GRB2 compare match or input capture events.

Bit 2 IMFB2	Description	
0	[Clearing condition] Read IMFB2 flag when IMFB2 = 1, then write 0 in IMFB2 flag	(Initial value)
1	[Setting conditions] • 16TCNT2 = GRB2 when GRB2 functions as an output compare register • 16TCNT2 value is transferred to GRB2 by an input capture signal when GRB2 functions as an input capture register	

Bit 1—Input Capture/Compare Match Flag B1 (IMFB1): This status flag indicates GRB1 compare match or input capture events.

Bit 1 IMFB1	Description
0	[Clearing condition] (Initial value) Read IMFB1 flag when IMFB1 = 1, then write 0 in IMFB1 flag
1	[Setting conditions] • 16TCNT1 = GRB1 when GRB1 functions as an output compare register • 16TCNT1 value is transferred to GRB1 by an input capture signal when GRB1 functions as an input capture register

Bit 0—Input Capture/Compare Match Flag B0 (IMFB0): This status flag indicates GRB0 compare match or input capture events.

Bit 0 IMFB0	Description
0	[Clearing condition] (Initial value) Read IMFB0 flag when IMFB0 = 1, then write 0 in IMFB0 flag
1	[Setting conditions] • 16TCNT0 = GRB0 when GRB0 functions as an output compare register • 16TCNT0 value is transferred to GRB0 by an input capture signal when GRB0 functions as an input capture register

8.2.6 Timer Interrupt Status Register C (TISRC)

TISRC is an 8-bit readable/writable register that indicates 16TCNT overflow or underflow and enables or disables overflow interrupt requests.

Bit	7	6	5	4	3	2	1	0
	—	OVIE2	OVIE1	OVIE0	—	OVF2	OVF1	OVF0
Initial value	1	0	0	0	1	0	0	0
Read/Write	—	R/W	R/W	R/W	—	R/(W)*	R/(W)*	R/(W)*

Overflow flags 2 to 0
Status flags indicating interrupts by OVF flags

Reserved bit

Overflow interrupt enable 2 to 0
These bits enable or disable interrupts by the OVF flags

Reserved bit

Note: * Only 0 can be written, to clear the flag.

TISRC is initialized to H'88 by a reset and in standby mode.

Bit 7—Reserved: This bit cannot be modified and is always read as 1.

Bit 6—Overflow Interrupt Enable 2 (OVIE2): Enables or disables the interrupt requested by the OVF2 when OVF2 flag is set to 1.

Bit 6 OVIE2	Description	
0	OVI2 interrupt requested by OVF2 flag is disabled	(Initial value)
1	OVI2 interrupt requested by OVF2 flag is enabled	

Bit 5—Overflow Interrupt Enable 1 (OVIE1): Enables or disables the interrupt requested by the OVF1 when OVF1 flag is set to 1.

Bit 5 OVIE1	Description	
0	OVI1 interrupt requested by OVF1 flag is disabled	(Initial value)
1	OVI1 interrupt requested by OVF1 flag is enabled	

Bit 4—Overflow Interrupt Enable 0 (OVIE0): Enables or disables the interrupt requested by the OVF0 when OVF0 flag is set to 1.

Bit 4 OVIE0	Description	
0	OVI0 interrupt requested by OVF0 flag is disabled	(Initial value)
1	OVI0 interrupt requested by OVF0 flag is enabled	

Bit 3—Reserved: This bit cannot be modified and is always read as 1.

Bit 2—Overflow Flag 2 (OVF2): This status flag indicates 16TCNT2 overflow.

Bit 2 OVF2	Description	
0	[Clearing condition] Read OVF2 flag when OVF2 = 1, then write 0 in OVF2 flag	(Initial value)
1	[Setting condition] 16TCNT2 overflowed from H'FFFF to H'0000, or underflowed from H'0000 to H'FFFF	

Note: 16TCNT underflow occurs when 16TCNT operates as an up/down-counter. Underflow occurs only when channel 2 operates in phase counting mode (MDF = 1 in TMDR).

Bit 1—Overflow Flag 1 (OVF1): This status flag indicates 16TCNT1 overflow.

Bit 1 OVF1	Description	
0	[Clearing condition] Read OVF1 flag when OVF1 = 1, then write 0 in OVF1 flag	(Initial value)
1	[Setting condition] 16TCNT1 overflowed from H'FFFF to H'0000	

Bit 0—Overflow Flag 0 (OVF0): This status flag indicates 16TCNT0 overflow.

Bit 0 OVF0	Description	
0	[Clearing condition] Read OVF0 flag when OVF0 = 1, then write 0 in OVF0 flag	(Initial value)
1	[Setting condition] 16TCNT0 overflowed from H'FFFF to H'0000	

8.2.7 Timer Counters (16TCNT)

16TCNT is a 16-bit counter. The 16-bit timer has three 16TCNTs, one for each channel.

Channel	Abbreviation	Function
0	16TCNT0	Up-counter
1	16TCNT1	
2	16TCNT2	Phase counting mode: up/down-counter Other modes: up-counter

Bit	15	14	13	12	11	10	9	8	7	6	5	4	3	2	1	0
Initial value	0	0	0	0	0	0	0	0	0	0	0	0	0	0	0	0
Read/Write	R/W	R/W	R/W	R/W	R/W	R/W	R/W	R/W	R/W	R/W	R/W	R/W	R/W	R/W	R/W	R/W

Each 16TCNT is a 16-bit readable/writable register that counts pulse inputs from a clock source. The clock source is selected by bits TPSC2 to TPSC0 in 16TCR.

16TCNT0 and 16TCNT1 are up-counters. 16TCNT2 is an up/down-counter in phase counting mode and an up-counter in other modes.

16TCNT can be cleared to H'0000 by compare match with GRA or GRB or by input capture to GRA or GRB (counter clearing function).

When 16TCNT overflows (changes from H'FFFF to H'0000), the OVF flag is set to 1 in TISRC of the corresponding channel.

When 16TCNT underflows (changes from H'0000 to H'FFFF), the OVF flag is set to 1 in TISRC of the corresponding channel.

The 16TCNTs are linked to the CPU by an internal 16-bit bus and can be written or read by either word access or byte access.

Each 16TCNT is initialized to H'0000 by a reset and in standby mode.

8.2.8 General Registers (GRA, GRB)

The general registers are 16-bit registers. The 16-bit timer has 6 general registers, two in each channel.

Channel	Abbreviation	Function
0	GRA0, GRB0	Output compare/input capture register
1	GRA1, GRB1	
2	GRA2, GRB2	

Bit	15	14	13	12	11	10	9	8	7	6	5	4	3	2	1	0
Initial value	1	1	1	1	1	1	1	1	1	1	1	1	1	1	1	1
Read/Write	R/W	R/W	R/W	R/W	R/W	R/W	R/W	R/W	R/W	R/W	R/W	R/W	R/W	R/W	R/W	R/W

A general register is a 16-bit readable/writable register that can function as either an output compare register or an input capture register. The function is selected by settings in TIOR.

When a general register is used as an output compare register, its value is constantly compared with the 16TCNT value. When the two values match (compare match), the IMFA or IMFB flag is set to 1 in TISRA/TISRB. Compare match output can be selected in TIOR.

When a general register is used as an input capture register, an external input capture signal are detected and the current 16TCNT value is stored in the general register. The corresponding IMFA or IMFB flag in TISRA/TISRB is set to 1 at the same time. The edges of the input capture signal are selected in TIOR.

TIOR settings are ignored in PWM mode.

General registers are linked to the CPU by an internal 16-bit bus and can be written or read by either word access or byte access.

General registers are set as output compare registers (with no pin output) and initialized to H'FFFF by a reset and in standby mode.

8.2.9 Timer Control Registers (16TCR)

16TCR is an 8-bit register. The 16-bit timer has three 16TCRs, one in each channel.

Channel	Abbreviation	Function
0	16TCR0	16TCR controls the timer counter. The 16TCRs in all channels are functionally identical. When phase counting mode is selected in channel 2, the settings of bits CKEG1 and CKEG0 and TPSC2 to TPSC0 in 16TCR2 are ignored
1	16TCR1	
2	16TCR2	

Bit	7	6	5	4	3	2	1	0
	—	CCLR1	CCLR0	CKEG1	CKEG0	TPSC2	TPSC1	TPSC0
Initial value	1	0	0	0	0	0	0	0
Read/Write	—	R/W	R/W	R/W	R/W	R/W	R/W	R/W

Timer prescaler 2 to 0
These bits select the timer counter clock

Clock edge 1/0
These bits select external clock edges

Counter clear 1/0
These bits select the counter clear source

Reserved bit

Each 16TCR is an 8-bit readable/writable register that selects the timer counter clock source, selects the edge or edges of external clock sources, and selects how the counter is cleared.

16TCR is initialized to H'80 by a reset and in standby mode.

Bit 7—Reserved: This bit cannot be modified and is always read as 1.

Bits 6 and 5—Counter Clear 1 and 0 (CCLR1, CCLR0): These bits select how 16TCNT is cleared.

Bit 6 CCLR1	Bit 5 CCLR0	Description	
0	0	16TCNT is not cleared	(Initial value)
	1	16TCNT is cleared by GRA compare match or input capture*[1]	
1	0	16TCNT is cleared by GRB compare match or input capture*[1]	
	1	Synchronous clear: 16TCNT is cleared in synchronization with other synchronized timers*[2]	

Notes: 1. 16TCNT is cleared by compare match when the general register functions as an output compare register, and by input capture when the general register functions as an input capture register.
2. Selected in TSNC.

Bits 4 and 3—Clock Edge 1 and 0 (CKEG1, CKEG0): These bits select external clock input edges when an external clock source is used.

Bit 4 CKEG1	Bit 3 CKEG0	Description	
0	0	Count rising edges	(Initial value)
	1	Count falling edges	
1	—	Count both edges	

When channel 2 is set to phase counting mode, bits CKEG1 and CKEG0 in 16TCR2 are ignored. Phase counting takes precedence.

Bits 2 to 0—Timer Prescaler 2 to 0 (TPSC2 to TPSC0): These bits select the counter clock source.

Bit 2 TPSC2	Bit 1 TPSC1	Bit 0 TPSC0	Function
0	0	0	Internal clock: ϕ (Initial value)
		1	Internal clock: $\phi/2$
	1	0	Internal clock: $\phi/4$
		1	Internal clock: $\phi/8$
1	0	0	External clock A: TCLKA input
		1	External clock B: TCLKB input
	1	0	External clock C: TCLKC input
		1	External clock D: TCLKD input

When bit TPSC2 is cleared to 0 an internal clock source is selected, and the timer counts only falling edges. When bit TPSC2 is set to 1 an external clock source is selected, and the timer counts the edges selected by bits CKEG1 and CKEG0.

When channel 2 is set to phase counting mode (MDF = 1 in TMDR), the settings of bits TPSC2 to TPSC0 in 16TCR2 are ignored. Phase counting takes precedence.

8.2.10 Timer I/O Control Register (TIOR)

TIOR is an 8-bit register. The 16-bit timer has three TIORs, one in each channel.

Channel	Abbreviation	Function
0	TIOR0	TIOR controls the general registers. Some functions differ in PWM mode.
1	TIOR1	
2	TIOR2	

Bit	7	6	5	4	3	2	1	0
	—	IOB2	IOB1	IOB0	—	IOA2	IOA1	IOA0
Initial value	1	0	0	0	1	0	0	0
Read/Write	—	R/W	R/W	R/W	—	R/W	R/W	R/W

I/O control A2 to A0
These bits select GRA functions

Reserved bit

I/O control B2 to B0
These bits select GRB functions

Reserved bit

Each TIOR is an 8-bit readable/writable register that selects the output compare or input capture function for GRA and GRB, and specifies the functions of the TIORA and TIORB pins. If the output compare function is selected, TIOR also selects the type of output. If input capture is selected, TIOR also selects the edges of the input capture signal.

TIOR is initialized to H'88 by a reset and in standby mode.

Bit 7—Reserved: This bit cannot be modified and is always read as 1.

Bits 6 to 4—I/O Control B2 to B0 (IOB2 to IOB0): These bits select the GRB function.

Bit 6 IOB2	Bit 5 IOB1	Bit 4 IOB0	Function	
0	0	0	GRB is an output compare register	No output at compare match (Initial value)
		1		0 output at GRB compare match*[1]
	1	0		1 output at GRB compare match*[1]
		1		Output toggles at GRB compare match (1 output in channel 2)*[1, 2]
1	0	0	GRB is an input capture register	GRB captures rising edge of input
		1		GRB captures falling edge of input
	1	0		GRB captures both edges of input
		1		

Notes: 1. After a reset, the output conforms to the TOLR setting until the first compare match.
2. Channel 2 output cannot be toggled by compare match. When this setting is made, 1 output is selected automatically.

Bit 3—Reserved: This bit cannot be modified and is always read as 1.

Bits 2 to 0—I/O Control A2 to A0 (IOA2 to IOA0): These bits select the GRA function.

Bit 2 IOA2	Bit 1 IOA1	Bit 0 IOA0	Function	
0	0	0	GRA is an output compare register	No output at compare match (Initial value)
		1		0 output at GRA compare match*[1]
	1	0		1 output at GRA compare match*[1]
		1		Output toggles at GRA compare match (1 output in channel 2)*[1, 2]
1	0	0	GRA is an input capture register	GRA captures rising edge of input
		1		GRA captures falling edge of input
	1	0		GRA captures both edges of input
		1		

Notes: 1. After a reset, the output conforms to the TOLR setting until the first compare match.
2. Channel 2 output cannot be toggled by compare match. When this setting is made, 1 output is selected automatically.

8.2.11 Timer Output Level Setting Register C (TOLR)

TOLR is an 8-bit write-only register that selects the timer output level for channels 0 to 2.

Bit	7	6	5	4	3	2	1	0
	—	—	TOB2	TOA2	TOB1	TOA1	TOB0	TOA0
Initial value	1	1	0	0	0	0	0	0
Read/Write	—	—	W	W	W	W	W	W

Output level setting A2 to A0, B2 to B0
These bits set the levels of the timer outputs ($TIOCA_2$ to $TIOCA_0$, and $TIOCB_2$ to $TIOCB_0$)

Reserved bits

A TOLR setting can only be made when the corresponding bit in TSTR is 0.

TOLR is a write-only register, and cannot be read. If it is read, all bits will return a value of 1.

TOLR is initialized to H'C0 by a reset and in standby mode.

Bits 7 and 6—Reserved: These bits cannot be modified.

Bit 5—Output Level Setting B2 (TOB2): Sets the value of timer output $TIOCB_2$.

Bit 5 TOB2	Description	
0	$TIOCB_2$ is 0	(Initial value)
1	$TIOCB_2$ is 1	

Bit 4—Output Level Setting A2 (TOA2): Sets the value of timer output $TIOCA_2$.

Bit 4 TOA2	Description	
0	$TIOCA_2$ is 0	(Initial value)
1	$TIOCA_2$ is 1	

Bit 3—Output Level Setting B1 (TOB1): Sets the value of timer output $TIOCB_1$.

Bit 3 TOB1	Description	
0	$TIOCB_1$ is 0	(Initial value)
1	$TIOCB_1$ is 1	

Bit 2—Output Level Setting A1 (TOA1): Sets the value of timer output $TIOCA_1$.

Bit 2 TOA1	Description	
0	$TIOCA_1$ is 0	(Initial value)
1	$TIOCA_1$ is 1	

Bit 1—Output Level Setting B0 (TOB0): Sets the value of timer output $TIOCB_0$.

Bit 0 TOB0	Description	
0	$TIOCB_0$ is 0	(Initial value)
1	$TIOCB_0$ is 1	

Bit 0—Output Level Setting A0 (TOA0): Sets the value of timer output $TIOCA_0$.

Bit 0 TOA0	Description	
0	$TIOCA_0$ is 0	(Initial value)
1	$TIOCA_0$ is 1	

8.3 CPU Interface

8.3.1 16-Bit Accessible Registers

The timer counters (16TCNTs), general registers A and B (GRAs and GRBs) are 16-bit registers, and are linked to the CPU by an internal 16-bit data bus. These registers can be written or read a word at a time, or a byte at a time.

Figures 8.4 and 8.5 show examples of word read/write access to a timer counter (16TCNT). Figures 8.6 to 8.9 show examples of byte read/write access to 16TCNTH and 16TCNTL.

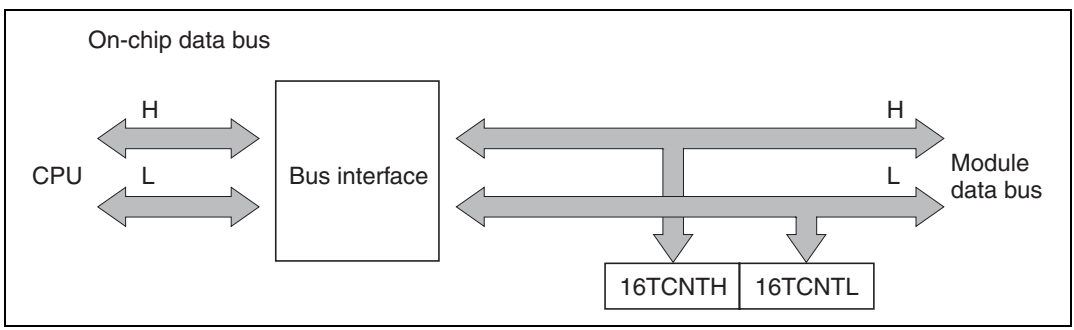

Figure 8.4 16TCNT Access Operation [CPU → 16TCNT (Word)]

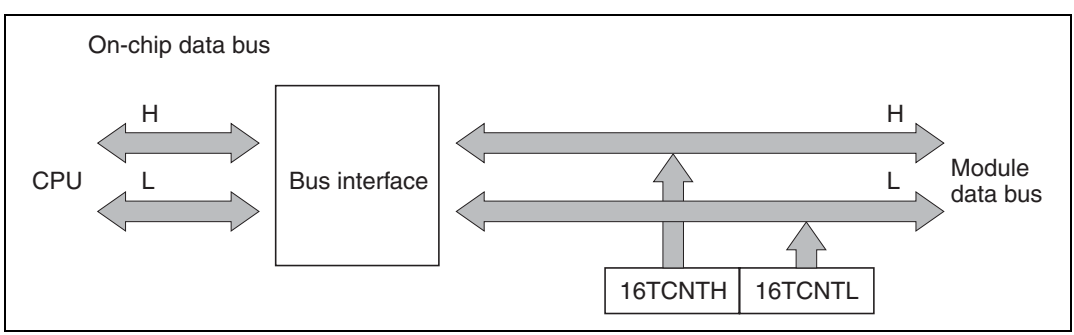

Figure 8.5 Access to Timer Counter (CPU Reads 16TCNT, Word)

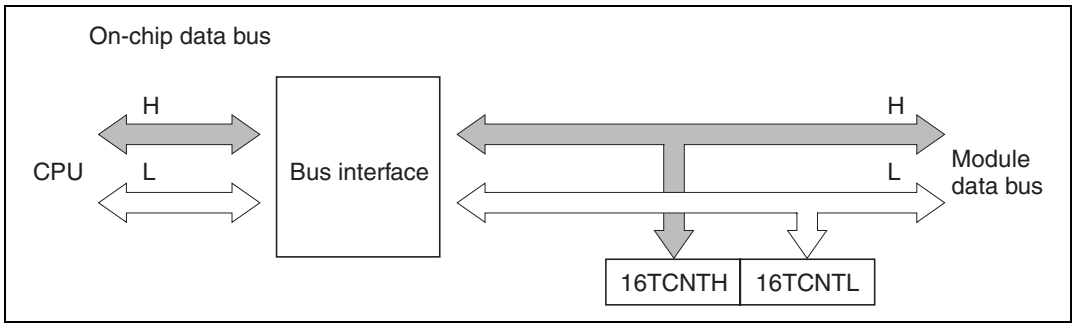

Figure 8.6 Access to Timer Counter H (CPU Writes to 16TCNTH, Upper Byte)

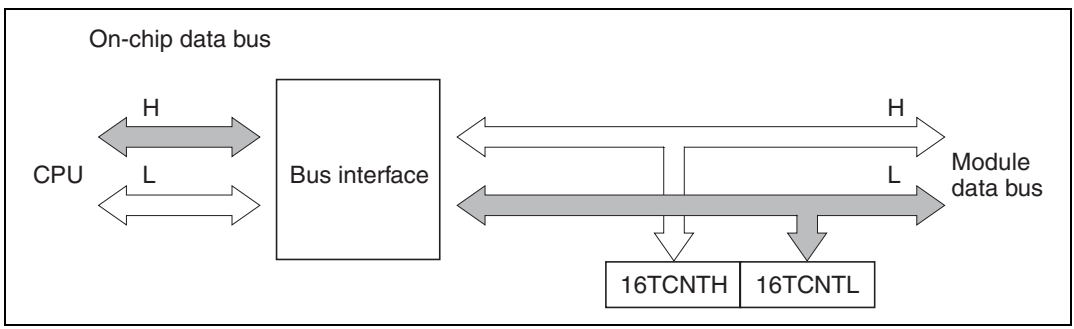

Figure 8.7 Access to Timer Counter L (CPU Writes to 16TCNTL, Lower Byte)

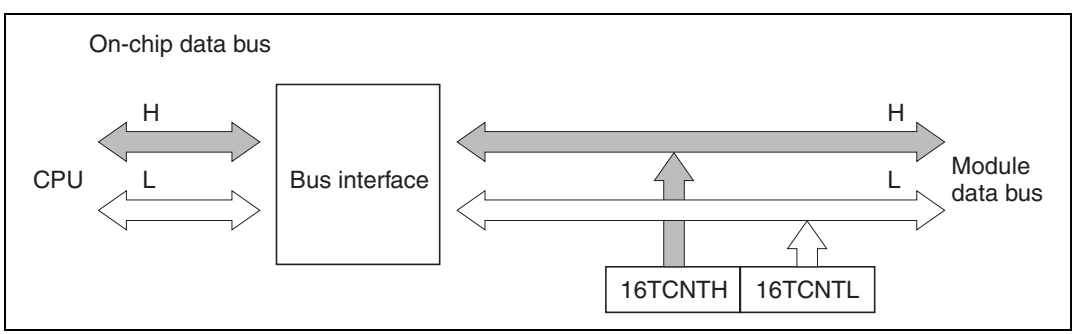

Figure 8.8 Access to Timer Counter H (CPU Reads 16TCNTH, Upper Byte)

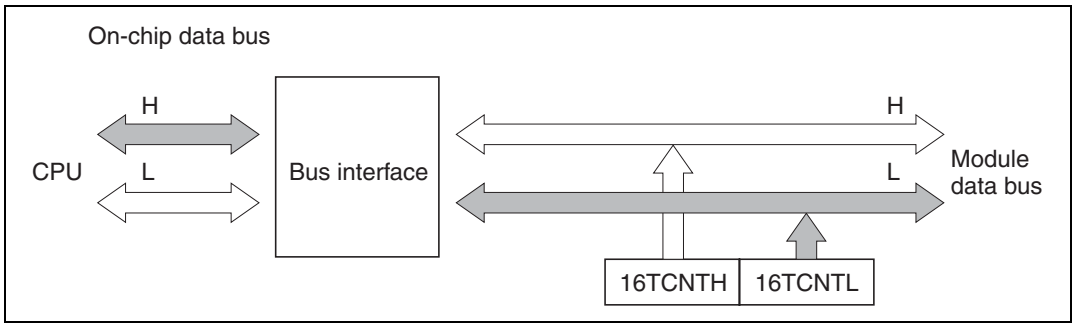

Figure 8.9 Access to Timer Counter L (CPU Reads 16TCNTL, Lower Byte)

8.3.2 8-Bit Accessible Registers

The registers other than the timer counters and general registers are 8-bit registers. These registers are linked to the CPU by an internal 8-bit data bus.

Figures 8.10 and 8.11 show examples of byte read and write access to a 16TCR.

If a word-size data transfer instruction is executed, two byte transfers are performed.

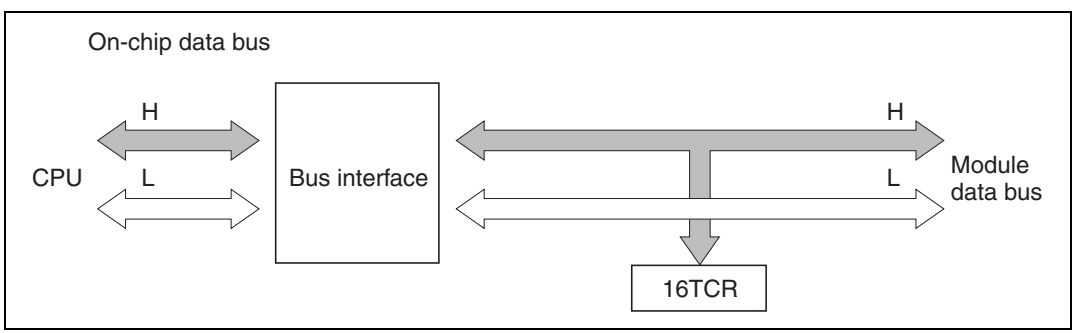

Figure 8.10 16TCR Access (CPU Writes to 16TCR)

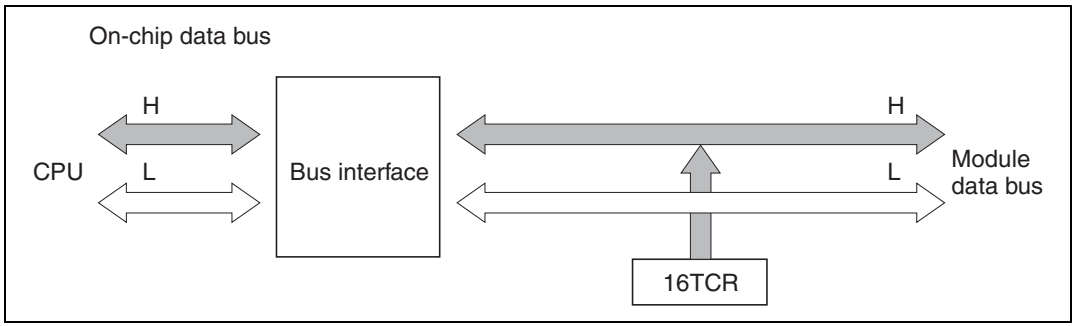

Figure 8.11 16TCR Access (CPU Reads 16TCR)

8.4 Operation

8.4.1 Overview

A summary of operations in the various modes is given below.

Normal Operation: Each channel has a timer counter and general registers. The timer counter counts up, and can operate as a free-running counter, periodic counter, or external event counter. GRA and GRB can be used for input capture or output compare.

Synchronous Operation: The timer counters in designated channels are preset synchronously. Data written to the timer counter in any one of these channels is simultaneously written to the timer counters in the other channels as well. The timer counters can also be cleared synchronously if so designated by the CCLR1 and CCLR0 bits in the TCRs.

PWM Mode: A PWM waveform is output from the TIOCA pin. The output goes to 1 at compare match A and to 0 at compare match B. The duty cycle can be varied from 0% to 100% depending on the settings of GRA and GRB. When a channel is set to PWM mode, its GRA and GRB automatically become output compare registers.

Phase Counting Mode: The phase relationship between two clock signals input at TCLKA and TCLKB is detected and 16TCNT2 counts up or down accordingly. When phase counting mode is selected TCLKA and TCLKB become clock input pins and 16TCNT2 operates as an up/down-counter.

8.4.2 Basic Functions

Counter Operation: When one of bits STR0 to STR2 is set to 1 in the timer start register (TSTR), the timer counter (16TCNT) in the corresponding channel starts counting. The counting can be free-running or periodic.

- Sample setup procedure for counter

  Figure 8.12 shows a sample procedure for setting up a counter.

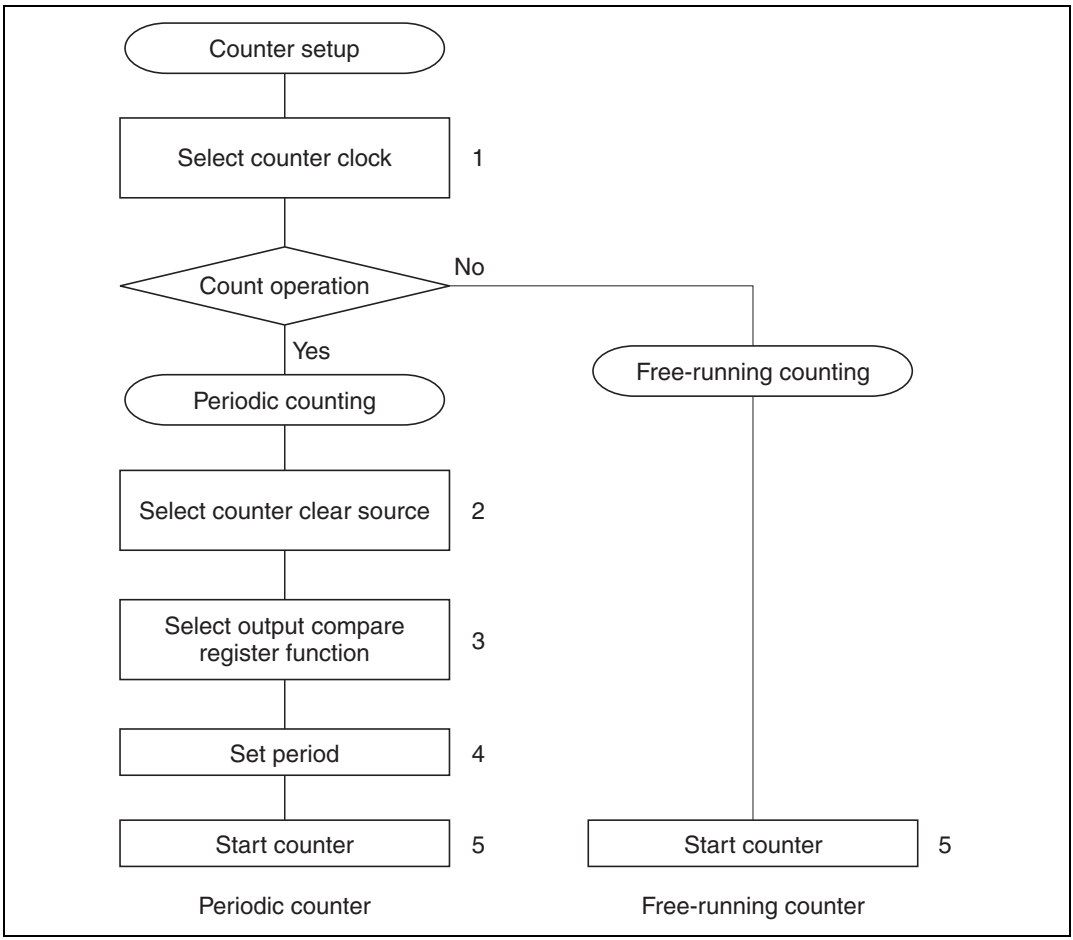

Figure 8.12 Counter Setup Procedure (Example)

1. Set bits TPSC2 to TPSC0 in 16TCR to select the counter clock source. If an external clock source is selected, set bits CKEG1 and CKEG0 in 16TCR to select the desired edge(s) of the external clock signal.
2. For periodic counting, set CCLR1 and CCLR0 in 16TCR to have 16TCNT cleared at GRA compare match or GRB compare match.
3. Set TIOR to select the output compare function of GRA or GRB, whichever was selected in step 2.
4. Write the count period in GRA or GRB, whichever was selected in step 2.

5. Set the STR bit to 1 in TSTR to start the timer counter.

- Free-running and periodic counter operation

  A reset leaves the counters (16TCNTs) in 16-bit timer channels 0 to 2 all set as free-running counters. A free-running counter starts counting up when the corresponding bit in TSTR is set to 1. When the count overflows from H'FFFF to H'0000, the OVF flag is set to 1 in TISRC. After the overflow, the counter continues counting up from H'0000. Figure 8.13 illustrates free-running counting.

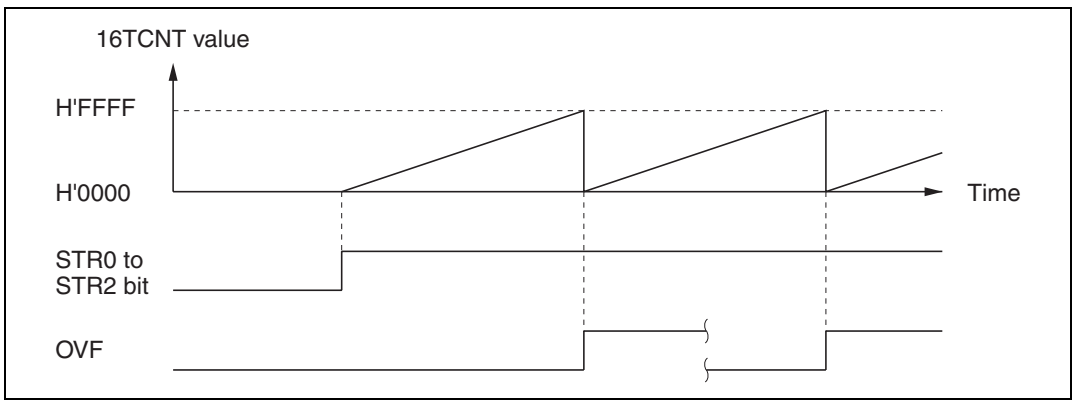

Figure 8.13 Free-Running Counter Operation

When a channel is set to have its counter cleared by compare match, in that channel 16TCNT operates as a periodic counter. Select the output compare function of GRA or GRB, set bit CCLR1 or CCLR0 in 16TCR to have the counter cleared by compare match, and set the count period in GRA or GRB. After these settings, the counter starts counting up as a periodic counter when the corresponding bit is set to 1 in TSTR. When the count matches GRA or GRB, the IMFA or IMFB flag is set to 1 in TISRA/TISRB and the counter is cleared to H'0000. If the corresponding IMIEA or IMIEB bit is set to 1 in TISRA/TISRB, a CPU interrupt is requested at this time. After the compare match, 16TCNT continues counting up from H'0000. Figure 8.14 illustrates periodic counting.

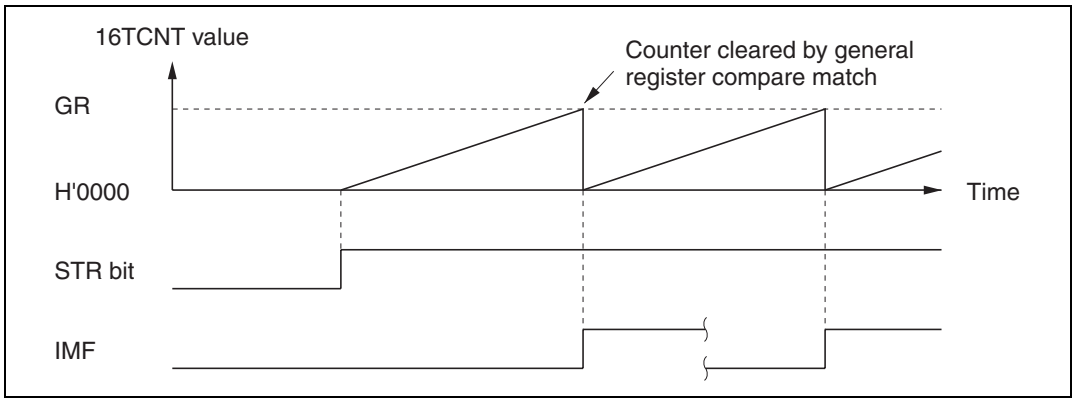

Figure 8.14 Periodic Counter Operation

- 16TCNT count timing
  - — Internal clock source

    Bits TPSC2 to TPSC0 in 16TCR select the system clock (ϕ) or one of three internal clock sources obtained by prescaling the system clock (ϕ/2, ϕ/4, ϕ/8).

    Figure 8.15 shows the timing.

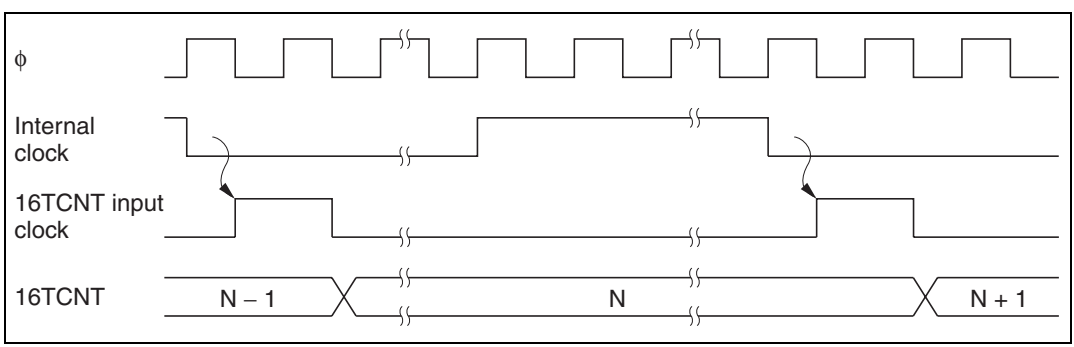

Figure 8.15 Count Timing for Internal Clock Sources

  - — External clock source

    The external clock pin (TCLKA to TCLKD) can be selected by bits TPSC2 to TPSC0 in 16TCR, and the detected edge by bits CKEG1 and CKEG0. The rising edge, falling edge, or both edges can be selected.

    The pulse width of the external clock signal must be at least 1.5 system clocks when a single edge is selected, and at least 2.5 system clocks when both edges are selected. Shorter pulses will not be counted correctly.

    Figure 8.16 shows the timing when both edges are detected.

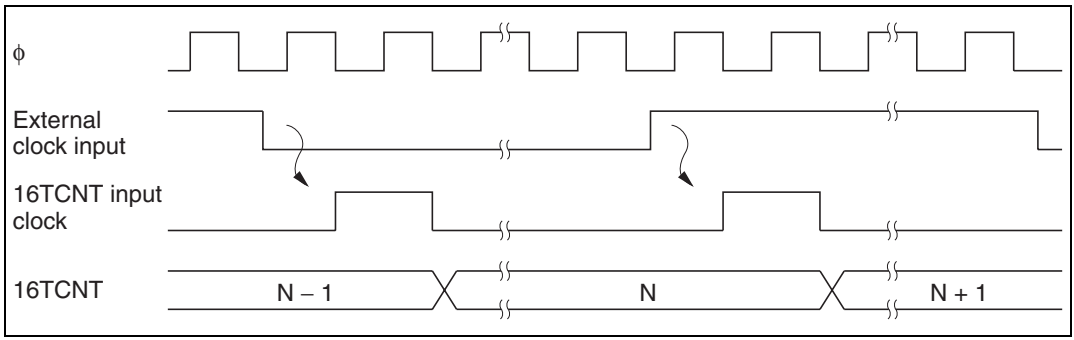

Figure 8.16 Count Timing for External Clock Sources (when Both Edges are Detected)

Waveform Output by Compare Match: In 16-bit timer channels 0, 1 compare match A or B can cause the output at the TIOCA or TIOCB pin to go to 0, go to 1, or toggle. In channel 2 the output can only go to 0 or go to 1.

- Sample setup procedure for waveform output by compare match

  Figure 8.17 shows an example of the setup procedure for waveform output by compare match.

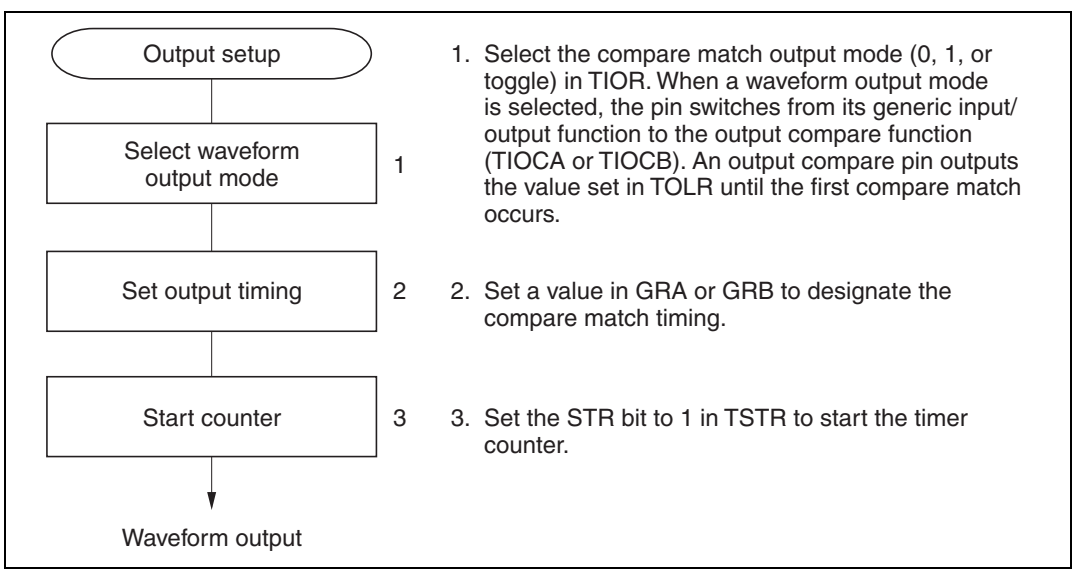

Figure 8.17 Setup Procedure for Waveform Output by Compare Match (Example)

- Examples of waveform output

  Figure 8.18 shows examples of 0 and 1 output. 16TCNT operates as a free-running counter, 0 output is selected for compare match A, and 1 output is selected for compare match B. When the pin is already at the selected output level, the pin level does not change.

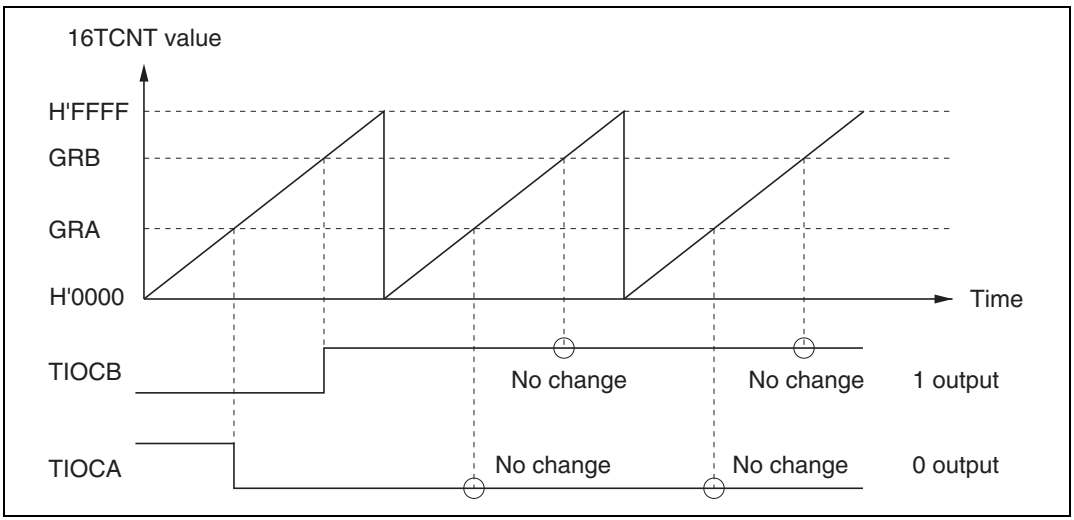

Figure 8.18 0 and 1 Output (TOA = 1, TOB = 0)

Figure 8.19 shows examples of toggle output. 16TCNT operates as a periodic counter, cleared by compare match B. Toggle output is selected for both compare match A and B.

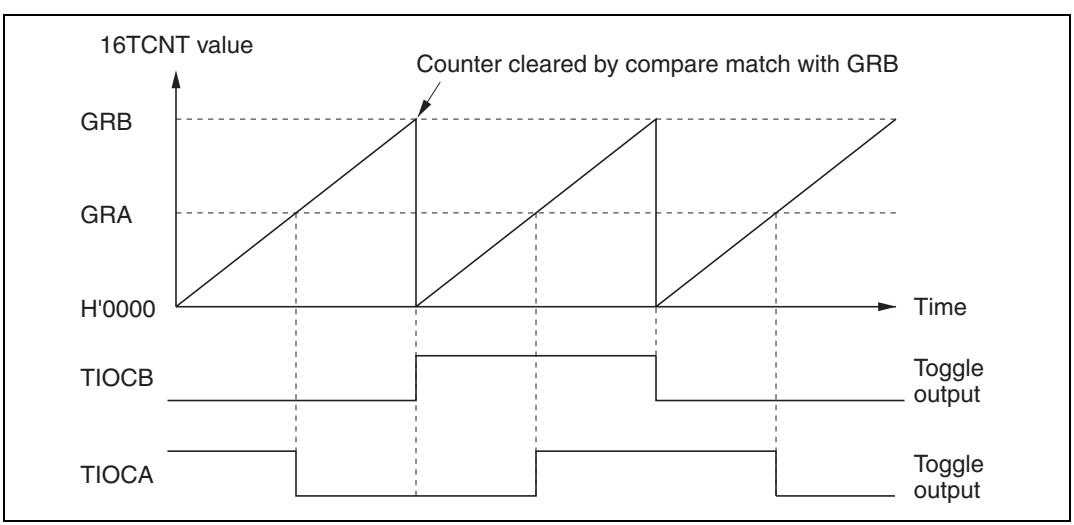

Figure 8.19 Toggle Output (TOA = 1, TOB = 0)

- Output compare output timing

  The compare match signal is generated in the last state in which 16TCNT and the general register match (when 16TCNT changes from the matching value to the next value). When the compare match signal is generated, the output value selected in TIOR is output at the output compare pin (TIOCA or TIOCB). When 16TCNT matches a general register, the compare match signal is not generated until the next counter clock pulse.

  Figure 8.20 shows the output compare timing.

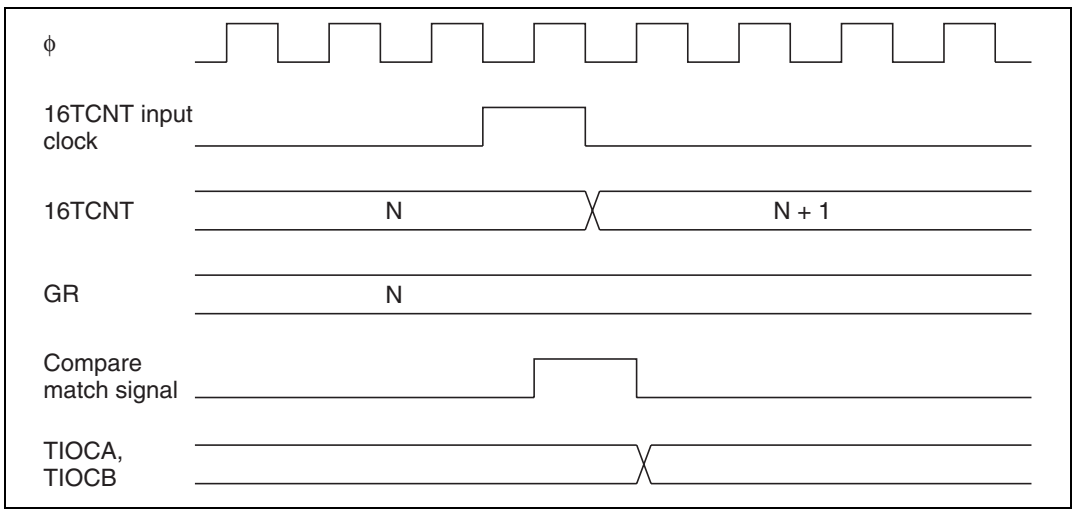

Figure 8.20 Output Compare Output Timing

Input Capture Function: The 16TCNT value can be transferred to a general register when an input edge is detected at an input capture input/output compare pin (TIOCA or TIOCB). Rising-edge, falling-edge, or both-edge detection can be selected. The input capture function can be used to measure pulse width or period.

- Sample setup procedure for input capture

  Figure 8.21 shows a sample procedure for setting up input capture.

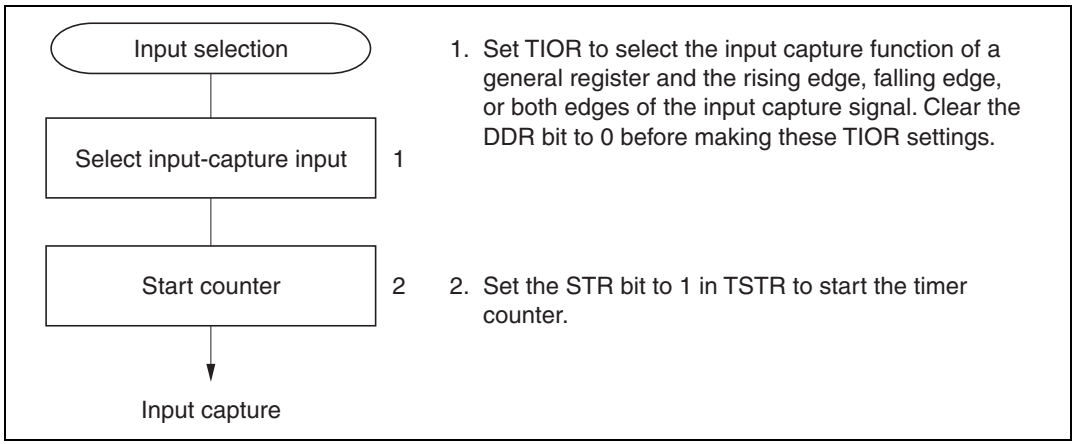

Figure 8.21 Setup Procedure for Input Capture (Example)

- Examples of input capture

  Figure 8.22 illustrates input capture when the falling edge of TIOCB and both edges of TIOCA are selected as capture edges. 16TCNT is cleared by input capture into GRB.

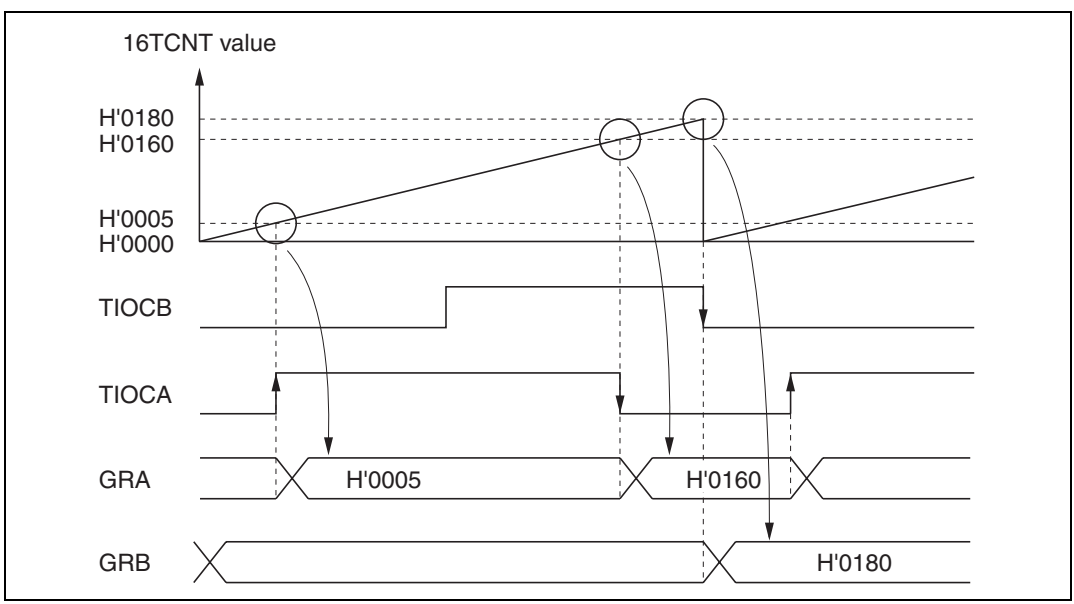

Figure 8.22 Input Capture (Example)

- Input capture signal timing

  Input capture on the rising edge, falling edge, or both edges can be selected by settings in TIOR. Figure 8.23 shows the timing when the rising edge is selected. The pulse width of the input capture signal must be at least 1.5 system clocks for single-edge capture, and 2.5 system clocks for capture of both edges.

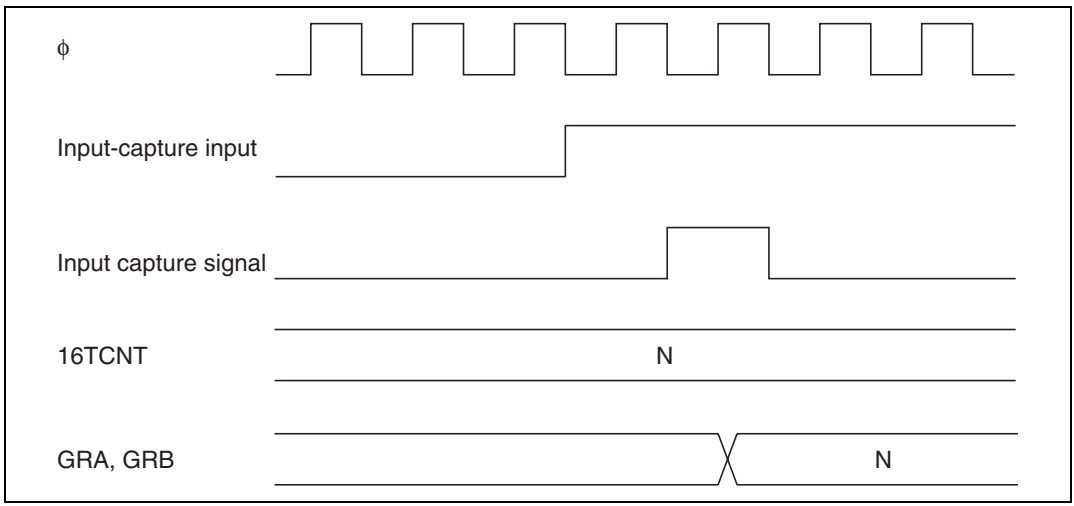

Figure 8.23 Input Capture Signal Timing

8.4.3 Synchronization

The synchronization function enables two or more timer counters to be synchronized by writing the same data to them simultaneously (synchronous preset). With appropriate 16TCR settings, two or more timer counters can also be cleared simultaneously (synchronous clear). Synchronization enables additional general registers to be associated with a single time base. Synchronization can be selected for all channels (0 to 2).

Sample Setup Procedure for Synchronization: Figure 8.24 shows a sample procedure for setting up synchronization.

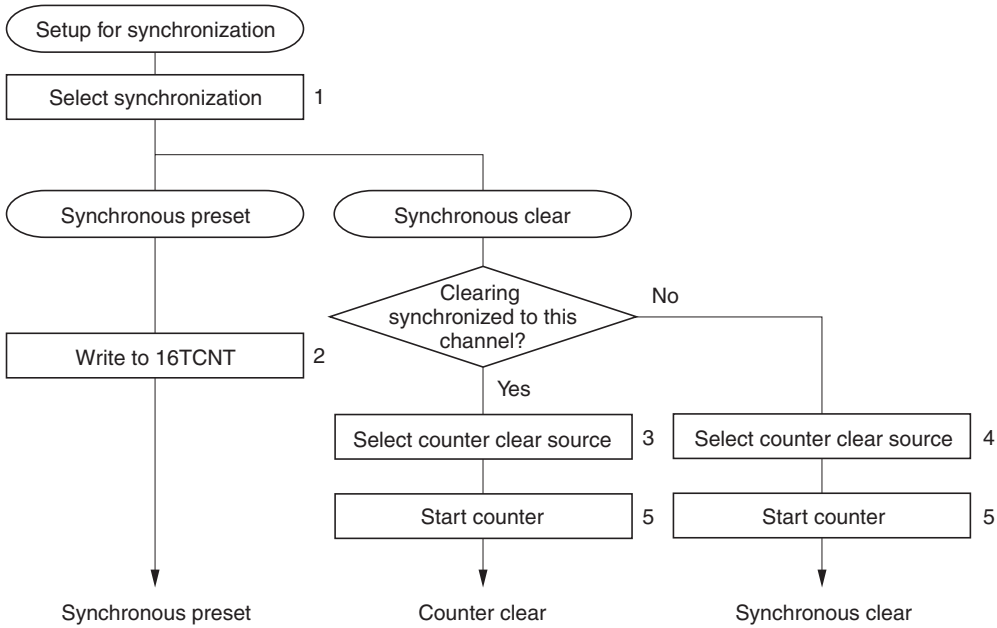

1. Set the SYNC bits to 1 in TSNC for the channels to be synchronized.
2. When a value is written in 16TCNT in one of the synchronized channels, the same value is simultaneously written in 16TCNT in the other channels.
3. Set the CCLR1 or CCLR0 bit in 16TCR to have the counter cleared by compare match or input capture.
4. Set the CCLR1 and CCLR0 bits in 16TCR to have the counter cleared synchronously.
5. Set the STR bits in TSTR to 1 to start the synchronized counters.

Figure 8.24 Setup Procedure for Synchronization (Example)

Example of Synchronization: Figure 8.25 shows an example of synchronization. Channels 0, 1, and 2 are synchronized, and are set to operate in PWM mode. Channel 0 is set for counter clearing by compare match with GRB0. Channels 1 and 2 are set for synchronous counter clearing. The timer counters in channels 0, 1, and 2 are synchronously preset, and are synchronously cleared by compare match with GRB0. A three-phase PWM waveform is output from pins $TIOCA_0$, $TIOCA_1$, and $TIOCA_2$. For further information on PWM mode, see section 8.4.4, PWM Mode.

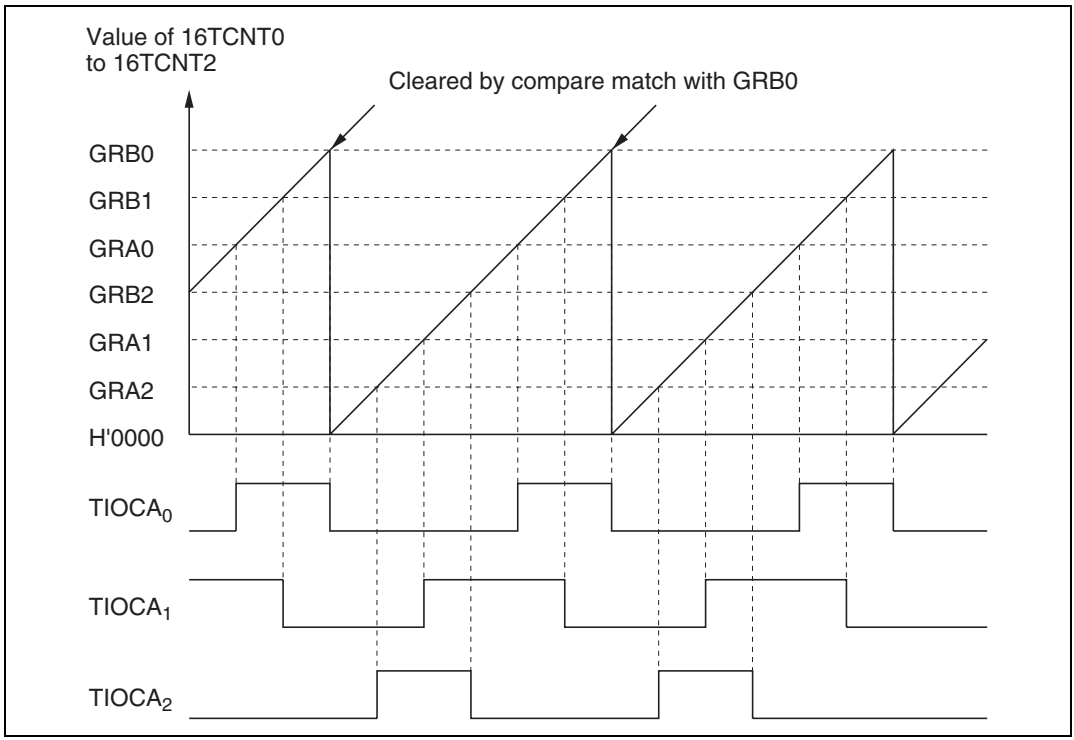

Figure 8.25 Synchronization (Example)

8.4.4 PWM Mode

In PWM mode GRA and GRB are paired and a PWM waveform is output from the TIOCA pin. GRA specifies the time at which the PWM output changes to 1. GRB specifies the time at which the PWM output changes to 0. If either GRA or GRB compare match is selected as the counter clear source, a PWM waveform with a duty cycle from 0% to 100% is output at the TIOCA pin. PWM mode can be selected in all channels (0 to 2).

Table 8.4 summarizes the PWM output pins and corresponding registers. If the same value is set in GRA and GRB, the output does not change when compare match occurs.

Table 8.4 PWM Output Pins and Registers

Channel	Output Pin	1 Output	0 Output
0	$TIOCA_0$	GRA0	GRB0
1	$TIOCA_1$	GRA1	GRB1
2	$TIOCA_2$	GRA2	GRB2

Sample Setup Procedure for PWM Mode: Figure 8.26 shows a sample procedure for setting up PWM mode.

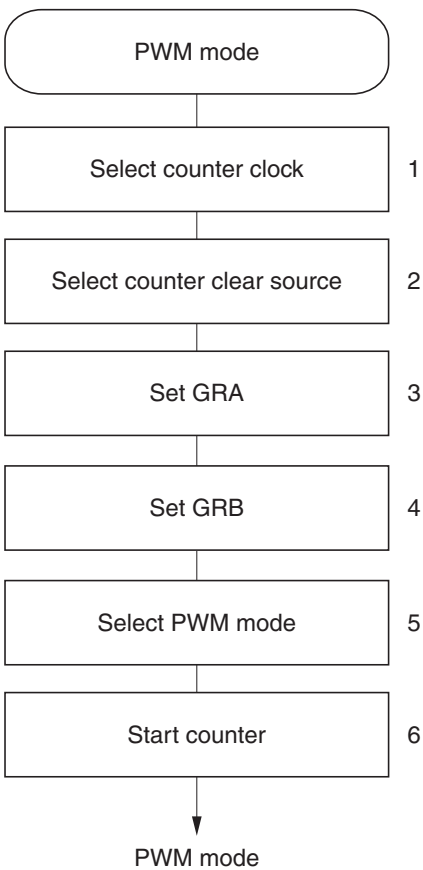

1. Set bits TPSC2 to TPSC0 in 16TCR to select the counter clock source. If an external clock source is selected, set bits CKEG1 and CKEG0 in 16TCR to select the desired edge(s) of the external clock signal.
2. Set bits CCLR1 and CCLR0 in 16TCR to select the counter clear source.
3. Set the time at which the PWM waveform should go to 1 in GRA.
4. Set the time at which the PWM waveform should go to 0 in GRB.
5. Set the PWM bit in TMDR to select PWM mode. When PWM mode is selected, regardless of the TIOR contents, GRA and GRB become output compare registers specifying the times at which the PWM output goes to 1 and 0. The TIOCA pin automatically becomes the PWM output pin. The TIOCB pin conforms to the settings of bits IOB1 and IOB0 in TIOR. If TIOCB output is not desired, clear both IOB1 and IOB0 to 0.
6. Set the STR bit to 1 in TSTR to start the timer counter.

Figure 8.26 Setup Procedure for PWM Mode (Example)

Examples of PWM Mode: Figure 8.27 shows examples of operation in PWM mode. In PWM mode TIOCA becomes an output pin. The output goes to 1 at compare match with GRA, and to 0 at compare match with GRB.

In the examples shown, 16TCNT is cleared by compare match with GRA or GRB. Synchronized operation and free-running counting are also possible.

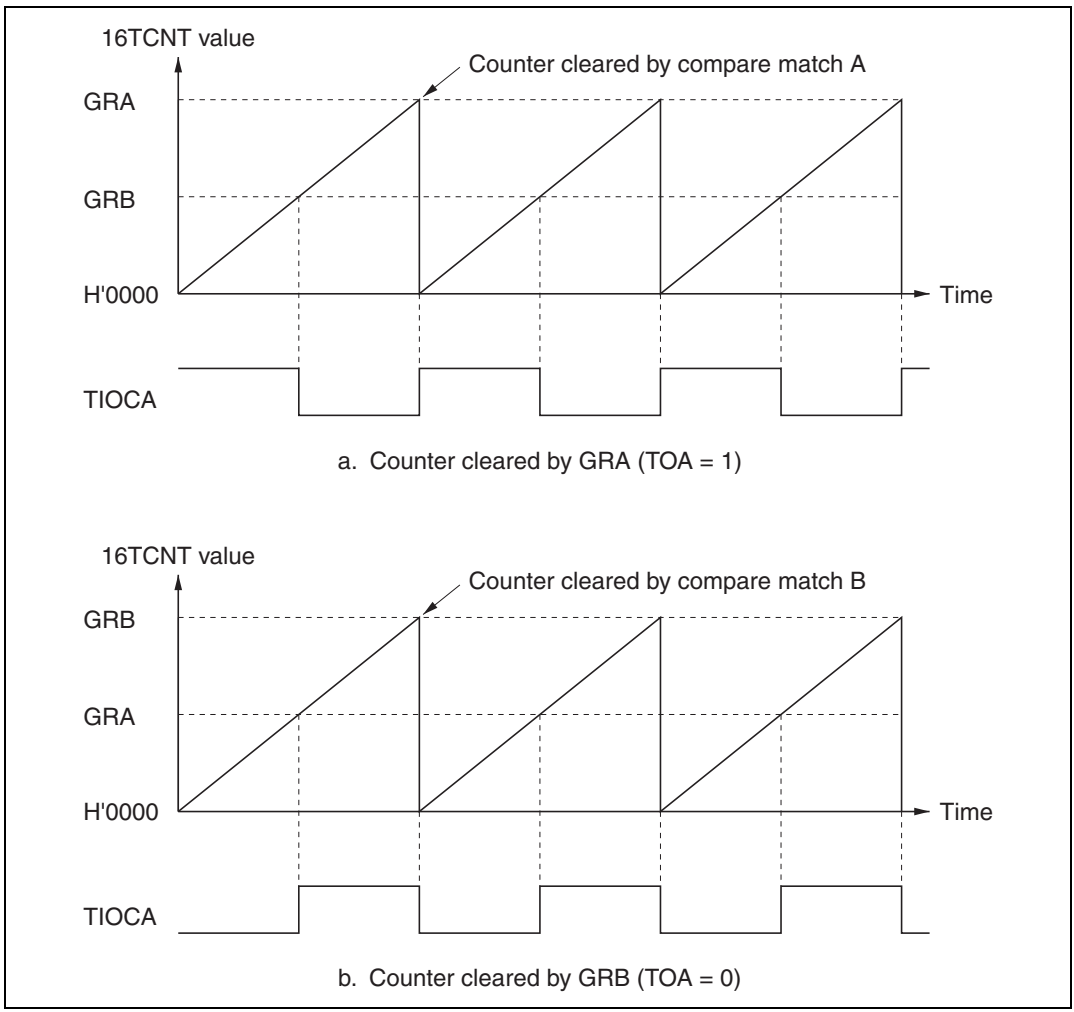

Figure 8.27 PWM Mode (Example 1)

Figure 8.28 shows examples of the output of PWM waveforms with duty cycles of 0% and 100%. If the counter is cleared by compare match with GRB, and GRA is set to a higher value than GRB, the duty cycle is 0%. If the counter is cleared by compare match with GRA, and GRB is set to a higher value than GRA, the duty cycle is 100%.

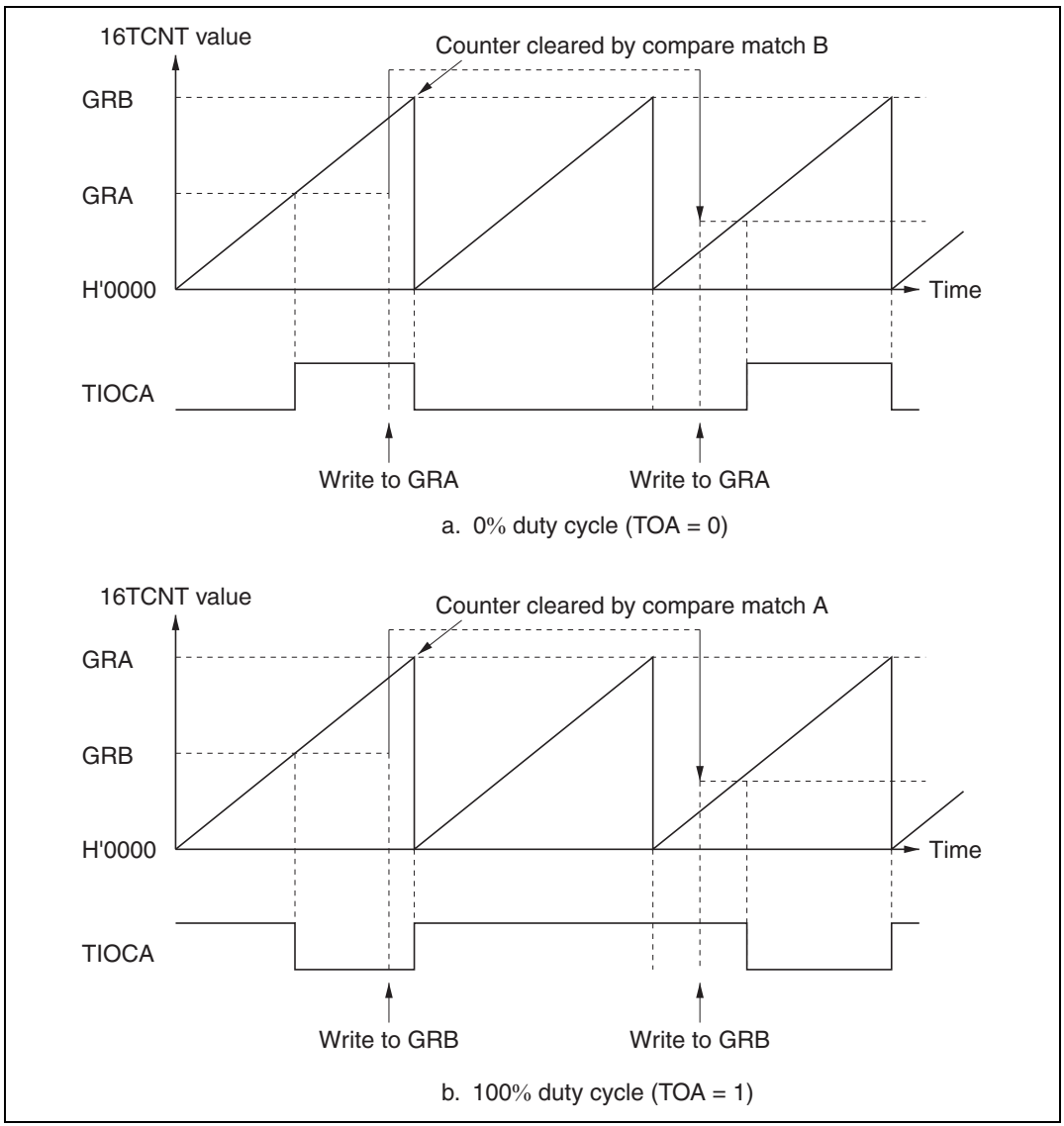

Figure 8.28 PWM Mode (Example 2)

8.4.5 Phase Counting Mode

In phase counting mode the phase difference between two external clock inputs (at the TCLKA and TCLKB pins) is detected, and 16TCNT2 counts up or down accordingly.

In phase counting mode, the TCLKA and TCLKB pins automatically function as external clock input pins and 16TCNT2 becomes an up/down-counter, regardless of the settings of bits TPSC2 to TPSC0, CKEG1, and CKEG0 in 16TCR2. Settings of bits CCLR1, CCLR0 in 16TCR2, and settings in TIOR2, TISRA, TISRB, TISRC, setting of STR2 bit in TSTR, GRA2, and GRB2 are valid. The input capture and output compare functions can be used, and interrupts can be generated.

Phase counting is available only in channel 2.

Sample Setup Procedure for Phase Counting Mode: Figure 8.29 shows a sample procedure for setting up phase counting mode.

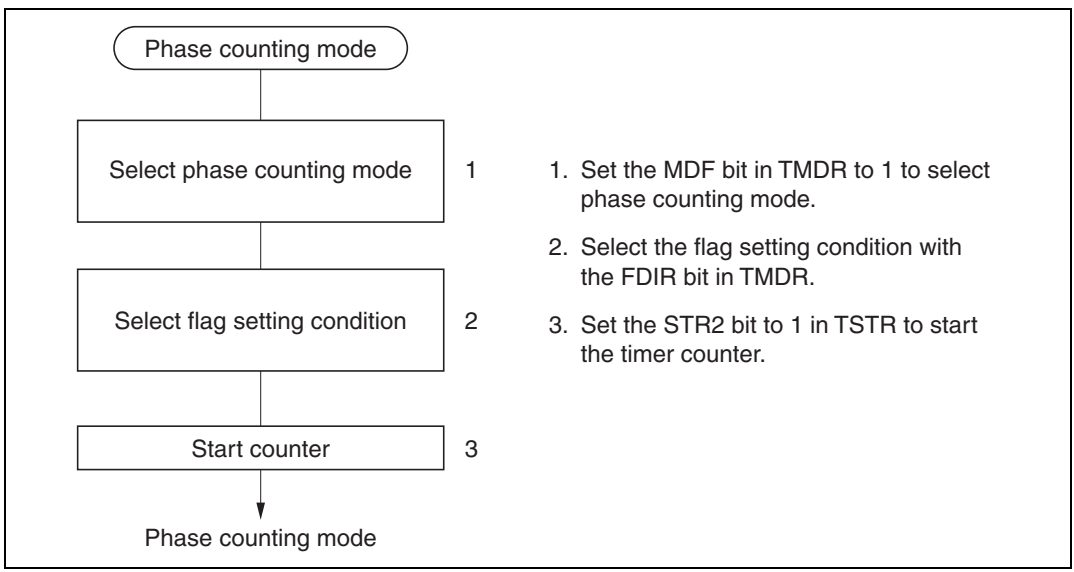

Figure 8.29 Setup Procedure for Phase Counting Mode (Example)

Example of Phase Counting Mode: Figure 8.30 shows an example of operations in phase counting mode. Table 8.5 lists the up-counting and down-counting conditions for 16TCNT2.

In phase counting mode both the rising and falling edges of TCLKA and TCLKB are counted. The phase difference between TCLKA and TCLKB must be at least 1.5 states, the phase overlap must also be at least 1.5 states, and the pulse width must be at least 2.5 states.

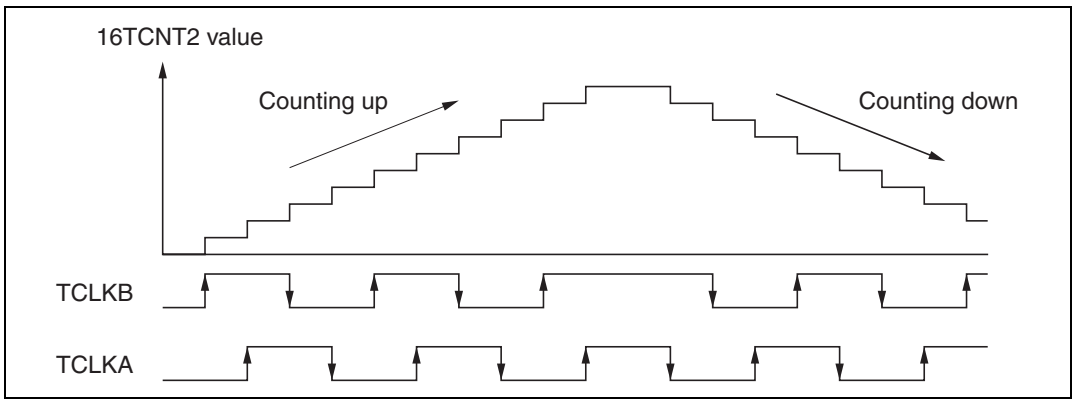

Figure 8.30 Operation in Phase Counting Mode (Example)

Table 8.5 Up/Down Counting Conditions

Counting Direction	Up-Counting				Down-Counting			
TCLKB pin	↑	High	↓	Low	High	↓	Low	↑
TCLKA pin	Low	↑	High	↓	↓	Low	↑	High

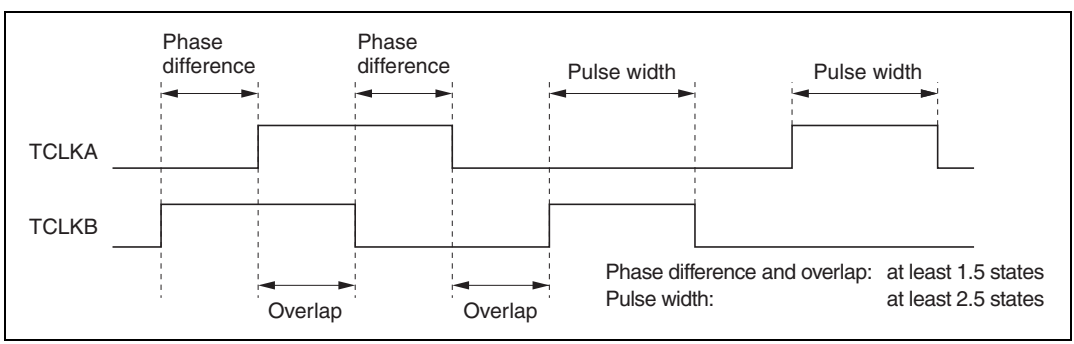

Figure 8.31 Phase Difference, Overlap, and Pulse Width in Phase Counting Mode

8.4.6 16-Bit Timer Output Timing

The initial value of 16-bit timer output when a timer count operation begins can be specified arbitrarily by making a setting in TOLR.

Figure 8.32 shows the timing for setting the initial value with TOLR.

Only write to TOLR when the corresponding bit in TSTR is cleared to 0.

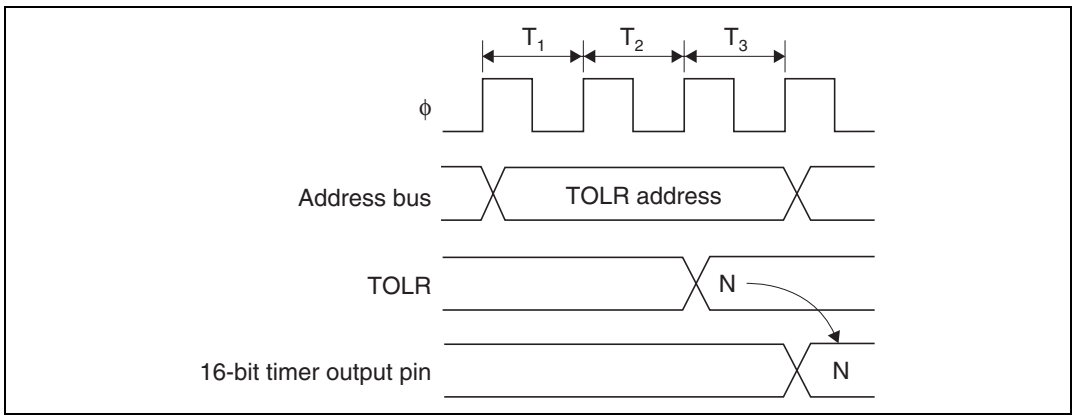

Figure 8.32 Timing for Setting 16-Bit Timer Output Level by Writing to TOLR

8.5 Interrupts

The 16-bit timer has two types of interrupts: input capture/compare match interrupts, and overflow interrupts.

8.5.1 Setting of Status Flags

Timing of Setting of IMFA and IMFB at Compare Match: IMFA and IMFB are set to 1 by a compare match signal generated when 16TCNT matches a general register (GR). The compare match signal is generated in the last state in which the values match (when 16TCNT is updated from the matching count to the next count). Therefore, when 16TCNT matches a general register, the compare match signal is not generated until the next 16TCNT clock input. Figure 8.33 shows the timing of the setting of IMFA and IMFB.

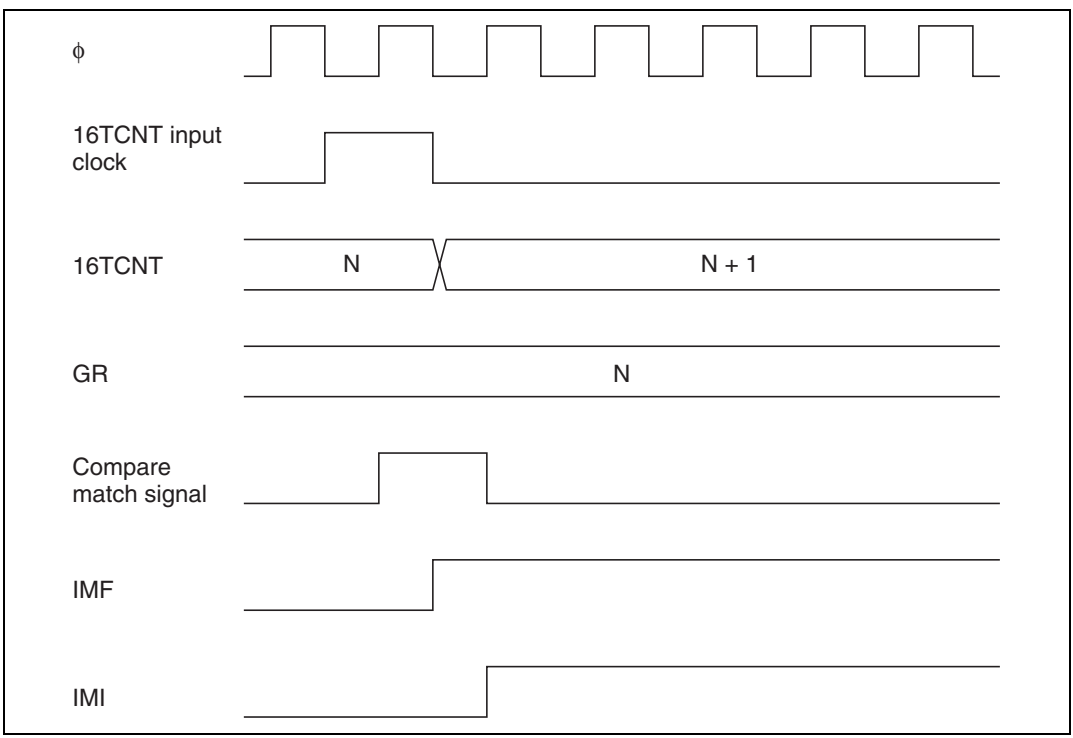

Figure 8.33 Timing of Setting of IMFA and IMFB by Compare Match

Timing of Setting of IMFA and IMFB by Input Capture: IMFA and IMFB are set to 1 by an input capture signal. The 16TCNT contents are simultaneously transferred to the corresponding general register. Figure 8.34 shows the timing.

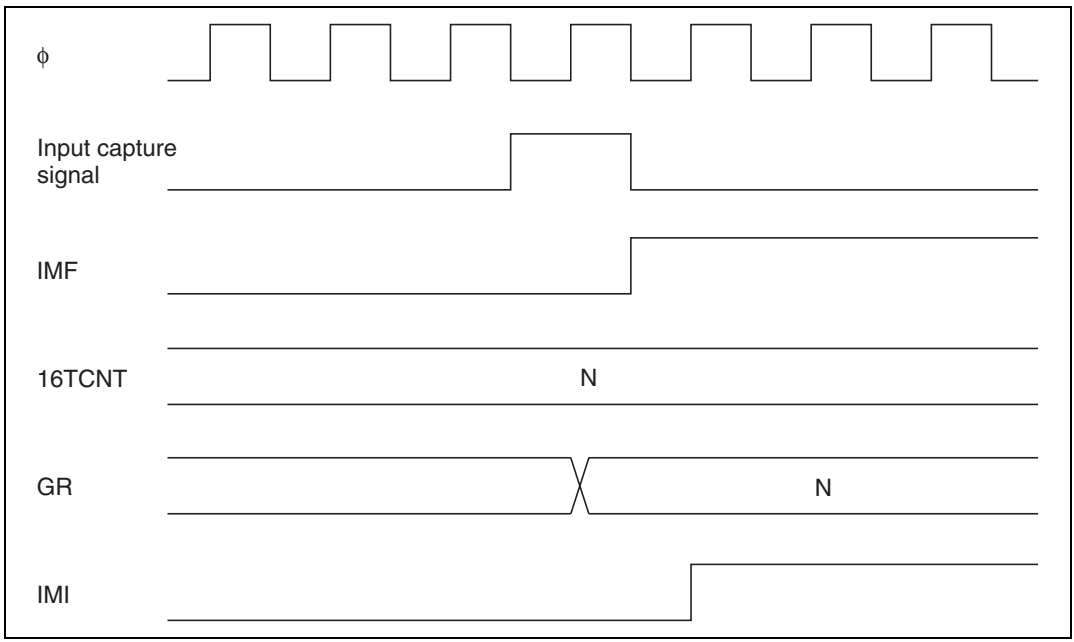

Figure 8.34 Timing of Setting of IMFA and IMFB by Input Capture

Timing of Setting of Overflow Flag (OVF): OVF is set to 1 when 16TCNT overflows from H'FFFF to H'0000 or underflows from H'0000 to H'FFFF. Figure 8.35 shows the timing.

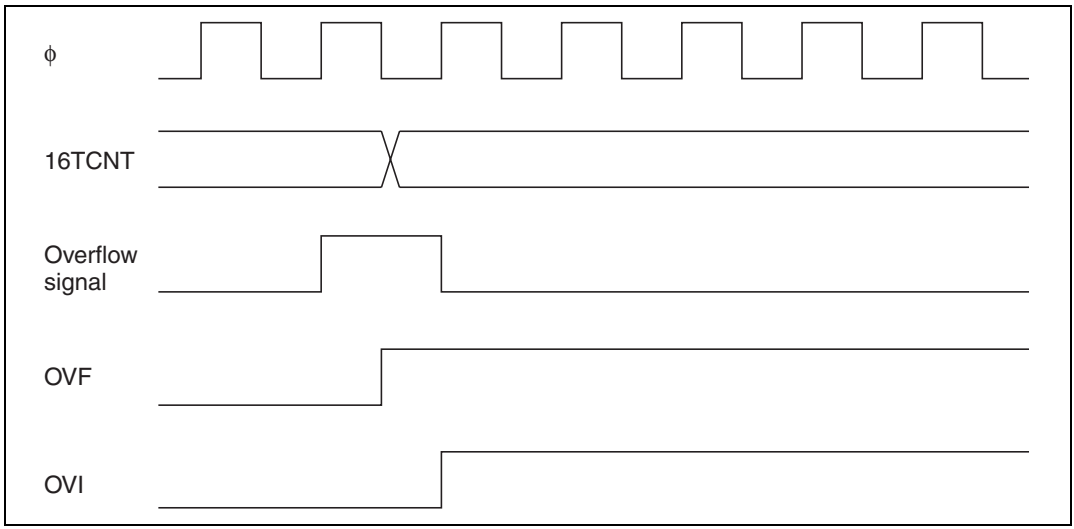

Figure 8.35 Timing of Setting of OVF

8.5.2 Timing of Clearing of Status Flags

If the CPU reads a status flag while it is set to 1, then writes 0 in the status flag, the status flag is cleared. Figure 8.36 shows the timing.

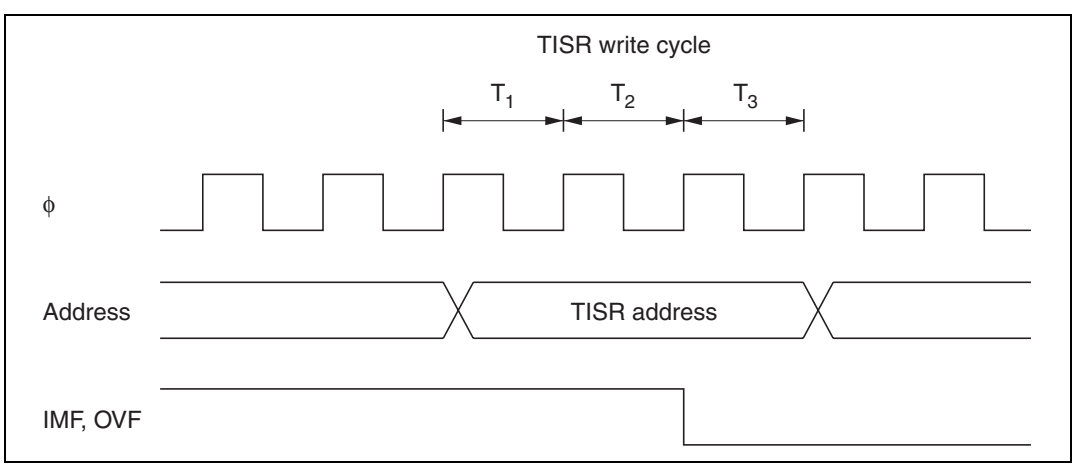

Figure 8.36 Timing of Clearing of Status Flags

8.5.3 Interrupt Sources

Each 16-bit timer channel can generate a compare match/input capture A interrupt, a compare match/input capture B interrupt, and an overflow interrupt. In total there are nine interrupt sources of three kinds, all independently vectored. An interrupt is requested when the interrupt request flag are set to 1.

The priority order of the channels can be modified in interrupt priority registers A (IPRA). For details see section 5, Interrupt Controller.

Table 8.6 lists the interrupt sources.

Table 8.6 16-bit timer Interrupt Sources

Channel	Interrupt Source	Description	Priority*
0	IMIA0	Compare match/input capture A0	High
	IMIB0	Compare match/input capture B0	↑
	OVI0	Overflow 0	
1	IMIA1	Compare match/input capture A1	
	IMIB1	Compare match/input capture B1	
	OVI1	Overflow 1	
2	IMIA2	Compare match/input capture A2	
	IMIB2	Compare match/input capture B2	
	OVI2	Overflow 2	Low

Note: * The priority immediately after a reset is indicated. Inter-channel priorities can be changed by settings in IPRA.

8.6 Usage Notes

This section describes contention and other matters requiring special attention during 16-bit timer operations.

Contention between 16TCNT Write and Clear: If a counter clear signal occurs in the T_3 state of a 16TCNT write cycle, clearing of the counter takes priority and the write is not performed. See figure 8.37.

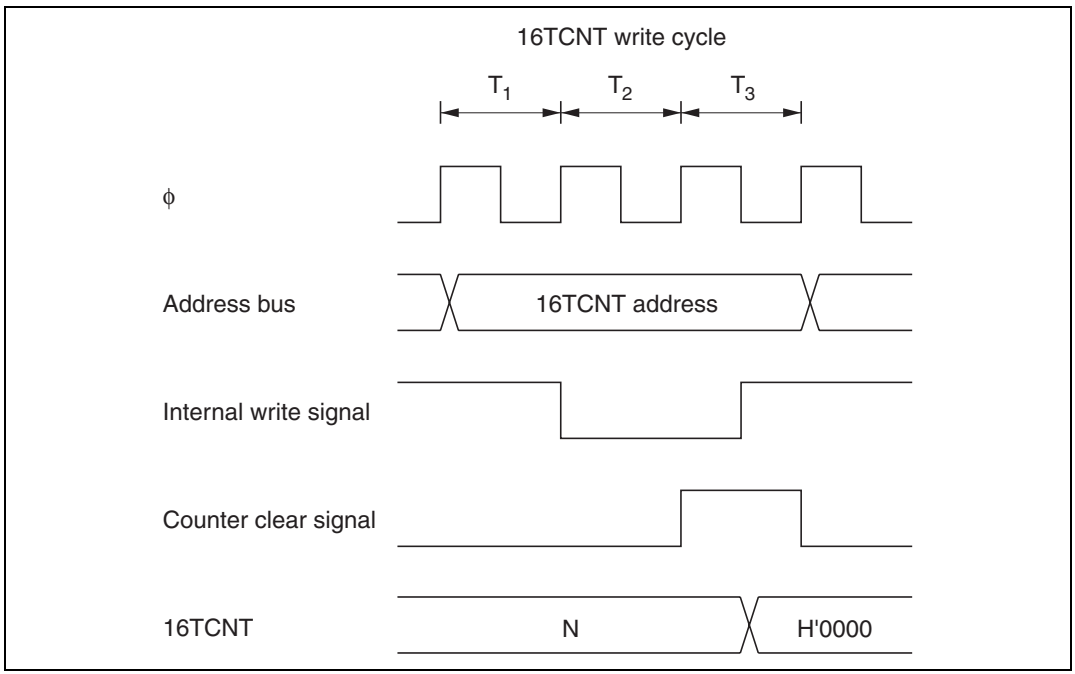

Figure 8.37 Contention between 16TCNT Write and Clear

Contention between 16TCNT Word Write and Increment: If an increment pulse occurs in the T_3 state of a 16TCNT word write cycle, writing takes priority and 16TCNT is not incremented. Figure 8.38 shows the timing in this case.

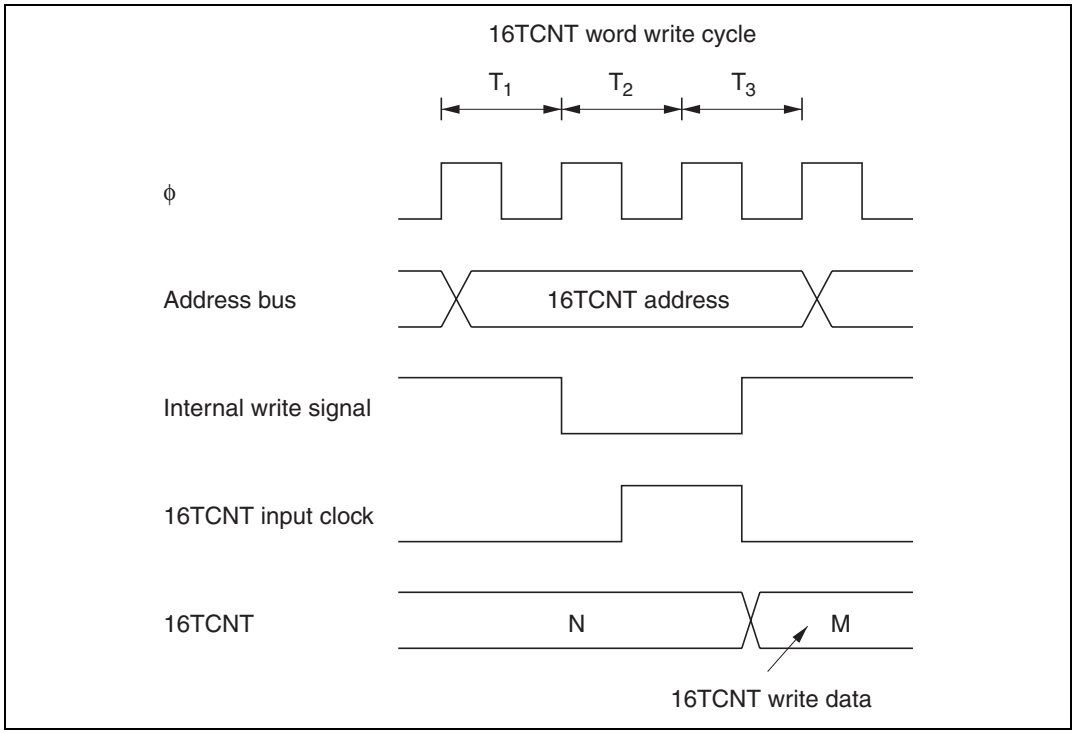

Figure 8.38 Contention between 16TCNT Word Write and Increment

Contention between 16TCNT Byte Write and Increment: If an increment pulse occurs in the T_2 or T_3 state of a 16TCNT byte write cycle, writing takes priority and 16TCNT is not incremented. The byte data for which a write was not performed is not incremented, and retains its pre-write value. See figure 8.39, which shows an increment pulse occurring in the T_2 state of a byte write to 16TCNTH.

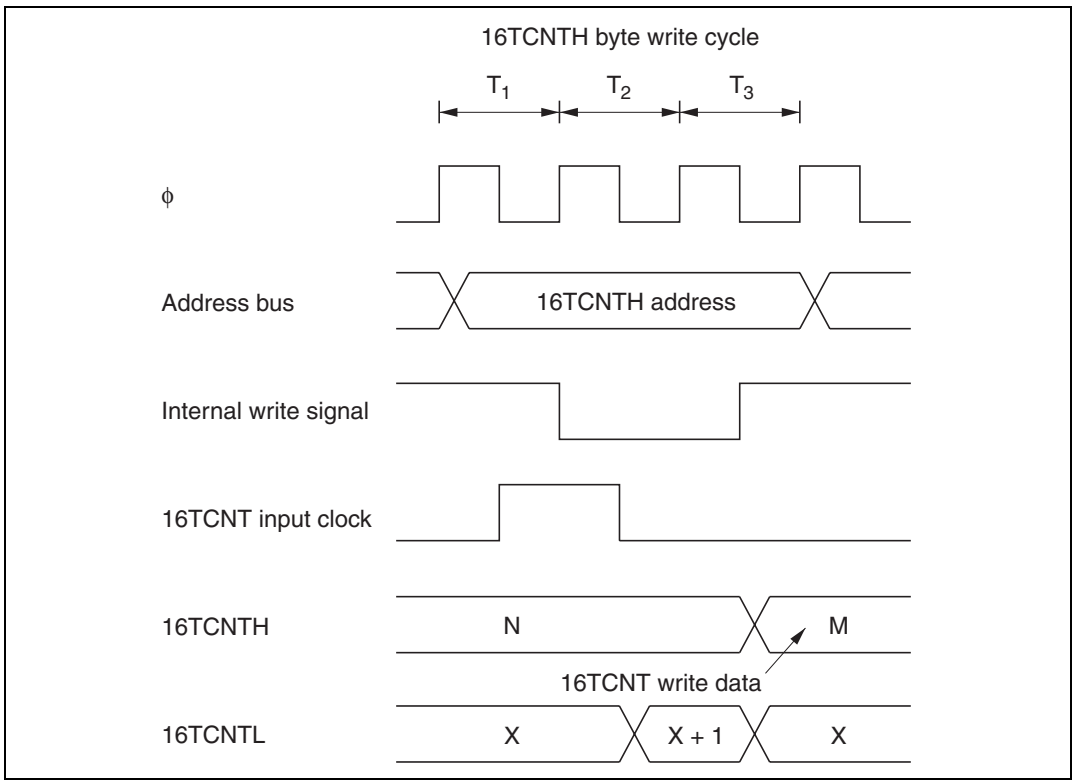

Figure 8.39 Contention between 16TCNT Byte Write and Increment

Contention between General Register Write and Compare Match: If a compare match occurs in the T_3 state of a general register write cycle, writing takes priority and the compare match signal is inhibited. See figure 8.40.

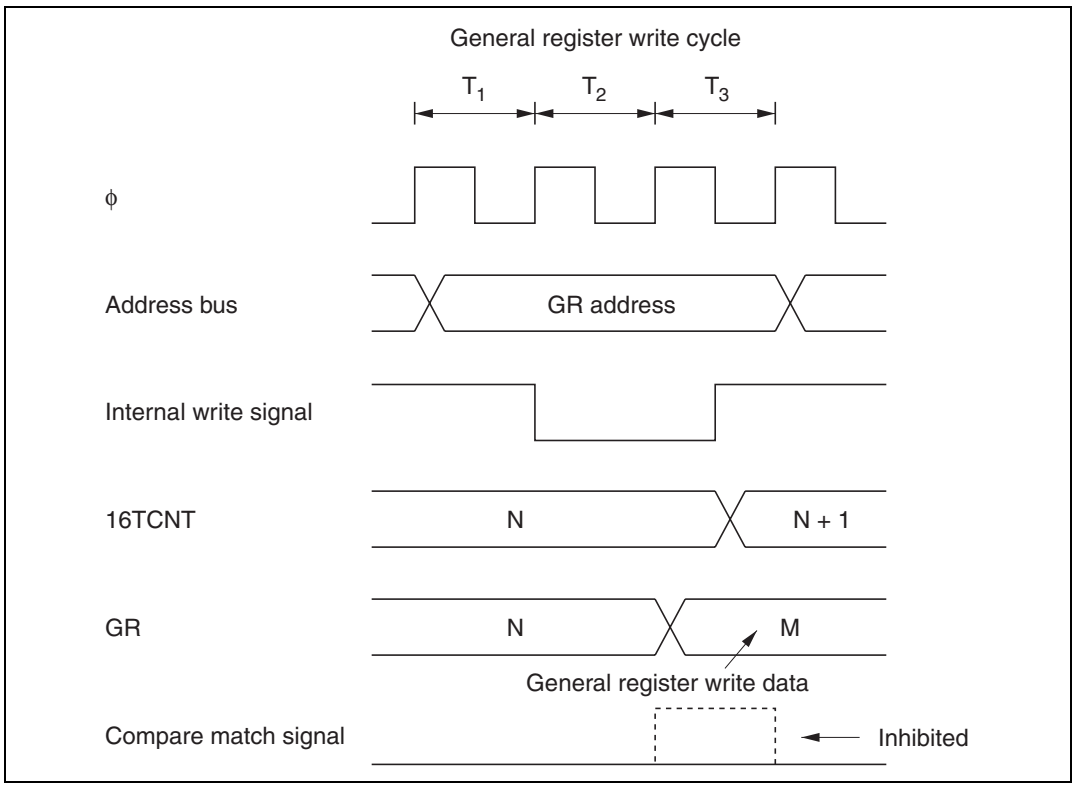

Figure 8.40 Contention between General Register Write and Compare Match

Contention between 16TCNT Write and Overflow or Underflow: If an overflow occurs in the T_3 state of a 16TCNT write cycle, writing takes priority and the counter is not incremented. OVF is set to 1.The same holds for underflow. See figure 8.41.

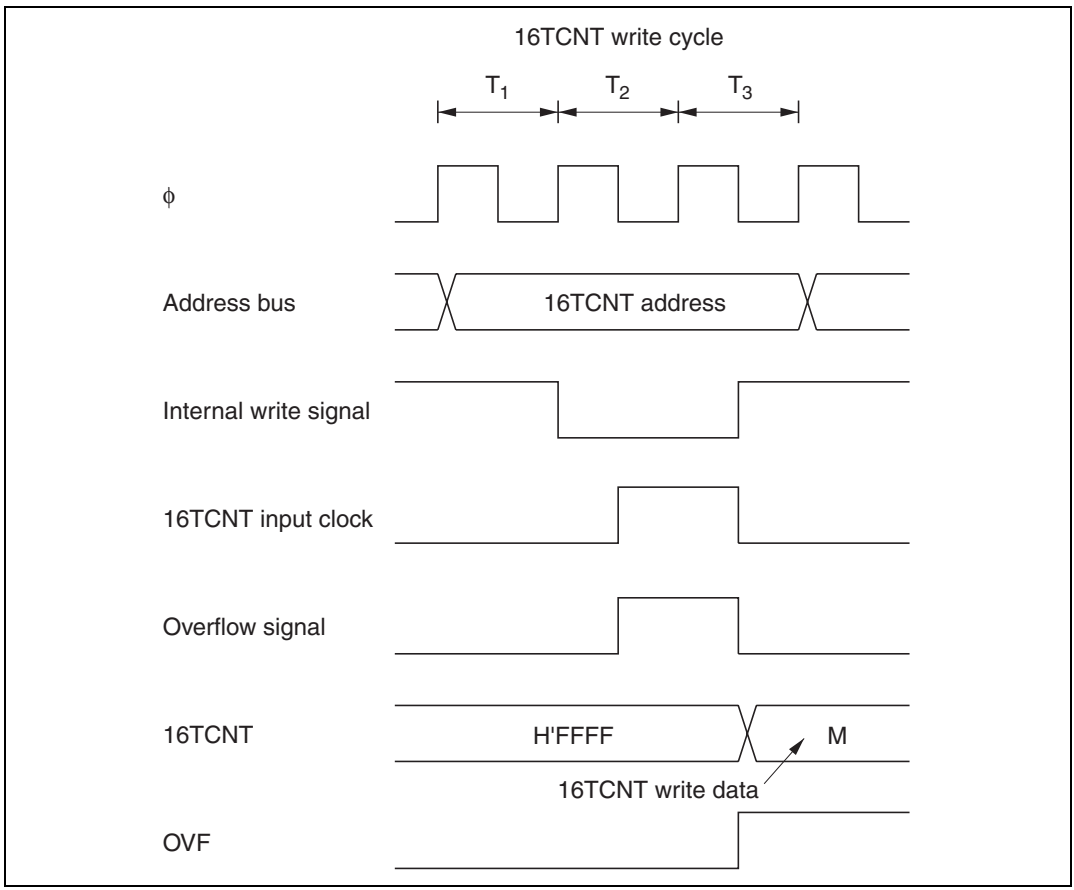

Figure 8.41 Contention between 16TCNT Write and Overflow

Contention between General Register Read and Input Capture: If an input capture signal occurs during the T_3 state of a general register read cycle, the value before input capture is read. See figure 8.42.

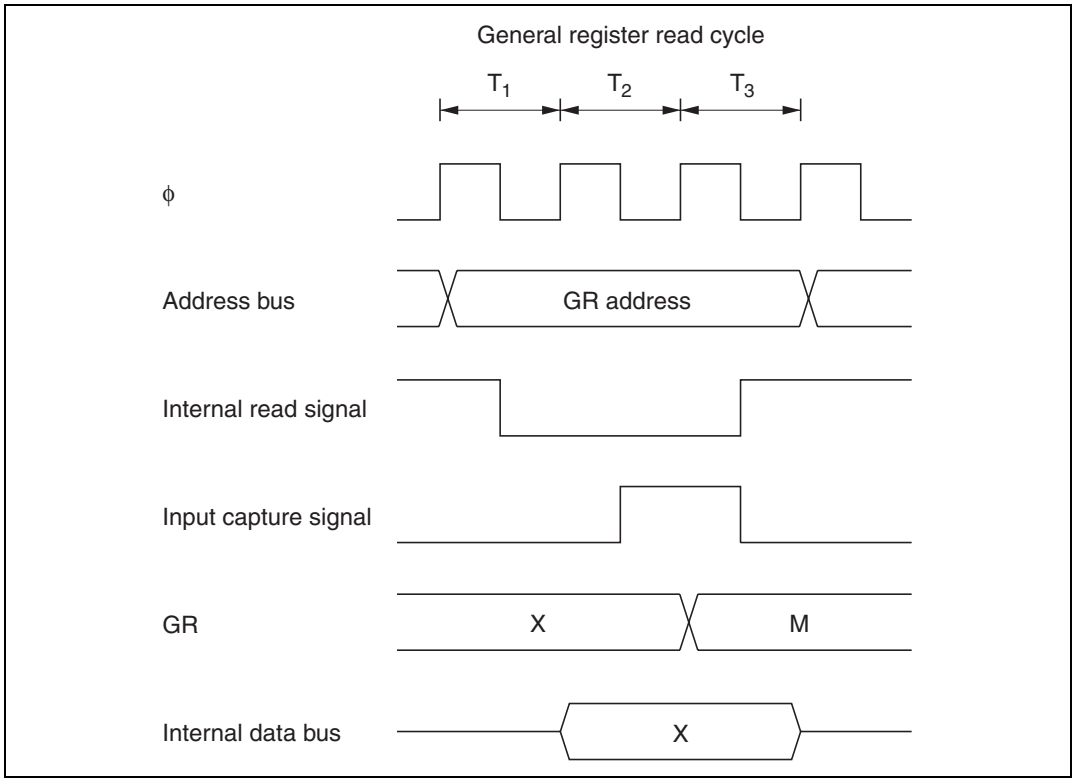

Figure 8.42 Contention between General Register Read and Input Capture

Contention between Counter Clearing by Input Capture and Counter Increment: If an input capture signal and counter increment signal occur simultaneously, the counter is cleared according to the input capture signal. The counter is not incremented by the increment signal. The value before the counter is cleared is transferred to the general register. See figure 8.43.

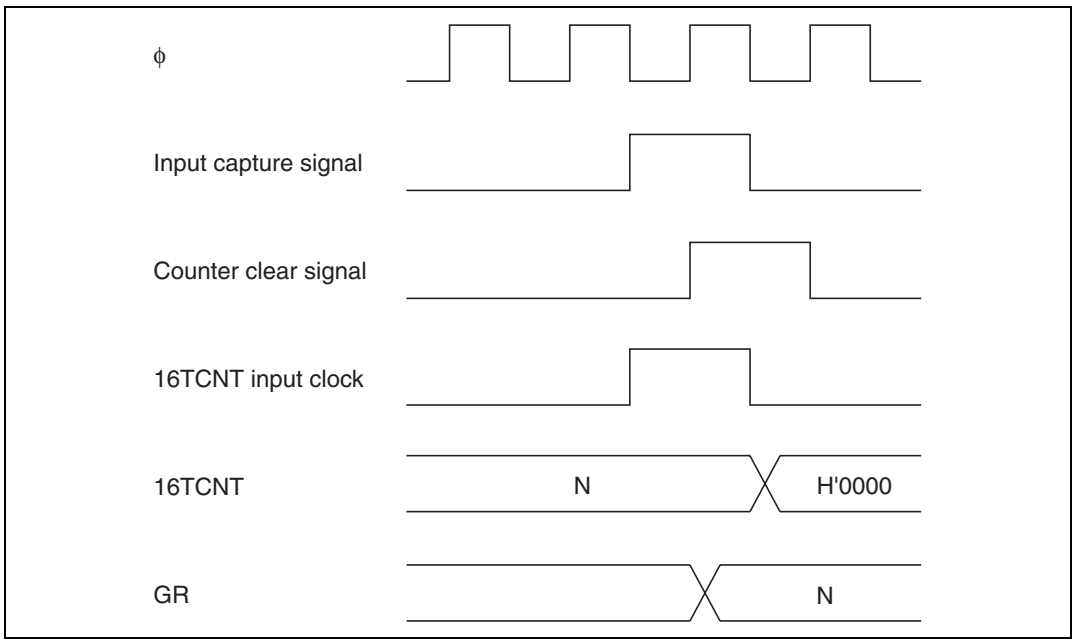

Figure 8.43 Contention between Counter Clearing by Input Capture and Counter Increment

Contention between General Register Write and Input Capture: If an input capture signal occurs in the T_3 state of a general register write cycle, input capture takes priority and the write to the general register is not performed. See figure 8.44.

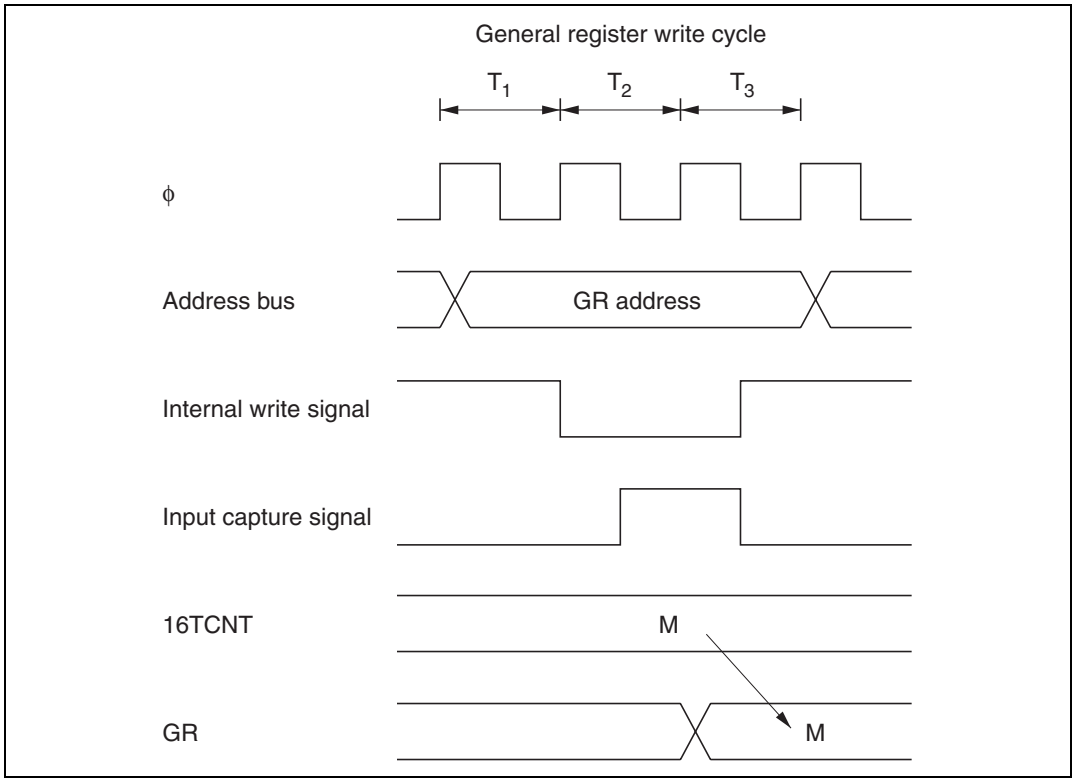

Figure 8.44 Contention between General Register Write and Input Capture

Note on Waveform Period Setting: When a counter is cleared by compare match, the counter is cleared in the last state at which the 16TCNT value matches the general register value, at the time when this value would normally be updated to the next count. The actual counter frequency is therefore given by the following formula:

$$f = \frac{\phi}{(N + 1)}$$

(f: counter frequency. ϕ: system clock frequency. N: value set in general register.)

Note on Writes in Synchronized Operation: When channels are synchronized, if a 16TCNT value is modified by byte write access, all 16 bits of all synchronized counters assume the same value as the counter that was addressed.

(Example) When channels 1 and 2 are synchronized

- Byte write to channel 1 or byte write to channel 2

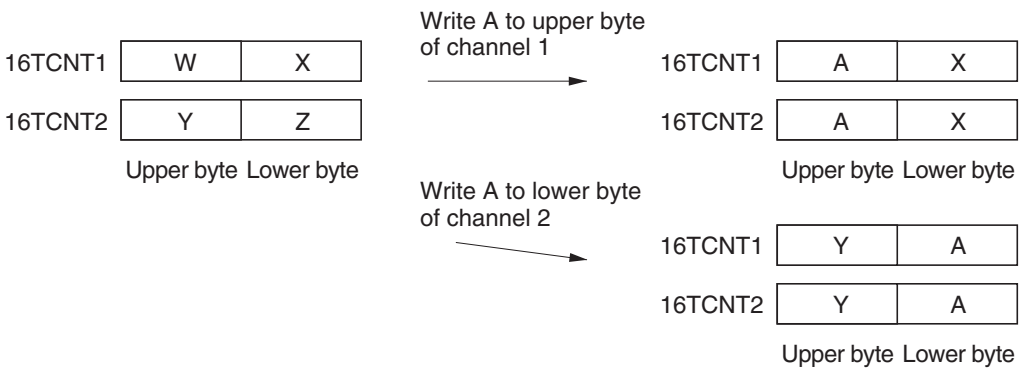

- Word write to channel 1 or word write to channel 2

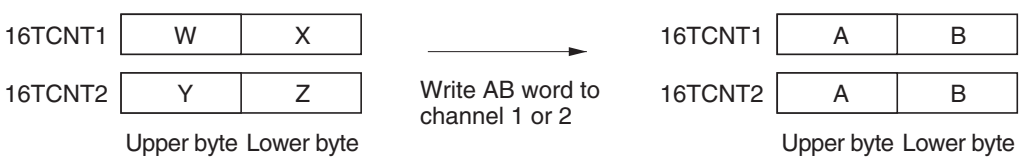

16-bit timer Operating Modes

Table 8.7 (a) 16-bit timer Operating Modes (Channel 0)

		Register Settings							
		TSNC	TMDR			TIOR0		16TCR0	
Operating Mode		Synchro-nization	MDF	FDIR	PWM	IOA	IOB	Clear Select	Clock Select
Synchronous preset		SYNC0 = 1	—	—	○	○	○	○	○
PWM mode		○	—	—	PWM0 = 1	—	○*	○	○
Output compare A		○	—	—	PWM0 = 0	IOA2 = 0 Other bits unrestricted	○	○	○
Output compare B		○	—	—	○	○	IOB2 = 0 Other bits unrestricted	○	○
Input capture A		○	—	—	PWM0 = 0	IOA2 = 1 Other bits unrestricted	○	○	○
Input capture B		○	—	—	PWM0 = 0	○	IOB2 = 1 Other bits unrestricted	○	○
Counter clearing	By compare match/input capture A	○	—	—	○	○	○	CCLR1 = 0 CCLR0 = 1	○
	By compare match/input capture B	○	—	—	○	○	○	CCLR1 = 1 CCLR0 = 0	○
	Syn-chronous clear	SYNC0 = 1	—	—	○	○	○	CCLR1 = 1 CCLR0 = 1	○

Legend:
○: Setting available (valid).
—: Setting does not affect this mode.

Note: * The input capture function cannot be used in PWM mode. If compare match A and compare match B occur simultaneously, the compare match signal is inhibited.

Table 8.7 (b) 16-bit timer Operating Modes (Channel 1)

		Register Settings							
		TSNC	TMDR			TIOR1		16TCR1	
Operating Mode		Synchro-nization	MDF	FDIR	PWM	IOA	IOB	Clear Select	Clock Select
Synchronous preset		SYNC1 = 1	—	—	○	○	○	○	○
PWM mode		○	—	—	PWM1 = 1	—	○*	○	○
Output compare A		○	—	—	PWM1 = 0	IOA2 = 0 Other bits unrestricted	○	○	○
Output compare B		○	—	—	○	○	IOB2 = 0 Other bits unrestricted	○	○
Input capture A		○	—	—	PWM1 = 0	IOA2 = 1 Other bits unrestricted	○	○	○
Input capture B		○	—	—	PWM1 = 0	○	IOB2 = 1 Other bits unrestricted	○	○
Counter clearing	By compare match/input capture A	○	—	—	○	○	○	CCLR1 = 0 CCLR0 = 1	○
	By compare match/input capture B	○	—	—	○	○	○	CCLR1 = 1 CCLR0 = 0	○
	Syn-chronous clear	SYNC1 = 1	—	—	○	○	○	CCLR1 = 1 CCLR0 = 1	○

Legend:
○: Setting available (valid).
—: Setting does not affect this mode.

Note: * The input capture function cannot be used in PWM mode. If compare match A and compare match B occur simultaneously, the compare match signal is inhibited.

Table 8.7 (c) 16-bit timer Operating Modes (Channel 2)

		Register Settings							
		TSNC	TMDR			TIOR2		16TCR2	
Operating Mode		Synchro-nization	MDF	FDIR	PWM	IOA	IOB	Clear Select	Clock Select
Synchronous preset		SYNC2 = 1	○	—	○	○	○	○	○
PWM mode		○	○	—	PWM2 = 1	—	○ *	○	○
Output compare A		○	○	—	PWM2 = 0	IOA2 = 0 Other bits unrestricted	○	○	○
Output compare B		○	○	—	○	○	IOB2 = 0 Other bits unrestricted	○	○
Input capture A		○	○	—	PWM2 = 0	IOA2 = 1 Other bits unrestricted	○	○	○
Input capture B		○	○	—	PWM2 = 0	○	IOB2 = 1 Other bits unrestricted	○	○
Counter clearing	By compare match/input capture A	○	○	—	○	○	○	CCLR1 = 0 CCLR0 = 1	○
	By compare match/input capture B	○	○	—	○	○	○	CCLR1 = 1 CCLR0 = 0	○
	Syn-chronous clear	SYNC2 = 1	○	—	○	○	○	CCLR1 = 1 CCLR0 = 1	○
Phase counting mode		○	MDF = 1	○	○	○	○	○	—

Legend:
○ : Setting available (valid).
—: Setting does not affect this mode.

Note: * The input capture function cannot be used in PWM mode. If compare match A and compare match B occur simultaneously, the compare match signal is inhibited.

Section 9 8-Bit Timers

9.1 Overview

The H8/3008 has a built-in 8-bit timer module with four channels (TMR0, TMR1, TMR2, and TMR3), based on 8-bit counters. Each channel has an 8-bit timer counter (8TCNT) and two 8-bit time constant registers (TCORA and TCORB) that are constantly compared with the 8TCNT value to detect compare match events. The timers can be used as multifunctional timers in a variety of applications, including the generation of a rectangular-wave output with an arbitrary duty cycle.

9.1.1 Features

The features of the 8-bit timer module are listed below.

- Selection of four clock sources

  The counters can be driven by one of three internal clock signals (ϕ/8, ϕ/64, or ϕ/8192) or an external clock input (enabling use as an external event counter).
- Selection of three ways to clear the counters

  The counters can be cleared on compare match A or B, or input capture B.
- Timer output controlled by two compare match signals

  The timer output signal in each channel is controlled by two independent compare match signals, enabling the timer to generate output waveforms with an arbitrary duty cycle or PWM output.
- A/D converter can be activated by a compare match
- Two channels can be cascaded
  - Channels 0 and 1 can be operated as the upper and lower halves of a 16-bit timer (16-bit count mode).
  - Channels 2 and 3 can be operated as the upper and lower halves of a 16-bit timer (16-bit count mode).
  - Channel 1 can count channel 0 compare match events (compare match count mode).
  - Channel 3 can count channel 2 compare match events (compare match count mode).
- Input capture function can be set

  8-bit or 16-bit input capture operation is available.
- Twelve interrupt sources

  There are twelve interrupt sources: four compare match sources, four compare match/input capture sources, four overflow sources.

Two of the compare match sources and two of the combined compare match/input capture sources each have an independent interrupt vector. The remaining compare match interrupts, combined compare match/input capture interrupts, and overflow interrupts have one interrupt vector for two sources.

9.1.2 Block Diagram

The 8-bit timers are divided into two groups of two channels each: group 0 comprising channels 0 and 1, and group 1 comprising channels 2 and 3. Figure 9.1 shows a block diagram of 8-bit timer group 0.

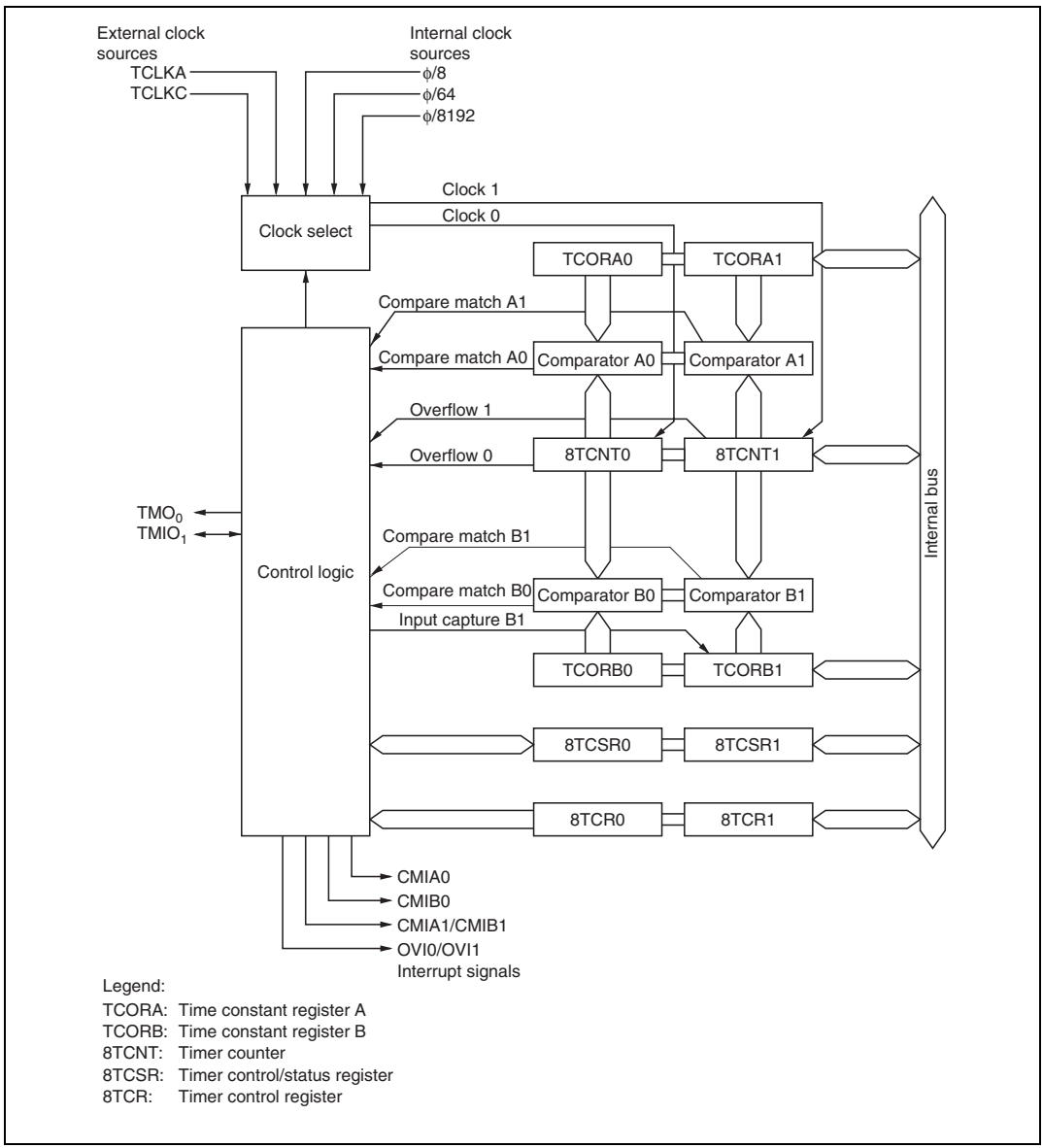

Figure 9.1 Block Diagram of 8-Bit Timer Unit (Two Channels: Group 0)

9.1.3 Pin Configuration

Table 9.1 summarizes the input/output pins of the 8-bit timer module.

Table 9.1 8-Bit Timer Pins

Group	Channel	Name	Abbreviation	I/O	Function
0	0	Timer output	TMO_0	Output	Compare match output
		Timer clock input	TCLKC	Input	Counter external clock input
	1	Timer input/output	$TMIO_1$	I/O	Compare match output/input capture input
		Timer clock input	TCLKA	Input	Counter external clock input
1	2	Timer output	TMO_2	Output	Compare match output
		Timer clock input	TCLKD	Input	Counter external clock input
	3	Timer input/output	$TMIO_3$	I/O	Compare match output/input capture input
		Timer clock input	TCLKB	Input	Counter external clock input

9.1.4 Register Configuration

Table 9.2 summarizes the registers of the 8-bit timer module.

Table 9.2 8-Bit Timer Registers

Channel	Address*[1]	Name	Abbreviation	R/W	Initial value
0	H'FFF80	Timer control register 0	8TCR0	R/W	H'00
	H'FFF82	Timer control/status register 0	8TCSR0	R/(W)*[2]	H'00
	H'FFF84	Time constant register A0	TCORA0	R/W	H'FF
	H'FFF86	Time constant register B0	TCORB0	R/W	H'FF
	H'FFF88	Timer counter 0	8TCNT0	R/W	H'00
1	H'FFF81	Timer control register 1	8TCR1	R/W	H'00
	H'FFF83	Timer control/status register 1	8TCSR1	R/(W)*[2]	H'00
	H'FFF85	Time constant register A1	TCORA1	R/W	H'FF
	H'FFF87	Time constant register B1	TCORB1	R/W	H'FF
	H'FFF89	Timer counter 1	8TCNT1	R/W	H'00
2	H'FFF90	Timer control register 2	8TCR2	R/W	H'00
	H'FFF92	Timer control/status register 2	8TCSR2	R/(W)*[2]	H'10
	H'FFF94	Time constant register A2	TCORA2	R/W	H'FF
	H'FFF96	Time constant register B2	TCORB2	R/W	H'FF
	H'FFF98	Timer counter 2	8TCNT2	R/W	H'00
3	H'FFF91	Timer control register 3	8TCR3	R/W	H'00
	H'FFF93	Timer control/status register 3	8TCSR3	R/(W)*[2]	H'00
	H'FFF95	Time constant register A3	TCORA3	R/W	H'FF
	H'FFF97	Time constant register B3	TCORB3	R/W	H'FF
	H'FFF99	Timer counter 3	8TCNT3	R/W	H'00

Notes: 1. Indicates the lower 20 bits of the address in advanced mode.
2. Only 0 can be written to bits 7 to 5, to clear these flags.

Each pair of registers for channel 0 and channel 1 comprises a 16-bit register with the channel 0 register as the upper 8 bits and the channel 1 register as the lower 8 bits, so they can be accessed together by word access.

Similarly, each pair of registers for channel 2 and channel 3 comprises a 16-bit register with the channel 2 register as the upper 8 bits and the channel 3 register as the lower 8 bits, so they can be accessed together by word access.

9.2 Register Descriptions

9.2.1 Timer Counters (8TCNT)

	8TCNT0								8TCNT1							
Bit	15	14	13	12	11	10	9	8	7	6	5	4	3	2	1	0
Initial value	0	0	0	0	0	0	0	0	0	0	0	0	0	0	0	0
Read/Write	R/W	R/W	R/W	R/W	R/W	R/W	R/W	R/W	R/W	R/W	R/W	R/W	R/W	R/W	R/W	R/W

	8TCNT2								8TCNT3							
Bit	15	14	13	12	11	10	9	8	7	6	5	4	3	2	1	0
Initial value	0	0	0	0	0	0	0	0	0	0	0	0	0	0	0	0
Read/Write	R/W	R/W	R/W	R/W	R/W	R/W	R/W	R/W	R/W	R/W	R/W	R/W	R/W	R/W	R/W	R/W

The timer counters (8TCNT) are 8-bit readable/writable up-counters that increment on pulses generated from an internal or external clock source. The clock source is selected by clock select bits 2 to 0 (CKS2 to CKS0) in the timer control register (8TCR). The CPU can always read or write to the timer counters.

The 8TCNT0 and 8TCNT1 pair, and the 8TCNT2 and 8TCNT3 pair, can each be accessed as a 16-bit register by word access.

8TCNT can be cleared by an input capture signal or compare match signal. Counter clear bits 1 and 0 (CCLR1 and CCLR0) in 8TCR select the method of clearing.

When 8TCNT overflows from H'FF to H'00, the overflow flag (OVF) in the timer control/status register (8TCSR) is set to 1.

Each 8TCNT is initialized to H'00 by a reset and in standby mode.

9.2.2 Time Constant Registers A (TCORA)

TCORA0 to TCORA3 are 8-bit readable/writable registers.

	TCORA0								TCORA1							
Bit	15	14	13	12	11	10	9	8	7	6	5	4	3	2	1	0
Initial value	1	1	1	1	1	1	1	1	1	1	1	1	1	1	1	1
Read/Write	R/W	R/W	R/W	R/W	R/W	R/W	R/W	R/W	R/W	R/W	R/W	R/W	R/W	R/W	R/W	R/W

	TCORA2								TCORA3							
Bit	15	14	13	12	11	10	9	8	7	6	5	4	3	2	1	0
Initial value	1	1	1	1	1	1	1	1	1	1	1	1	1	1	1	1
Read/Write	R/W	R/W	R/W	R/W	R/W	R/W	R/W	R/W	R/W	R/W	R/W	R/W	R/W	R/W	R/W	R/W

The TCORA0 and TCORA1 pair, and the TCORA2 and TCORA3 pair, can each be accessed as a 16-bit register by word access.

The TCORA value is constantly compared with the 8TCNT value. When a match is detected, the corresponding compare match flag A (CMFA) is set to 1 in 8TCSR.

The timer output can be freely controlled by these compare match signals and the settings of output select bits 1 and 0 (OS1, OS0) in 8TCSR.

Each TCORA register is initialized to H'FF by a reset and in standby mode.

9.2.3 Time Constant Registers B (TCORB)

	TCORB0								TCORB1							
Bit	15	14	13	12	11	10	9	8	7	6	5	4	3	2	1	0
Initial value	1	1	1	1	1	1	1	1	1	1	1	1	1	1	1	1
Read/Write	R/W	R/W	R/W	R/W	R/W	R/W	R/W	R/W	R/W	R/W	R/W	R/W	R/W	R/W	R/W	R/W

	TCORB2								TCORB3							
Bit	15	14	13	12	11	10	9	8	7	6	5	4	3	2	1	0
Initial value	1	1	1	1	1	1	1	1	1	1	1	1	1	1	1	1
Read/Write	R/W	R/W	R/W	R/W	R/W	R/W	R/W	R/W	R/W	R/W	R/W	R/W	R/W	R/W	R/W	R/W

TCORB0 to TCORB3 are 8-bit readable/writable registers. The TCORB0 and TCORB1 pair, and the TCORB2 and TCORB3 pair, can each be accessed as a 16-bit register by word access.

The TCORB value is constantly compared with the 8TCNT value. When a match is detected, the corresponding compare match flag B (CMFB) is set to 1 in 8TCSR*.

The timer output can be freely controlled by these compare match signals and the settings of output/input capture edge select bits 3 and 2 (OIS3, OIS2) in 8TCSR.

When TCORB is used for input capture, it stores the 8TCNT value on detection of an external input capture signal. At this time, the CMFB flag is set to 1 in the corresponding 8TCSR register. The detected edge of the input capture signal is set in 8TCSR.

Each TCORB register is initialized to H'FF by a reset and in standby mode.

Note: * When channel 1 and channel 3 are designated for TCORB input capture, the CMFB flag is not set by a channel 0 or channel 2 compare match B.

9.2.4 Timer Control Register (8TCR)

Bit	7	6	5	4	3	2	1	0
	CMIEB	CMIEA	OVIE	CCLR1	CCLR0	CKS2	CKS1	CKS0
Initial value	0	0	0	0	0	0	0	0
Read/Write	R/W	R/W	R/W	R/W	R/W	R/W	R/W	R/W

8TCR is an 8-bit readable/writable register that selects the 8TCNT input clock, gives the 8TCNT clearing specification, and enables interrupt requests.

8TCR is initialized to H'00 by a reset and in standby mode.

For the timing, see section 9.4, Operation.

Bit 7—Compare Match Interrupt Enable B (CMIEB): Enables or disables the CMIB interrupt request when the CMFB flag is set to 1 in 8TCSR.

Bit 7 CMIEB	Description	
0	CMIB interrupt requested by CMFB is disabled	(Initial value)
1	CMIB interrupt requested by CMFB is enabled	

Bit 6—Compare Match Interrupt Enable A (CMIEA): Enables or disables the CMIA interrupt request when the CMFA flag is set to 1 in 8TCSR.

Bit 6 CMIEA	Description	
0	CMIA interrupt requested by CMFA is disabled	(Initial value)
1	CMIA interrupt requested by CMFA is enabled	

Bit 5—Timer Overflow Interrupt Enable (OVIE): Enables or disables the OVI interrupt request when the OVF flag is set to 1 in 8TCSR.

Bit 5 OVIE	Description	
0	OVI interrupt requested by OVF is disabled	(Initial value)
1	OVI interrupt requested by OVF is enabled	

Bits 4 and 3—Counter Clear 1 and 0 (CCLR1, CCLR0): These bits specify the 8TCNT clearing source. Compare match A or B, or input capture B, can be selected as the clearing source.

Bit 4 CCLR1	Bit 3 CCLR0	Description	
0	0	Clearing is disabled	(Initial value)
	1	Cleared by compare match A	
1	0	Cleared by compare match B/input capture B	
	1	Cleared by input capture B	

Note: When input capture B is set as the 8TCNT1 and 8TCNT3 counter clear source, 8TCNT0 and 8TCNT2 are not cleared by compare match B.

Bits 2 to 0—Clock Select 2 to 0 (CSK2 to CSK0): These bits select whether the clock input to 8TCNT is an internal or external clock.

Three internal clocks can be selected, all divided from the system clock (ϕ): ϕ/8, ϕ/64, and ϕ/8192. The rising edge of the selected internal clock triggers the count.

When use of an external clock is selected, three types of count can be selected: at the rising edge, the falling edge, and both rising and falling edges.

When CKS2, CKS1, CKS0 = 1, 0, 0, channels 0 and 1 and channels 2 and 3 are cascaded.

The incrementing clock source is different when 8TCR0 and 8TCR2 are set, and when 8TCR1 and 8TCR3 are set.

Bit 2 CSK2	Bit 1 CSK1	Bit 0 CSK0	Description
0	0	0	Clock input disabled (Initial value)
		1	Internal clock, counted on falling edge of $\phi/8$
	1	0	Internal clock, counted on falling edge of $\phi/64$
		1	Internal clock, counted on falling edge of $\phi/8192$
1	0	0	Channel 0 (16-bit count mode): Count on 8TCNT1 overflow signal*[1] Channel 1 (compare match count mode): Count on 8TCNT0 compare match A*[1] Channel 2 (16-bit count mode): Count on 8TCNT3 overflow signal*[2] Channel 3 (compare match count mode): Count on 8TCNT2 compare match A*[2]
		1	External clock, counted on rising edge
	1	0	External clock, counted on falling edge
		1	External clock, counted on both rising and falling edges

Notes: 1. If the clock input of channel 0 is the 8TCNT1 overflow signal and that of channel 1 is the 8TCNT0 compare match signal, no incrementing clock is generated. Do not use this setting.

2. If the clock input of channel 2 is the 8TCNT3 overflow signal and that of channel 3 is the 8TCNT2 compare match signal, no incrementing clock is generated. Do not use this setting.

9.2.5 Timer Control/Status Registers (8TCSR)

8TCSR0

Bit	7	6	5	4	3	2	1	0
	CMFB	CMFA	OVF	ADTE	OIS3	OIS2	OS1	OS0
Initial value	0	0	0	0	0	0	0	0
Read/Write	R/(W)*	R/(W)*	R/(W)*	R/W	R/W	R/W	R/W	R/W

8TCSR2

Bit	7	6	5	4	3	2	1	0
	CMFB	CMFA	OVF	—	OIS3	OIS2	OS1	OS0
Initial value	0	0	0	1	0	0	0	0
Read/Write	R/(W)*	R/(W)*	R/(W)*	—	R/W	R/W	R/W	R/W

8TCSR1, 8TCSR3

Bit	7	6	5	4	3	2	1	0
	CMFB	CMFA	OVF	ICE	OIS3	OIS2	OS1	OS0
Initial value	0	0	0	0	0	0	0	0
Read/Write	R/(W)*	R/(W)*	R/(W)*	R/W	R/W	R/W	R/W	R/W

Note: * Only 0 can be written to bits 7 to 5, to clear these flags.

The timer control/status registers 8TCSR are 8-bit registers that indicate compare match/input capture and overflow statuses, and control compare match output/input capture edge selection.

8TCSR2 is initialized to H'10, and 8TCSR0, 8TCSR1, and 8TCSR3 to H'00, by a reset and in standby mode.

Bit 7—Compare Match/Input Capture Flag B (CMFB): Status flag that indicates the occurrence of a TCORB compare match or input capture.

Bit 7 CMFB	Description
0	[Clearing condition] (Initial value) Read CMFB when CMFB = 1, then write 0 in CMFB
1	[Setting conditions] • 8TCNT = TCORB* • The 8TCNT value is transferred to TCORB by an input capture signal when TCORB functions as an input capture register

Note: * When bit ICE is set to 1 in 8TCSR1 and 8TCSR3, the CMFB flag is not set when 8TCNT0 = TCORB0 or 8TCNT2 = TCORB2.

Bit 6—Compare Match Flag A (CMFA): Status flag that indicates the occurrence of a TCORA compare match.

Bit 6 CMFA	Description
0	[Clearing condition] (Initial value) Read CMFA when CMFA = 1, then write 0 in CMFA
1	[Setting condition] 8TCNT = TCORA

Bit 5—Timer Overflow Flag (OVF): Status flag that indicates that the 8TCNT has overflowed from H'FF to H'00.

Bit 5 OVF	Description
0	[Clearing condition] (Initial value) Read OVF when OVF = 1, then write 0 in OVF
1	[Setting condition] 8TCNT overflows from H'FF to H'00

Bit 4—A/D Trigger Enable (ADTE) (In 8TCSR0): In combination with TRGE in the A/D control register (ADCR), enables or disables A/D converter start requests by compare match A or an external trigger.

TRGE*	Bit 4 ADTE	Description
0	0	A/D converter start requests by compare match A or external trigger pin ($\overline{\text{ADTRG}}$) input are disabled (Initial value)
	1	A/D converter start requests by compare match A or external trigger pin ($\overline{\text{ADTRG}}$) input are disabled
1	0	A/D converter start requests by external trigger pin ($\overline{\text{ADTRG}}$) input are enabled, and A/D converter start requests by compare match A are disabled
	1	A/D converter start requests by compare match A are enabled, and A/D converter start requests by external trigger pin ($\overline{\text{ADTRG}}$) input are disabled

Note: * TRGE is bit 7 of the A/D control register (ADCR).

Bit 4—Reserved (In 8TCSR1): This bit is a reserved bit, but can be read and written.

Bit 4—Input Capture Enable (ICE) (In 8TCSR1 and 8TCSR3): Selects the function of TCORB1 and TCORB3.

Bit 4 ICE	Description
0	TCORB1 and TCORB3 are compare match registers (Initial value)
1	TCORB1 and TCORB3 are input capture registers

When bit ICE is set to 1 in 8TCSR1 or 8TCSR3, the operation of the TCORA and TCORB registers in channels 0 to 3 is as shown in the tables below.

Table 9.3 Operation of Channels 0 and 1 when Bit ICE is Set to 1 in 8TCSR1 Register

Register	Register Function	Status Flag Change	Timer Output Capture Input	Interrupt Request
TCORA0	Compare match operation	CMFA changed from 0 to 1 in 8TCSR0 by compare match	TMO_0 output controllable	CMIA0 interrupt request generated by compare match
TCORB0	Compare match operation	CMFB not changed from 0 to 1 in 8TCSR0 by compare match	No output from TMO_0	CMIB0 interrupt request not generated by compare match
TCORA1	Compare match operation	CMFA changed from 0 to 1 in 8TCSR1 by compare match	$TMIO_1$ is dedicated input capture pin	CMIA1 interrupt request generated by compare match
TCORB1	Input capture operation	CMFB changed from 0 to 1 in 8TCSR1 by input capture	$TMIO_1$ is dedicated input capture pin	CMIB1 interrupt request generated by input capture

Table 9.4 Operation of Channels 2 and 3 when Bit ICE is Set to 1 in 8TCSR3 Register

Register	Register Function	Status Flag Change	Timer Output Capture Input	Interrupt Request
TCORA2	Compare match operation	CMFA changed from 0 to 1 in 8TCSR2 by compare match	TMO_2 output controllable	CMIA2 interrupt request generated by compare match
TCORB2	Compare match operation	CMFB not changed from 0 to 1 in 8TCSR2 by compare match	No output from TMO_2	CMIB2 interrupt request not generated by compare match
TCORA3	Compare match operation	CMFA changed from 0 to 1 in 8TCSR3 by compare match	$TMIO_3$ is dedicated input capture pin	CMIA3 interrupt request generated by compare match
TCORB3	Input capture operation	CMFB changed from 0 to 1 in 8TCSR3 by input capture	$TMIO_3$ is dedicated input capture pin	CMIB3 interrupt request generated by input capture

Bits 3 and 2—Output/Input Capture Edge Select B3 and B2 (OIS3, OIS2): In combination with the ICE bit in 8TCSR1 (8TCSR3), these bits select the compare match B output level or the input capture input detected edge.

The function of TCORB1 (TCORB3) depends on the setting of bit 4 of 8TCSR1 (8TCSR3).

ICE Bit in 8TCSR1 (8TCSR3)	Bit 3 OIS3	Bit 2 OIS2	Description
0	0	0	No change when compare match B occurs (Initial value)
		1	0 is output when compare match B occurs
	1	0	1 is output when compare match B occurs
		1	Output is inverted when compare match B occurs (toggle output)
1	0	0	TCORB input capture on rising edge
		1	TCORB input capture on falling edge
	1	0	TCORB input capture on both rising and falling edges
		1	

- When the compare match register function is used, the timer output priority order is: toggle output > 1 output > 0 output.
- If compare match A and B occur simultaneously, the output changes in accordance with the higher-priority compare match.
- When bits OIS3, OIS2, OS1, and OS0 are all cleared to 0, timer output is disabled.

Bits 1 and 0—Output Select A1 and A0 (OS1, OS0): These bits select the compare match A output level.

Bit 1 OS1	Bit 0 OS0	Description
0	0	No change when compare match A occurs (Initial value)
	1	0 is output when compare match A occurs
1	0	1 is output when compare match A occurs
	1	Output is inverted when compare match A occurs (toggle output)

- When the compare match register function is used, the timer output priority order is: toggle output > 1 output > 0 output.
- If compare match A and B occur simultaneously, the output changes in accordance with the higher-priority compare match.
- When bits OIS3, OIS2, OS1, and OS0 are all cleared to 0, timer output is disabled.

9.3 CPU Interface

9.3.1 8-Bit Registers

8TCNT, TCORA, TCORB, 8TCR, and 8TCSR are 8-bit registers. These registers are connected to the CPU by an internal 16-bit data bus and can be read and written a word at a time or a byte at a time.

Figures 9.2 and 9.3 show the operation in word read and write accesses to 8TCNT.

Figures 9.4 to 9.7 show the operation in byte read and write accesses to 8TCNT0 and 8TCNT1.

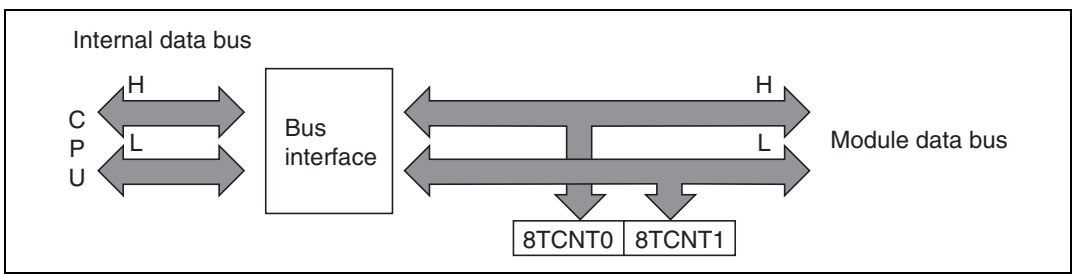

Figure 9.2 8TCNT Access Operation (CPU Writes to 8TCNT, Word)

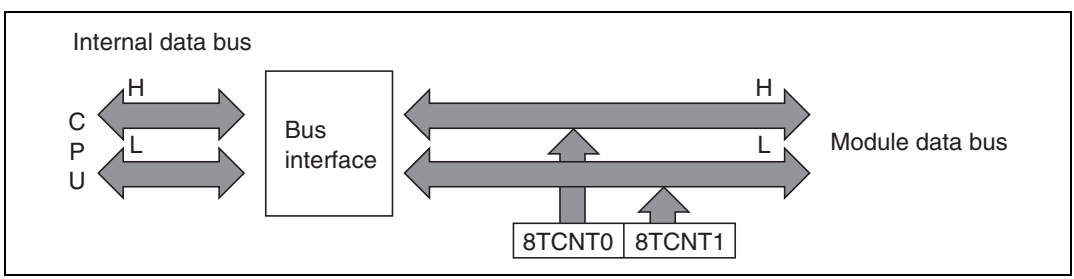

Figure 9.3 8TCNT Access Operation (CPU Reads 8TCNT, Word)

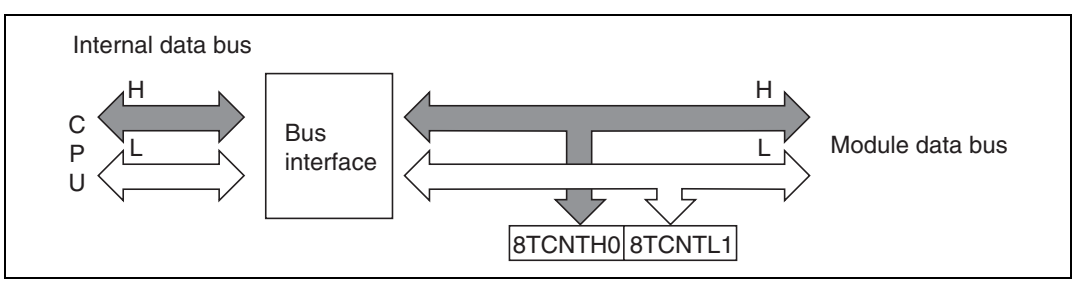

Figure 9.4 8TCNT0 Access Operation (CPU Writes to 8TCNT0, Upper Byte)

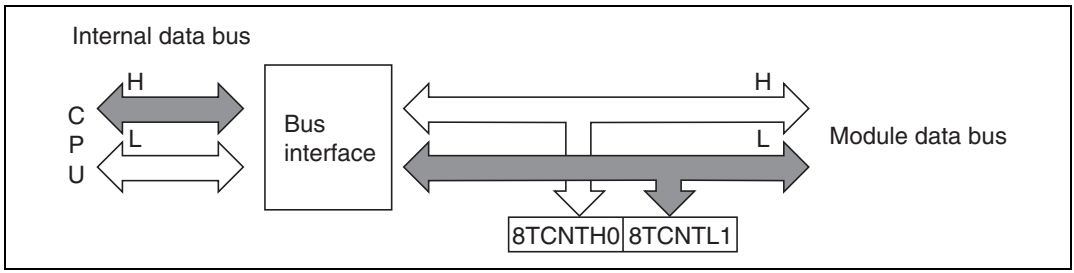

Figure 9.5 8TCNT1 Access Operation (CPU Writes to 8TCNT1, Lower Byte)

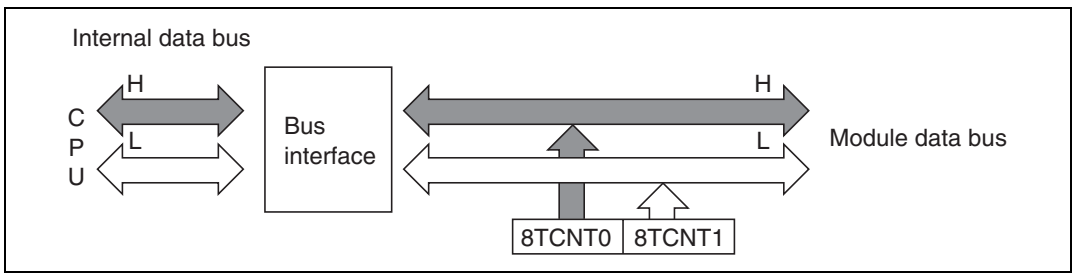

Figure 9.6 8TCNT0 Access Operation (CPU Reads 8TCNT0, Upper Byte)

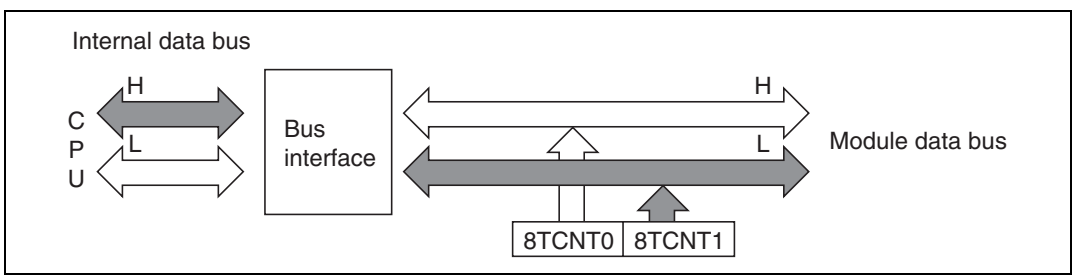

Figure 9.7 8TCNT1 Access Operation (CPU Reads 8TCNT1, Lower Byte)

9.4 Operation

9.4.1 8TCNT Count Timing

8TCNT is incremented by input clock pulses (either internal or external).

Internal Clock: Three different internal clock signals (ϕ/8, ϕ/64, or ϕ/8192) divided from the system clock (ϕ) can be selected, by setting bits CKS2 to CKS0 in 8TCR. Figure 9.8 shows the count timing.

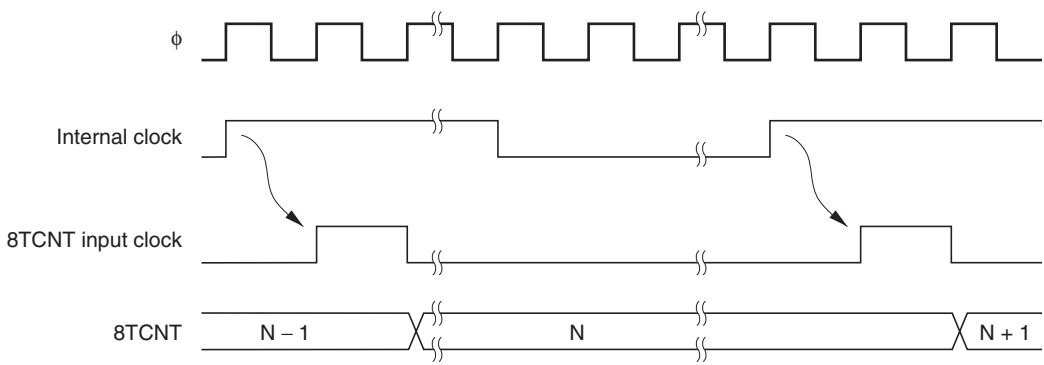

Note: Even if the same internal clock is selected for the 16-bit timer and the 8-bit timer, the same operation will not be performed since the incrementing edge is different in each case.

Figure 9.8 Count Timing for Internal Clock Input

External Clock: Three incrementation methods can be selected by setting bits CKS2 to CKS0 in 8TCR: on the rising edge, the falling edge, and both rising and falling edges.

The pulse width of the external clock signal must be at least 1.5 system clocks when a single edge is selected, and at least 2.5 system clocks when both edges are selected. Shorter pulses will not be counted correctly.

Figure 9.9 shows the timing for incrementation on both edges of the external clock signal.

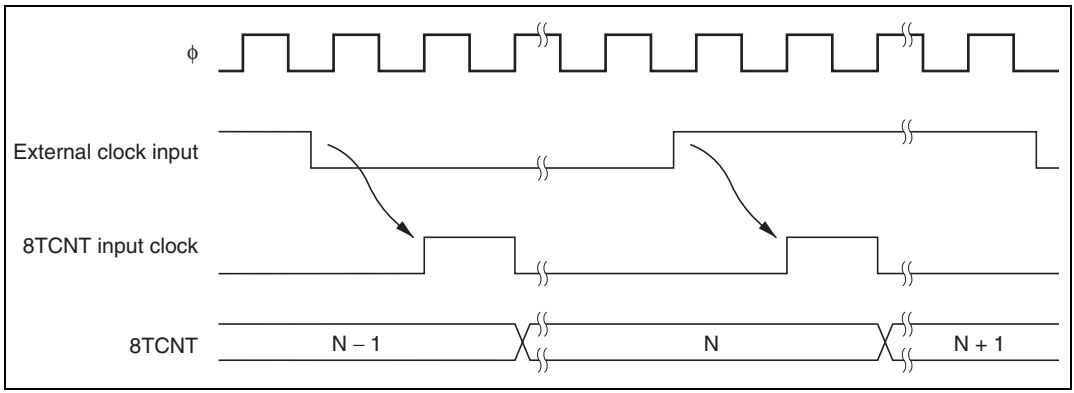

Figure 9.9 Count Timing for External Clock Input (Both-Edge Detection)

9.4.2 Compare Match Timing

Timer Output Timing: When compare match A or B occurs, the timer output is as specified by the OIS3, OIS2, OS1, and OS0 bits in 8TCSR (unchanged, 0 output, 1 output, or toggle output).

Figure 9.10 shows the timing when the output is set to toggle on compare match A.

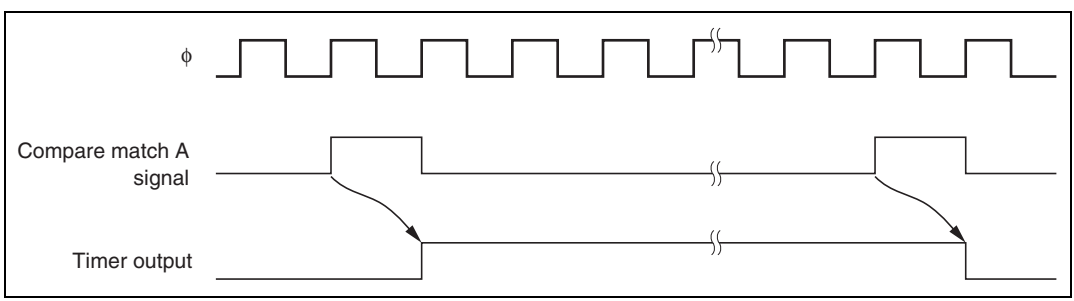

Figure 9.10 Timing of Timer Output

Clear by Compare Match: Depending on the setting of the CCLR1 and CCLR0 bits in 8TCR, 8TCNT can be cleared when compare match A or B occurs, Figure 9.11 shows the timing of this operation.

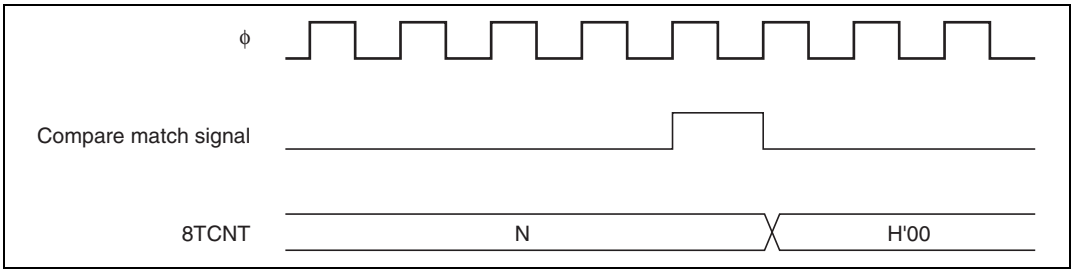

Figure 9.11 Timing of Clear by Compare Match

Clear by Input Capture: Depending on the setting of the CCLR1 and CCLR0 bits in 8TCR, 8TCNT can be cleared when input capture B occurs. Figure 9.12 shows the timing of this operation.

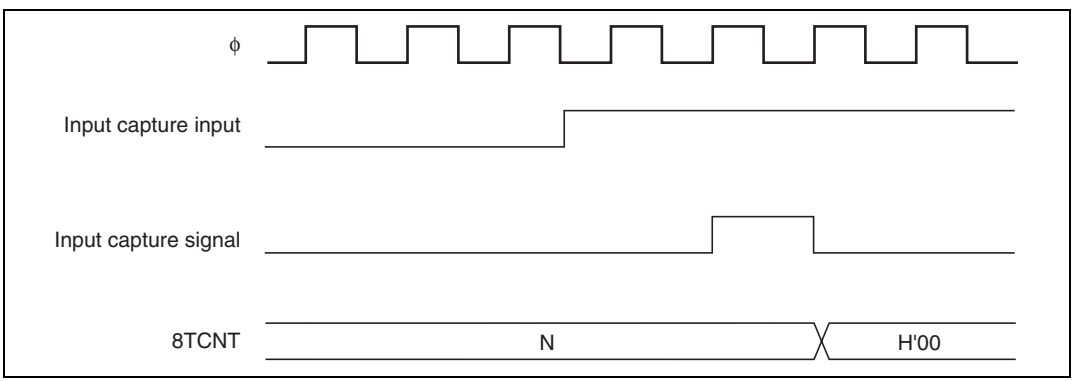

Figure 9.12 Timing of Clear by Input Capture

9.4.3 Input Capture Signal Timing

Input capture on the rising edge, falling edge, or both edges can be selected by settings in 8TCSR.

Figure 9.13 shows the timing when the rising edge is selected.

The pulse width of the input capture input signal must be at least 1.5 system clocks when a single edge is selected, and at least 2.5 system clocks when both edges are selected.

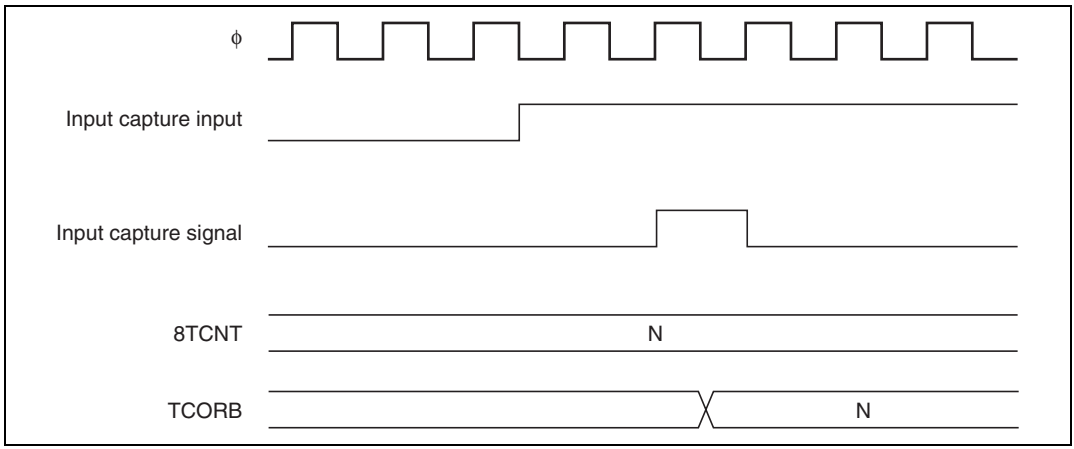

Figure 9.13 Timing of Input Capture Input Signal

9.4.4 Timing of Status Flag Setting

Timing of CMFA/CMFB Flag Setting when Compare Match Occurs: The CMFA and CMFB flags in 8TCSR are set to 1 by the compare match signal output when the TCORA or TCORB and 8TCNT values match. The compare match signal is generated in the last state of the match (when the matched 8TCNT count value is updated). Therefore, after the 8TCNT and TCORA or TCORB values match, the compare match signal is not generated until an incrementing clock pulse signal is generated. Figure 9.14 shows the timing in this case.

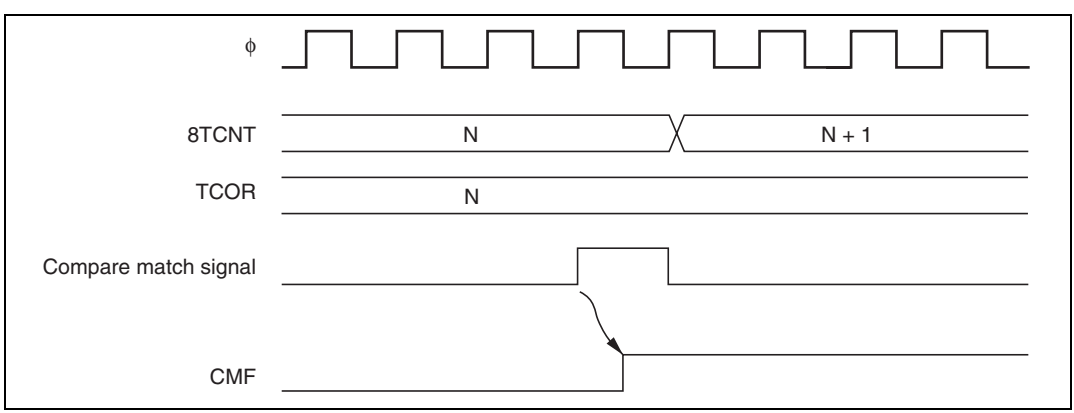

Figure 9.14 CMF Flag Setting Timing when Compare Match Occurs

Timing of CMFB Flag Setting when Input Capture Occurs: On generation of an input capture signal, the CMFB flag is set to 1 and at the same time the 8TCNT value is transferred to TCORB. Figure 9.15 shows the timing in this case.

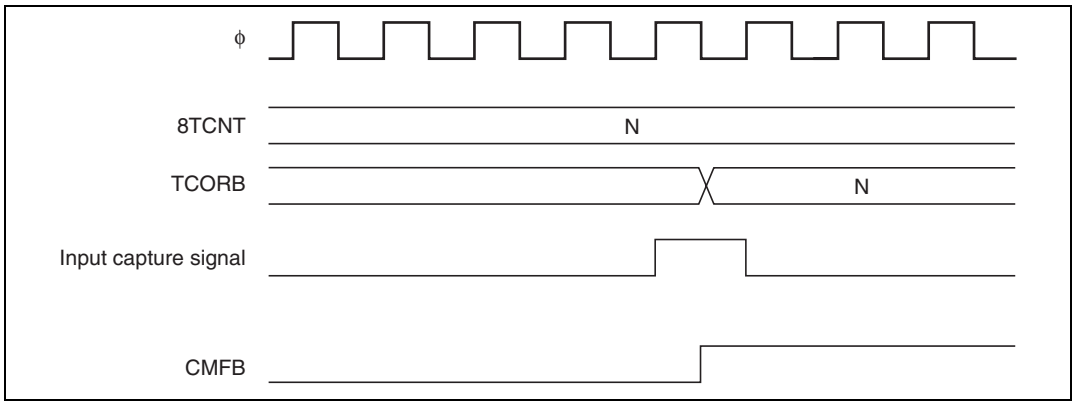

Figure 9.15 CMFB Flag Setting Timing when Input Capture Occurs

Timing of Overflow Flag (OVF) Setting: The OVF flag in 8TCSR is set to 1 by the overflow signal generated when 8TCNT overflows (from H'FF to H'00). Figure 9.16 shows the timing in this case.

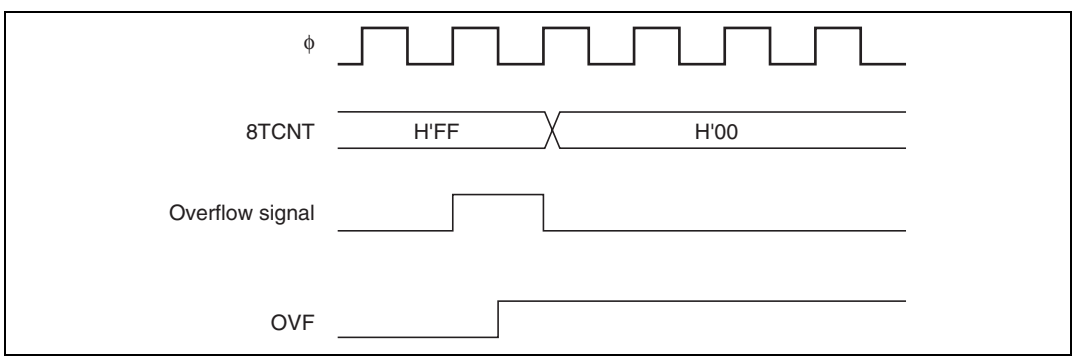

Figure 9.16 Timing of OVF Setting

9.4.5 Operation with Cascaded Connection

If bits CKS2 to CKS0 are set to (100) in either 8TCR0 or 8TCR1, the 8-bit timers of channels 0 and 1 are cascaded. With this configuration, the two timers can be used as a single 16-bit timer (16-bit timer mode), or channel 0 8-bit timer compare matches can be counted in channel 1 (compare match count mode). Similarly, if bits CKS2 to CKS0 are set to (100) in either 8TCR2 or 8TCR3, the 8-bit timers of channels 2 and 3 are cascaded. With this configuration, the two timers can be used as a single 16-bit timer (16-bit timer mode),or channel 2 8-bit timer compare matches can be counted in channel 3 (compare match count mode). In this case, the timer operates as below.

16-Bit Count Mode

- Channels 0 and 1:

  When bits CKS2 to CKS0 are set to (100) in 8TCR0, the timer functions as a single 16-bit timer with channel 0 occupying the upper 8 bits and channel 1 occupying the lower 8 bits.

  — Setting when Compare Match Occurs
    - The CMFA or CMFB flag is set to 1 in 8TCSR0 when a 16-bit compare match occurs.
    - The CMFA or CMFB flag is set to 1 in 8TCSR1 when a lower 8-bit compare match occurs.
    - TMO_0 pin output control by bits OIS3, OIS2, OS1, and OS0 in 8TCSR0 is in accordance with the 16-bit compare match conditions.
    - $TMIO_1$ pin output control by bits OIS3, OIS2, OS1, and OS0 in 8TCSR1 is in accordance with the lower 8-bit compare match conditions.

  — Setting when Input Capture Occurs
    - The CMFB flag is set to 1 in 8TCSR0 and 8TCSR1 when the ICE bit is 1 in TCSR1 and input capture occurs.
    - $TMIO_1$ pin input capture input signal edge detection is selected by bits OIS3 and OIS2 in 8TCSR0.

  — Counter Clear Specification
    - If counter clear on compare match or input capture has been selected by the CCLR1 and CCLR0 bits in 8TCR0, the 16-bit counter (both 8TCNT0 and 8TCNT1) is cleared.
    - The settings of the CCLR1 and CCLR0 bits in 8TCR1 are ignored. The lower 8 bits cannot be cleared independently.

  — OVF Flag Operation
    - The OVF flag is set to 1 in 8TCSR0 when the 16-bit counter (8TCNT0 and 8TCNT1) overflows (from H'FFFF to H'0000).
    - The OVF flag is set to 1 in 8TCSR1 when the 8-bit counter (8TCNT1) overflows (from H'FF to H'00).

- Channels 2 and 3:

  When bits CKS2 to CKS0 are set to (100) in 8TCR2, the timer functions as a single 16-bit timer with channel 2 occupying the upper 8 bits and channel 3 occupying the lower 8 bits.

  — Setting when Compare Match Occurs
    - The CMFA or CMFB flag is set to 1 in 8TCSR2 when a 16-bit compare match occurs.
    - The CMFA or CMFB flag is set to 1 in 8TCSR3 when a lower 8-bit compare match occurs.
    - TMO_2 pin output control by bits OIS3, OIS2, OS1, and OS0 in 8TCSR2 is in accordance with the 16-bit compare match conditions.

- $TMIO_3$ pin output control by bits OIS3, OIS2, OS1, and OS0 in 8TCSR3 is in accordance with the lower 8-bit compare match conditions.

— Setting when Input Capture Occurs

- The CMFB flag is set to 1 in 8TCSR2 and 8TCSR3 when the ICE bit is 1 in TCSR3 and input capture occurs.
- $TMIO_3$ pin input capture input signal edge detection is selected by bits OIS3 and OIS2 in 8TCSR2.

— Counter Clear Specification

- If counter clear on compare match has been selected by the CCLR1 and CCLR0 bits in 8TCR2, the 16-bit counter (both 8TCNT2 and 8TCNT3) is cleared.
- The settings of the CCLR1 and CCLR0 bits in 8TCR3 are ignored. The lower 8 bits cannot be cleared independently.

— OVF Flag Operation

- The OVF flag is set to 1 in 8TCSR2 when the 16-bit counter (8TCNT2 and 8TCNT3) overflows (from H'FFFF to H'0000).
- The OVF flag is set to 1 in 8TCSR3 when the 8-bit counter (8TCNT3) overflows (from H'FF to H'00).

Compare Match Count Mode

- Channels 0 and 1:

  When bits CKS2 to CKS0 are set to (100) in 8TCR1, 8TCNT1 counts channel 0 compare match A events.

  Channels 0 and 1 are controlled independently.

  CMF flag setting, interrupt generation, TMO pin output, counter clearing, and so on, is in accordance with the settings for each channel.

  Note: When bit ICE = 1 in 8TCSR1, the compare match register function of TCORB0 in channel 0 cannot be used.

- Channels 2 and 3:

  When bits CKS2 to CKS0 are set to (100) in 8TCR3, 8TCNT3 counts channel 2 compare match A events.

  Channels 2 and 3 are controlled independently.

  CMF flag setting, interrupt generation, TMO pin output, counter clearing, and so on, is in accordance with the settings for each channel.

  Note: When bit ICE = 1 in 8TCSR3, the compare match register function of TCORB2 in channel 2 cannot be used.

Caution

Do not set 16-bit counter mode and compare match count mode simultaneously within the same group, as the 8TCNT input clock will not be generated and the counters will not operate.

9.4.6 Input Capture Setting

The 8TCNT value can be transferred to TCORB on detection of an input edge on the input capture/output compare pin ($TMIO_1$ or $TMIO_3$). Rising edge, falling edge, or both edge detection can be selected. In 16-bit count mode, 16-bit input capture can be used.

Setting Input Capture Operation in 8-Bit Timer Mode (Normal Operation)

- Channel 1:
  - Set TCORB1 as an 8-bit input capture register with the ICE bit in 8TCSR1.
  - Select rising edge, falling edge, or both edges as the input edge(s) for the input capture signal ($TMIO_1$) with bits OIS3 and OIS2 in 8TCSR1.
  - Select the input clock with bits CKS2 to CKS0 in 8TCR1, and start the 8TCNT count.
- Channel 3:
  - Set TCORB3 as an 8-bit input capture register with the ICE bit in 8TCSR3.
  - Select rising edge, falling edge, or both edges as the input edge(s) for the input capture signal ($TMIO_3$) with bits OIS3 and OIS2 in 8TCSR3.
  - Select the input clock with bits CKS2 to CKS0 in 8TCR3, and start the 8TCNT count.

Note: When TCORB1 in channel 1 is used for input capture, TCORB0 in channel 0 cannot be used as a compare match register.
Similarly, when TCORB3 in channel 3 is used for input capture, TCORB2 in channel 2 cannot be used as a compare match register.

Setting Input Capture Operation in 16-Bit Count Mode

- Channels 0 and 1:
  - In 16-bit count mode, TCORB0 and TCORB1 function as a 16-bit input capture register when the ICE bit is set to 1 in 8TCSR1.
  - Select rising edge, falling edge, or both edges as the input edge(s) for the input capture signal ($TMIO_1$) with bits OIS3 and OIS2 in 8TCSR0. (In 16-bit count mode, the settings of bits OIS3 and OIS2 in 8TCSR1 are ignored.)
  - Select the input clock with bits CKS2 to CKS0 in 8TCR1, and start the 8TCNT count.
- Channels 2 and 3:
  - In 16-bit count mode, TCORB2 and TCORB3 function as a 16-bit input capture register when the ICE bit is set to 1 in 8TCSR3.

— Select rising edge, falling edge, or both edges as the input edge(s) for the input capture signal ($TMIO_3$) with bits OIS3 and OIS2 in 8TCSR2. (In 16-bit count mode, the settings of bits OIS3 and OIS2 in 8TCSR3 are ignored.)

— Select the input clock with bits CKS2 to CKS0 in 8TCR3, and start the 8TCNT count.

9.5 Interrupt

9.5.1 Interrupt Sources

The 8-bit timer unit can generate three types of interrupt: compare match A and B (CMIA and CMIB) and overflow (TOVI). Table 9.5 shows the interrupt sources and their priority order. Each interrupt source is enabled or disabled by the corresponding interrupt enable bit in 8TCR. A separate interrupt request signal is sent to the interrupt controller by each interrupt source.

Table 9.5 Types of 8-Bit Timer Interrupt Sources and Priority Order

Interrupt Source	Description	Priority
CMIA	Interrupt by CMFA	High
CMIB	Interrupt by CMFB	↑
TOVI	Interrupt by OVF	Low

For compare match interrupts CMIA1/CMIB1 and CMIA3/CMIB3 and the overflow interrupts (TOVI0/TOVI1 and TOVI2/TOVI3), one vector is shared by two interrupts.

Table 9.6 lists the interrupt sources.

Table 9.6 8-Bit Timer Interrupt Sources

Channel	Interrupt Source	Description
0	CMIA0	TCORA0 compare match
	CMIB0	TCORB0 compare match/input capture
1	CMIA1/CMIB1	TCORA1 compare match, or TCORB1 compare match/input capture
0, 1	TOVI0/TOVI1	Counter 0 or counter 1 overflow
2	CMIA2	TCORA2 compare match
	CMIB2	TCORB2 compare match/input capture
3	CMIA3/CMIB3	TCORA3 compare match, or TCORB3 compare match/input capture
2, 3	TOVI2/TOVI3	Counter 2 or counter 3 overflow

9.5.2 A/D Converter Activation

The A/D converter can only be activated by channel 0 compare match A.

If the ADTE bit setting is 1 when the CMFA flag in 8TCSR0 is set to 1 by generation of channel 0 compare match A, an A/D conversion start request will be issued to the A/D converter. If the TRGE bit in ADCR is 1 at this time, the A/D converter will be started. If the ADTE bit in 8TCSR0 is 1, A/D converter external trigger pin ($\overline{\text{ADTRG}}$) input is disabled.

9.6 8-Bit Timer Application Example

Figure 9.17 shows how the 8-bit timer module can be used to output pulses with any desired duty cycle. The settings for this example are as follows:

- Clear the CCLR1 bit to 0 and set the CCLR0 bit to 1 in 8TCR so that 8TCNT is cleared by a TCORA compare match.
- Set bits OIS3, OIS2, OS1, and OS0 to (0110) in 8TCSR so that 1 is output on a TCORA compare match and 0 is output on a TCORB compare match.

The above settings enable a waveform with the cycle determined by TCORA and the pulse width detected by TCORB to be output without software intervention.

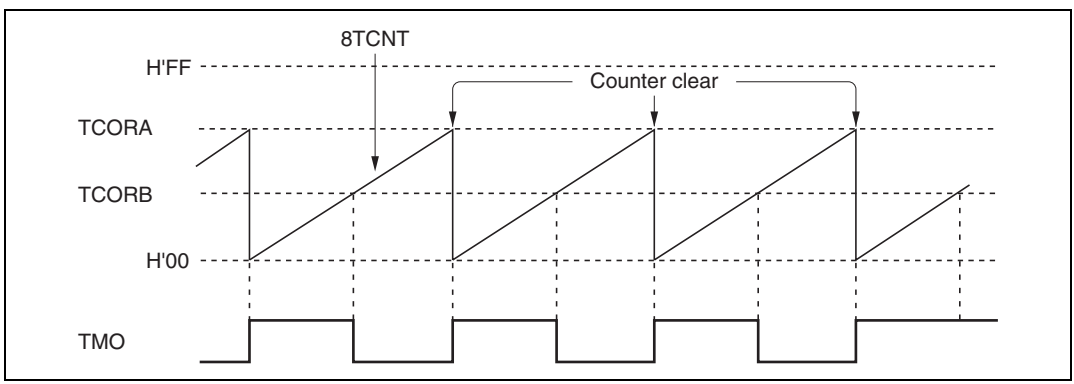

Figure 9.17 Example of Pulse Output

9.7 Usage Notes

Note that the following kinds of contention can occur in 8-bit timer operation.

9.7.1 Contention between 8TCNT Write and Clear

If a timer counter clear signal occurs in the T_3 state of a 8TCNT write cycle, clearing of the counter takes priority and the write is not performed. Figure 9.18 shows the timing in this case.

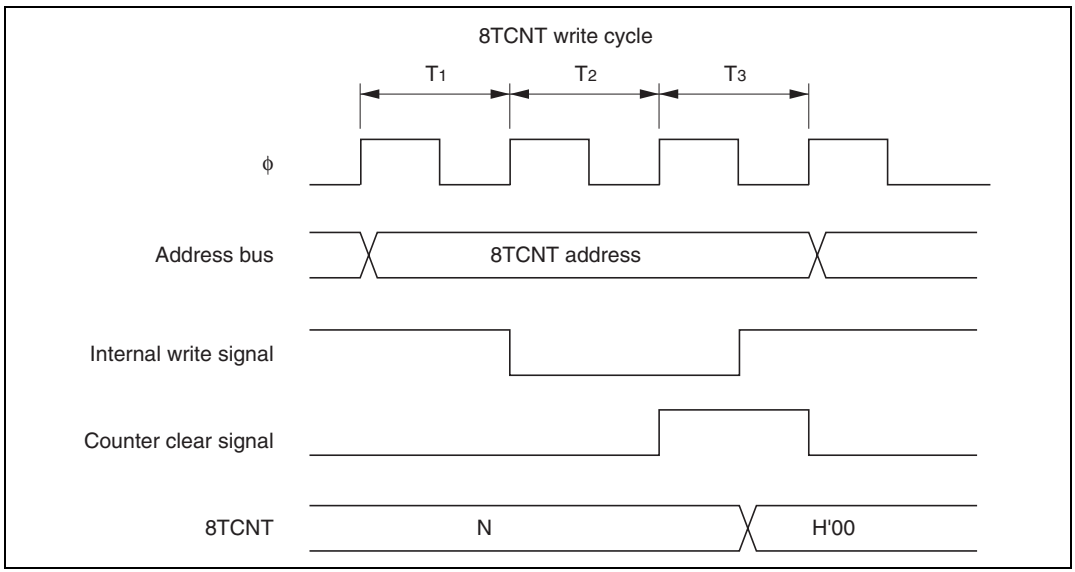

Figure 9.18 Contention between 8TCNT Write and Clear

9.7.2 Contention between 8TCNT Write and Increment

If an increment pulse occurs in the T_3 state of a 8TCNT write cycle, writing takes priority and 8TCNT is not incremented. Figure 9.19 shows the timing in this case.

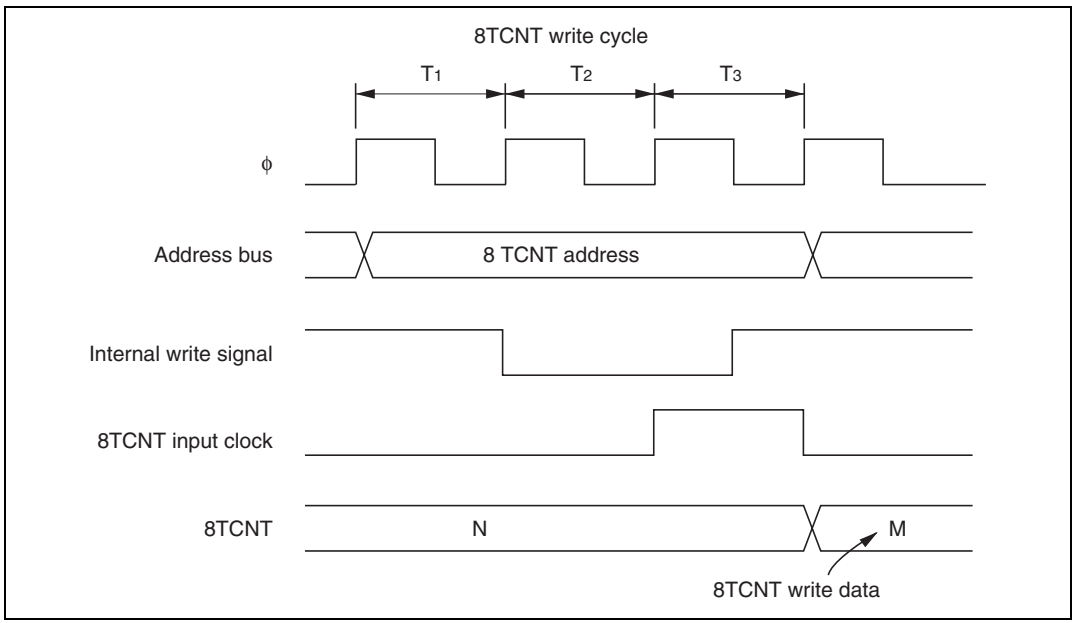

Figure 9.19 Contention between 8TCNT Write and Increment

9.7.3 Contention between TCOR Write and Compare Match

If a compare match occurs in the T_3 state of a TCOR write cycle, writing takes priority and the compare match signal is inhibited. Figure 9.20 shows the timing in this case.

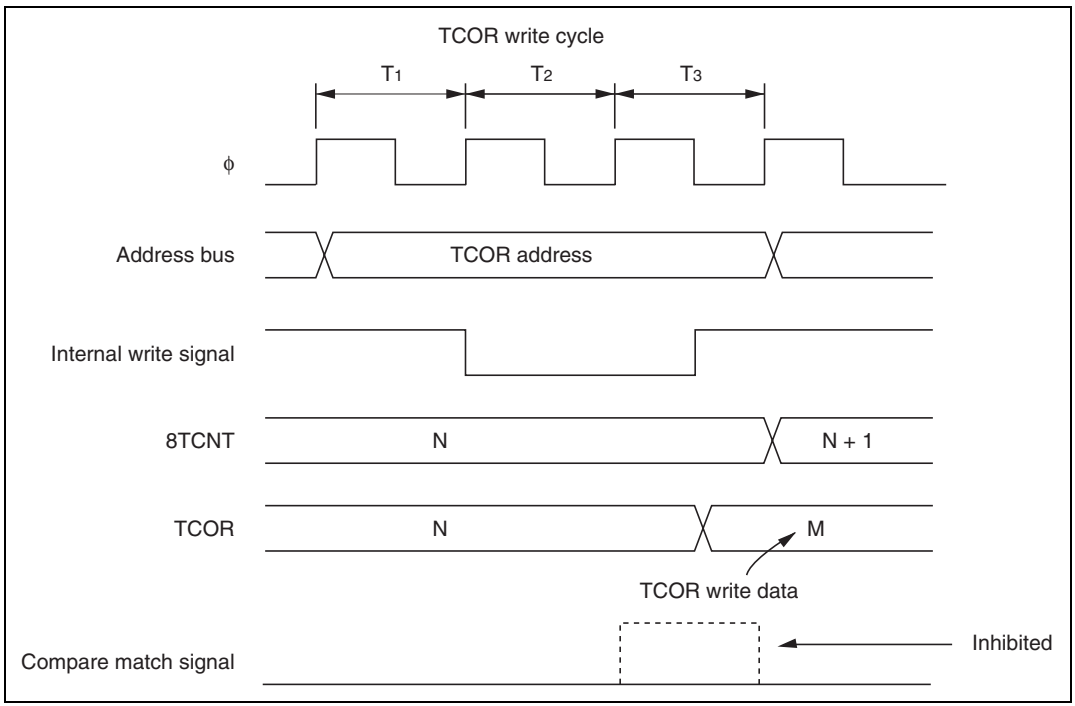

Figure 9.20 Contention between TCOR Write and Compare Match

9.7.4 Contention between TCOR Read and Input Capture

If an input capture signal occurs in the T_3 state of a TCOR read cycle, the value before input capture is read. Figure 9.21 shows the timing in this case.

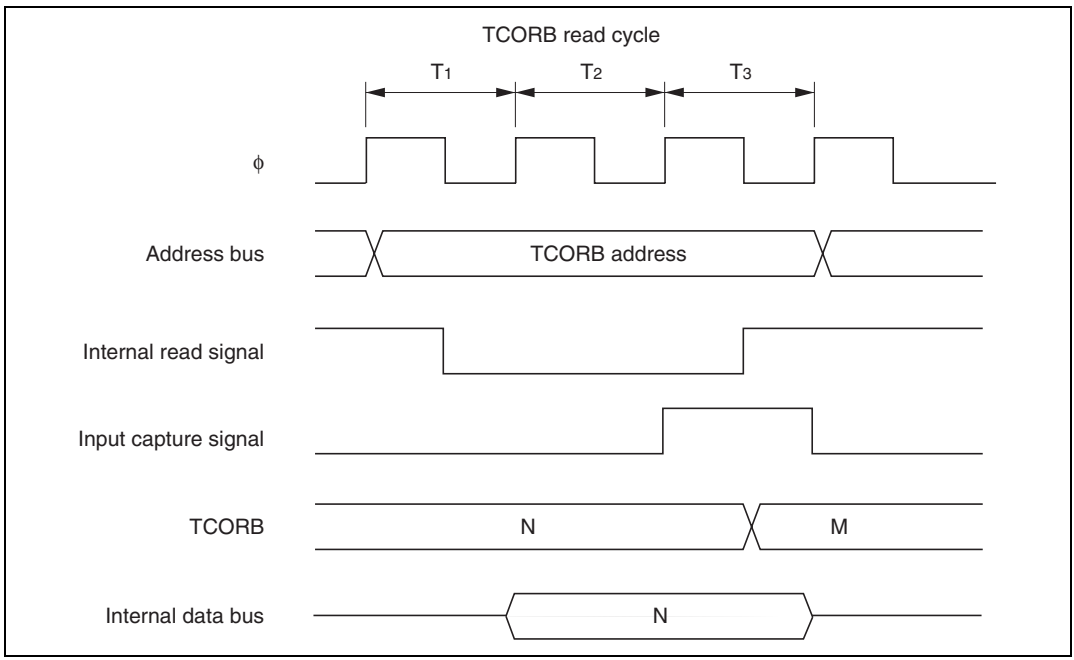

Figure 9.21 Contention between TCOR Read and Input Capture

9.7.5 Contention between Counter Clearing by Input Capture and Counter Increment

If an input capture signal and counter increment signal occur simultaneously, counter clearing by the input capture signal takes priority and the counter is not incremented. The value before the counter is cleared is transferred to TCORB. Figure 9.22 shows the timing in this case.

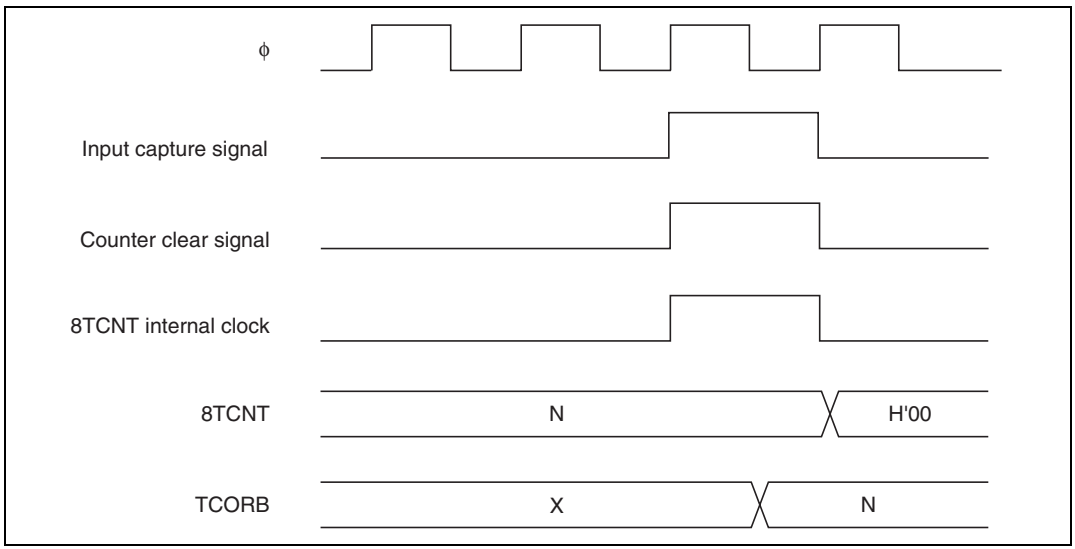

Figure 9.22 Contention between Counter Clearing by Input Capture and Counter Increment

9.7.6 Contention between TCOR Write and Input Capture

If an input capture signal occurs in the T_3 state of a TCOR write cycle, input capture takes priority and the write to TCOR is not performed. Figure 9.23 shows the timing in this case.

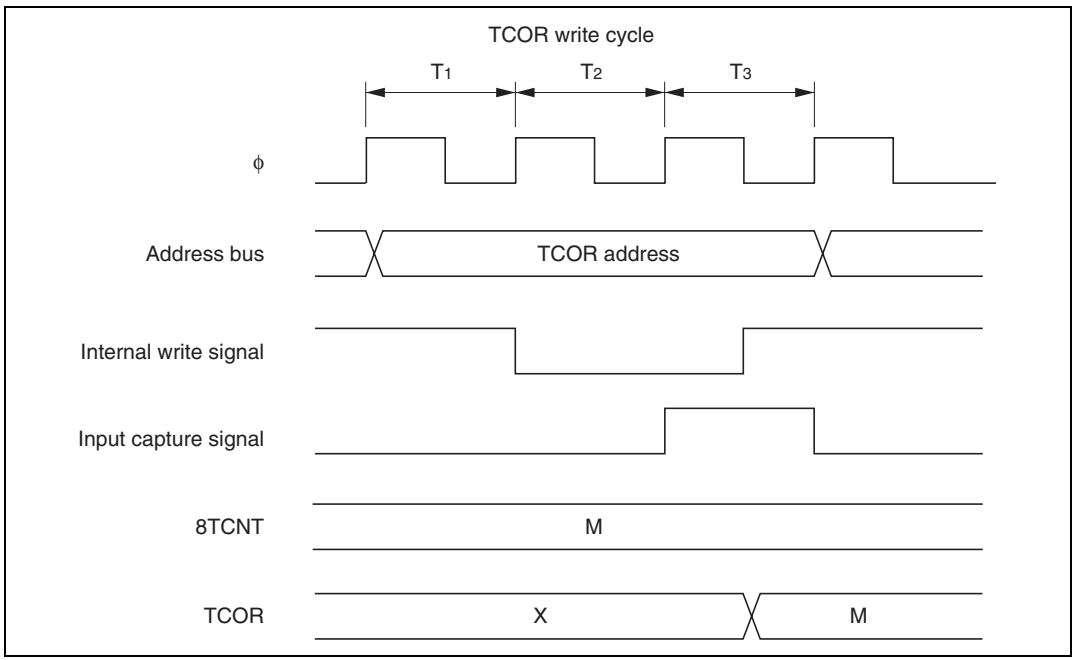

Figure 9.23 Contention between TCOR Write and Input Capture

9.7.7 Contention between 8TCNT Byte Write and Increment in 16-Bit Count Mode (Cascaded Connection)

If an increment pulse occurs in the T_2 or T_3 state of an 8TCNT byte write cycle in 16-bit count mode, the counter write takes priority and the byte data for which the write was performed is not incremented. The byte data for which a write was not performed is incremented. Figure 9.24 shows the timing when an increment pulse occurs in the T_2 state of a byte write to 8TCNT (upper byte). If an increment pulse occurs in the T_2 state, on the other hand, the increment takes priority.

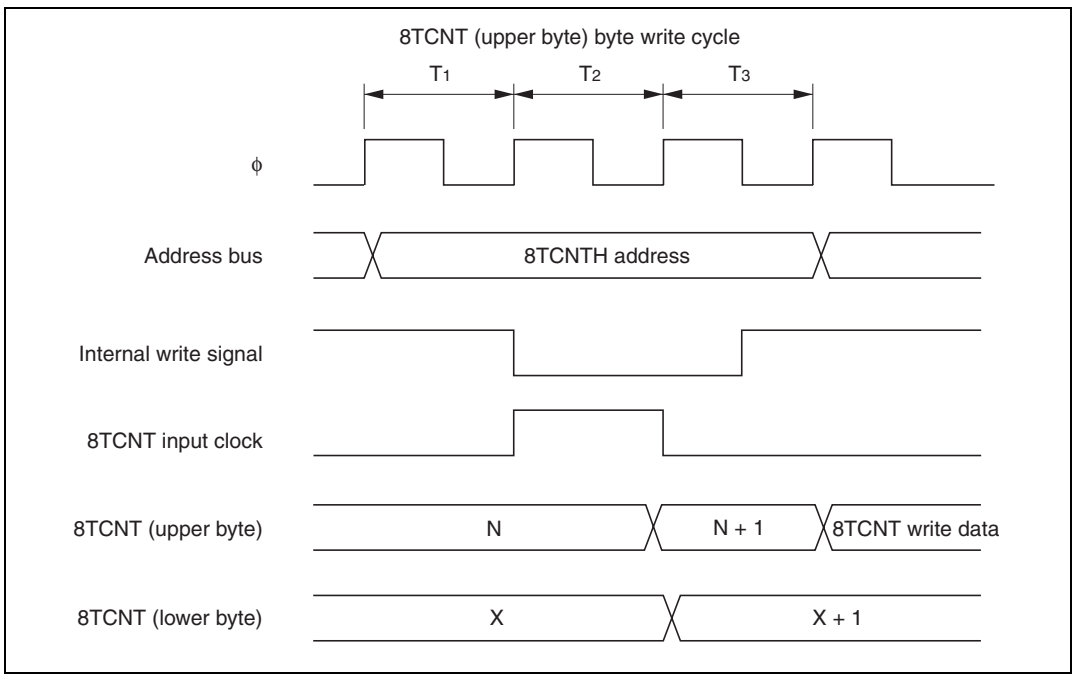

Figure 9.24 Contention between 8TCNT Byte Write and Increment in 16-Bit Count Mode

9.7.8 Contention between Compare Matches A and B

If compare matches A and B occur at the same time, the 8-bit timer operates according to the relative priority of the output states set for compare match A and compare match B, as shown in Table 9.7.

Table 9.7 Timer Output Priority Order

Output Setting	Priority
Toggle output	High
1 output	↑
0 output	
No change	Low

9.7.9 8TCNT Operation and Internal Clock Source Switchover

Switching internal clock sources may cause 8TCNT to increment, depending on the switchover timing. Table 9.8 shows the relation between the time of the switchover (by writing to bits CKS1 and CKS0) and the operation of 8TCNT.

The 8TCNT input clock is generated from the internal clock source by detecting the rising edge of the internal clock. If a switchover is made from a low clock source to a high clock source, as in case No. 3 in Table 9.8, the switchover will be regarded as a falling edge, a 8TCNT clock pulse will be generated, and 8TCNT will be incremented.

8TCNT may also be incremented when switching between internal and external clocks.

Table 9.8 Internal Clock Switchover and 8TCNT Operation

No.	CKS1 and CKS0 Write Timing	8TCNT Operation
1	High → high switchover*[1]	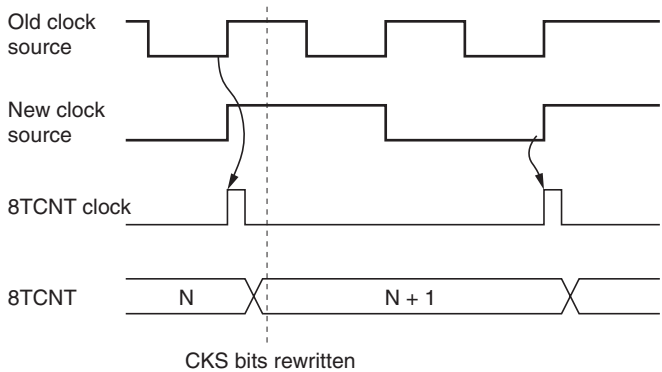
2	High → low switchover*[2]	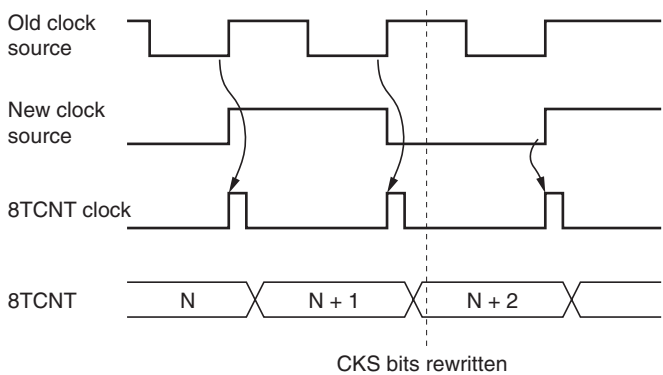
3	Low → high switchover*[3]	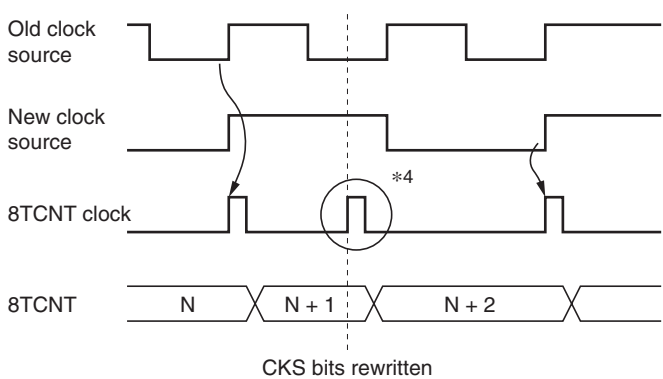

No.	CKS1 and CKS0 Write Timing	8TCNT Operation
4	Low → low switchover*[4]	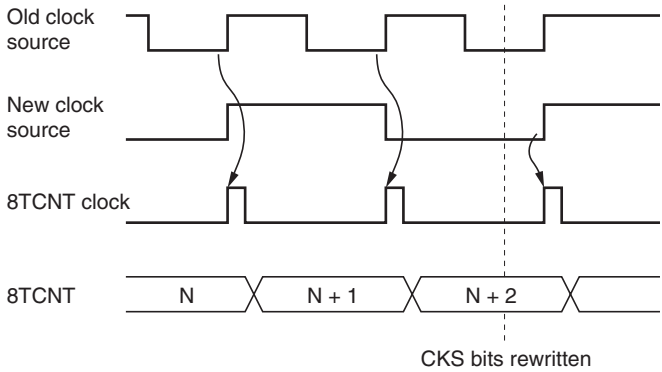

Notes: 1. Including switchovers from the high level to the halted state, and from the halted state to the high level.
2. Including switchover from the halted state to the low level.
3. Including switchover from the low level to the halted state.
4. The switchover is regarded as a rising edge, causing 8TCNT to increment.

Section 10 Programmable Timing Pattern Controller (TPC)

10.1 Overview

The H8/3008 has a built-in programmable timing pattern controller (TPC) that provides pulse outputs by using the 16-bit timer as a time base. The TPC pulse outputs are divided into 4-bit groups (group 3 to group 0) that can operate simultaneously and independently.

10.1.1 Features

TPC features are listed below.

- 16-bit output data

  Maximum 16-bit data can be output. TPC output can be enabled on a bit-by-bit basis.
- Four output groups

  Output trigger signals can be selected in 4-bit groups to provide up to four different 4-bit outputs.
- Selectable output trigger signals

  Output trigger signals can be selected for each group from the compare match signals of three 16-bit timer channels.
- Non-overlap mode

  A non-overlap margin can be provided between pulse outputs.

10.1.2 Block Diagram

Figure 10.1 shows a block diagram of the TPC.

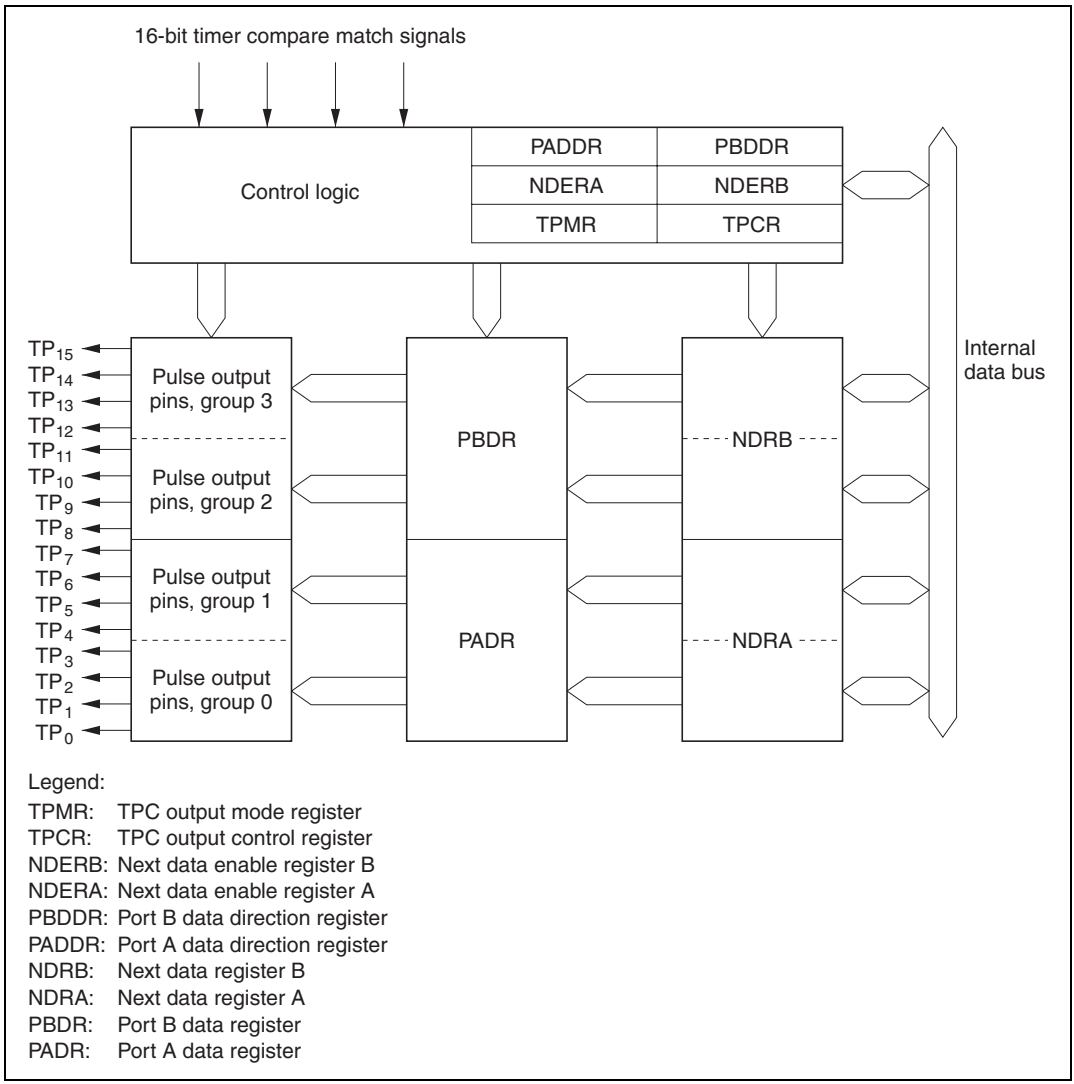

Figure 10.1 TPC Block Diagram

10.1.3 Pin Configuration

Table 10.1 summarizes the TPC output pins.

Table 10.1 TPC Pins

Name	Symbol	I/O	Function
TPC output 0	TP_0	Output	Group 0 pulse output
TPC output 1	TP_1	Output	
TPC output 2	TP_2	Output	
TPC output 3	TP_3	Output	
TPC output 4	TP_4	Output	Group 1 pulse output
TPC output 5	TP_5	Output	
TPC output 6	TP_6	Output	
TPC output 7	TP_7	Output	
TPC output 8	TP_8	Output	Group 2 pulse output
TPC output 9	TP_9	Output	
TPC output 10	TP_{10}	Output	
TPC output 11	TP_{11}	Output	
TPC output 12	TP_{12}	Output	Group 3 pulse output
TPC output 13	TP_{13}	Output	
TPC output 14	TP_{14}	Output	
TPC output 15	TP_{15}	Output	

10.1.4 Register Configuration

Table 10.2 summarizes the TPC registers.

Table 10.2 TPC Registers

Address*[1]	Name	Abbreviation	R/W	Initial Value
H'EE009	Port A data direction register	PADDR	W	H'00
H'FFFD9	Port A data register	PADR	R/(W)*[2]	H'00
H'EE00A	Port B data direction register	PBDDR	W	H'00
H'FFFDA	Port B data register	PBDR	R/(W)*[2]	H'00
H'FFFA0	TPC output mode register	TPMR	R/W	H'F0
H'FFFA1	TPC output control register	TPCR	R/W	H'FF
H'FFFA2	Next data enable register B	NDERB	R/W	H'00
H'FFFA3	Next data enable register A	NDERA	R/W	H'00
H'FFFA5/ H'FFFA7*[3]	Next data register A	NDRA	R/W	H'00
H'FFFA4/ H'FFFA6*[3]	Next data register B	NDRB	R/W	H'00

Notes: 1. Lower 20 bits of the address in advanced mode.
2. Bits used for TPC output cannot be written.
3. The NDRA address is H'FFFA5 when the same output trigger is selected for TPC output groups 0 and 1 by settings in TPCR. When the output triggers are different, the NDRA address is H'FFFA7 for group 0 and H'FFFA5 for group 1. Similarly, the address of NDRB is H'FFFA4 when the same output trigger is selected for TPC output groups 2 and 3 by settings in TPCR. When the output triggers are different, the NDRB address is H'FFFA6 for group 2 and H'FFFA4 for group 3.

10.2 Register Descriptions

10.2.1 Port A Data Direction Register (PADDR)

PADDR is an 8-bit write-only register that selects input or output for each pin in port A.

Bit	7	6	5	4	3	2	1	0
	PA_7DDR	PA_6DDR	PA_5DDR	PA_4DDR	PA_3DDR	PA_2DDR	PA_1DDR	PA_0DDR
Initial value	0	0	0	0	0	0	0	0
Read/Write	W	W	W	W	W	W	W	W

Port A data direction 7 to 0
These bits select input or output for port A pins

Port A is multiplexed with pins TP_7 to TP_0. Bits corresponding to pins used for TPC output must be set to 1. For further information about PADDR, see section 7.11, Port A.

10.2.2 Port A Data Register (PADR)

PADR is an 8-bit readable/writable register that stores TPC output data for groups 0 and 1, when these TPC output groups are used.

Bit	7	6	5	4	3	2	1	0
	PA_7	PA_6	PA_5	PA_4	PA_3	PA_2	PA_1	PA_0
Initial value	0	0	0	0	0	0	0	0
Read/Write	R/(W)*	R/(W)*	R/(W)*	R/(W)*	R/(W)*	R/(W)*	R/(W)*	R/(W)*

Port A data 7 to 0
These bits store output data for TPC output groups 0 and 1

Note: * Bits selected for TPC output by NDERA settings become read-only bits.

For further information about PADR, see section 7.11, Port A.

10.2.3 Port B Data Direction Register (PBDDR)

PBDDR is an 8-bit write-only register that selects input or output for each pin in port B.

Bit	7	6	5	4	3	2	1	0
	PB_7DDR	PB_6DDR	PB_5DDR	PB_4DDR	PB_3DDR	PB_2DDR	PB_1DDR	PB_0DDR
Initial value	0	0	0	0	0	0	0	0
Read/Write	W	W	W	W	W	W	W	W

Port B data direction 7 to 0
These bits select input or output for port B pins

Port B is multiplexed with pins TP_{15} to TP_8. Bits corresponding to pins used for TPC output must be set to 1. For further information about PBDDR, see section 7.12, Port B.

10.2.4 Port B Data Register (PBDR)

PBDR is an 8-bit readable/writable register that stores TPC output data for groups 2 and 3, when these TPC output groups are used.

Bit	7	6	5	4	3	2	1	0
	PB_7	PB_6	PB_5	PB_4	PB_3	PB_2	PB_1	PB_0
Initial value	0	0	0	0	0	0	0	0
Read/Write	R/(W)*	R/(W)*	R/(W)*	R/(W)*	R/(W)*	R/(W)*	R/(W)*	R/(W)*

Port B data 7 to 0
These bits store output data for TPC output groups 2 and 3

Note: * Bits selected for TPC output by NDERB settings become read-only bits.

For further information about PBDR, see section 7.12, Port B.

10.2.5 Next Data Register A (NDRA)

NDRA is an 8-bit readable/writable register that stores the next output data for TPC output groups 1 and 0 (pins TP_7 to TP_0). During TPC output, when an 16-bit timer compare match event specified in TPCR occurs, NDRA contents are transferred to the corresponding bits in PADR. The address of NDRA differs depending on whether TPC output groups 0 and 1 have the same output trigger or different output triggers.

NDRA is initialized to H'00 by a reset and in hardware standby mode. It is not initialized in software standby mode.

Same Trigger for TPC Output Groups 0 and 1: If TPC output groups 0 and 1 are triggered by the same compare match event, the NDRA address is H'FFFA5. The upper 4 bits belong to group 1 and the lower 4 bits to group 0. Address H'FFFA7 consists entirely of reserved bits that cannot be modified and always read 1.

Address H'FFFA5

Bit	7	6	5	4	3	2	1	0
	NDR7	NDR6	NDR5	NDR4	NDR3	NDR2	NDR1	NDR0
Initial value	0	0	0	0	0	0	0	0
Read/Write	R/W	R/W	R/W	R/W	R/W	R/W	R/W	R/W

Next data 7 to 4
These bits store the next output data for TPC output group 1

Next data 3 to 0
These bits store the next output data for TPC output group 0

Address H'FFFA7

Bit	7	6	5	4	3	2	1	0
	—	—	—	—	—	—	—	—
Initial value	1	1	1	1	1	1	1	1
Read/Write	—	—	—	—	—	—	—	—

Reserved bits

Different Triggers for TPC Output Groups 0 and 1: If TPC output groups 0 and 1 are triggered by different compare match events, the address of the upper 4 bits of NDRA (group 1) is H'FFFA5 and the address of the lower 4 bits (group 0) is H'FFFA7. Bits 3 to 0 of address H'FFFA5 and bits 7 to 4 of address H'FFFA7 are reserved bits that cannot be modified and always read 1.

Address H'FFFA5

Bit	7	6	5	4	3	2	1	0
	NDR7	NDR6	NDR5	NDR4	—	—	—	—
Initial value	0	0	0	0	1	1	1	1
Read/Write	R/W	R/W	R/W	R/W	—	—	—	—

Next data 7 to 4
These bits store the next output data for TPC output group 1

Reserved bits

Address H'FFFA7

Bit	7	6	5	4	3	2	1	0
	—	—	—	—	NDR3	NDR2	NDR1	NDR0
Initial value	1	1	1	1	0	0	0	0
Read/Write	—	—	—	—	R/W	R/W	R/W	R/W

Reserved bits

Next data 3 to 0
These bits store the next output data for TPC output group 0

10.2.6 Next Data Register B (NDRB)

NDRB is an 8-bit readable/writable register that stores the next output data for TPC output groups 3 and 2 (pins TP_{15} to TP_8). During TPC output, when an 16-bit timer compare match event specified in TPCR occurs, NDRB contents are transferred to the corresponding bits in PBDR. The address of NDRB differs depending on whether TPC output groups 2 and 3 have the same output trigger or different output triggers.

NDRB is initialized to H'00 by a reset and in hardware standby mode. It is not initialized in software standby mode.

Same Trigger for TPC Output Groups 2 and 3: If TPC output groups 2 and 3 are triggered by the same compare match event, the NDRB address is H'FFFA4. The upper 4 bits belong to group 3 and the lower 4 bits to group 2. Address H'FFFA6 consists entirely of reserved bits that cannot be modified and always read 1.

Address H'FFFA4

Bit	7	6	5	4	3	2	1	0
	NDR15	NDR14	NDR13	NDR12	NDR11	NDR10	NDR9	NDR8
Initial value	0	0	0	0	0	0	0	0
Read/Write	R/W	R/W	R/W	R/W	R/W	R/W	R/W	R/W

Next data 15 to 12
These bits store the next output data for TPC output group 3

Next data 11 to 8
These bits store the next output data for TPC output group 2

Address H'FFFA6

Bit	7	6	5	4	3	2	1	0
	—	—	—	—	—	—	—	—
Initial value	1	1	1	1	1	1	1	1
Read/Write	—	—	—	—	—	—	—	—

Reserved bits

Different Triggers for TPC Output Groups 2 and 3: If TPC output groups 2 and 3 are triggered by different compare match events, the address of the upper 4 bits of NDRB (group 3) is H'FFFA4 and the address of the lower 4 bits (group 2) is H'FFFA6. Bits 3 to 0 of address H'FFFA4 and bits 7 to 4 of address H'FFFA6 are reserved bits that cannot be modified and always read 1.

Address H'FFFA4

Bit	7	6	5	4	3	2	1	0
	NDR15	NDR14	NDR13	NDR12	—	—	—	—
Initial value	0	0	0	0	1	1	1	1
Read/Write	R/W	R/W	R/W	R/W	—	—	—	—

Next data 15 to 12
These bits store the next output data for TPC output group 3

Reserved bits

Address H'FFFA6

Bit	7	6	5	4	3	2	1	0
	—	—	—	—	NDR11	NDR10	NDR9	NDR8
Initial value	1	1	1	1	0	0	0	0
Read/Write	—	—	—	—	R/W	R/W	R/W	R/W

Reserved bits

Next data 11 to 8
These bits store the next output data for TPC output group 2

10.2.7 Next Data Enable Register A (NDERA)

NDERA is an 8-bit readable/writable register that enables or disables TPC output groups 1 and 0 (TP_7 to TP_0) on a bit-by-bit basis.

Bit	7	6	5	4	3	2	1	0
	NDER7	NDER6	NDER5	NDER4	NDER3	NDER2	NDER1	NDER0
Initial value	0	0	0	0	0	0	0	0
Read/Write	R/W	R/W	R/W	R/W	R/W	R/W	R/W	R/W

Next data enable 7 to 0
These bits enable or disable TPC output groups 1 and 0

If a bit is enabled for TPC output by NDERA, then when the 16-bit timer compare match event selected in the TPC output control register (TPCR) occurs, the NDRA value is automatically transferred to the corresponding PADR bit, updating the output value. If TPC output is disabled, the bit value is not transferred from NDRA to PADR and the output value does not change.

NDERA is initialized to H'00 by a reset and in hardware standby mode. It is not initialized in software standby mode.

Bits 7 to 0—Next Data Enable 7 to 0 (NDER7 to NDER0): These bits enable or disable TPC output groups 1 and 0 (TP_7 to TP_0) on a bit-by-bit basis.

Bits 7 to 0 NDER7 to NDER0	Description
0	TPC outputs TP_7 to TP_0 are disabled (Initial value) (NDR7 to NDR0 are not transferred to PA_7 to PA_0)
1	TPC outputs TP_7 to TP_0 are enabled (NDR7 to NDR0 are transferred to PA_7 to PA_0)

10.2.8 Next Data Enable Register B (NDERB)

NDERB is an 8-bit readable/writable register that enables or disables TPC output groups 3 and 2 (TP_{15} to TP_8) on a bit-by-bit basis.

Bit	7	6	5	4	3	2	1	0
	NDER15	NDER14	NDER13	NDER12	NDER11	NDER10	NDER9	NDER8
Initial value	0	0	0	0	0	0	0	0
Read/Write	R/W	R/W	R/W	R/W	R/W	R/W	R/W	R/W

Next data enable 15 to 8
These bits enable or disable TPC output groups 3 and 2

If a bit is enabled for TPC output by NDERB, then when the 16-bit timer compare match event selected in the TPC output control register (TPCR) occurs, the NDRB value is automatically transferred to the corresponding PBDR bit, updating the output value. If TPC output is disabled, the bit value is not transferred from NDRB to PBDR and the output value does not change.

NDERB is initialized to H'00 by a reset and in hardware standby mode. It is not initialized in software standby mode.

Bits 7 to 0—Next Data Enable 15 to 8 (NDER15 to NDER8): These bits enable or disable TPC output groups 3 and 2 (TP_{15} to TP_8) on a bit-by-bit basis.

Bits 7 to 0 NDER15 to NDER8	Description
0	TPC outputs TP_{15} to TP_8 are disabled (Initial value) (NDR15 to NDR8 are not transferred to PB_7 to PB_0)
1	TPC outputs TP_{15} to TP_8 are enabled (NDR15 to NDR8 are transferred to PB_7 to PB_0)

10.2.9 TPC Output Control Register (TPCR)

TPCR is an 8-bit readable/writable register that selects output trigger signals for TPC outputs on a group-by-group basis.

Bit	7	6	5	4	3	2	1	0
	G3CMS1	G3CMS0	G2CMS1	G2CMS0	G1CMS1	G1CMS0	G0CMS1	G0CMS0
Initial value	1	1	1	1	1	1	1	1
Read/Write	R/W	R/W	R/W	R/W	R/W	R/W	R/W	R/W

Group 3 compare match select 1 and 0
These bits select the compare match event that triggers TPC output group 3 (TP_{15} to TP_{12})

Group 2 compare match select 1 and 0
These bits select the compare match event that triggers TPC output group 2 (TP_{11} to TP_8)

Group 1 compare match select 1 and 0
These bits select the compare match event that triggers TPC output group 1 (TP_7 to TP_4)

Group 0 compare match select 1 and 0
These bits select the compare match event that triggers TPC output group 0 (TP_3 to TP_0)

TPCR is initialized to H'FF by a reset and in hardware standby mode. It is not initialized in software standby mode.

Bits 7 and 6—Group 3 Compare Match Select 1 and 0 (G3CMS1, G3CMS0): These bits select the compare match event that triggers TPC output group 3 (TP_{15} to TP_{12}).

Bit 7 G3CMS1	Bit 6 G3CMS0	Description
0	0	TPC output group 3 (TP_{15} to TP_{12}) is triggered by compare match in 16-bit timer channel 0
	1	TPC output group 3 (TP_{15} to TP_{12}) is triggered by compare match in 16-bit timer channel 1
1	0	TPC output group 3 (TP_{15} to TP_{12}) is triggered by compare match in 16-bit timer channel 2
	1	TPC output group 3 (TP_{15} to TP_{12}) is triggered by compare match in 16-bit timer channel 2 (Initial value)

Bits 5 and 4—Group 2 Compare Match Select 1 and 0 (G2CMS1, G2CMS0): These bits select the compare match event that triggers TPC output group 2 (TP_{11} to TP_{8}).

Bit 5 G2CMS1	Bit 4 G2CMS0	Description
0	0	TPC output group 2 (TP_{11} to TP_{8}) is triggered by compare match in 16-bit timer channel 0
	1	TPC output group 2 (TP_{11} to TP_{8}) is triggered by compare match in 16-bit timer channel 1
1	0	TPC output group 2 (TP_{11} to TP_{8}) is triggered by compare match in 16-bit timer channel 2
	1	TPC output group 2 (TP_{11} to TP_{8}) is triggered by compare match in 16-bit timer channel 2 (Initial value)

Bits 3 and 2—Group 1 Compare Match Select 1 and 0 (G1CMS1, G1CMS0): These bits select the compare match event that triggers TPC output group 1 (TP_7 to TP_4).

Bit 3 G1CMS1	Bit 2 G1CMS0	Description
0	0	TPC output group 1 (TP_7 to TP_4) is triggered by compare match in 16-bit timer channel 0
	1	TPC output group 1 (TP_7 to TP_4) is triggered by compare match in 16-bit timer channel 1
1	0	TPC output group 1 (TP_7 to TP_4) is triggered by compare match in 16-bit timer channel 2
	1	TPC output group 1 (TP_7 to TP_4) is triggered by compare match in 16-bit timer channel 2 (Initial value)

Bits 1 and 0—Group 0 Compare Match Select 1 and 0 (G0CMS1, G0CMS0): These bits select the compare match event that triggers TPC output group 0 (TP_3 to TP_0).

Bit 1 G0CMS1	Bit 0 G0CMS0	Description
0	0	TPC output group 0 (TP_3 to TP_0) is triggered by compare match in 16-bit timer channel 0
	1	TPC output group 0 (TP_3 to TP_0) is triggered by compare match in 16-bit timer channel 1
1	0	TPC output group 0 (TP_3 to TP_0) is triggered by compare match in 16-bit timer channel 2
	1	TPC output group 0 (TP_3 to TP_0) is triggered by compare match in 16-bit timer channel 2 (Initial value)

10.2.10 TPC Output Mode Register (TPMR)

TPMR is an 8-bit readable/writable register that selects normal or non-overlapping TPC output for each group.

Bit	7	6	5	4	3	2	1	0
	—	—	—	—	G3NOV	G2NOV	G1NOV	G0NOV
Initial value	1	1	1	1	0	0	0	0
Read/Write	—	—	—	—	R/W	R/W	R/W	R/W

Reserved bits

Group 3 non-overlap
Selects non-overlapping TPC output for group 3 (TP_{15} to TP_{12})

Group 2 non-overlap
Selects non-overlapping TPC output for group 2 (TP_{11} to TP_{8})

Group 1 non-overlap
Selects non-overlapping TPC output for group 1 (TP_{7} to TP_{4})

Group 0 non-overlap
Selects non-overlapping TPC output for group 0 (TP_{3} to TP_{0})

The output trigger period of a non-overlapping TPC output waveform is set in general register B (GRB) in the 16-bit timer channel selected for output triggering. The non-overlap margin is set in general register A (GRA). The output values change at compare match A and B.

For details see section 10.3.4, Non-Overlapping TPC Output.

TPMR is initialized to H'F0 by a reset and in hardware standby mode. It is not initialized in software standby mode.

Bits 7 to 4—Reserved: These bits cannot be modified and are always read as 1.

Bit 3—Group 3 Non-Overlap (G3NOV): Selects normal or non-overlapping TPC output for group 3 (TP_{15} to TP_{12}).

Bit 3 G3NOV	Description	
0	Normal TPC output in group 3 (output values change at compare match A in the selected 16-bit timer channel)	(Initial value)
1	Non-overlapping TPC output in group 3 (independent 1 and 0 output at compare match A and B in the selected 16-bit timer channel)	

Bit 2—Group 2 Non-Overlap (G2NOV): Selects normal or non-overlapping TPC output for group 2 (TP_{11} to TP_{8}).

Bit 2 G2NOV	Description	
0	Normal TPC output in group 2 (output values change at compare match A in the selected 16-bit timer channel)	(Initial value)
1	Non-overlapping TPC output in group 2 (independent 1 and 0 output at compare match A and B in the selected 16-bit timer channel)	

Bit 1—Group 1 Non-Overlap (G1NOV): Selects normal or non-overlapping TPC output for group 1 (TP_{7} to TP_{4}).

Bit 1 G1NOV	Description	
0	Normal TPC output in group 1 (output values change at compare match A in the selected 16-bit timer channel)	(Initial value)
1	Non-overlapping TPC output in group 1 (independent 1 and 0 output at compare match A and B in the selected 16-bit timer channel)	

Bit 0—Group 0 Non-Overlap (G0NOV): Selects normal or non-overlapping TPC output for group 0 (TP_{3} to TP_{0}).

Bit 0 G0NOV	Description	
0	Normal TPC output in group 0 (output values change at compare match A in the selected 16-bit timer channel)	(Initial value)
1	Non-overlapping TPC output in group 0 (independent 1 and 0 output at compare match A and B in the selected 16-bit timer channel)	

10.3 Operation

10.3.1 Overview

When corresponding bits in PADDR or PBDDR and NDERA or NDERB are set to 1, TPC output is enabled. The TPC output initially consists of the corresponding PADR or PBDR contents. When a compare-match event selected in TPCR occurs, the corresponding NDRA or NDRB bit contents are transferred to PADR or PBDR to update the output values.

Figure 10.2 illustrates the TPC output operation. Table 10.3 summarizes the TPC operating conditions.

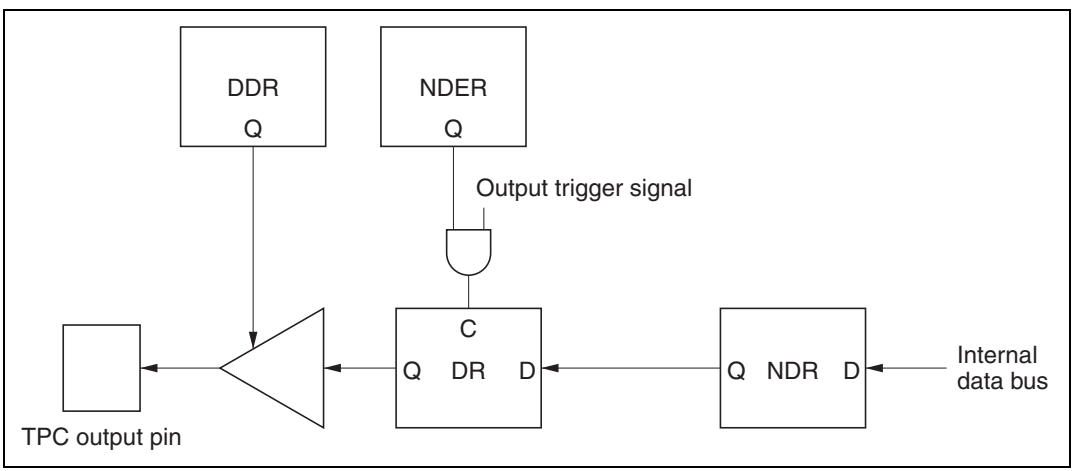

Figure 10.2 TPC Output Operation

Table 10.3 TPC Operating Conditions

NDER	DDR	Pin Function
0	0	Generic input port
	1	Generic output port
1	0	Generic input port (but the DR bit is a read-only bit, and when compare match occurs, the NDR bit value is transferred to the DR bit)
	1	TPC pulse output

Sequential output of up to 16-bit patterns is possible by writing new output data to NDRA and NDRB before the next compare match. For information on non-overlapping operation, see section 10.3.4, Non-Overlapping TPC Output.

10.3.2 Output Timing

If TPC output is enabled, NDRA/NDRB contents are transferred to PADR/PBDR and output when the selected compare match event occurs. Figure 10.3 shows the timing of these operations for the case of normal output in groups 2 and 3, triggered by compare match A.

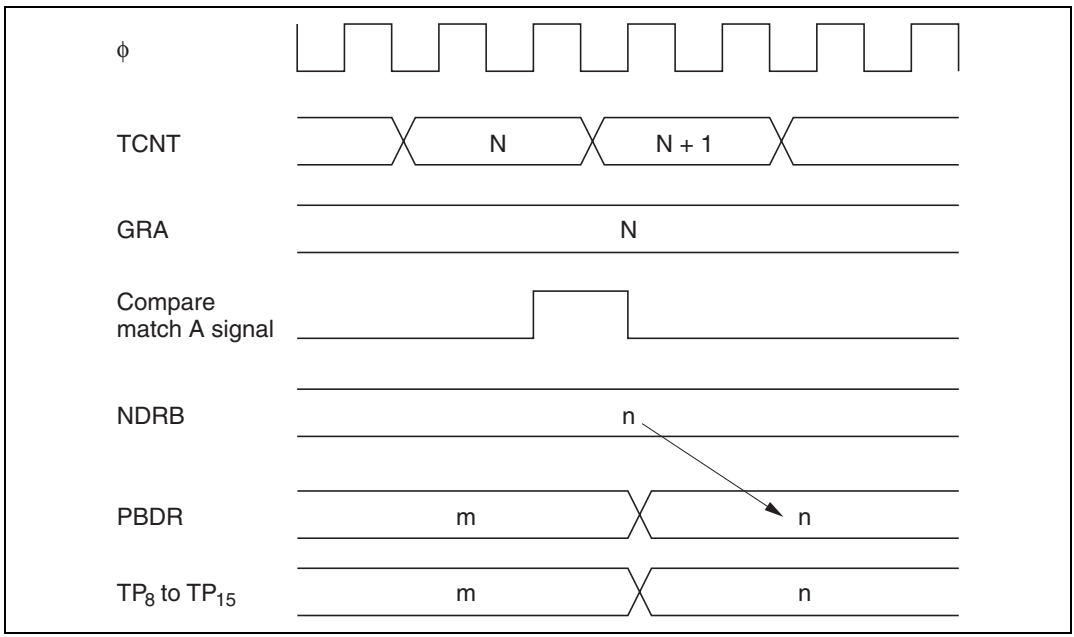

Figure 10.3 Timing of Transfer of Next Data Register Contents and Output (Example)

10.3.3 Normal TPC Output

Sample Setup Procedure for Normal TPC Output: Figure 10.4 shows a sample procedure for setting up normal TPC output.

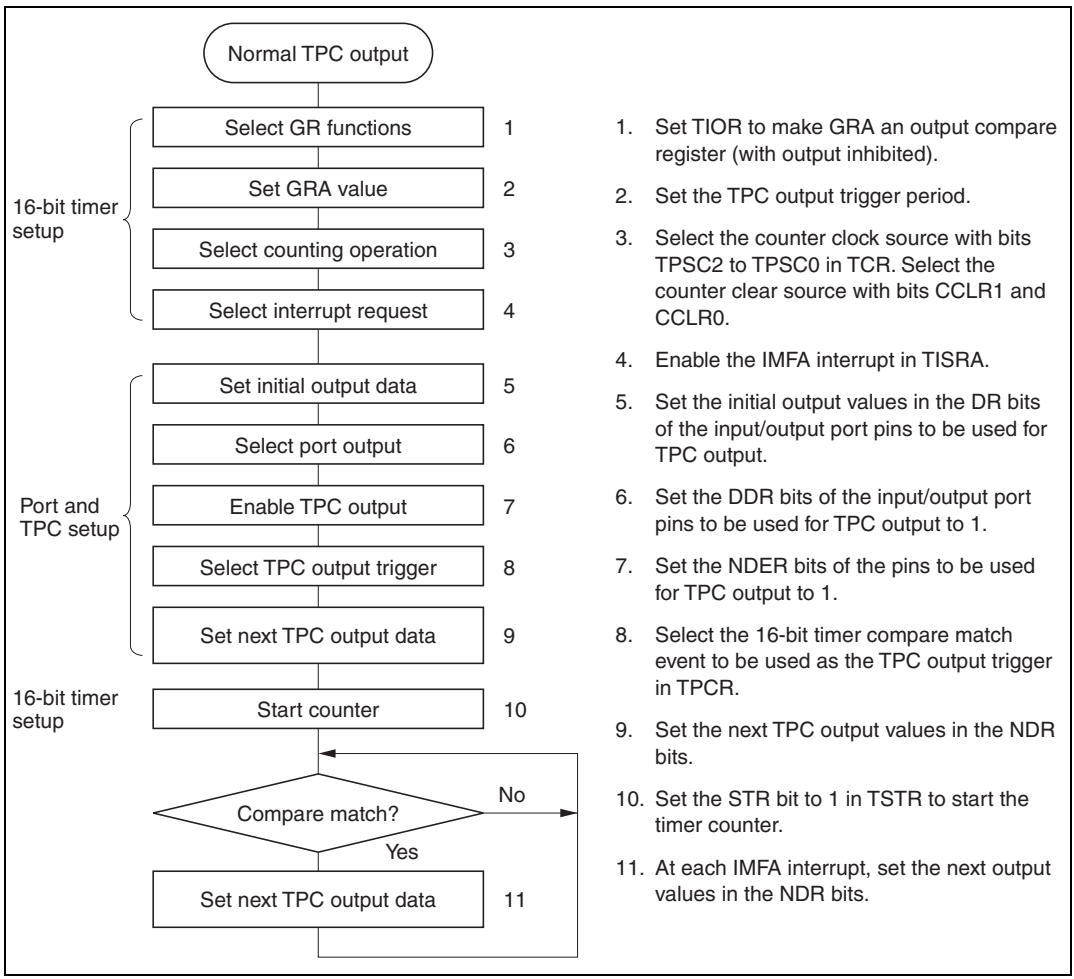

Figure 10.4 Setup Procedure for Normal TPC Output (Example)

Example of Normal TPC Output (Example of Five-Phase Pulse Output): Figure 10.5 shows an example in which the TPC is used for cyclic five-phase pulse output.

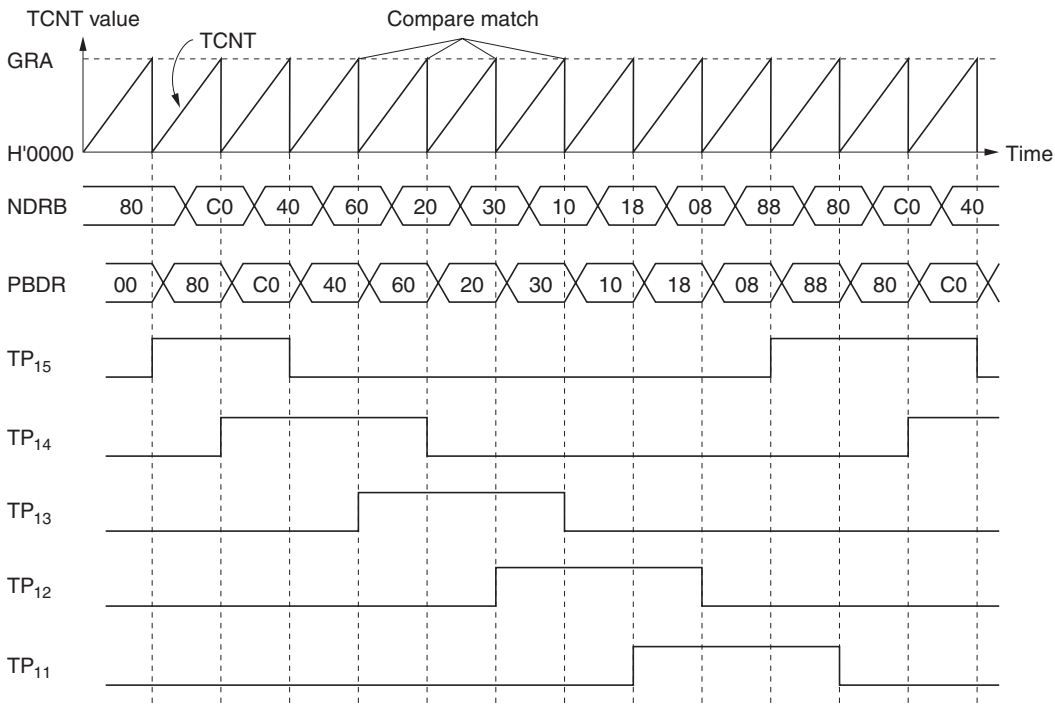

1. The 16-bit timer channel to be used as the output trigger channel is set up so that GRA is an output compare register and the counter will be cleared by compare match A. The trigger period is set in GRA. The IMIEA bit is set to 1 in TISRA to enable the compare match A interrupt.
2. H'F8 is written in PBDDR and NDERB, and bits G3CMS1, G3CMS0, G2CMS1, and G2CMS0 are set in TPCR to select compare match in the 16-bit timer channel set up in step 1 as the output trigger. Output data H'80 is written in NDRB.
3. The timer counter in this 16-bit timer channel is started. When compare match A occurs, the NDRB contents are transferred to PBDR and output. The compare match/input capture A (IMFA) interrupt service routine writes the next output data (H'C0) in NDRB.
4. Five-phase overlapping pulse output (one or two phases active at a time) can be obtained by writing H'40, H'60, H'20, H'30, H'10, H'18, H'08, H'88… at successive IMFA interrupts.

Figure 10.5 Normal TPC Output Example (Five-Phase Pulse Output)

10.3.4 Non-Overlapping TPC Output

Sample Setup Procedure for Non-Overlapping TPC Output: Figure 10.6 shows a sample procedure for setting up non-overlapping TPC output.

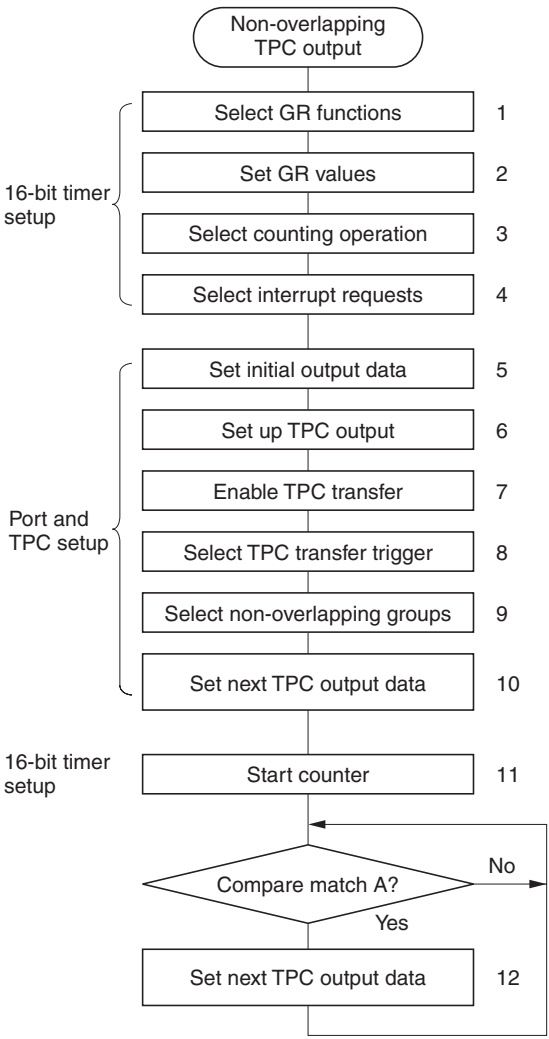

1. Set TIOR to make GRA and GRB output compare registers (with output inhibited).
2. Set the TPC output trigger period in GRB and the non-overlap margin in GRA.
3. Select the counter clock source with bits TPSC2 to TPSC0 in TCR. Select the counter clear source with bits CCLR1 and CCLR0.
4. Enable the IMFA interrupt in TISRA.
5. Set the initial output values in the DR bits of the input/output port pins to be used for TPC output.
6. Set the DDR bits of the input/output port pins to be used for TPC output to 1.
7. Set the NDER bits of the pins to be used for TPC output to 1.
8. In TPCR, select the 16-bit timer compare match event to be used as the TPC output trigger.
9. In TPMR, select the groups that will operate in non-overlap mode.
10. Set the next TPC output values in the NDR bits.
11. Set the STR bit to 1 in TSTR to start the timer counter.
12. At each IMFA interrupt, write the next output value in the NDR bits.

Figure 10.6 Setup Procedure for Non-Overlapping TPC Output (Example)

Example of Non-Overlapping TPC Output (Example of Four-Phase Complementary Non-Overlapping Output): Figure 10.7 shows an example of the use of TPC output for four-phase complementary non-overlapping pulse output.

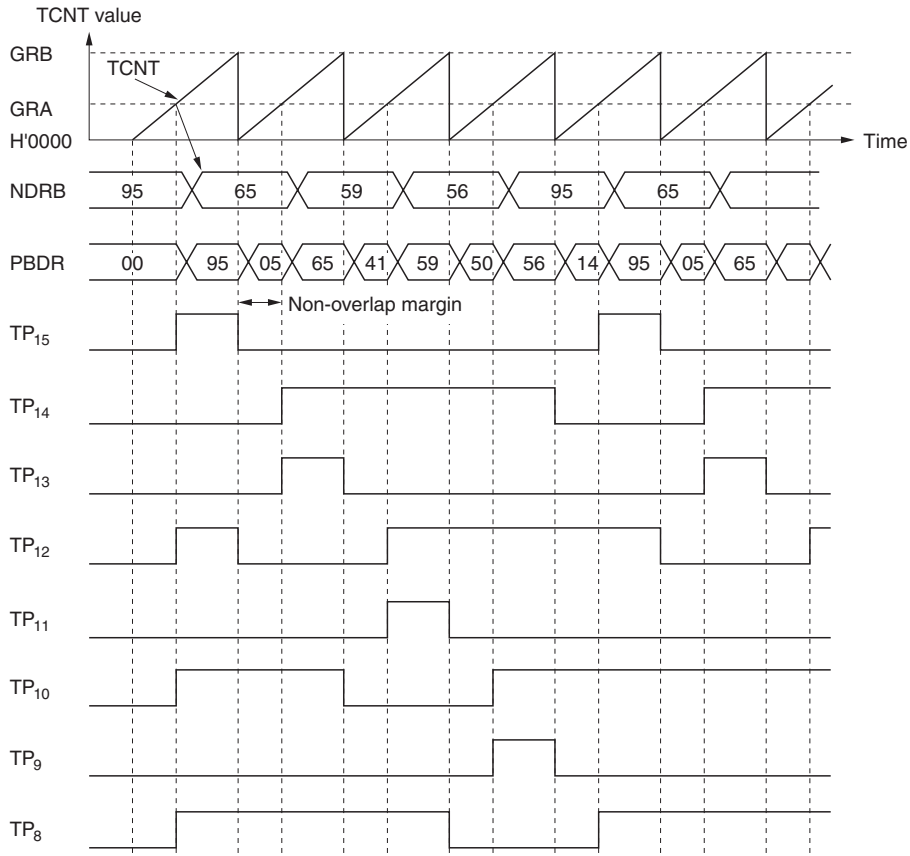

1. The 16-bit timer channel to be used as the output trigger channel is set up so that GRA and GRB are output compare registers and the counter will be cleared by compare match B. The TPC output trigger period is set in GRB. The non-overlap margin is set in GRA. The IMIEA bit is set to 1 in TISRA to enable IMFA interrupts.
2. H'FF is written in PBDDR and NDERB, and bits G3CMS1, G3CMS0, G2CMS1, and G2CMS0 are set in TPCR to select compare match in the 16-bit timer channel set up in step 1 as the output trigger. Bits G3NOV and G2NOV are set to 1 in TPMR to select non-overlapping output. Output data H'95 is written in NDRB.
3. The timer counter in this 16-bit timer channel is started. When compare match B occurs, outputs change from 1 to 0. When compare match A occurs, outputs change from 0 to 1 (the change from 0 to 1 is delayed by the value of GRA). The IMFA interrupt service routine writes the next output data (H'65) in NDRB.
4. Four-phase complementary non-overlapping pulse output can be obtained by writing H'59, H'56, H'95… at successive IMFA interrupts.

Figure 10.7 Non-Overlapping TPC Output Example (Four-Phase Complementary Non-Overlapping Pulse Output)

10.3.5 TPC Output Triggering by Input Capture

TPC output can be triggered by 16-bit timer input capture as well as by compare match. If GRA functions as an input capture register in the 16-bit timer channel selected in TPCR, TPC output will be triggered by the input capture signal. Figure 10.8 shows the timing.

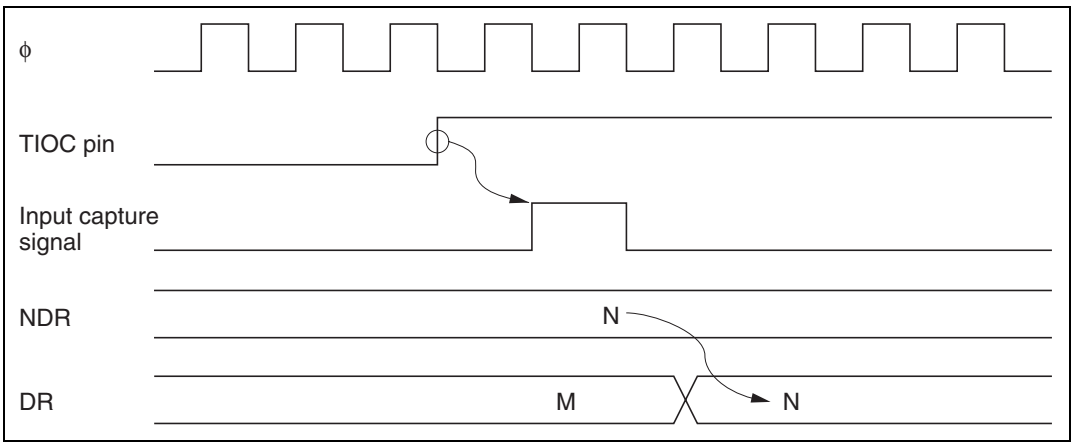

Figure 10.8 TPC Output Triggering by Input Capture (Example)

10.4 Usage Notes

10.4.1 Operation of TPC Output Pins

TP_0 to TP_{15} are multiplexed with 16-bit timer, address bus, and other pin functions. When 16-bit timer, or address bus output is enabled, the corresponding pins cannot be used for TPC output. The data transfer from NDR bits to DR bits takes place, however, regardless of the usage of the pin.

Pin functions should be changed only under conditions in which the output trigger event will not occur.

10.4.2 Note on Non-Overlapping Output

During non-overlapping operation, the transfer of NDR bit values to DR bits takes place as follows.

1. NDR bits are always transferred to DR bits at compare match A.
2. At compare match B, NDR bits are transferred only if their value is 0. Bits are not transferred if their value is 1.

Figure 10.9 illustrates the non-overlapping TPC output operation.

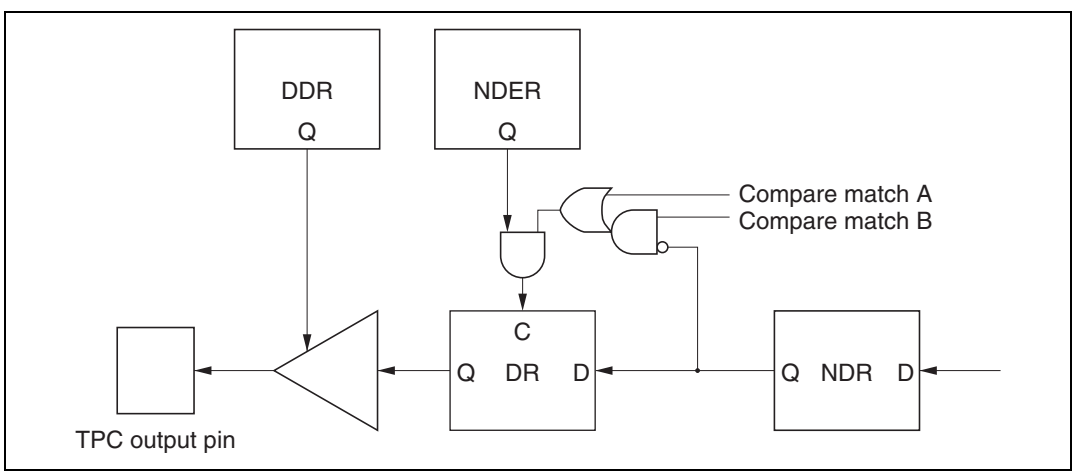

Figure 10.9 Non-Overlapping TPC Output

Therefore, 0 data can be transferred ahead of 1 data by making compare match B occur before compare match A. NDR contents should not be altered during the interval from compare match B to compare match A (the non-overlap margin).

This can be accomplished by having the IMFA interrupt service routine write the next data in NDR. The next data must be written before the next compare match B occurs.

Figure 10.10 shows the timing relationships.

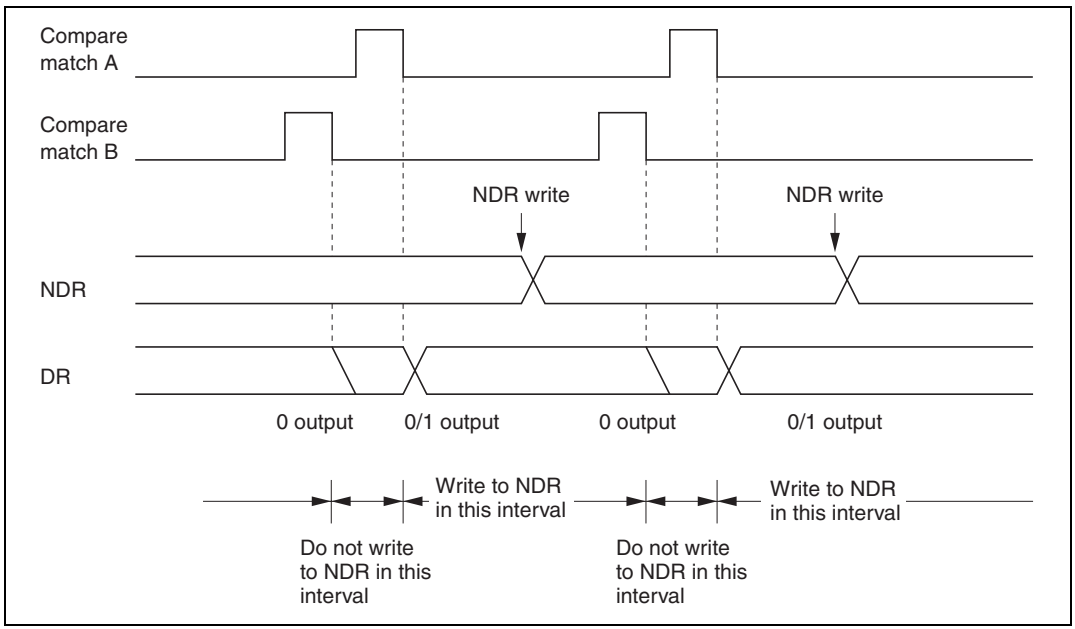

Figure 10.10 Non-Overlapping Operation and NDR Write Timing

Section 11 Watchdog Timer

11.1 Overview

The H8/3008 has an on-chip watchdog timer (WDT). The WDT has two selectable functions: it can operate as a watchdog timer to supervise system operation, or it can operate as an interval timer. As a watchdog timer, it generates a reset signal for the H8/3008 chip if a system crash allows the timer counter (TCNT) to overflow before being rewritten. In interval timer operation, an interval timer interrupt is requested at each TCNT overflow.

11.1.1 Features

WDT features are listed below.

- Selection of eight counter clock sources
  $\phi/2$, $\phi/32$, $\phi/64$, $\phi/128$, $\phi/256$, $\phi/512$, $\phi/2048$, or $\phi/4096$
- Interval timer option
- Timer counter overflow generates a reset signal or interrupt.
  The reset signal is generated in watchdog timer operation. An interval timer interrupt is generated in interval timer operation.
- Watchdog timer reset signal resets the entire H8/3008 internally, and can also be output externally.
  The reset signal generated by timer counter overflow during watchdog timer operation resets the entire H8/3008 internally. An external reset signal can be output from the $\overline{\text{RESO}}$ pin to reset other system devices simultaneously.

11.1.2 Block Diagram

Figure 11.1 shows a block diagram of the WDT.

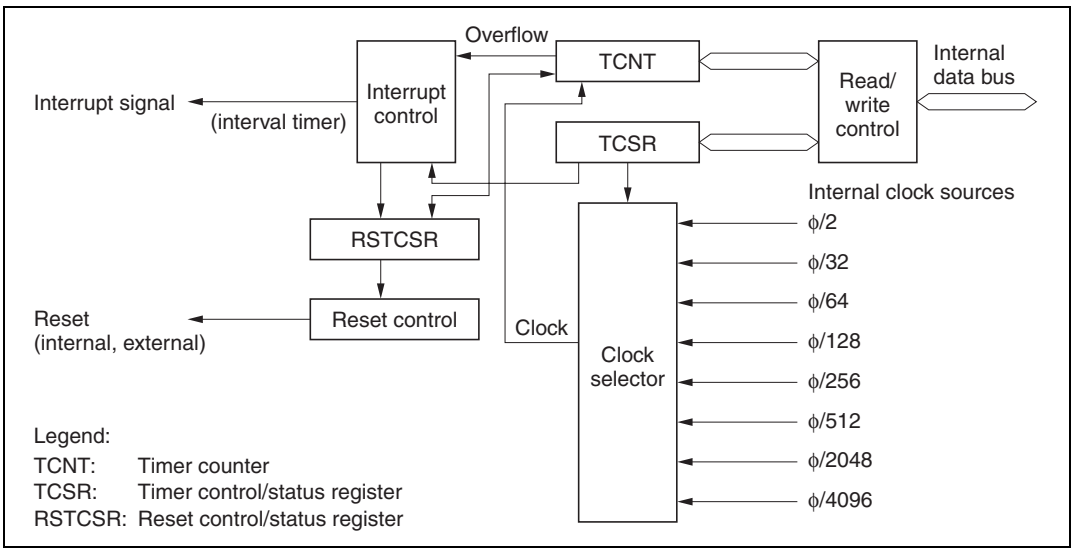

Figure 11.1 WDT Block Diagram

11.1.3 Pin Configuration

Table 11.1 describes the WDT output pin.

Table 11.1 WDT Pin

Name	Abbreviation	I/O	Function
Reset output	$\overline{\text{RESO}}$	Output*	External output of the watchdog timer reset signal

Note: * Open-drain output.

11.1.4 Register Configuration

Table 11.2 summarizes the WDT registers.

Table 11.2 WDT Registers

Address*1					
Write*2	**Read**	**Name**	**Abbreviation**	**R/W**	**Initial Value**
H'FFF8C	H'FFF8C	Timer control/status register	TCSR	R/(W)*3	H'18
	H'FFF8D	Timer counter	TCNT	R/W	H'00
H'FFF8E	H'FFF8F	Reset control/status register	RSTCSR	R/(W)*3	H'3F

Notes: 1. Lower 20 bits of the address in advanced mode.
2. Write word data starting at this address.
3. Only 0 can be written in bit 7, to clear the flag.

11.2 Register Descriptions

11.2.1 Timer Counter (TCNT)

TCNT is an 8-bit readable and writable up-counter.

Bit	7	6	5	4	3	2	1	0
Initial value	0	0	0	0	0	0	0	0
Read/Write	R/W	R/W	R/W	R/W	R/W	R/W	R/W	R/W

Note: The method for writing to TCNT is different from that for general registers to prevent inadvertent overwriting. For details see section 11.2.4, Notes on Register Access.

When the TME bit is set to 1 in TCSR, TCNT starts counting pulses generated from an internal clock source selected by bits CKS2 to CKS0 in TCSR. When the count overflows (changes from H'FF to H'00), the OVF bit is set to 1 in TCSR. TCNT is initialized to H'00 by a reset and when the TME bit is cleared to 0.

11.2.2 Timer Control/Status Register (TCSR)

TCSR is an 8-bit readable and writable register. Its functions include selecting the timer mode and clock source.

Bit	7	6	5	4	3	2	1	0
	OVF	WT/$\overline{\text{IT}}$	TME	—	—	CKS2	CKS1	CKS0
Initial value	0	0	0	1	1	0	0	0
Read/Write	R/(W)*	R/W	R/W	—	—	R/W	R/W	R/W

Clock select
These bits select the TCNT clock source

Reserved bits

Timer enable
Selects whether TCNT runs or halts

Timer mode select
Selects the mode

Overflow flag
Status flag indicating overflow

Notes: The method for writing to TCSR is different from that for general registers to prevent inadvertent overwriting. For details see section 11.2.4, Notes on Register Access.

* Only 0 can be written, to clear the flag.

Bits 7 to 5 are initialized to 0 by a reset and in standby mode. Bits 2 to 0 are initialized to 0 by a reset. In software standby mode bits 2 to 0 are not initialized, but retain their previous values.

Bit 7—Overflow Flag (OVF): This status flag indicates that the timer counter has overflowed from H'FF to H'00.

Bit 7 OVF	Description
0	[Clearing condition] Cleared by reading OVF when OVF = 1, then writing 0 in OVF (Initial value)
1	[Setting condition] Set when TCNT changes from H'FF to H'00

Bit 6—Timer Mode Select (WT/$\overline{\text{IT}}$): Selects whether to use the WDT as a watchdog timer or interval timer. If used as an interval timer, the WDT generates an interval timer interrupt request when TCNT overflows. If used as a watchdog timer, the WDT generates a reset signal when TCNT overflows.

Bit 6 WT/$\overline{\text{IT}}$	Description	
0	Interval timer: requests interval timer interrupts	(Initial value)
1	Watchdog timer: generates a reset signal	

Bit 5—Timer Enable (TME): Selects whether TCNT runs or is halted. When WT/$\overline{\text{IT}}$ = 1, clear the software standby bit (SSBY) to 0 in SYSCR before setting TME. When setting SSBY to 1, TME should be cleared to 0.

Bit 5 TME	Description	
0	TCNT is initialized to H'00 and halted	(Initial value)
1	TCNT is counting	

Bits 4 and 3—Reserved: These bits cannot be modified and are always read as 1.

Bits 2 to 0—Clock Select 2 to 0 (CKS2 to CKS0): These bits select one of eight internal clock sources, obtained by prescaling the system clock (ϕ), for input to TCNT.

Bit 2 CKS2	Bit 1 CKS1	Bit 0 CKS0	Description	
0	0	0	ϕ/2	(Initial value)
		1	ϕ /32	
	1	0	ϕ /64	
		1	ϕ /128	
1	0	0	ϕ /256	
		1	ϕ /512	
	1	0	ϕ /2048	
		1	ϕ /4096	

11.2.3 Reset Control/Status Register (RSTCSR)

RSTCSR is an 8-bit readable and writable register that indicates when a reset signal has been generated by watchdog timer overflow, and controls external output of the reset signal.

Bit	7	6	5	4	3	2	1	0
	WRST	RSTOE	—	—	—	—	—	—
Initial value	0	0	1	1	1	1	1	1
Read/Write	R/(W)*	R/W	—	—	—	—	—	—

Reserved bits

Reset output enable
Enables or disables external output of the reset signal

Watchdog timer reset
Indicates that a reset signal has been generated

Notes: The method for writing to RSTCSR is different from that for general registers to prevent inadvertent overwriting. For details see section 11.2.4, Notes on Register Access.

* Only 0 can be written in bit 7, to clear the flag.

Bits 7 and 6 are initialized by input of a reset signal at the $\overline{\text{RES}}$ pin. They are not initialized by reset signals generated by watchdog timer overflow.

Bit 7—Watchdog Timer Reset (WRST): During watchdog timer operation, this bit indicates that TCNT has overflowed and generated a reset signal. This reset signal resets the entire H8/3008 chip internally. If bit RSTOE is set to 1, this reset signal is also output (low) at the $\overline{\text{RESO}}$ pin to initialize external system devices. Note that there is no $\overline{\text{RESO}}$ pin in the versions with on-chip flash memory.

Bit 7 WRST	Description
0	[Clearing conditions] • Reset signal at $\overline{\text{RES}}$ pin. • Read WRST when WRST =1, then write 0 in WRST. (Initial value)
1	[Setting condition] Set when TCNT overflow generates a reset signal during watchdog timer operation

Bit 6—Reset Output Enable (RSTOE): Enables or disables external output at the $\overline{\text{RESO}}$ pin of the reset signal generated if TCNT overflows during watchdog timer operation. Note that there is no $\overline{\text{RESO}}$ pin in the versions with on-chip flash memory.

Bit 6 RSTOE	Description	
0	Reset signal is not output externally	(Initial value)
1	Reset signal is output externally	

Bits 5 to 0—Reserved: These bits cannot be modified and are always read as 1.

11.2.4 Notes on Register Access

The watchdog timer's TCNT, TCSR, and RSTCSR registers differ from other registers in being more difficult to write. The procedures for writing and reading these registers are given below.

Writing to TCNT and TCSR: These registers must be written by a word transfer instruction. They cannot be written by byte instructions. Figure 11.2 shows the format of data written to TCNT and TCSR. TCNT and TCSR both have the same write address. The write data must be contained in the lower byte of the written word. The upper byte must contain H'5A (password for TCNT) or H'A5 (password for TCSR). This transfers the write data from the lower byte to TCNT or TCSR.

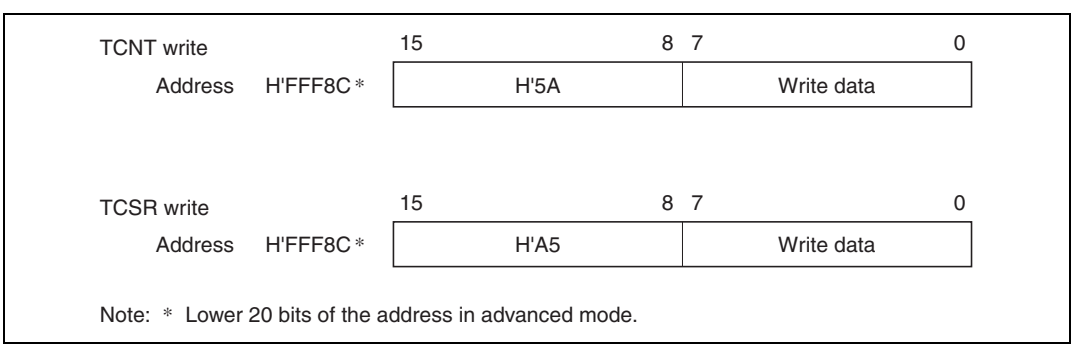

Figure 11.2 Format of Data Written to TCNT and TCSR

Writing to RSTCSR: RSTCSR must be written by a word transfer instruction. It cannot be written by byte transfer instructions. Figure 11.3 shows the format of data written to RSTCSR. To write 0 in the WRST bit, the write data must have H'A5 in the upper byte and H'00 in the lower byte. The data (H'00) in the lower byte is written to RSTCSR, clearing the WRST bit to 0. To write to the RSTOE bit, the upper byte must contain H'5A and the lower byte must contain the write data. Writing this word transfers a write data value into the RSTOE bit.

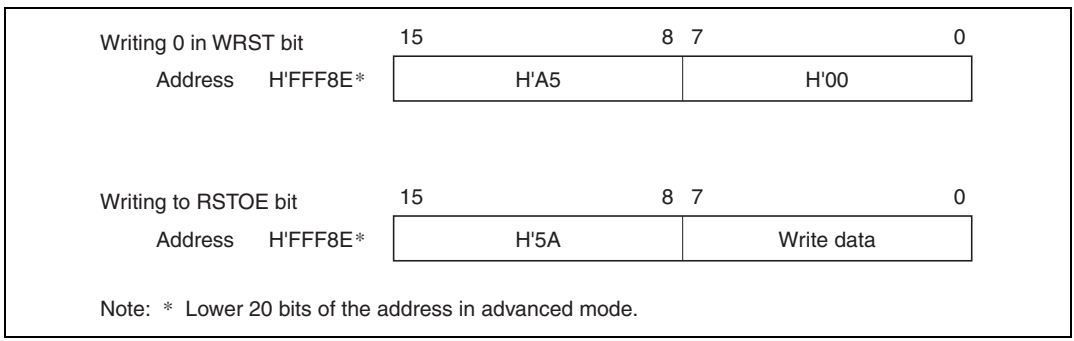

Figure 11.3 Format of Data Written to RSTCSR

Reading TCNT, TCSR, and RSTCSR: For reads of TCNT, TCSR, and RSTCSR, address H'FFF8C is assigned to TCSR, address H'FFF8D to TCNT, and address H'FFF8F to RSTCSR. These registers are therefore read like other registers. Byte transfer instructions can be used for reading. Table 11.3 lists the read addresses of TCNT, TCSR, and RSTCSR.

Table 11.3 Read Addresses of TCNT, TCSR, and RSTCSR

Address*	Register
H'FFF8C	TCSR
H'FFF8D	TCNT
H'FFF8F	RSTCSR

Note: * Lower 20 bits of the address in advanced mode.

11.3 Operation

Operations when the WDT is used as a watchdog timer and as an interval timer are described below.

11.3.1 Watchdog Timer Operation

Figure 11.4 illustrates watchdog timer operation. To use the WDT as a watchdog timer, set the WT/$\overline{\text{IT}}$ and TME bits to 1 in TCSR. Software must prevent TCNT overflow by rewriting the TCNT value (normally by writing H'00) before overflow occurs. If TCNT fails to be rewritten and overflows due to a system crash etc., the H8/3008 is internally reset for a duration of 518 states.

The watchdog reset signal can be externally output from the $\overline{\text{RESO}}$ pin to reset external system devices. The reset signal is output externally for 132 states. External output can be enabled or disabled by the RSTOE bit in RSTCSR.

A watchdog reset has the same vector as a reset generated by input at the $\overline{\text{RES}}$ pin. Software can distinguish a $\overline{\text{RES}}$ reset from a watchdog reset by checking the WRST bit in RSTCSR.

If a $\overline{\text{RES}}$ reset and a watchdog reset occur simultaneously, the $\overline{\text{RES}}$ reset takes priority.

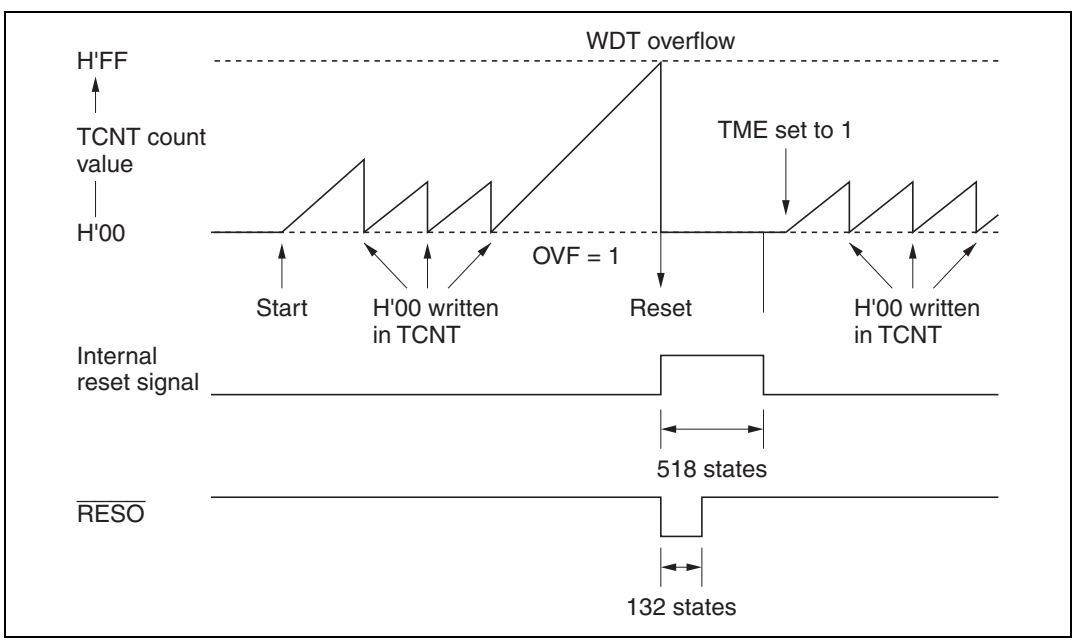

Figure 11.4 Operation in Watchdog Timer Mode

11.3.2 Interval Timer Operation

Figure 11.5 illustrates interval timer operation. To use the WDT as an interval timer, clear bit WT/$\overline{\text{IT}}$ to 0 and set bit TME to 1 in TCSR. An interval timer interrupt request is generated at each TCNT overflow. This function can be used to generate interval timer interrupts at regular intervals.

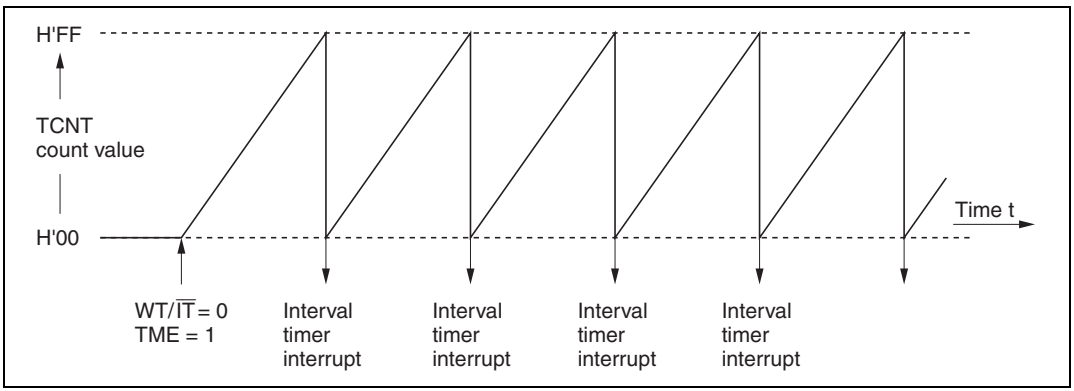

Figure 11.5 Interval Timer Operation

11.3.3 Timing of Setting of Overflow Flag (OVF)

Figure 11.6 shows the timing of setting of the OVF flag. The OVF flag is set to 1 when TCNT overflows. At the same time, a reset signal is generated in watchdog timer operation, or an interval timer interrupt is generated in interval timer operation.

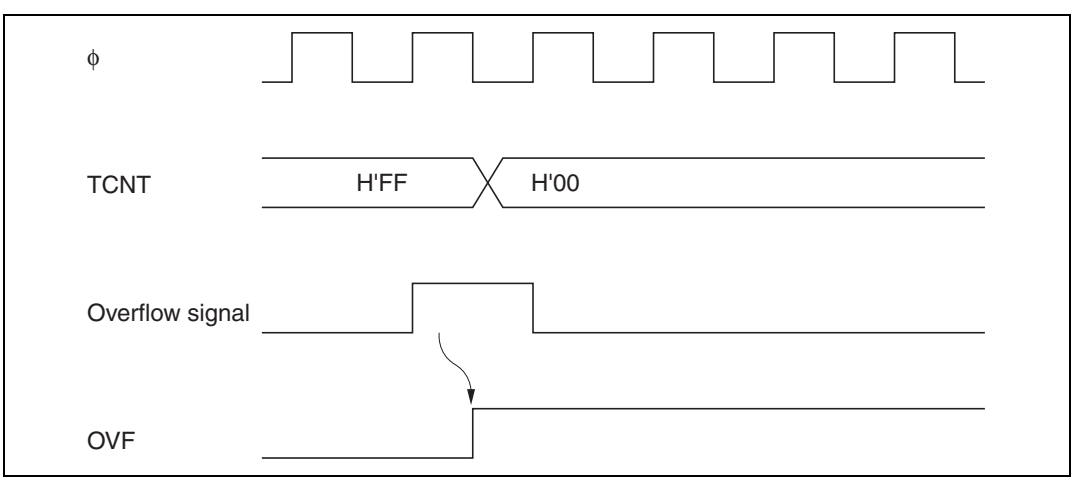

Figure 11.6 Timing of Setting of OVF

11.3.4 Timing of Setting of Watchdog Timer Reset Bit (WRST)

The WRST bit in RSTCSR is valid when bits WT/$\overline{\text{IT}}$ and TME are both set to 1 in TCSR.

Figure 11.7 shows the timing of setting of WRST and the internal reset timing. The WRST bit is set to 1 when TCNT overflows and OVF is set to 1. At the same time an internal reset signal is generated for the entire H8/3008 chip. This internal reset signal clears OVF to 0, but the WRST bit remains set to 1. The reset routine must therefore clear the WRST bit.

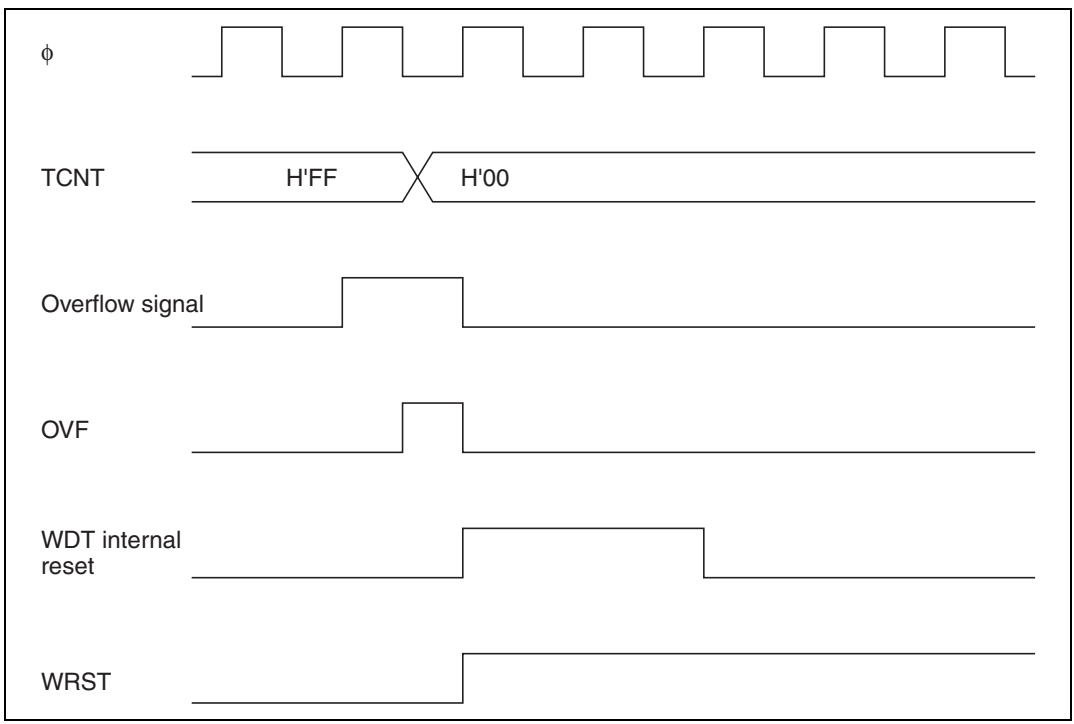

Figure 11.7 Timing of Setting of WRST Bit and Internal Reset

11.4 Interrupts

During interval timer operation, an overflow generates an interval timer interrupt (WOVI). The interval timer interrupt is requested whenever the OVF flag is set to 1 in TCSR.

11.5 Usage Notes

Contention between TCNT Write and Increment: If a timer counter clock pulse is generated during the T_3 state of a write cycle to TCNT, the write takes priority and the timer count is not incremented. See figure 11.8.

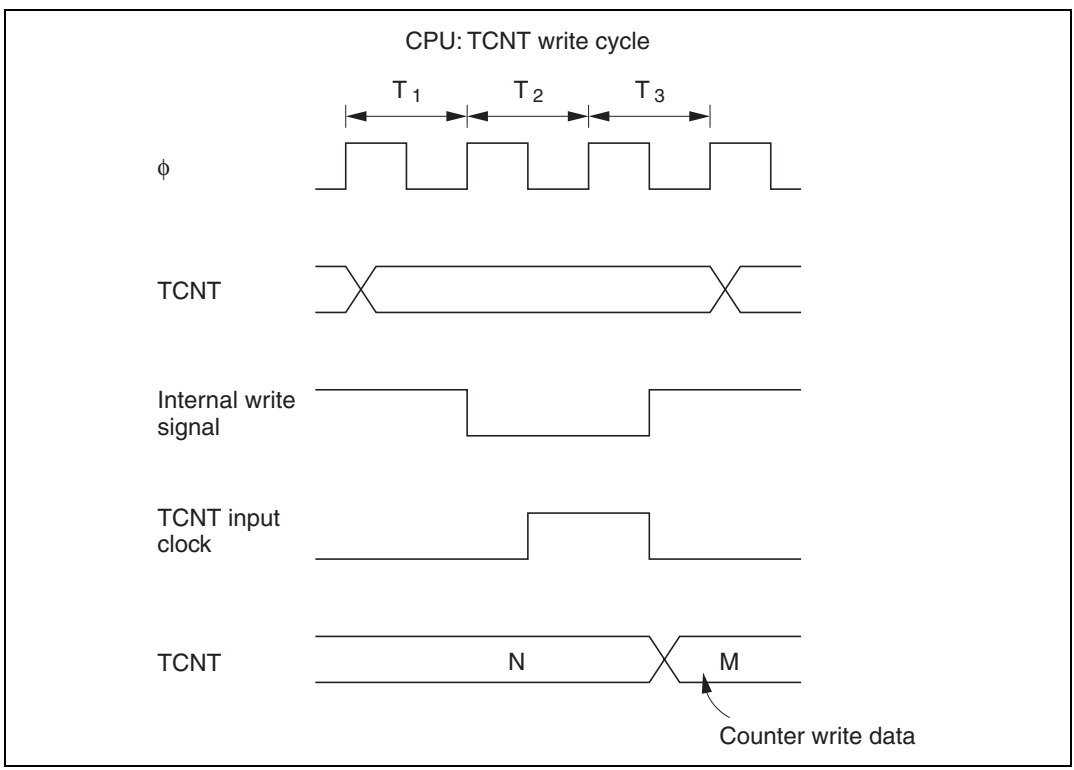

Figure 11.8 Contention between TCNT Write and Count up

Changing CKS2 to CKS0 Bit: Halt TCNT by clearing the TME bit to 0 in TCSR before changing the values of bits CKS2 to CKS0.

Section 12 Serial Communication Interface

12.1 Overview

The H8/3008 has a serial communication interface (SCI) with two independent channels. The two channels have identical functions. The SCI can communicate in both asynchronous and synchronous mode. It also has a multiprocessor communication function for serial communication among two or more processors.

When the SCI is not used, it can be halted to conserve power. Each SCI channel can be halted independently. For details, see section 18.6, Module Standby Function.

The SCI also has a smart card interface function conforming to the ISO/IEC 7816-3 (Identification Card) standard. This function supports serial communication with a smart card. Switching between the normal serial communication interface and the smart card interface is carried out by means of a register setting.

12.1.1 Features

SCI features are listed below.

- Selection of synchronous or asynchronous mode for serial communication

  Asynchronous mode

  Serial data communication is synchronized one character at a time. The SCI can communicate with a universal asynchronous receiver/transmitter (UART), asynchronous communication interface adapter (ACIA), or other chip that employs standard asynchronous communication. It can also communicate with two or more other processors using the multiprocessor communication function. There are twelve selectable serial data transfer formats.

  — Data length: 7 or 8 bits
  — Stop bit length: 1 or 2 bits
  — Parity: even/odd/none
  — Multiprocessor bit: 1 or 0
  — Receive error detection: parity, overrun, and framing errors
  — Break detection: by reading the RxD level directly when a framing error occurs

  Synchronous mode

  Serial data communication is synchronized with a clock signal. The SCI can communicate with other chips having a synchronous communication function.

  There is a single serial data communication format.

— Data length: 8 bits
— Receive error detection: overrun errors

- Full-duplex communication

  The transmitting and receiving sections are independent, so the SCI can transmit and receive simultaneously. The transmitting and receiving sections are both double-buffered, so serial data can be transmitted and received continuously.
- The following settings can be made for the serial data to be transferred:
  — LSB-first or MSB-first transfer
  — Inversion of data logic level
- Built-in baud rate generator with selectable bit rates
- Selectable transmit/receive clock sources: internal clock from baud rate generator, or external clock from the SCK pin
- Four types of interrupts

  Transmit-data-empty, transmit-end, receive-data-full, and receive-error interrupts are requested independently.

Features of the smart card interface are listed below.

- Asynchronous communication
  — Data length: 8 bits
  — Parity bits generated and checked
  — Error signal output in receive mode (parity error)
  — Error signal detect and automatic data retransmit in transmit mode
  — Supports both direct convention and inverse convention
- Built-in baud rate generator with selectable bit rates
- Three types of interrupts

  Transmit-data-empty, receive-data-full, and transmit/receive-error interrupts are requested independently.

12.1.2 Block Diagram

Figure 12.1 shows a block diagram of the SCI.

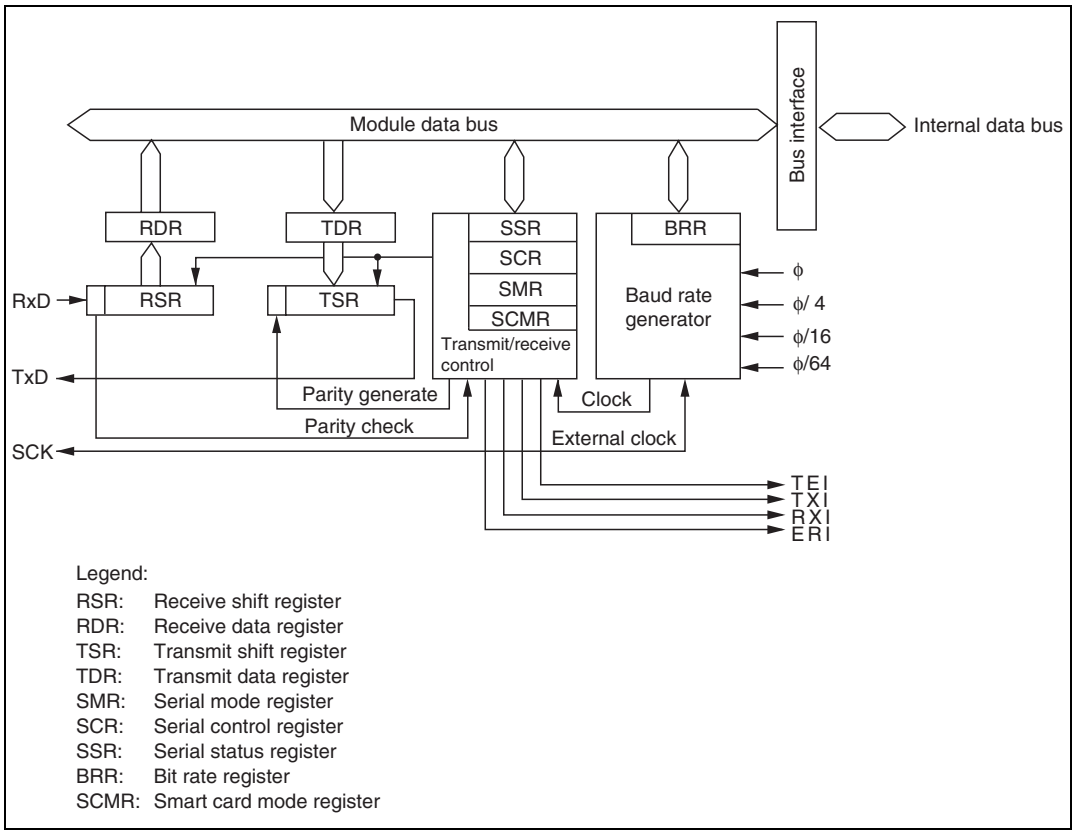

Figure 12.1 SCI Block Diagram

12.1.3 Pin Configuration

The SCI has serial pins for each channel as listed in table 12.1.

Table 12.1 SCI Pins

Channel	Name	Abbreviation	I/O	Function
0	Serial clock pin	SCK_0	Input/output	SCI_0 clock input/output
	Receive data pin	RxD_0	Input	SCI_0 receive data input
	Transmit data pin	TxD_0	Output	SCI_0 transmit data output
1	Serial clock pin	SCK_1	Input/output	SCI_1 clock input/output
	Receive data pin	RxD_1	Input	SCI_1 receive data input
	Transmit data pin	TxD_1	Output	SCI_1 transmit data output

12.1.4 Register Configuration

The SCI has internal registers as listed in table 12.2. These registers select asynchronous or synchronous mode, specify the data format and bit rate, control the transmitter and receiver sections, and specify switching between the serial communication interface and smart card interface.

Table 12.2 SCI Registers

Channel	Address*[1]	Name	Abbreviation	R/W	Initial Value
0	H'FFFB0	Serial mode register	SMR	R/W	H'00
	H'FFFB1	Bit rate register	BRR	R/W	H'FF
	H'FFFB2	Serial control register	SCR	R/W	H'00
	H'FFFB3	Transmit data register	TDR	R/W	H'FF
	H'FFFB4	Serial status register	SSR	R/(W)*[2]	H'84
	H'FFFB5	Receive data register	RDR	R	H'00
	H'FFFB6	Smart card mode register	SCMR	R/W	H'F2
1	H'FFFB8	Serial mode register	SMR	R/W	H'00
	H'FFFB9	Bit rate register	BRR	R/W	H'FF
	H'FFFBA	Serial control register	SCR	R/W	H'00
	H'FFFBB	Transmit data register	TDR	R/W	H'FF
	H'FFFBC	Serial status register	SSR	R/(W)*[2]	H'84
	H'FFFBD	Receive data register	RDR	R	H'00
	H'FFFBE	Smart card mode register	SCMR	R/W	H'F2

Notes: 1. Indicates the lower 20 bits of the address in advanced mode.
2. Only 0 can be written, to clear flags.

12.2 Register Descriptions

12.2.1 Receive Shift Register (RSR)

RSR is the register that receives serial data.

Bit	7	6	5	4	3	2	1	0
Read/Write	—	—	—	—	—	—	—	—

The SCI loads serial data input at the RxD pin into RSR in the order received, LSB (bit 0) first, thereby converting the data to parallel data. When one byte of data has been received, it is automatically transferred to RDR. The CPU cannot read or write RSR directly.

12.2.2 Receive Data Register (RDR)

RDR is the register that stores received serial data.

Bit	7	6	5	4	3	2	1	0
Initial value	0	0	0	0	0	0	0	0
Read/Write	R	R	R	R	R	R	R	R

When the SCI has received one byte of serial data, it transfers the received data from RSR into RDR for storage, completing the receive operation. RSR is then ready to receive the next data. This double-buffering allows data to be received continuously.

RDR is a read-only register. Its contents cannot be modified by the CPU. RDR is initialized to H'00 by a reset and in standby mode.

12.2.3 Transmit Shift Register (TSR)

TSR is the register that transmits serial data.

Bit	7	6	5	4	3	2	1	0
Read/Write	—	—	—	—	—	—	—	—

The SCI loads transmit data from TDR to TSR, then transmits the data serially from the TxD pin, LSB (bit 0) first. After transmitting one data byte, the SCI automatically loads the next transmit data from TDR into TSR and starts transmitting it. If the TDRE flag is set to 1 in SSR, however, the SCI does not load the TDR contents into TSR. The CPU cannot read or write RSR directly.

12.2.4 Transmit Data Register (TDR)

TDR is an 8-bit register that stores data for serial transmission.

Bit	7	6	5	4	3	2	1	0
Initial value	1	1	1	1	1	1	1	1
Read/Write	R/W	R/W	R/W	R/W	R/W	R/W	R/W	R/W

When the SCI detects that TSR is empty, it moves transmit data written in TDR from TDR into TSR and starts serial transmission. Continuous serial transmission is possible by writing the next transmit data in TDR during serial transmission from TSR.

The CPU can always read and write TDR. TDR is initialized to H'FF by a reset and in standby mode.

12.2.5 Serial Mode Register (SMR)

SMR is an 8-bit register that specifies the SCI's serial communication format and selects the clock source for the baud rate generator.

Bit	7	6	5	4	3	2	1	0
	C/$\overline{A}$	CHR	PE	O/$\overline{E}$	STOP	MP	CKS1	CKS0
Initial value	0	0	0	0	0	0	0	0
Read/Write	R/W	R/W	R/W	R/W	R/W	R/W	R/W	R/W

Clock select 1/0
These bits select the baud rate generator's clock source

Multiprocessor mode
Selects the multiprocessor function

Stop bit length
Selects the stop bit length

Parity mode
Selects even or odd parity

Parity enable
Selects whether a parity bit is added

Character length
Selects character length in asynchronous mode

Communication mode
Selects asynchronous or synchronous mode

The CPU can always read and write SMR. SMR is initialized to H'00 by a reset and in standby mode.

Bit 7—Communication Mode (C/$\overline{A}$)/GSM Mode (GM): The function of this bit differs for the normal serial communication interface and for the smart card interface. Its function is switched with the SMIF bit in SCMR.

For Serial Communication Interface (SMIF Bit in SCMR Cleared to 0): Selects whether the SCI operates in asynchronous or synchronous mode.

Bit 7 C/$\overline{A}$	Description	
0	Asynchronous mode	(Initial value)
1	Synchronous mode	

For Smart Card Interface (SMIF Bit in SCMR Set to 1): Selects GSM mode for the smart card interface.

Bit 7 GM	Description	
0	The TEND flag is set 12.5 etu after the start bit	(Initial value)
1	The TEND flag is set 11.0 etu after the start bit	

Note: etu: Elementary time unit (time required to transmit one bit)

Bit 6—Character Length (CHR): Selects 7-bit or 8-bits data length in asynchronous mode. In synchronous mode, the data length is 8 bits regardless of the CHR setting,

Bit 6 CHR	Description	
0	8-bit data	(Initial value)
1	7-bit data*	

Note: * When 7-bit data is selected, the MSB (bit 7) of TDR is not transmitted.

Bit 5—Parity Enable (PE): In asynchronous mode, this bit enables or disables the addition of a parity bit to transmit data, and the checking of the parity bit in receive data. In synchronous mode, the parity bit is neither added nor checked, regardless of the PE bit setting.

Bit 5 PE	Description	
0	Parity bit not added or checked	(Initial value)
1	Parity bit added and checked*	

Note: * When PE bit is set to 1, an even or odd parity bit is added to transmit data according to the even or odd parity mode selection by the O/$\overline{E}$ bit, and the parity bit in receive data is checked to see that it matches the even or odd mode selected by the O/$\overline{E}$ bit.

Bit 4—Parity Mode (O/$\overline{E}$): Specifies whether even parity or odd parity is used for parity addition and checking. The O/$\overline{E}$ bit setting is only valid when the PE bit is set to 1, enabling parity bit addition and checking, in asynchronous mode. The O/$\overline{E}$ bit setting is ignored in synchronous mode, or when parity addition and checking is disabled in asynchronous mode.

Bit 4 O/$\overline{E}$	Description	
0	Even parity*[1]	(Initial value)
1	Odd parity*[2]	

Notes: 1. When even parity is selected, the parity bit added to transmit data makes an even number of 1s in the transmitted character and parity bit combined. Receive data must have an even number of 1s in the received character and parity bit combined.
2. When odd parity is selected, the parity bit added to transmit data makes an odd number of 1s in the transmitted character and parity bit combined. Receive data must have an odd number of 1s in the received character and parity bit combined.

Bit 3—Stop Bit Length (STOP): Selects one or two stop bits in asynchronous mode. This setting is used only in asynchronous mode. In synchronous mode no stop bit is added, so the STOP bit setting is ignored.

Bit 3 STOP	Description	
0	1 stop bit*[1]	(Initial value)
1	2 stop bits*[2]	

Notes: 1. One stop bit (with value 1) is added to the end of each transmitted character.
2. Two stop bits (with value 1) are added to the end of each transmitted character.

In receiving, only the first stop bit is checked, regardless of the STOP bit setting. If the second stop bit is 1, it is treated as a stop bit. If the second stop bit is 0, it is treated as the start bit of the next incoming character.

Bit 2—Multiprocessor Mode (MP): Selects a multiprocessor format. When a multiprocessor format is selected, parity settings made by the PE and O/$\overline{E}$ bits are ignored. The MP bit setting is valid only in asynchronous mode. It is ignored in synchronous mode.

For further information on the multiprocessor communication function, see section 12.3.3, Multiprocessor Communication.

Bit 2 MP	Description	
0	Multiprocessor function disabled	(Initial value)
1	Multiprocessor format selected	

Bits 1 and 0—Clock Select 1 and 0 (CKS1, CKS0): These bits select the clock source for the on-chip baud rate generator. Four clock sources can be selected by the CKS1 and CKS0 bits: ϕ, $\phi/4$, $\phi/16$, and $\phi/64$.

For the relationship between the clock source, bit rate register setting, and baud rate, see section 12.2.8, Bit Rate Register (BRR).

Bit 1 CKS1	Bit 0 CKS0	Description	
0	0	ϕ	(Initial value)
0	1	$\phi/4$	
1	0	$\phi/16$	
1	1	$\phi/64$	

12.2.6 Serial Control Register (SCR)

SCR register enables or disables the SCI transmitter and receiver, enables or disables serial clock output in asynchronous mode, enables or disables interrupts, and selects the transmit/receive clock source.

Bit	7	6	5	4	3	2	1	0
	TIE	RIE	TE	RE	MPIE	TEIE	CKE1	CKE0
Initial value	0	0	0	0	0	0	0	0
Read/Write	R/W	R/W	R/W	R/W	R/W	R/W	R/W	R/W

Clock enable 1/0
These bits select the SCI clock source

Transmit-end interrupt enable
Enables or disables transmit-end interrupts (TEI)

Multiprocessor interrupt enable
Enables or disables multiprocessor interrupts

Receive enable
Enables or disables the receiver

Transmit enable
Enables or disables the transmitter

Receive interrupt enable
Enables or disables receive-data-full interrupts (RxI) and receive-error interrupts (ERI)

Transmit interrupt enable
Enables or disables transmit-data-empty interrupts (TxI)

The CPU can always read and write SCR. SCR is initialized to H'00 by a reset and in standby mode.

Bit 7—Transmit Interrupt Enable (TIE): Enables or disables the transmit-data-empty interrupt (TXI) requested when the TDRE flag in SSR is set to 1 due to transfer of serial transmit data from TDR to TSR.

Bit 7 TIE	Description	
0	Transmit-data-empty interrupt request (TXI) is disabled*	(Initial value)
1	Transmit-data-empty interrupt request (TXI) is enabled	

Note: * TXI interrupt requests can be cleared by reading the value 1 from the TDRE flag, then clearing it to 0; or by clearing the TIE bit to 0.

Bit 6—Receive Interrupt Enable (RIE): Enables or disables the receive-data-full interrupt (RXI) requested when the RDRF flag in SSR is set to 1 due to transfer of serial receive data from RSR to RDR; also enables or disables the receive-error interrupt (ERI).

Bit 6 RIE	Description	
0	Receive-data-full (RXI) and receive-error (ERI) interrupt requests are disabled*	(Initial value)
1	Receive-data-full (RXI) and receive-error (ERI) interrupt requests are enabled	

Note: * RXI and ERI interrupt requests can be cleared by reading the value 1 from the RDRF, FER, PER, or ORER flag, then clearing the flag to 0; or by clearing the RIE bit to 0.

Bit 5—Transmit Enable (TE): Enables or disables the start of SCI serial transmitting operations.

Bit 5 TE	Description	
0	Transmitting disabled*[1]	(Initial value)
1	Transmitting enabled*[2]	

Notes: 1. The TDRE flag is fixed at 1 in SSR.
2. In the enabled state, serial transmission starts when the TDRE flag in SSR is cleared to 0 after writing of transmit data into TDR. Select the transmit format in SMR before setting the TE bit to 1.

Bit 4—Receive Enable (RE): Enables or disables the start of SCI serial receiving operations.

Bit 4 RE	Description
0	Receiving disabled*[1] (Initial value)
1	Receiving enabled*[2]

Notes: 1. Clearing the RE bit to 0 does not affect the RDRF, FER, PER, and ORER flags. These flags retain their previous values.
2. In the enabled state, serial receiving starts when a start bit is detected in asynchronous mode, or serial clock input is detected in synchronous mode. Select the receive format in SMR before setting the RE bit to 1.

Bit 3—Multiprocessor Interrupt Enable (MPIE): Enables or disables multiprocessor interrupts. The MPIE bit setting is valid only in asynchronous mode, and only if the MP bit is set to 1 in SMR. The MPIE bit setting is ignored in synchronous mode or when the MP bit is cleared to 0.

Bit 3 MPIE	Description
0	Multiprocessor interrupts are disabled (normal receive operation) (Initial value) [Clearing conditions] • The MPIE bit is cleared to 0 • MPB = 1 in received data
1	Multiprocessor interrupts are enabled* Receive-data-full interrupts (RXI), receive-error interrupts (ERI), and setting of the RDRF, FER, and ORER status flags in SSR are disabled until data with the multiprocessor bit set to 1 is received.

Note: * The SCI does not transfer receive data from RSR to RDR, does not detect receive errors, and does not set the RDRF, FER, and ORER flags in SSR. When it receives data in which MPB = 1, the SCI sets the MPB bit to 1 in SSR, automatically clears the MPIE bit to 0, enables RXI and ERI interrupts (if the TIE and RIE bits in SCR are set to 1), and allows the FER and ORER flags to be set.

Bit 2—Transmit-End interrupt Enable (TEIE): Enables or disables the transmit-end interrupt (TEI) requested if TDR does not contain valid transmit data when the MSB is transmitted.

Bit 2 TEIE	Description	
0	Transmit-end interrupt requests (TEI) are disabled*	(Initial value)
1	Transmit-end interrupt requests (TEI) are enabled*	

Note: * TEI interrupt requests can be cleared by reading the value 1 from the TDRE flag in SSR, then clearing the TDRE flag to 0, thereby also clearing the TEND flag to 0; or by clearing the TEIE bit to 0.

Bits 1 and 0—Clock Enable 1 and 0 (CKE1, CKE0): The function of these bits differs for the normal serial communication interface and for the smart card interface. Their function is switched with the SMIF bit in SCMR.

For serial communication interface (SMIF bit in SCMR cleared to 0): These bits select the SCI clock source and enable or disable clock output from the SCK pin. Depending on the settings of CKE1 and CKE0, the SCK pin can be used for generic input/output, serial clock output, or serial clock input.

The CKE0 setting is valid only in asynchronous mode, and only when the SCI is internally clocked (CKE1 = 0). The CKE0 setting is ignored in synchronous mode, or when an external clock source is selected (CKE1 = 1). Select the SCI operating mode in SMR before setting the CKE1 and CKE0 bits . For further details on selection of the SCI clock source, see table 12.9 in section 12.3, Operation.

Bit 1 CKE1	Bit 0 CKE0	Description	
0	0	Asynchronous mode	Internal clock, SCK pin available for generic input/output*[1]
		Synchronous mode	Internal clock, SCK pin used for serial clock output*[1]
0	1	Asynchronous mode	Internal clock, SCK pin used for clock output*[2]
		Synchronous mode	Internal clock, SCK pin used for serial clock output
1	0	Asynchronous mode	External clock, SCK pin used for clock input*[3]
		Synchronous mode	External clock, SCK pin used for serial clock input
1	1	Asynchronous mode	External clock, SCK pin used for clock input*[3]
		Synchronous mode	External clock, SCK pin used for serial clock input

Notes: 1. Initial value
2. The output clock frequency is the same as the bit rate.
3. The input clock frequency is 16 times the bit rate.

For smart card interface (SMIF bit in SCMR set to 1): These bits, together with the GM bit in SMR, determine whether the SCK pin is used for generic input/output or as the serial clock output pin.

SMR GM	Bit 1 CKE1	Bit 0 CKE0	Description	
0	0	0	SCK pin available for generic input/output	(Initial value)
0	0	1	SCK pin used for clock output	
1	0	0	SCK pin output fixed low	
1	0	1	SCK pin used for clock output	
1	1	0	SCK pin output fixed high	
1	1	1	SCK pin used for clock output	

12.2.7 Serial Status Register (SSR)

SSR is an 8-bit register containing multiprocessor bit values, and status flags that indicate the operating status of the SCI.

Bit	7	6	5	4	3	2	1	0
	TDRE	RDRF	ORER	FER/ERS	PER	TEND	MPB	MPBT
Initial value	1	0	0	0	0	1	0	0
Read/Write	R/(W)*1	R/(W)*1	R/(W)*1	R/(W)*1	R/(W)*1	R	R	R/W

Multiprocessor bit transfer
Value of multiprocessor bit to be transmitted

Multiprocessor bit
Stores the received multiprocessor bit value

Transmit end*2
Status flag indicating end of transmission

Parity error
Status flag indicating detection of a receive parity error

Framing error (FER)/Error signal status (ERS)*2
Status flag indicating detection of a receive framing error, or flag indicating detection of an error signal

Overrun error
Status flag indicating detection of a receive overrun error

Receive data register full
Status flag indicating that data has been received and stored in RDR

Transmit data register empty
Status flag indicating that transmit data has been transferred from TDR into TSR and new data can be written in TDR

Notes: 1. Only 0 can be written, to clear the flag.
2. Function differs between the normal serial communication interface and the smart card interface.

The CPU can always read and write SSR, but cannot write 1 in the TDRE, RDRF, ORER, PER, and FER flags. These flags can be cleared to 0 only if they have first been read while set to 1. The TEND and MPB flags are read-only bits that cannot be written.

SSR is initialized to H'84 by a reset and in standby mode.

Bit 7—Transmit Data Register Empty (TDRE): Indicates that the SCI has loaded transmit data from TDR into TSR and the next serial data can be written in TDR.

Bit 7 TDRE	Description
0	TDR contains valid transmit data [Clearing condition] Read TDRE when TDRE = 1, then write 0 in TDRE
1	TDR does not contain valid transmit data (Initial value) [Setting conditions] • The chip is reset or enters standby mode • The TE bit in SCR is cleared to 0 • TDR contents are loaded into TSR, so new data can be written in TDR

Bit 6—Receive Data Register Full (RDRF): Indicates that RDR contains new receive data.

Bit 6 RDRF	Description
0	RDR does not contain new receive data (Initial value) [Clearing conditions] • The chip is reset or enters standby mode • Read RDRF when RDRF = 1, then write 0 in RDRF
1	RDR contains new receive data [Setting condition] Serial data is received normally and transferred from RSR to RDR

Note: The RDR contents and the RDRF flag are not affected by detection of receive errors or by clearing of the RE bit to 0 in SCR. They retain their previous values. If the RDRF flag is still set to 1 when reception of the next data ends, an overrun error will occur and the receive data will be lost.

Bit 5—Overrun Error (ORER): Indicates that data reception ended abnormally due to an overrun error.

Bit 5 ORER	Description
0	Receiving is in progress or has ended normally*1 (Initial value) [Clearing conditions] • The chip is reset or enters standby mode • Read ORER when ORER = 1, then write 0 in ORER
1	A receive overrun error occurred*2 [Setting condition] Reception of the next serial data ends when RDRF = 1

Notes: 1. Clearing the RE bit to 0 in SCR does not affect the ORER flag, which retains its previous value.
2. RDR continues to hold the receive data prior to the overrun error, so subsequent receive data is lost. Serial receiving cannot continue while the ORER flag is set to 1. In synchronous mode, serial transmitting is also disabled.

Bit 4—Framing Error (FER)/Error Signal Status (ERS): The function of this bit differs for the normal serial communication interface and for the smart card interface. Its function is switched with the SMIF bit in SCMR.

For serial communication interface (SMIF bit in SCMR cleared to 0): Indicates that data reception ended abnormally due to a framing error in asynchronous mode.

Bit 4 FER	Description
0	Receiving is in progress or has ended normally*1 (Initial value) [Clearing conditions] • The chip is reset or enters standby mode • Read FER when FER = 1, then write 0 in FER
1	A receive framing error occurred [Setting condition] The stop bit at the end of the receive data is checked for a value of 1, and is found to be 0.*2

Notes: 1. Clearing the RE bit to 0 in SCR does not affect the FER flag, which retains its previous value.
2. When the stop bit length is 2 bits, only the first bit is checked for a value of 1. The second stop bit is not checked. When a framing error occurs the SCI transfers the receive data into RDR but does not set the RDRF flag. Serial receiving cannot continue while the FER flag is set to 1. In synchronous mode, serial transmitting is also disabled.

For Smart Card Interface (SMIF Bit in SCMR Set to 1): Indicates the status of the error signal sent back from the receiving side during transmission. Framing errors are not detected in smart card interface mode.

Bit 4 ERS	Description
0	Normal reception, no error signal* (Initial value) [Clearing conditions] • The chip is reset or enters standby mode • Read ERS when ERS = 1, then write 0 in ERS
1	An error signal has been sent from the receiving side indicating detection of a parity error [Setting condition] The error signal is low when sampled

Note: * Clearing the TE bit to 0 in SCR does not affect the ERS flag, which retains its previous value.

Bit 3—Parity Error (PER): Indicates that reception of data with parity added ended abnormally due to a parity error in asynchronous mode.

Bit 3 PER	Description
0	Receiving is in progress or has ended normally*[1] (Initial value) [Clearing conditions] • The chip is reset or enters standby mode • Read PER when PER = 1, then write 0 in PER
1	A receive parity error occurred*[2] [Setting condition] The number of 1s in receive data, including the parity bit, does not match the even or odd parity setting of O/$\overline{E}$ in SMR

Notes: 1. Clearing the RE bit to 0 in SCR does not affect the PER flag, which retains its previous value.
2. When a parity error occurs the SCI transfers the receive data into RDR but does not set the RDRF flag. Serial receiving cannot continue while the PER flag is set to 1. In synchronous mode, serial transmitting is also disabled.

Bit 2—Transmit End (TEND): The function of this bit differs for the normal serial communication interface and for the smart card interface. Its function is switched with the SMIF bit in SCMR.

For Serial Communication Interface (SMIF Bit in SCMR Cleared to 0): Indicates that when the last bit of a serial character was transmitted TDR did not contain valid transmit data, so transmission has ended. The TEND flag is a read-only bit and cannot be written.

Bit 2 TEND	Description
0	Transmission is in progress [Clearing condition] Read TDRE when TDRE = 1, then write 0 in TDRE
1	End of transmission (Initial value) [Setting conditions] • The chip is reset or enters standby mode • The TE bit in SCR is cleared to 0 • TDRE is 1 when the last bit of a 1-byte serial transmit character is transmitted

For Smart Card Interface (SMIF Bit in SCMR Set to 1): Indicates that when the last bit of a serial character was transmitted TDR did not contain valid transmit data, so transmission has ended. The TEND flag is a read-only bit and cannot be written.

Bit 2 TEND	Description
0	Transmission is in progress [Clearing condition] Read TDRE when TDRE = 1, then write 0 in TDRE
1	End of transmission (Initial value) [Setting conditions] • The chip is reset or enters standby mode • The TE bit is cleared to 0 in SCR and the FER/ERS bit is also cleared to 0 • TDRE is 1 and FER/ERS is 0 (normal transmission) 2.5 etu (when GM = 0) or 1.0 etu (when GM = 1) after a 1-byte serial character is transmitted

Note: etu: Elementary time unit (time required to transmit one bit)

Bit 1—Multiprocessor bit (MPB): Stores the value of the multiprocessor bit in the receive data when a multiprocessor format is used in asynchronous mode. MPB is a read-only bit, and cannot be written.

Bit 1 MPB	Description	
0	Multiprocessor bit value in receive data is 0*	(Initial value)
1	Multiprocessor bit value in receive data is 1	

Note: * If the RE bit in SCR is cleared to 0 when a multiprocessor format is selected, MPB retains its previous value.

Bit 0—Multiprocessor Bit Transfer (MPBT): Stores the value of the multiprocessor bit added to transmit data when a multiprocessor format in selected for transmitting in asynchronous mode.

The MPBT bit setting is ignored in synchronous mode, when a multiprocessor format is not selected, or when the SCI cannot transmit.

Bit 0 MPBT	Description	
0	Multiprocessor bit value in transmit data is 0	(Initial value)
1	Multiprocessor bit value in transmit data is 1	

12.2.8 Bit Rate Register (BRR)

BRR is an 8-bit register that sets the serial transmit/receive bit rate in accordance with the baud rate generator operating clock selected by bits CKS0 and CKS1 in SMR.

Bit	7	6	5	4	3	2	1	0
Initial value	1	1	1	1	1	1	1	1
Read/Write	R/W	R/W	R/W	R/W	R/W	R/W	R/W	R/W

BRR can be read or written to by the CPU at all times.

BRR is initialized to H'FF by a reset and in standby mode.

As baud rate generator control is performed independently for each channel, different values can be set for each channel.

Table 12.3 shows examples of BRR settings in asynchronous mode. Table 12.4 shows examples of BRR settings in synchronous mode.

Table 12.3 Examples of Bit Rates and BRR Settings in Asynchronous Mode

Bit Rate	ϕ (MHz)											
	2			2.097152			2.4576			3		
(bit/s)	n	N	Error (%)	n	N	Error (%)	n	N	Error (%)	n	N	Error (%)
110	1	141	0.03	1	148	–0.04	1	174	–0.26	1	212	0.03
150	1	103	0.16	1	108	0.21	1	127	0.00	1	155	0.16
300	0	207	0.16	0	217	0.21	0	255	0.00	1	77	0.16
600	0	103	0.16	0	108	0.21	0	127	0.00	0	155	0.16
1200	0	51	0.16	0	54	–0.70	0	63	0.00	0	77	0.16
2400	0	25	0.16	0	26	1.14	0	31	0.00	0	38	0.16
4800	0	12	0.16	0	13	–2.48	0	15	0.00	0	19	–2.34
9600	0	6	–6.99	0	6	–2.48	0	7	0.00	0	9	–2.34
19200	0	2	8.51	0	2	13.78	0	3	0.00	0	4	–2.34
31250	0	1	0.00	0	1	4.86	0	1	22.88	0	2	0.00
38400	0	1	–18.62	0	1	–14.67	0	1	0.00	—	—	—

Bit Rate	ϕ (MHz)											
	3.6864			4			4.9152			5		
(bit/s)	n	N	Error (%)	n	N	Error (%)	n	N	Error (%)	n	N	Error (%)
110	2	64	0.70	2	70	0.03	2	86	0.31	2	88	–0.25
150	1	191	0.00	1	207	0.16	1	255	0.00	2	64	0.16
300	1	95	0.00	1	103	0.16	1	127	0.00	1	129	0.16
600	0	191	0.00	0	207	0.16	0	255	0.00	1	64	0.16
1200	0	95	0.00	0	103	0.16	0	127	0.00	0	129	0.16
2400	0	47	0.00	0	51	0.16	0	63	0.00	0	64	0.16
4800	0	23	0.00	0	25	0.16	0	31	0.00	0	32	–1.36
9600	0	11	0.00	0	12	0.16	0	15	0.00	0	15	1.73
19200	0	5	0.00	0	6	–6.99	0	7	0.00	0	7	1.73
31250	—	—	—	0	3	0.00	0	4	–1.70	0	4	0.00
38400	0	2	0.00	0	2	8.51	0	3	0.00	0	3	1.73

Bit Rate (bit/s)	ϕ (MHz) 6			6.144			7.3728			8		
	n	N	Error (%)	n	N	Error (%)	n	N	Error (%)	n	N	Error (%)
110	2	106	–0.44	2	108	0.08	2	130	–0.07	2	141	0.03
150	2	77	0.16	2	79	0.00	2	95	0.00	2	103	0.16
300	1	155	0.16	1	159	0.00	1	191	0.00	1	207	0.16
600	1	77	0.16	1	79	0.00	1	95	0.00	1	103	0.16
1200	0	155	0.16	0	159	0.00	0	191	0.00	0	207	0.16
2400	0	77	0.16	0	79	0.00	0	95	0.00	0	103	0.16
4800	0	38	0.16	0	39	0.00	0	47	0.00	0	51	0.16
9600	0	19	–2.34	0	19	0.00	0	23	0.00	0	25	0.16
19200	0	9	–2.34	0	9	0.00	0	11	0.00	0	12	0.16
31250	0	5	0.00	0	5	2.40	0	6	5.33	0	7	0.00
38400	0	4	–2.34	0	4	0.00	0	5	0.00	0	6	–6.99

Bit Rate (bit/s)	ϕ (MHz) 9.8304			10			12			12.288		
	n	N	Error (%)	n	N	Error (%)	n	N	Error (%)	n	N	Error (%)
110	2	174	–0.26	2	177	–0.25	2	212	0.03	2	217	0.08
150	2	127	0.00	2	129	0.16	2	155	0.16	2	159	0.00
300	1	255	0.00	2	64	0.16	2	77	0.16	2	79	0.00
600	1	127	0.00	1	129	0.16	1	155	0.16	1	159	0.00
1200	0	255	0.00	1	64	0.16	1	77	0.16	1	79	0.00
2400	0	127	0.00	0	129	0.16	0	155	0.16	0	159	0.00
4800	0	63	0.00	0	64	0.16	0	77	0.16	0	79	0.00
9600	0	31	0.00	0	32	–1.36	0	38	0.16	0	39	0.00
19200	0	15	0.00	0	15	1.73	0	19	–2.34	0	19	0.00
31250	0	9	–1.70	0	9	0.00	0	11	0.00	0	11	2.40
38400	0	7	0.00	0	7	1.73	0	9	–2.34	0	9	0.00

Bit Rate (bit/s)	ϕ (MHz) 13			14			14.7456			16		
	n	N	Error (%)	n	N	Error (%)	n	N	Error (%)	n	N	Error (%)
110	2	230	–0.08	2	248	–0.17	3	64	0.70	3	70	0.03
150	2	168	0.16	2	181	0.16	2	191	0.00	2	207	0.16
300	2	84	–0.43	2	90	0.16	2	95	0.00	2	103	0.16
600	1	168	0.16	1	181	0.16	1	191	0.00	1	207	0.16
1200	1	84	–0.43	1	90	0.16	1	95	0.00	1	103	0.16
2400	0	168	0.16	0	181	0.16	0	191	0.00	0	207	0.16
4800	0	84	–0.43	0	90	0.16	0	95	0.00	0	103	0.16
9600	0	41	0.76	0	45	–0.93	0	47	0.00	0	51	0.16
19200	0	20	0.76	0	22	–0.93	0	23	0.00	0	25	0.16
31250	0	12	0.00	0	13	0.00	0	14	–1.70	0	15	0.00
38400	0	10	–3.82	0	10	3.57	0	11	0.00	0	12	0.16

Bit Rate (bit/s)	ϕ (MHz) 18			20			25		
	n	N	Error (%)	n	N	Error (%)	n	N	Error (%)
110	3	79	–0.12	3	88	–0.25	3	110	–0.02
150	2	233	0.16	3	64	0.16	3	80	–0.47
300	2	116	0.16	2	129	0.16	2	162	0.15
600	1	233	0.16	2	64	0.16	2	80	–0.47
1200	1	116	0.16	1	129	0.16	1	162	0.15
2400	0	233	0.16	1	64	0.16	1	80	–0.47
4800	0	116	0.16	0	129	0.16	0	162	0.15
9600	0	58	–0.69	0	64	0.16	0	80	–0.47
19200	0	28	1.02	0	32	–1.36	0	40	–0.76
31250	0	17	0.00	0	19	0.00	0	24	0.00
38400	0	14	–2.34	0	15	1.73	0	19	1.73

Table 12.4 Examples of Bit Rates and BRR Settings in Synchronous Mode

Bit Rate	φ (MHz)																	
	2		4		8		10		13		16		18		20		25	
(bit/s)	n	N	n	N	n	N	n	N	n	N	n	N	n	N	n	N	n	N
110	3	70	—	—	—	—	—	—	—	—	—	—	—	—	—	—	—	—
250	2	124	2	249	3	124	—	—	3	202	3	249	—	—	—	—	—	—
500	1	249	2	124	2	249	—	—	3	101	3	124	3	140	3	155	—	—
1k	1	124	1	249	2	124	—	—	2	202	2	249	3	69	3	77	3	97
2.5k	0	199	1	99	1	199	1	249	2	80	2	99	2	112	2	124	2	155
5k	0	99	0	199	1	99	1	124	1	162	1	199	1	224	1	249	2	77
10k	0	49	0	99	0	199	0	249	1	80	1	99	1	112	1	124	1	155
25k	0	19	0	39	0	79	0	99	0	129	0	159	0	179	0	199	0	249
50k	0	9	0	19	0	39	0	49	0	64	0	79	0	89	0	99	0	124
100k	0	4	0	9	0	19	0	24	—	—	0	39	0	44	0	49	0	62
250k	0	1	0	3	0	7	0	9	0	12	0	15	0	17	0	19	0	24
500k	0	0*	0	1	0	3	0	4	—	—	0	7	0	8	0	9	—	—
1M			0	0*	0	1	—	—	—	—	0	3	0	4	0	4	—	—
2M					0	0*	—	—	—	—	0	1	—	—	—	—	—	—
2.5M					—	—	0	0*	—	—	—	—	—	—	—	—	—	—
4M											0	0*	—	—	—	—	—	—

Legend:

Blank: No setting available

—: Setting possible, but error occurs

*: Continuous transmission/reception not possible

Note: Settings with an error of 1% or less are recommended.

The BRR setting is calculated as follows:

Asynchronous mode:

$$N = \frac{\phi}{64 \times 2^{2n-1} \times B} \times 10^6 - 1$$

Synchronous mode:

$$N = \frac{\phi}{8 \times 2^{2n-1} \times B} \times 10^6 - 1$$

Legend:
B: Bit rate (bit/s)
N: BRR setting for baud rate generator ($0 \leq N \leq 255$)
ϕ: System clock frequency (MHz)
n: Baud rate generator input clock (n = 0, 1, 2, 3)
(For the clock sources and values of n, see the following table.)

		SMR Settings	
n	**Clock Source**	**CKS1**	**CKS0**
0	ϕ	0	0
1	$\phi/4$	0	1
2	$\phi/16$	1	0
3	$\phi/64$	1	1

The bit rate error in asynchronous mode is calculated as follows:

$$\text{Error (\%)} = \left\{ \frac{\phi \times 10^6}{(N + 1) \times B \times 64 \times 2^{2n-1}} - 1 \right\} \times 100$$

Table 12.5 shows the maximum bit rates in asynchronous mode for various system clock frequencies. Tables 12.6 and 12.7 show the maximum bit rates with external clock input.

Table 12.5 Maximum Bit Rates for Various Frequencies (Asynchronous Mode)

		Settings	
ϕ (MHz)	**Maximum Bit Rate (bit/s)**	**n**	**N**
2	62500	0	0
2.097152	65536	0	0
2.4576	76800	0	0
3	93750	0	0
3.6864	115200	0	0
4	125000	0	0
4.9152	153600	0	0
5	156250	0	0
6	187500	0	0
6.144	192000	0	0
7.3728	230400	0	0
8	250000	0	0
9.8304	307200	0	0
10	312500	0	0
12	375000	0	0
12.288	384000	0	0
14	437500	0	0
14.7456	460800	0	0
16	500000	0	0
17.2032	537600	0	0
18	562500	0	0
20	625000	0	0
25	781250	0	0

Table 12.6 Maximum Bit Rates with External Clock Input (Asynchronous Mode)

ϕ (MHz)	External Input Clock (MHz)	Maximum Bit Rate (bit/s)
2	0.5000	31250
2.097152	0.5243	32768
2.4576	0.6144	38400
3	0.7500	46875
3.6864	0.9216	57600
4	1.0000	62500
4.9152	1.2288	76800
5	1.2500	78125
6	1.5000	93750
6.144	1.5360	96000
7.3728	1.8432	115200
8	2.0000	125000
9.8304	2.4576	153600
10	2.5000	156250
12	3.0000	187500
12.288	3.0720	192000
14	3.5000	218750
14.7456	3.6864	230400
16	4.0000	250000
17.2032	4.3008	268800
18	4.5000	281250
20	5.0000	312500
25	6.2500	390625

Table 12.7 Maximum Bit Rates with External Clock Input (Synchronous Mode)

ϕ (MHz)	External Input Clock (MHz)	Maximum Bit Rate (bit/s)
2	0.3333	333333.3
4	0.6667	666666.7
6	1.0000	1000000.0
8	1.3333	1333333.3
10	1.6667	1666666.7
12	2.0000	2000000.0
14	2.3333	2333333.3
16	2.6667	2666666.7
18	3.0000	3000000.0
20	3.3333	3333333.3
25	4.1667	4166666.7

12.3 Operation

12.3.1 Overview

The SCI can carry out serial communication in two modes: asynchronous mode in which synchronization is achieved character by character, and synchronous mode in which synchronization is achieved with clock pulses. A smart card interface is also supported as a serial communication function for an IC card interface.

Selection of asynchronous or synchronous mode and the transmission format for the normal serial communication interface is made in SMR, as shown in table 12.8. The SCI clock source is selected by the C/$\overline{A}$ bit in SMR and the CKE1 and CKE0 bits in SCR, as shown in table 12.9.

For details of the procedures for switching between LSB-first and MSB-first mode and inverting the data logic level, see section 13.2.1, Smart Card Mode Register (SCMR).

For selection of the smart card interface format, see section 13.3.3, Data Format.

Asynchronous Mode

- Data length is selectable: 7 or 8 bits
- Parity and multiprocessor bits are selectable, and so is the stop bit length (1 or 2 bits). These selections determine the communication format and character length.
- In receiving, it is possible to detect framing errors, parity errors, overrun errors, and the break state.
- An internal or external clock can be selected as the SCI clock source.
  - When an internal clock is selected, the SCI operates using the on-chip baud rate generator, and can output a serial clock signal with a frequency matching the bit rate.
  - When an external clock is selected, the external clock input must have a frequency 16 times the bit rate. (The on-chip baud rate generator is not used.)

Synchronous Mode

- The communication format has a fixed 8-bit data length.
- In receiving, it is possible to detect overrun errors.
- An internal or external clock can be selected as the SCI clock source.
  - When an internal clock is selected, the SCI operates using the on-chip baud rate generator, and can output a serial clock signal to external devices.
  - When an external clock is selected, the SCI operates on the input serial clock. The on-chip baud rate generator is not used.

Smart Card Interface

- One frame consists of 8-bit data and a parity bit.
- In transmitting, a guard time of at least two elementary time units (2 etu) is provided between the end of the parity bit and the start of he next frame. (An elementary time unit is the time required to transmit one bit.)
- In receiving, if a parity error is detected, a low error signal level is output for 1 etu, beginning 10.5 etu after the start bit..
- In transmitting, if an error signal is received, the same data is automatically transmitted again after at least 2 etu.
- Only asynchronous communication is supported. There is no synchronous communication function.

  For details of smart card interface operation, see section 13, Smart Card Interface.

Table 12.8 SMR Settings and Serial Communication Formats

SMR Settings						SCI Communication Format			
Bit 7 C/$\overline{A}$	Bit 6 CHR	Bit 2 MP	Bit 5 PE	Bit 3 STOP	Mode	Data Length	Multi-processor Bit	Parity Bit	Stop Bit Length
0	0	0	0	0	Asyn-chronous mode	8-bit data	Absent	Absent	1 bit
				1					2 bits
			1	0				Present	1 bit
				1					2 bits
	1		0	0		7-bit data		Absent	1 bit
				1					2 bits
			1	0				Present	1 bit
				1					2 bits
	0	1	—	0	Asyn-chronous mode (multi-processor format)	8-bit data	Present	Absent	1 bit
			—	1					2 bits
	1		—	0		7-bit data			1 bit
			—	1					2 bits
1	—	—	—	—	Syn-chronous mode	8-bit data	Absent		None

Table 12.9 SMR and SCR Settings and SCI Clock Source Selection

SMR	SCR Setting			SCI Transmit/Receive clock	
Bit 7 C/$\overline{A}$	Bit 1 CKE1	Bit 0 CKE0	Mode	Clock Source	SCK Pin Function
0	0	0	Asynchronous mode	Internal	SCI does not use the SCK pin
		1			Outputs clock with frequency matching the bit rate
	1	0		External	Inputs clock with frequency 16 times the bit rate
		1			
1	0	0	Synchronous mode	Internal	Outputs the serial clock
		1			
	1	0		External	Inputs the serial clock
		1			

12.3.2 Operation in Asynchronous Mode

In asynchronous mode, each transmitted or received character begins with a start bit and ends with one or two stop bits. Serial communication is synchronized one character at a time.

The transmitting and receiving sections of the SCI are independent, so full-duplex communication is possible. The transmitter and the receiver are both double-buffered, so data can be written and read while transmitting and receiving are in progress, enabling continuous transmitting and receiving.

Figure 12.2 shows the general format of asynchronous serial communication. In asynchronous serial communication the communication line is normally held in the mark (high) state. The SCI monitors the line and starts serial communication when the line goes to the space (low) state, indicating a start bit. One serial character consists of a start bit (low), data (LSB first), parity bit (high or low), and one or two stop bits (high), in that order.

When receiving in asynchronous mode, the SCI synchronizes at the falling edge of the start bit. The SCI samples each data bit on the eighth pulse of a clock with a frequency 16 times the bit rate. Receive data is latched at the center of each bit.

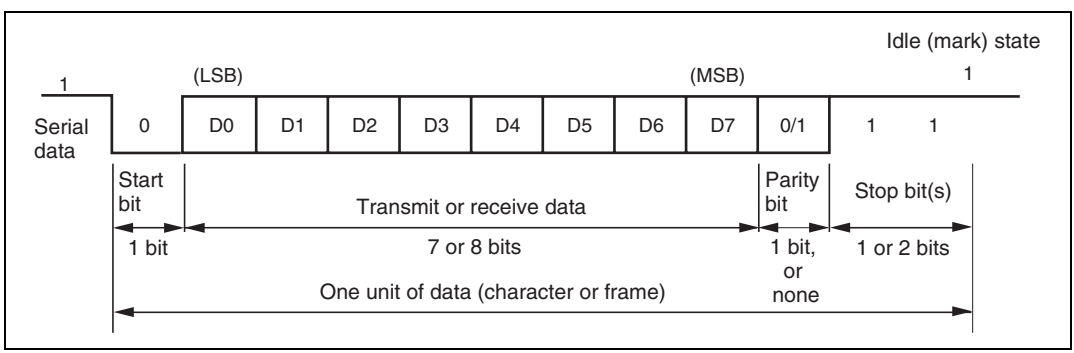

Figure 12.2 Data Format in Asynchronous Communication (Example: 8-Bit Data with Parity and 2 Stop Bits)

Communication Formats: Table 12.10 shows the 12 communication formats that can be selected in asynchronous mode. The format is selected by settings in SMR.

Table 12.10 Serial Communication Formats (Asynchronous Mode)

SMR Settings				Serial Communication Format and Frame Length
CHR	PE	MP	STOP	1 2 3 4 5 6 7 8 9 10 11 12
0	0	0	0	S 8-bit data STOP
0	0	0	1	S 8-bit data STOP STOP
0	1	0	0	S 8-bit data P STOP
0	1	0	1	S 8-bit data P STOP STOP
1	0	0	0	S 7-bit data STOP
1	0	0	1	S 7-bit data STOP STOP
1	1	0	0	S 7-bit data P STOP
1	1	0	1	S 7-bit data P STOP STOP
0	—	1	0	S 8-bit data MPB STOP
0	—	1	1	S 8-bit data MPB STOP STOP
1	—	1	0	S 7-bit data MPB STOP
1	—	1	1	S 7-bit data MPB STOP STOP

Legend:

S: Start bit

STOP: Stop bit

P: Parity bit

MPB: Multiprocessor bit

Clock: An internal clock generated by the on-chip baud rate generator or an external clock input from the SCK pin can be selected as the SCI transmit/receive clock. The clock source is selected by the C/$\overline{A}$ bit in SMR and bits CKE1 and CKE0 in SCR. For details of SCI clock source selection, see table 12.9.

When an external clock is input at the SCK pin, it must have a frequency 16 times the desired bit rate.

When the SCI is operated on an internal clock, it can output a clock signal at the SCK pin. The frequency of this output clock is equal to the bit rate. The phase is aligned as shown in figure 12.3 so that the rising edge of the clock occurs at the center of each transmit data bit.

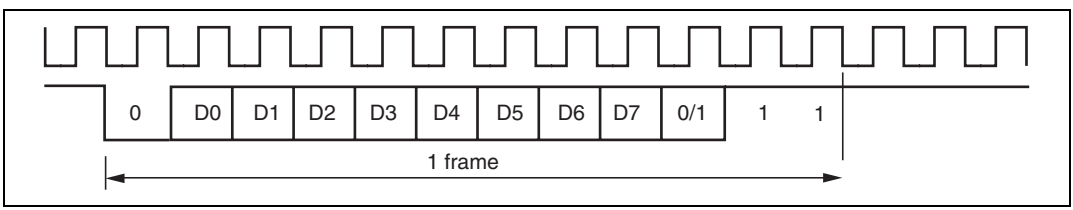

Figure 12.3 Phase Relationship between Output Clock and Serial Data (Asynchronous Mode)

Transmitting and Receiving Data:

- SCI Initialization (Asynchronous Mode): Before transmitting or receiving data, clear the TE and RE bits to 0 in SCR, then initialize the SCI as follows.

  When changing the communication mode or format, always clear the TE and RE bits to 0 before following the procedure given below. Clearing TE to 0 sets the TDRE flag to 1 and initializes TSR. Clearing RE to 0, however, does not initialize the RDRF, PER, FER, and ORER flags, or RDR, which retain their previous contents.

  When an external clock is used the clock should not be stopped during initialization or subsequent operation, since operation will be unreliable in this case.

Figure 12.4 shows a sample flowchart for initializing the SCI.

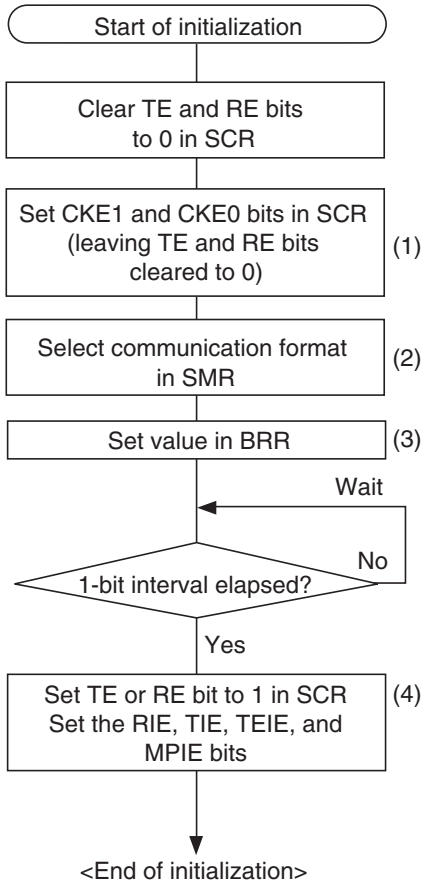

(1) Set the clock source in SCR. Clear the RIE, TIE, TEIE, MPIE, TE, and RE bits to 0. If clock output is selected in asynchronous mode, clock output starts immediately after the setting is made in SCR.

(2) Select the communication format in SMR.

(3) Write the value corresponding to the bit rate in BRR.
This step is not necessary when an external clock is used.

(4) Wait for at least the interval required to transmit or receive one bit, then set the TE or RE bit to 1 in SCR*. Set the RIE, TIE, TEIE, and MPIE bits as necessary. Setting the TE or RE bit enables the SCI to use the TxD or RxD pin.

Note: * In simultaneous transmitting and receiving, the TE and RE bits should be cleared to 0 or set to 1 simultaneously.

Figure 12.4 Sample Flowchart for SCI Initialization

- Transmitting Serial Data (Asynchronous Mode): Figure 12.5 shows a sample flowchart for transmitting serial data and indicates the procedure to follow.

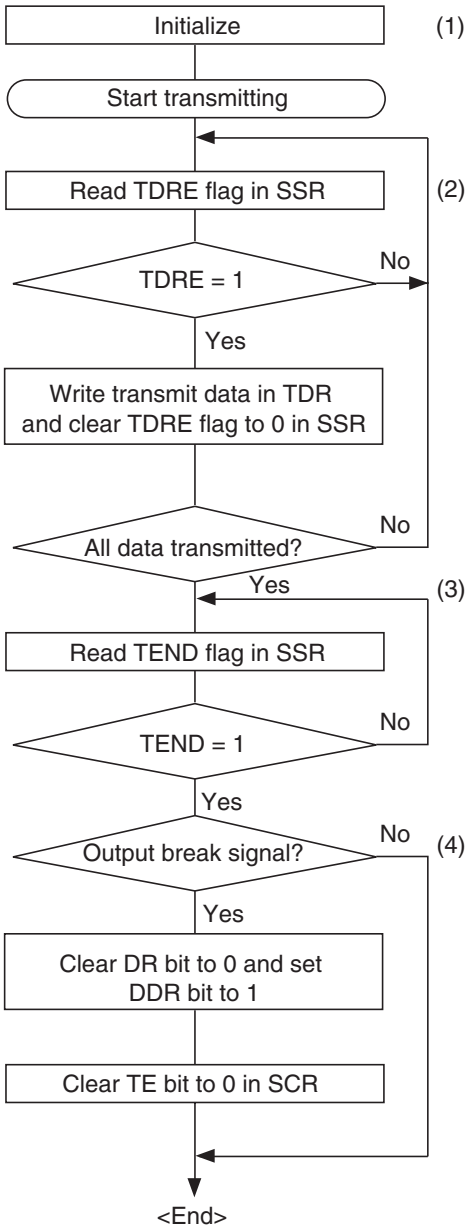

(1) SCI initialization:
the transmit data output function of the TxD pin is selected automatically. After the TE bit is set to 1, one frame of 1s is output, then transmission is possible.

(2) SCI status check and transmit data write:
read SSR and check that the TDRE flag is set to 1, then write transmit data in TDR and clear the TDRE flag to 0.

(3) To continue transmitting serial data:
after checking that the TDRE flag is 1, indicating that data can be written, write data in TDR, then clear the TDRE flag to 0.

(4) To output a break signal at the end of serial transmission:
set the DDR bit to 1 and clear the DR bit to 0, then clear the TE bit to 0 in SCR.

Figure 12.5 Sample Flowchart for Transmitting Serial Data

In transmitting serial data, the SCI operates as follows:

- The SCI monitors the TDRE flag in SSR. When the TDRE flag is cleared to 0, the SCI recognizes that TDR contains new data, and loads this data from TDR into TSR.
- After loading the data from TDR to TSR, the SCI sets the TDRE flag to 1 and starts transmitting. If the TIE bit is set to 1 in SCR, the SCI requests a transmit-data-empty interrupt (TXI) at this time.

  Serial transmit data is transmitted in the following order from the TxD pin:

  — Start bit: One 0 bit is output.

  — Transmit data: 7 or 8 bits are output, LSB first.

  — Parity bit or multiprocessor bit: One parity bit (even or odd parity), or one multiprocessor bit is output. Formats in which neither a parity bit nor a multiprocessor bit is output can also be selected.

  — Stop bit(s): One or two 1 bits (stop bits) are output.

  — Mark state: Output of 1 bits continues until the start bit of the next transmit data.
- The SCI checks the TDRE flag when it outputs the stop bit. If the TDRE flag is 0, the SCI loads new data from TDR into TSR, outputs the stop bit, then begins serial transmission of the next frame. If the TDRE flag is 1, the SCI sets the TEND flag to 1 in SSR, outputs the stop bit, then continues output of 1 bits in the mark state. If the TEIE bit is set to 1 in SCR, a transmit-end interrupt (TEI) is requested at this time

  Figure 12.6 shows an example of SCI transmit operation in asynchronous mode.

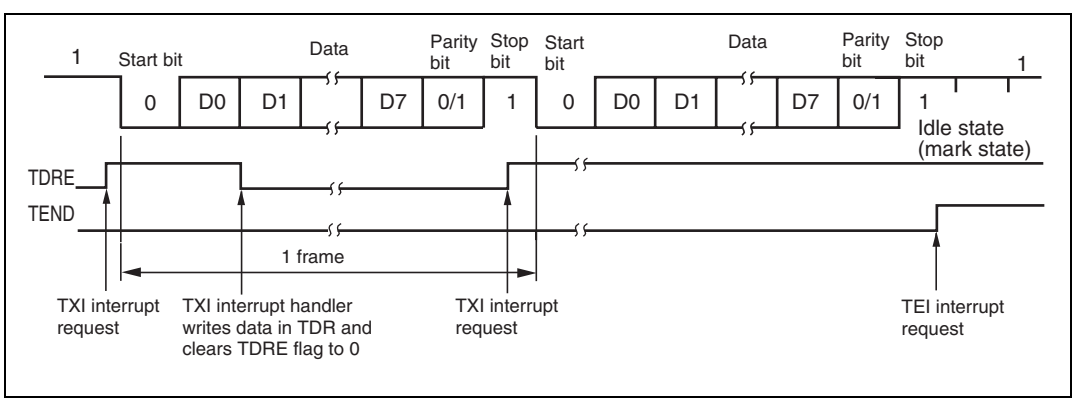

Figure 12.6 Example of SCI Transmit Operation in Asynchronous Mode (8-Bit Data with Parity and One Stop Bit)

- Receiving Serial Data (Asynchronous Mode): Figure 12.7 shows a sample flowchart for receiving serial data and indicates the procedure to follow.

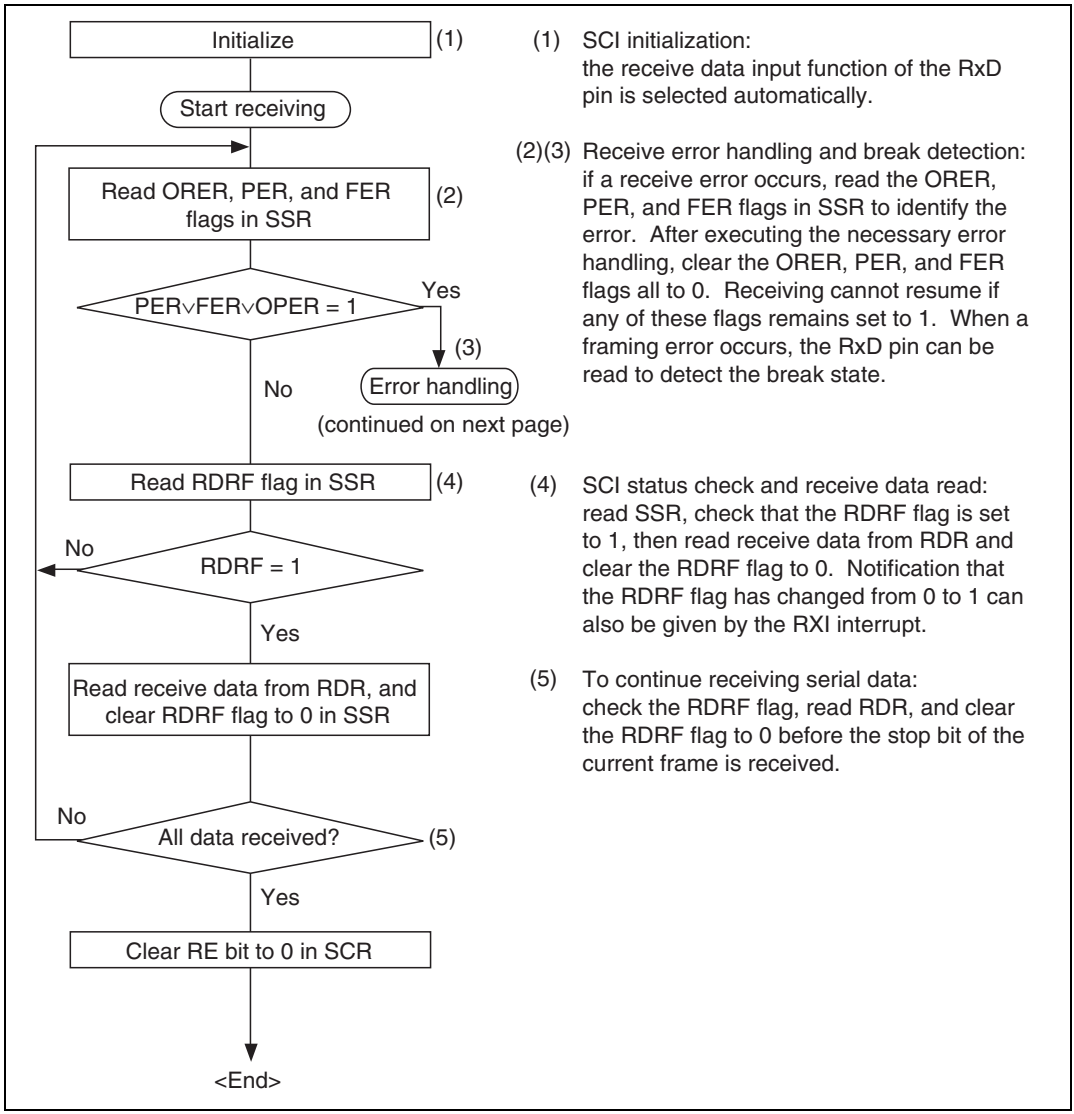

Figure 12.7 Sample Flowchart for Receiving Serial Data (1)

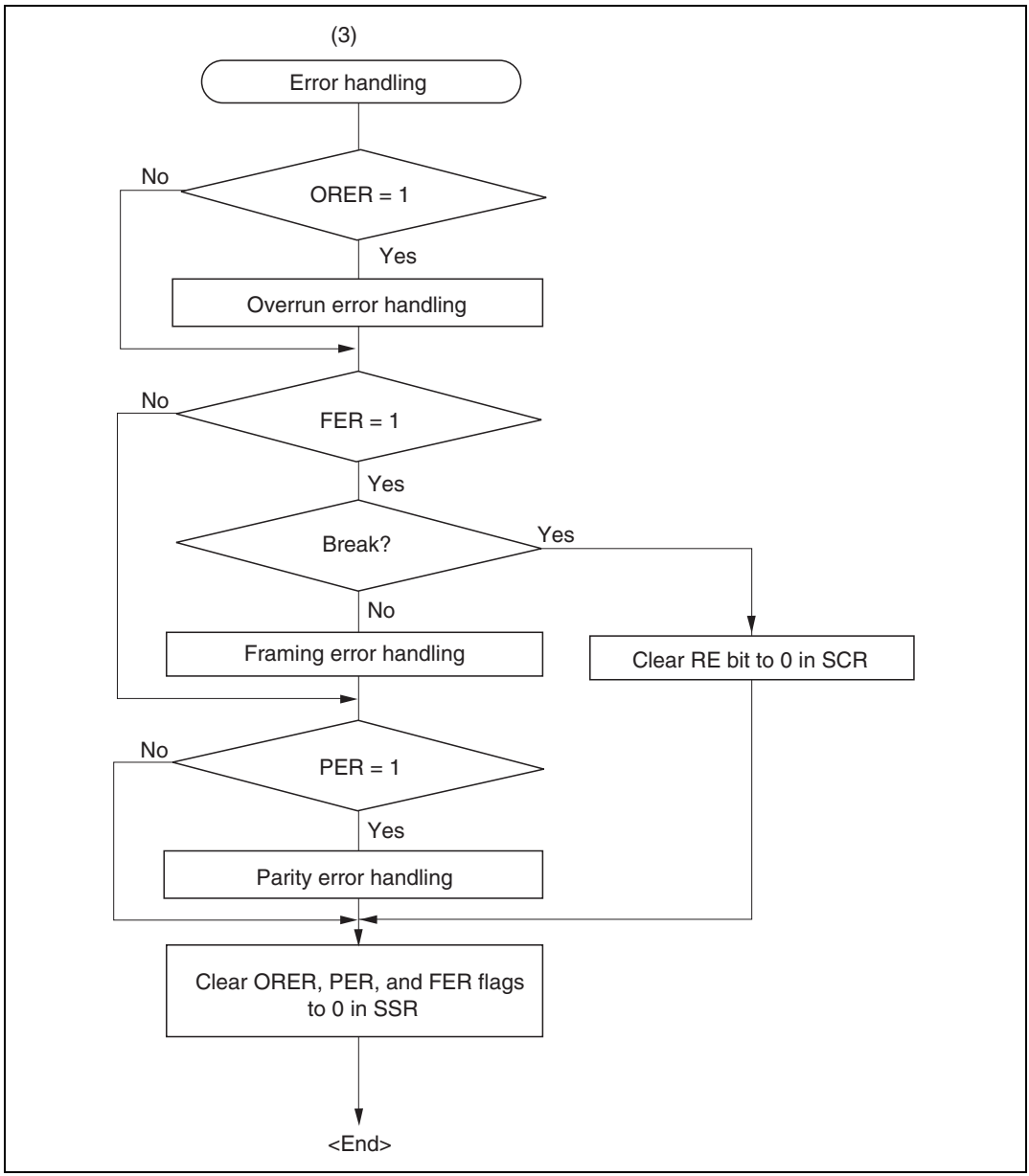

Figure 12.7 Sample Flowchart for Receiving Serial Data (2)

In receiving, the SCI operates as follows:

- The SCI monitors the communication line. When it detects a start bit (0 bit), the SCI synchronizes internally and starts receiving.
- Receive data is stored in RSR in order from LSB to MSB.
- The parity bit and stop bit are received.

  After receiving these bits, the SCI carries out the following checks:

  — Parity check: The number of 1s in the receive data must match the even or odd parity setting of in the O/$\overline{E}$ bit in SMR.

  — Stop bit check: The stop bit value must be 1. If there are two stop bits, only the first is checked.

  — Status check: The RDRF flag must be 0, indicating that the receive data can be transferred from RSR into RDR.

  If these all checks pass, the RDRF flag is set to 1 and the received data is stored in RDR. If one of the checks fails (receive error*), the SCI operates as shown in table 12.11.

  Note: * When a receive error occurs, further receiving is disabled. In receiving, the RDRF flag is not set to 1. Be sure to clear the error flags to 0.

- When the RDRF flag is set to 1, if the RIE bit is set to 1 in SCR, a receive-data-full interrupt (RXI) is requested. If the ORER, PER, or FER flag is set to 1 and the RIE bit in SCR is also set to 1, a receive-error interrupt (ERI) is requested.

Table 12.11 Receive Error Conditions

Receive Error	Abbreviation	Condition	Data Transfer
Overrun error	ORER	Receiving of next data ends while RDRF flag is still set to 1 in SSR	Receive data is not transferred from RSR to RDR
Framing error	FER	Stop bit is 0	Receive data is transferred from RSR to RDR
Parity error	PER	Parity of received data differs from even/odd parity setting in SMR	Receive data is transferred from RSR to RDR

Figure 12.8 shows an example of SCI receive operation in asynchronous mode.

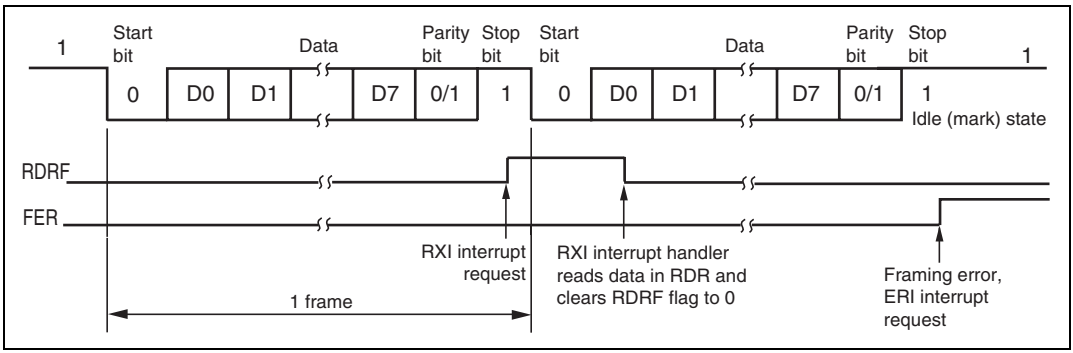

Figure 12.8 Example of SCI Receive Operation (8-Bit Data with Parity and One Stop Bit)

12.3.3 Multiprocessor Communication

The multiprocessor communication function enables several processors to share a single serial communication line. The processors communicate in asynchronous mode using a format with an additional multiprocessor bit (multiprocessor format).

In multiprocessor communication, each receiving processor is addressed by an ID. A serial communication cycle consists of an ID-sending cycle that identifies the receiving processor, and a data-sending cycle. The multiprocessor bit distinguishes ID-sending cycles from data-sending cycles.

The transmitting processor starts by sending the ID of the receiving processor with which it wants to communicate as data with the multiprocessor bit set to 1. Next the transmitting processor sends transmit data with the multiprocessor bit cleared to 0.

Receiving processors skip incoming data until they receive data with the multiprocessor bit set to 1. When they receive data with the multiprocessor bit set to 1, receiving processors compare the data with their IDs. Processors with IDs not matching the received data skip further incoming data until they again receive data with the multiprocessor bit set to 1. Multiple processors can send and receive data in this way.

Figure 12.9 shows an example of communication among different processors using a multiprocessor format.

Communication Formats: Four formats are available. Parity bit settings are ignored when a multiprocessor format is selected. For details see table 12.10.

Clock: See the description of asynchronous mode.

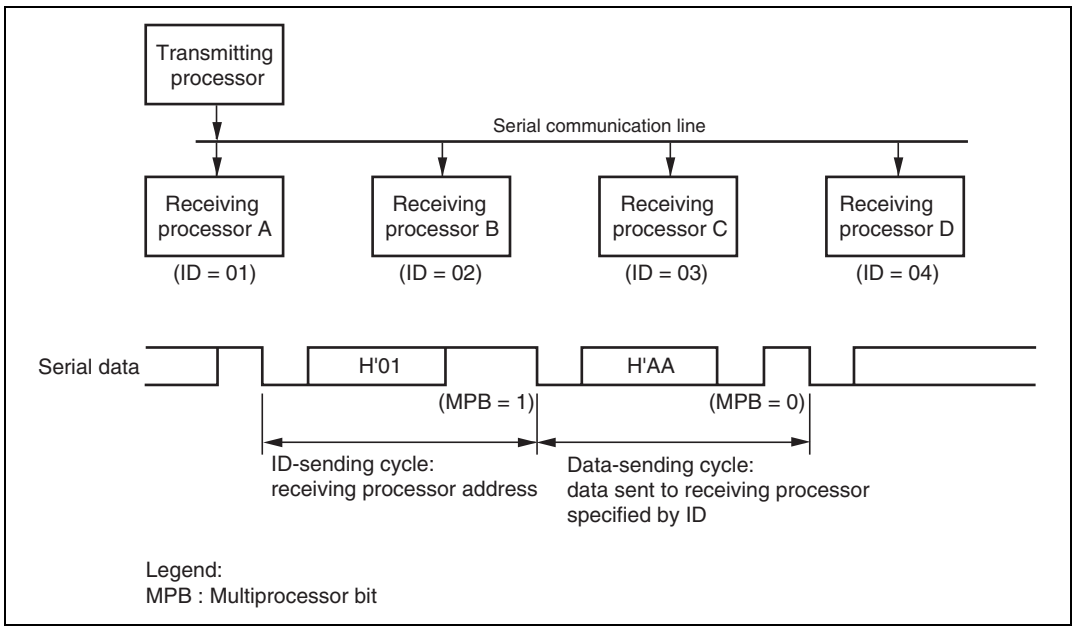

Figure 12.9 Example of Communication among Processors using Multiprocessor Format (Sending Data H'AA to Receiving Processor A)

Transmitting and Receiving Data:

- Transmitting Multiprocessor Serial Data: Figure 12.10 shows a sample flowchart for transmitting multiprocessor serial data and indicates the procedure to follow.

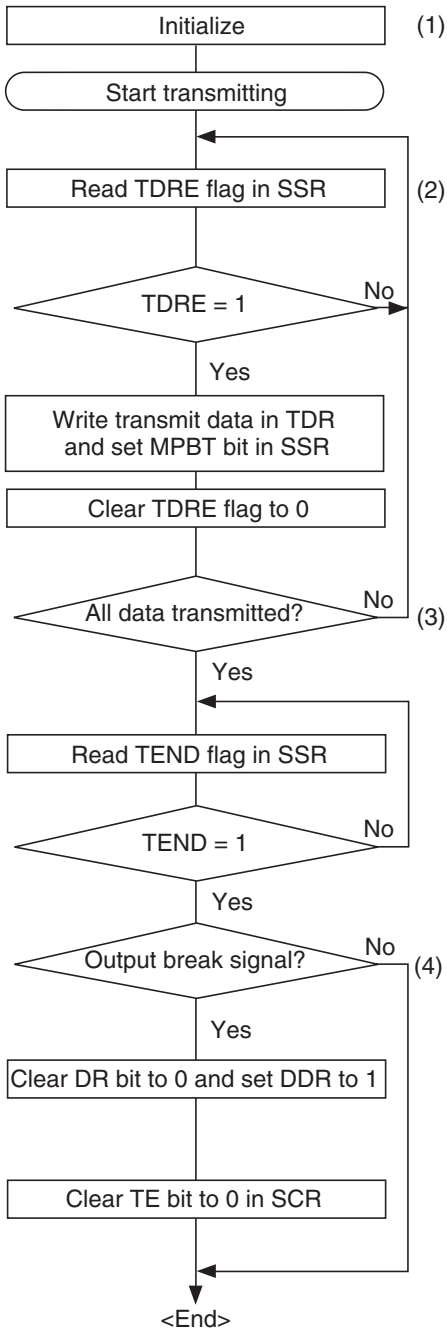

(1) SCI initialization:
the transmit data output function of the TxD pin is selected automatically.

(2) SCI status check and transmit data write:
read SSR, check that the TDRE flag is 1, then write transmit data in TDR. Also set the MPBT flag to 0 or 1 in SSR. Finally, clear the TDRE flag to 0.

(3) To continue transmitting serial data:
after checking that the TDRE flag is 1, indicating that data can be written, write data in TDR, then clear the TDRE flag to 0.

(4) To output a break signal at the end of serial transmission:
set the DDR bit to 1 and clear the DR bit to 0, then clear the TE bit to 0 in SCR.

Figure 12.10 Sample Flowchart for Transmitting Multiprocessor Serial Data

In transmitting serial data, the SCI operates as follows:

- The SCI monitors the TDRE flag in SSR. When the TDRE flag is cleared to 0, the SCI recognizes that TDR contains new data, and loads this data from TDR into TSR.
- After loading the data from TDR to TSR, the SCI sets the TDRE flag to 1 and starts transmitting. If the TIE bit is set to 1 in SCR, the SCI requests a transmit-data-empty interrupt (TXI) at this time.

  Serial transmit data is transmitted in the following order from the TxD pin:

  — Start bit: One 0 bit is output.

  — Transmit data: 7 or 8 bits are output, LSB first.

  — Multiprocessor bit: One multiprocessor bit (MPBT value) is output.

  — Stop bit(s): One or two 1 bits (stop bits) are output.

  — Mark state: Output of 1 bits continues until the start bit of the next transmit data.
- The SCI checks the TDRE flag when it outputs the stop bit. If the TDRE flag is 0, the SCI loads new data from TDR into TSR, outputs the stop bit, then begins serial transmission of the next frame. If the TDRE flag is 1, the SCI sets the TEND flag to 1 in SSR, outputs the stop bit, then continues output of 1 bits in the mark state. If the TEIE bit is set to 1 in SCR, a transmit-end interrupt (TEI) is requested at this time

Figure 12.11 shows an example of SCI transmit operation using a multiprocessor format.

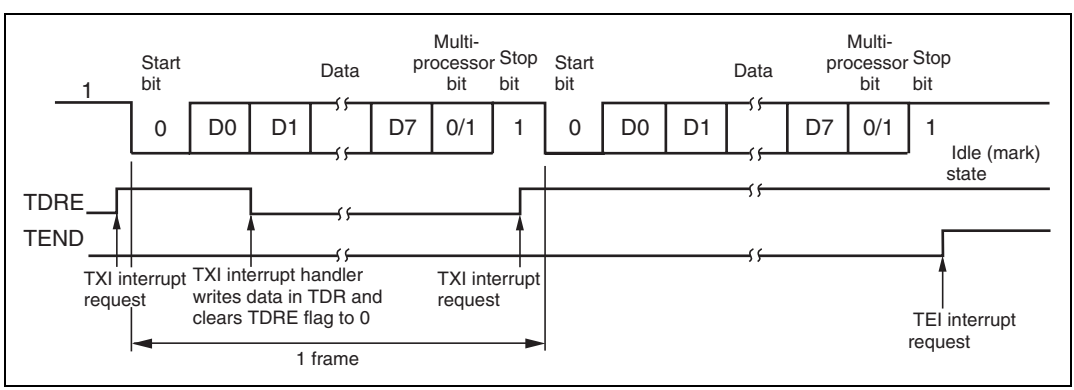

Figure 12.11 Example of SCI Transmit Operation (8-Bit Data with Multiprocessor Bit and One Stop Bit)

- Receiving Multiprocessor Serial Data: Figure 12.12 shows a sample flowchart for receiving multiprocessor serial data and indicates the procedure to follow.

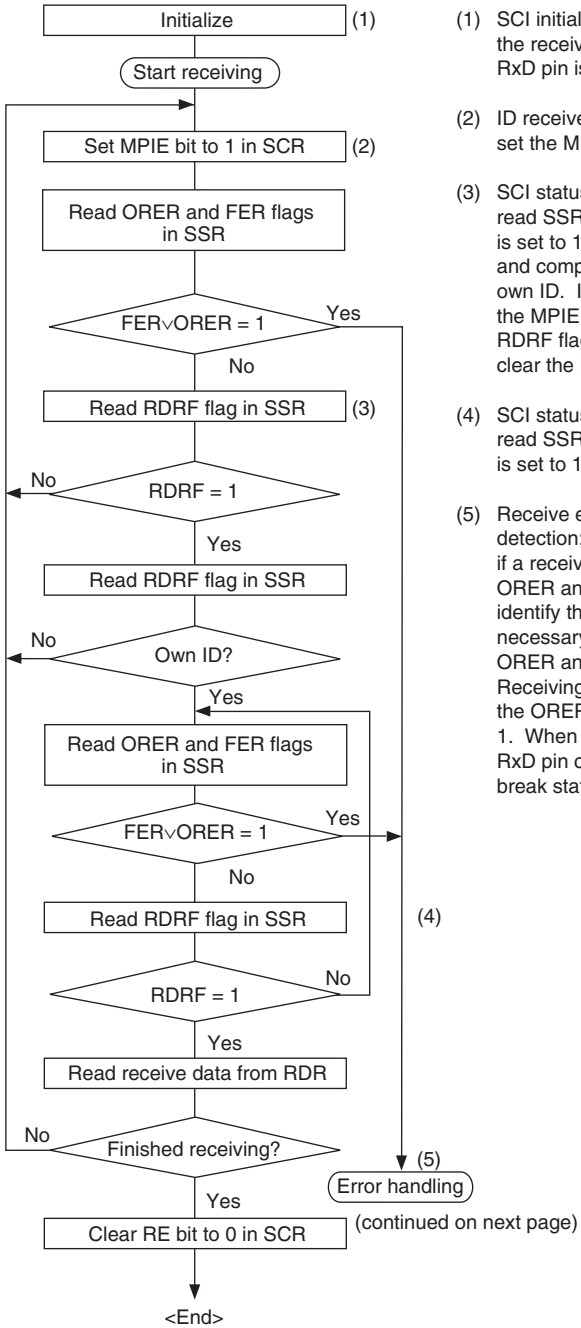

(1) SCI initialization:
the receive data input function of the RxD pin is selected automatically.

(2) ID receive cycle:
set the MPIE bit to 1 in SCR.

(3) SCI status check and ID check:
read SSR, check that the RDRF flag is set to 1, then read data from RDR and compare it with the processor's own ID. If the ID does not match, set the MPIE bit to 1 again and clear the RDRF flag to 0. If the ID matches, clear the RDRF flag to 0.

(4) SCI status check and data receiving:
read SSR, check that the RDRF flag is set to 1, then read data from RDR.

(5) Receive error handling and break detection:
if a receive error occurs, read the ORER and FER flags in SSR to identify the error. After executing the necessary error handling, clear the ORER and FER flags both to 0. Receiving cannot resume while either the ORER or FER flag remains set to 1. When a framing error occurs, the RxD pin can be read to detect the break state.

Figure 12.12 Sample Flowchart for Receiving Multiprocessor Serial Data (1)

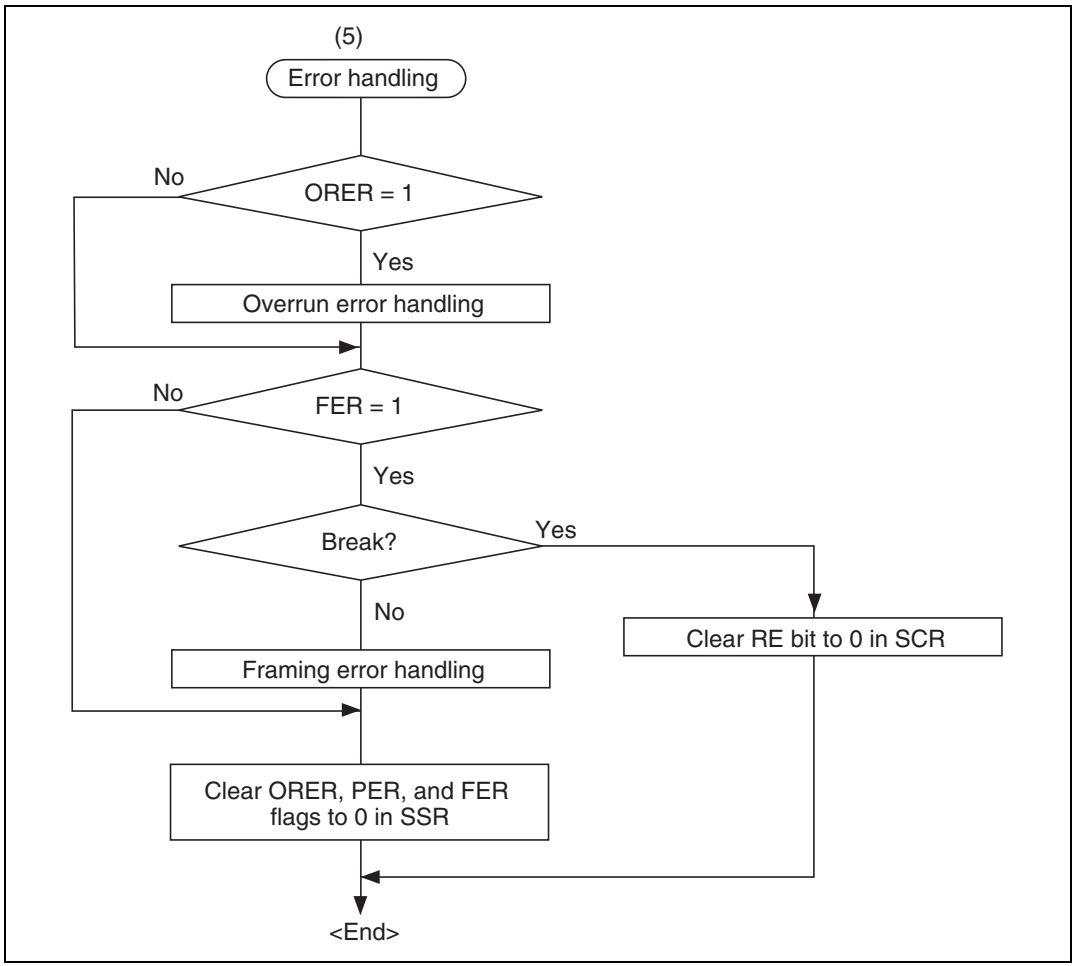

Figure 12.12 Sample Flowchart for Receiving Multiprocessor Serial Data (2)

Figure 12.13 shows an example of SCI receive operation using a multiprocessor format.

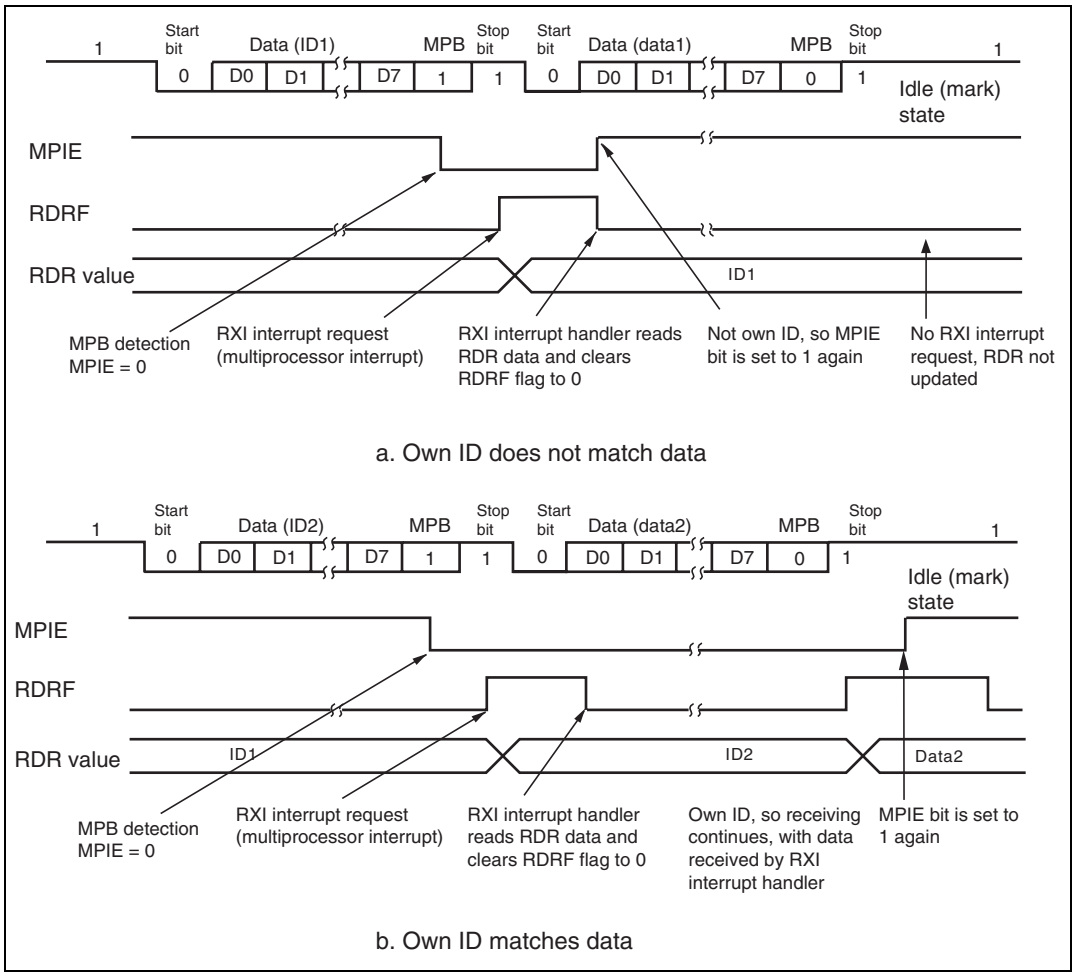

Figure 12.13 Example of SCI Receive Operation (8-Bit Data with Multiprocessor Bit and One Stop Bit)

12.3.4 Synchronous Operation

In synchronous mode, the SCI transmits and receives data in synchronization with clock pulses. This mode is suitable for high-speed serial communication.

The SCI transmitter and receiver share the same clock but are otherwise independent, so full-duplex communication is possible. The transmitter and the receiver are also double-buffered, so continuous transmitting or receiving is possible by reading or writing data while transmitting or receiving is in progress.

Figure 12.14 shows the general format in synchronous serial communication.

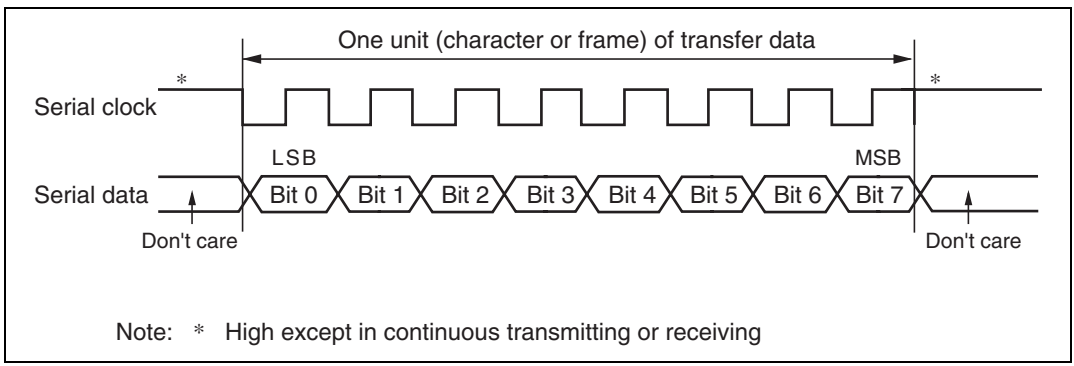

Figure 12.14 Data Format in Synchronous Communication

In synchronous serial communication, each data bit is placed on the communication line from one falling edge of the serial clock to the next. Data is guaranteed valid at the rise of the serial clock. In each character, the serial data bits are transferred in order from LSB (first) to MSB (last). After output of the MSB, the communication line remains in the state of the MSB. In synchronous mode the SCI receives data by synchronizing with the rise of the serial clock.

Communication Format: The data length is fixed at 8 bits. No parity bit or multiprocessor bit can be added.

Clock: An internal clock generated by the on-chip baud rate generator or an external clock input from the SCK pin can be selected by means of the C/$\overline{A}$ bit in SMR and the CKE1 and CKE0 bits in SCR. See table 12.6 for details of SCI clock source selection.

When the SCI operates on an internal clock, it outputs the clock source at the SCK pin. Eight clock pulses are output per transmitted or received character. When the SCI is not transmitting or receiving, the clock signal remains in the high state. If receiving in single-character units is required, an external clock should be selected.

Transmitting and Receiving Data:

- SCI Initialization (Synchronous Mode): Before transmitting or receiving data, clear the TE and RE bits to 0 in SCR, then initialize the SCI as follows.

  When changing the communication mode or format, always clear the TE and RE bits to 0 before following the procedure given below. Clearing TE to 0 sets the TDRE flag to 1 and initializes TSR. Clearing RE to 0, however, does not initialize the RDRF, PER, FER, and ORER flags, or RDR, which retain their previous contents.

Figure 12.15 shows a sample flowchart for initializing the SCI.

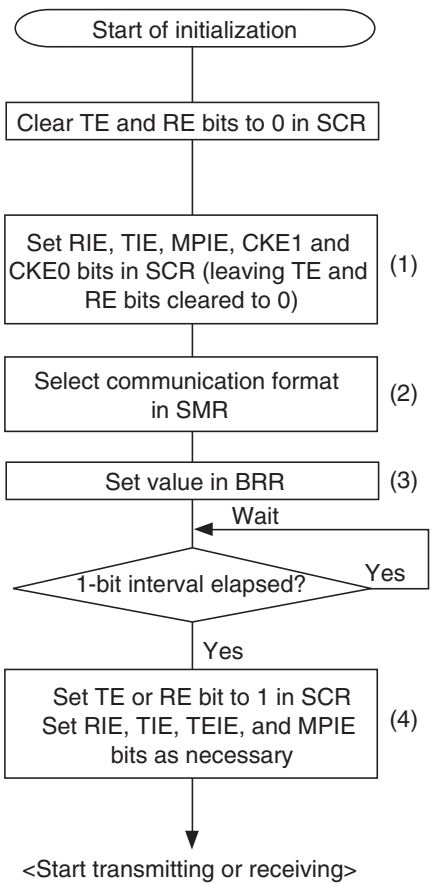

(1) Set the clock source in SCR. Clear the RIE, TIE, TEIE, MPIE, TE, and RE bits to 0.*

(2) Set the communication format in SMR.

(3) Write the value corresponding to the bit rate in BRR.
This step is not necessary when an external clock is used.

(4) Wait for at least the interval required to transmit or receive one bit, then set the TE or RE bit to 1 in SCR.* Set the RIE, TIE, TEIE, and MPIE bits as necessary.
Setting the TE or RE bit enables the SCI to use the TxD or RxD pin.

Note: * In simultaneous transmitting and receiving, the TE and RE bits should be cleared to 0 or set to 1 simultaneously.

Figure 12.15 Sample Flowchart for SCI Initialization

- Transmitting Serial Data (Synchronous Mode): Figure 12.16 shows a sample flowchart for transmitting serial data and indicates the procedure to follow.

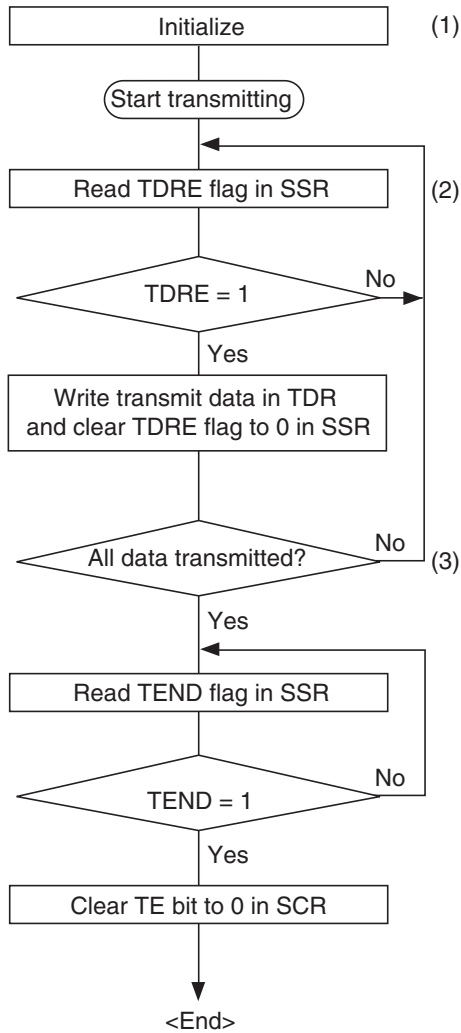

(1) SCI initialization: the transmit data output function of the TxD pin is selected automatically.

(2) SCI status check and transmit data write: read SSR, check that the TDRE flag is 1, then write transmit data in TDR and clear the TDRE flag to 0.

(3) To continue transmitting serial data: after checking that the TDRE flag is 1, indicating that data can be written, write data in TDR, then clear the TDRE flag to 0.

Figure 12.16 Sample Flowchart for Serial Transmitting

In transmitting serial data, the SCI operates as follows.

- The SCI monitors the TDRE flag in SSR. When the TDRE flag is cleared to 0, the SCI recognizes that TDR contains new data, and loads this data from TDR into TSR.
- After loading the data from TDR to TSR, the SCI sets the TDRE flag to 1 and starts transmitting. If the TIE bit is set to 1 in SCR, the SCI requests a transmit-data-empty interrupt (TXI) at this time.

  If clock output is selected, the SCI outputs eight serial clock pulses. If an external clock source is selected, the SCI outputs data in synchronization with the input clock. Data is output from the TxD pin in order from LSB (bit 0) to MSB (bit 7).
- The SCI checks the TDRE flag when it outputs the MSB (bit 7). If the TDRE flag is 0, the SCI loads data from TDR into TSR and begins serial transmission of the next frame. If the TDRE flag is 1, the SCI sets the TEND flag to 1 in SSR, and after transmitting the MSB, holds the TxD pin in the MSB state. If the TEIE bit is set to 1 in SCR, a transmit-end interrupt (TEI) is requested at this time
- After the end of serial transmission, the SCK pin is held in a constant state.

Figure 12.17 shows an example of SCI transmit operation.

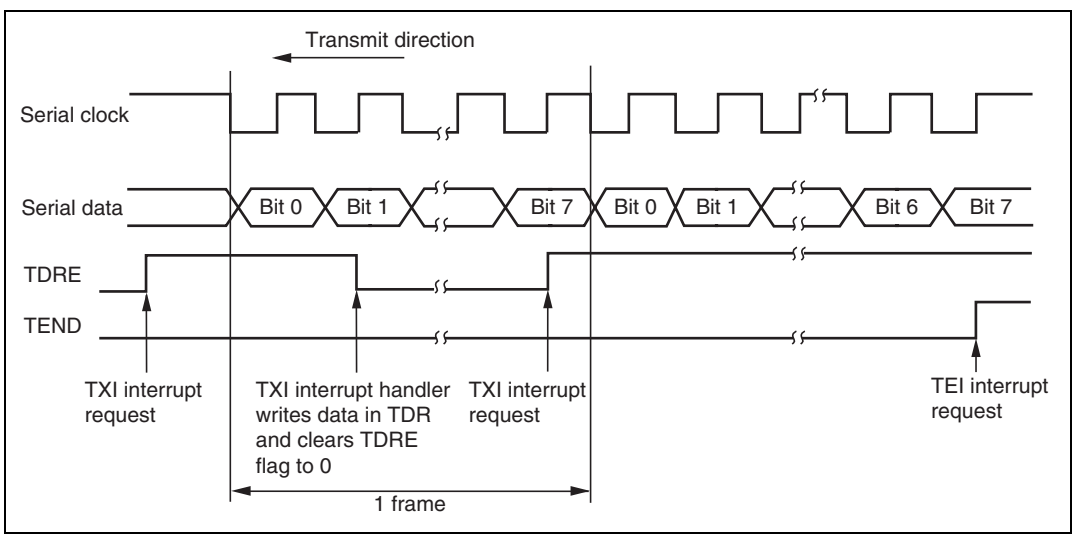

Figure 12.17 Example of SCI Transmit Operation

- Receiving Serial Data (Synchronous Mode): Figure 12.18 shows a sample flowchart for receiving serial data and indicates the procedure to follow. When switching from asynchronous to synchronous mode, make sure that the ORER, PER, and FER flags are cleared to 0. If the FER or PER flag is set to 1 the RDRF flag will not be set and both transmitting and receiving will be disabled.

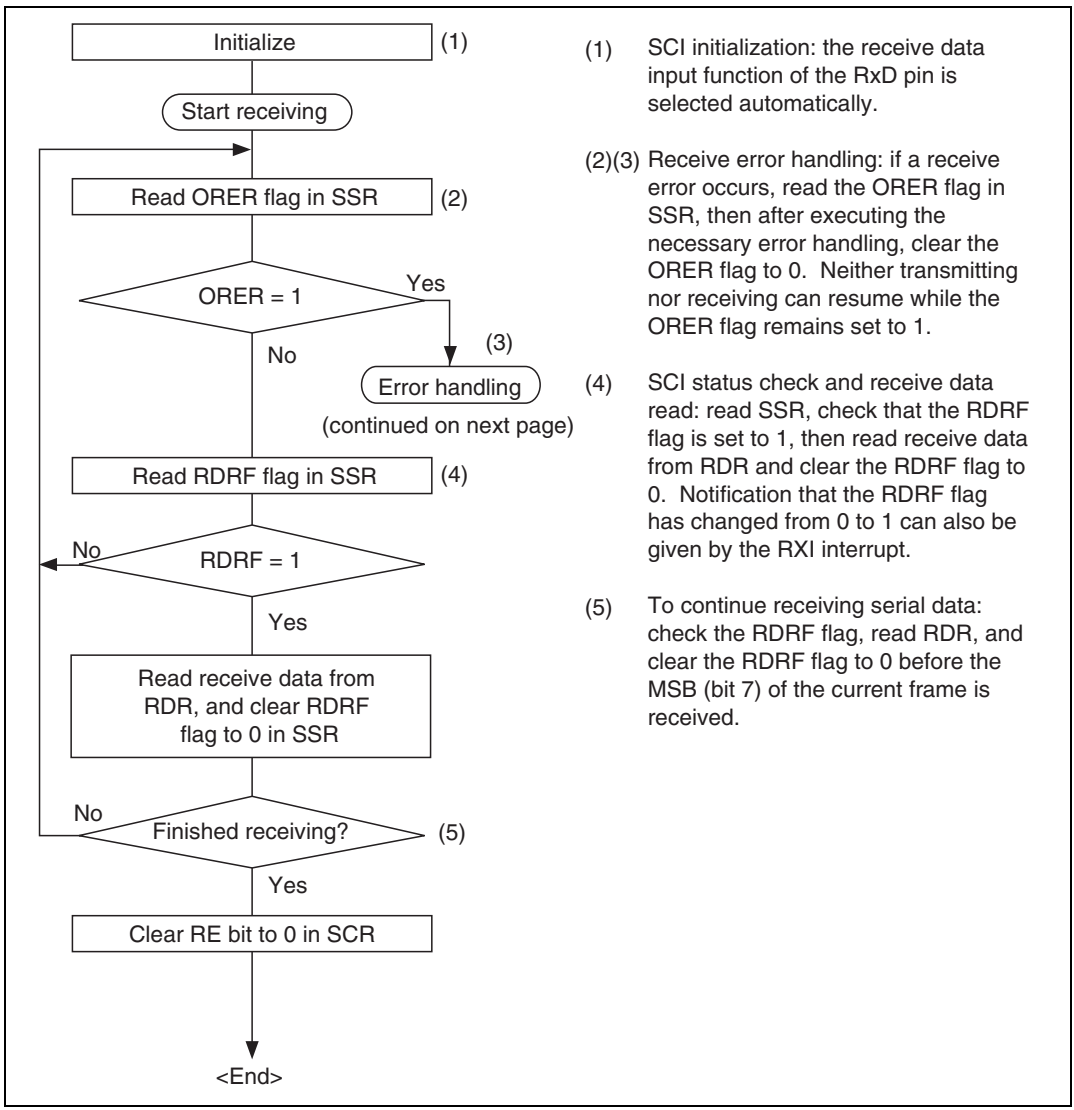

Figure 12.18 Sample Flowchart for Serial Receiving (1)

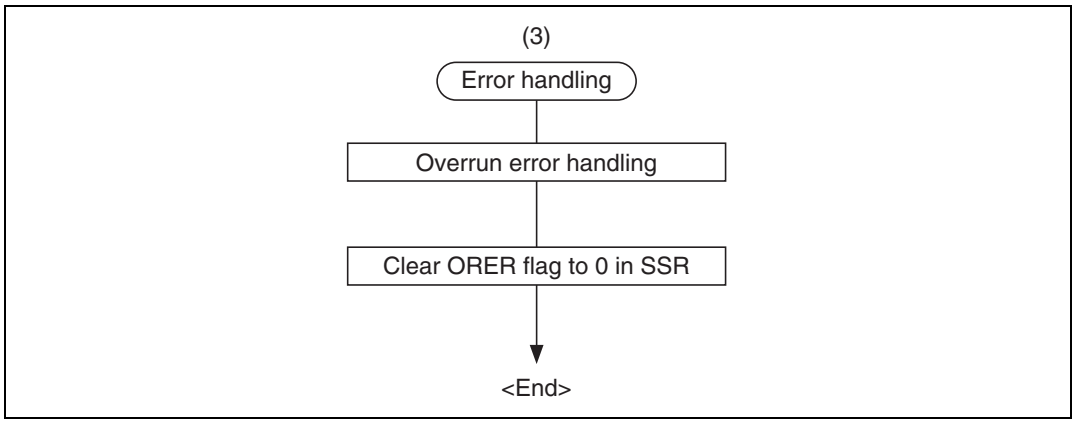

Figure 12.18 Sample Flowchart for Serial Receiving (2)

In receiving, the SCI operates as follows:

- The SCI synchronizes with serial clock input or output and synchronizes internally.
- Receive data is stored in RSR in order from LSB to MSB.

  After receiving the data, the SCI checks that the RDRF flag is 0, so that receive data can be transferred from RSR to RDR. If this check passes, the RDRF flag is set to 1 and the received data is stored in RDR. If the checks fails (receive error), the SCI operates as shown in table 12.11.

  When a receive error has been identified in the error check, subsequent transmit and receive operations are disabled.
- When the RDRF flag is set to 1, if the RIE bit is set to 1 in SCR, a receive-data-full interrupt (RXI) is requested. If the ORER flag is set to 1 and the RIE bit in SCR is also set to 1, a receive-error interrupt (ERI) is requested.

Figure 12.19 shows an example of SCI receive operation.

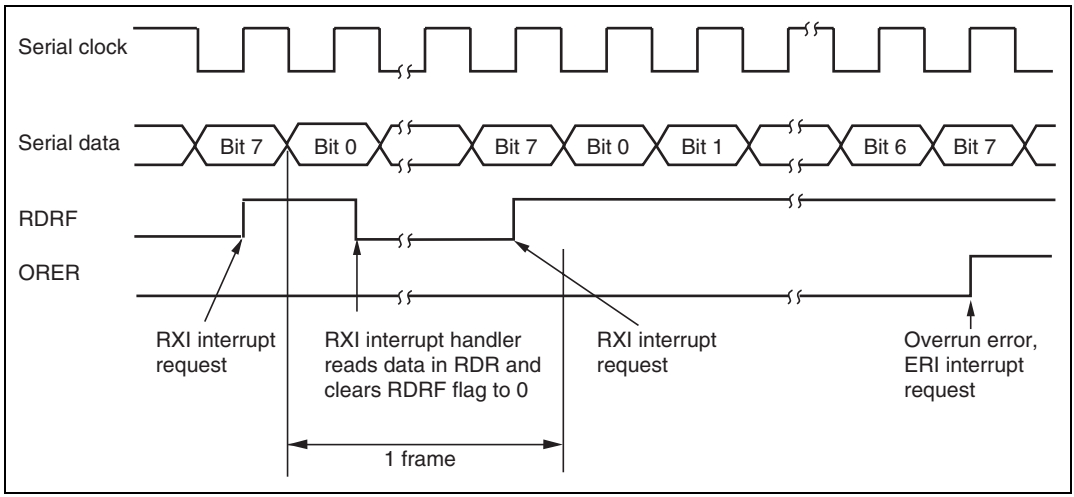

Figure 12.19 Example of SCI Receive Operation

- Transmitting and Receiving Data Simultaneously (Synchronous Mode): Figure 12.20 shows a sample flowchart for transmitting and receiving serial data simultaneously and indicates the procedure to follow.

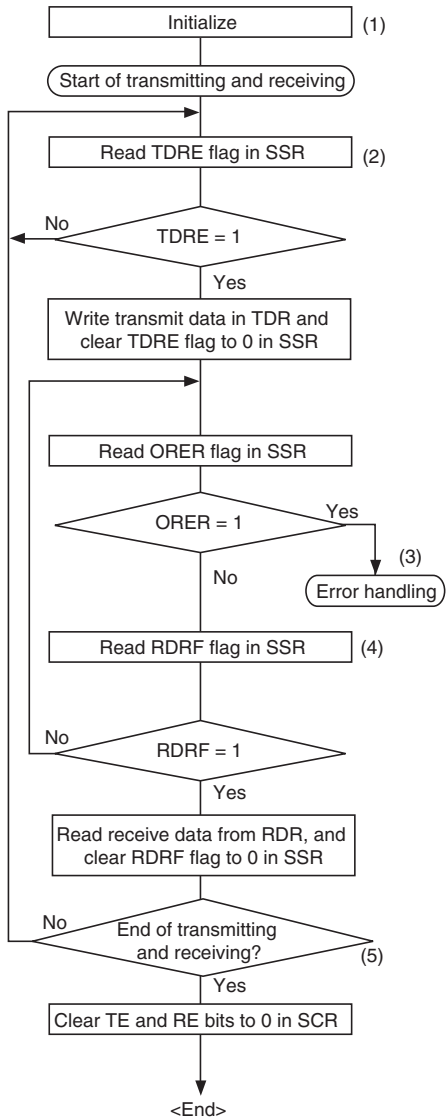

(1) SCI initialization: the transmit data output function of the TxD pin and the read data input function of the TxD pin are selected, enabling simultaneous transmitting and receiving.

(2) SCI status check and transmit data write: read SSR, check that the TDRE flag is 1, then write transmit data in TDR and clear the TDRE flag to 0. Notification that the TDRE flag has changed from 0 to 1 can also be given by the TXI interrupt.

(3) Receive error handling: if a receive error occurs, read the ORER flag in SSR, then after executing the necessary error handling, clear the ORER flag to 0. Neither transmitting nor receiving can resume while the ORER flag remains set to 1.

(4) SCI status check and receive data read: read SSR, check that the RDRF flag is 1, then read receive data from RDR and clear the RDRF flag to 0. Notification that the RDRF flag has changed from 0 to 1 can also be given by the RXI interrupt.

(5) To continue transmitting and receiving serial data: check the RDRF flag, read RDR, and clear the RDRF flag to 0 before the MSB (bit 7) of the current frame is received. Also check that the TDRE flag is set to 1, indicating that data can be written, write data in TDR, then clear the TDRE flag to 0 before the MSB (bit 7) of the current frame is transmitted.

Note: When switching from transmitting or receiving to simultaneous transmitting and receiving, clear both the TE bit and the RE bit to 0, then set both bits to 1 simultaneously.

Figure 12.20 Sample Flowchart for Simultaneous Serial Transmitting and Receiving

12.4 SCI Interrupts

The SCI has four interrupt request sources: transmit-end interrupt (TEI), receive-error (ERI), receive-data-full (RXI), and transmit-data-empty interrupt (TXI). Table 12.12 lists the interrupt sources and indicates their priority. These interrupts can be enabled or disabled by the TIE, RIE, and TEIE bits in SCR. Each interrupt request is sent separately to the interrupt controller.

A TXI interrupt is requested when the TDRE flag is set to 1 in SSR. A TEI interrupt is requested when the TEND flag is set to 1 in SSR.

An RXI interrupt is requested when the RDRF flag is set to 1 in SSR. An ERI interrupt is requested when the ORER, PER, or FER flag is set to 1 in SSR.

Table 12.12 SCI Interrupt Sources

Interrupt Source	Description	Priority
ERI	Receive error (ORER, FER, or PER)	High
RXI	Receive data register full (RDRF)	↑
TXI	Transmit data register empty (TDRE)	
TEI	Transmit end (TEND)	Low

12.5 Usage Notes

12.5.1 Notes on Use of SCI

Note the following points when using the SCI.

TDR Write and TDRE Flag: The TDRE flag in SSR is a status flag indicating the loading of transmit data from TDR to TSR. The SCI sets the TDRE flag to 1 when it transfers data from TDR to TSR.

Data can be written into TDR regardless of the state of the TDRE flag. If new data is written in TDR when the TDRE flag is 0, the old data stored in TDR will be lost because this data has not yet been transferred to TSR. Before writing transmit data in TDR, be sure to check that the TDRE flag is set to 1.

Simultaneous Multiple Receive Errors: Table 12.13 shows the state of the SSR status flags when multiple receive errors occur simultaneously. When an overrun error occurs the RSR contents are not transferred to RDR, so receive data is lost.

Table 12.13 SSR Status Flags and Transfer of Receive Data

SSR Status Flags				Receive Data Transfer	
RDRF	ORER	FER	PER	RSR → RDR	Receive Errors
1	1	0	0	×	Overrun error
0	0	1	0	○	Framing error
0	0	0	1	○	Parity error
1	1	1	0	×	Overrun error + framing error
1	1	0	1	×	Overrun error + parity error
0	0	1	1	○	Framing error + parity error
1	1	1	1	×	Overrun error + framing error + parity error

Legend:

○: Receive data is transferred from RSR to RDR.

× : Receive data is not transferred from RSR to RDR.

Break Detection and Processing: Break signals can be detected by reading the RxD pin directly when a framing error (FER) is detected. In the break state the input from the RxD pin consists of all 0s, so the FER flag is set and the parity error flag (PER) may also be set. In the break state the SCI receiver continues to operate, so if the FER flag is cleared to 0 it will be set to 1 again.

Sending a Break Signal: The input/output condition and level of the TxD pin are determined by DR and DDR bits. This feature can be used to send a break signal.

After the serial transmitter is initialized, the DR value substitutes for the mark state until the TE bit is set to 1 (the TxD pin function is not selected until the TE bit is set to 1). The DDR and DR bits should therefore be set to 1 beforehand.

To send a break signal during serial transmission, clear the DR bit to 0 , then clear the TE bit to 0. When the TE bit is cleared to 0 the transmitter is initialized, regardless of its current state, so the TxD pin becomes an input/output outputting the value 0.

Receive Error Flags and Transmitter Operation (Synchronous Mode Only): When a receive error flag (ORER, PER, or FER) is set to 1 the SCI will not start transmitting, even if the TDRE flag is cleared to 0. Be sure to clear the receive error flags to 0 when starting to transmit. Note that clearing the RE bit to 0 does not clear the receive error flags to 0.

Receive Data Sampling Timing in Asynchronous Mode and Receive Margin: In asynchronous mode the SCI operates on a base clock with 16 times the bit rate frequency. In receiving, the SCI synchronizes internally with the fall of the start bit, which it samples on the base clock. Receive data is latched at the rising edge of the eighth base clock pulse. See figure 12.21.

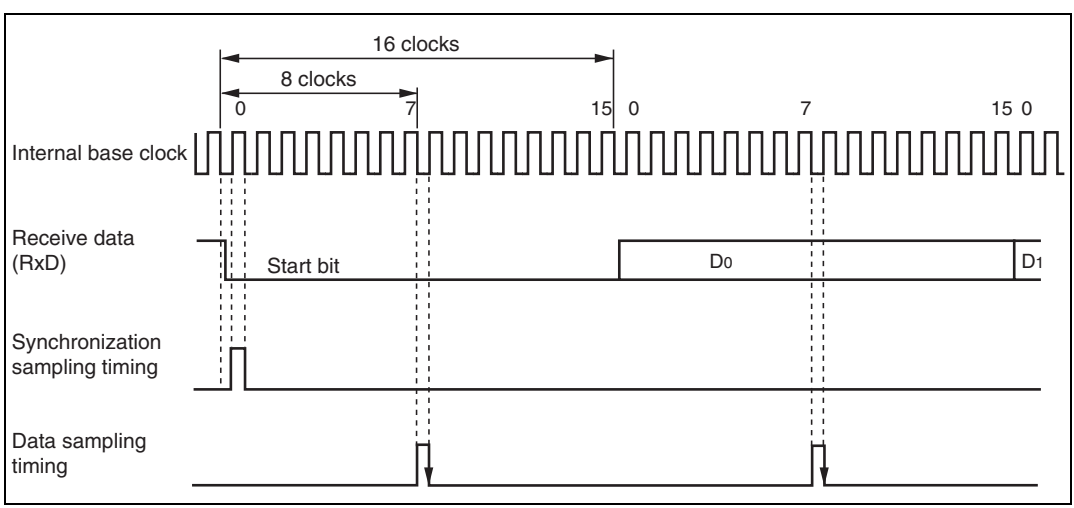

Figure 12.21 Receive Data Sampling Timing in Asynchronous Mode

The receive margin in asynchronous mode can therefore be expressed as shown in equation (1).

$$M = \left| (0.5 - \frac{1}{2N}) - (L - 0.5)\,F - \frac{|D - 0.5|}{N}\,(1 + F) \right| \times 100\% \quad \ldots\ldots\ldots \ (1)$$

Legend:
M: Receive margin (%)
N: Ratio of clock frequency to bit rate (N = 16)
D: Clock duty cycle (D = 0 to 1.0)
L: Frame length (L = 9 to 12)
F: Absolute deviation of clock frequency

From equation (1), if F = 0 and D = 0.5, the receive margin is 46.875%, as given by equation (2).

When D = 0.5 and F = 0:

$$M = (0.5 - \frac{1}{2 \times 16}) \times 100\%$$
$$= 46.875\% \quad \ldots\ldots\ldots \ (2)$$

This is a theoretical value. A reasonable margin to allow in system designs is 20% to 30%.

Restrictions on Use of an External Clock Source:

- When an external clock source is used for the serial clock, after updates TDR, allow an inversion of at least five system clock (ϕ) cycles before input of the serial clock to start transmitting. If the serial clock is input within four states of the TDR update, a malfunction may occur. (See figure 12.22)

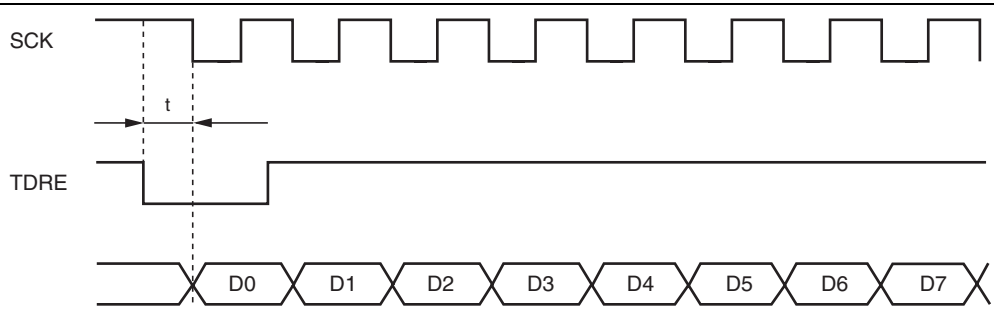

Note: In operation with an external clock source, be sure that t >4 states.

Figure 12.22 Example of Synchronous Transmission

Switching from SCK Pin Function to Port Pin Function:

- Problem in Operation: When switching the SCK pin function to the output port function (high-level output) by making the following settings while DDR = 1, DR = 1, C/$\overline{A}$ = 1, CKE1 = 0, CKE0 = 0, and TE = 1 (synchronous mode), low-level output occurs for one half-cycle.

1. End of serial data transmission
2. TE bit = 0
3. C/$\overline{A}$ bit = 0 ... switchover to port output
4. Occurrence of low-level output (see figure 12.23)

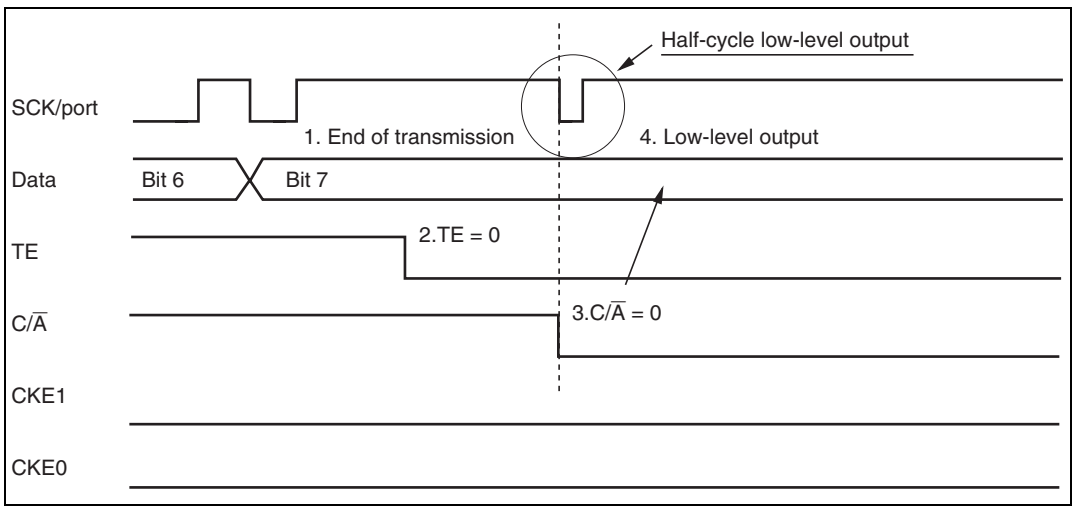

Figure 12.23 Operation when Switching from SCK Pin Function to Port Pin Function

- Sample Procedure for Avoiding Low-Level Output: As this sample procedure temporarily places the SCK pin in the input state, the SCK/port pin should be pulled up beforehand with an external circuit.

  With DDR = 1, DR = 1, C/$\overline{A}$ = 1, CKE1 = 0, CKE0 = 0, and TE = 1, make the following settings in the order shown.

1. End of serial data transmission
2. TE bit = 0
3. CKE1 bit = 1
4. C/$\overline{A}$ bit = 0 ... switchover to port output
5. CKE1 bit = 0

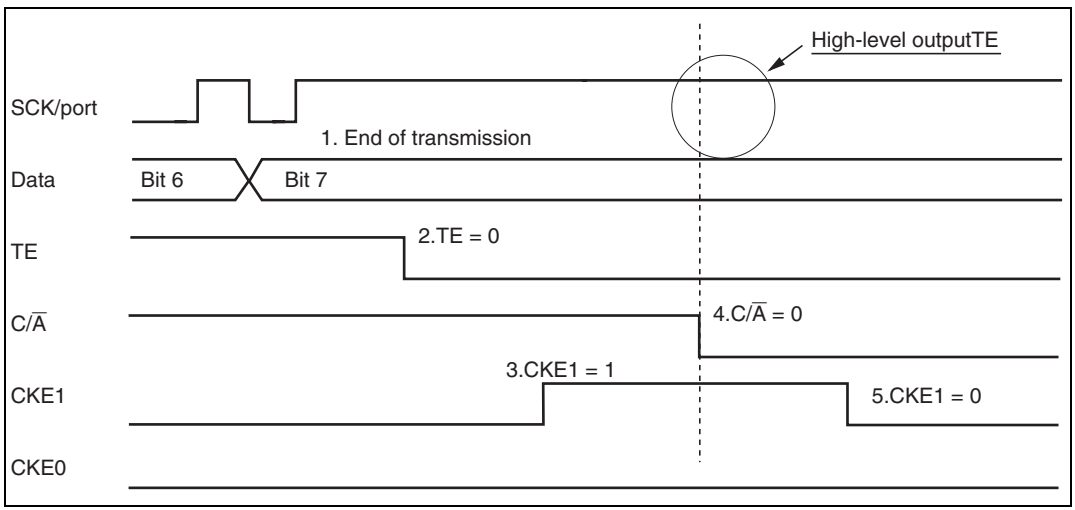

Figure 12.24 Operation when Switching from SCK Pin Function to Port Pin Function (Example of Preventing Low-Level Output)

Section 13 Smart Card Interface

13.1 Overview

The SCI supports an IC card (smart card) interface handling ISO/IEC7816-3 (Identification Card) character transmission as a serial communication interface expansion function.

Switchover between the normal serial communication interface and the smart card interface is controlled by a register setting.

13.1.1 Features

Features of the smart card interface supported by the H8/3008 are listed below.

- Asynchronous communication
  - Data length: 8 bits
  - Parity bit generation and checking
  - Transmission of error signal (parity error) in receive mode
  - Error signal detection and automatic data retransmission in transmit mode
  - Direct convention and inverse convention both supported
- Built-in baud rate generator allows any bit rate to be selected
- Three interrupt sources
  - There are three interrupt sources—transmit-data-empty, receive-data-full, and transmit/receive error—that can issue requests independently.

13.1.2 Block Diagram

Figure 13.1 shows a block diagram of the smart card interface.

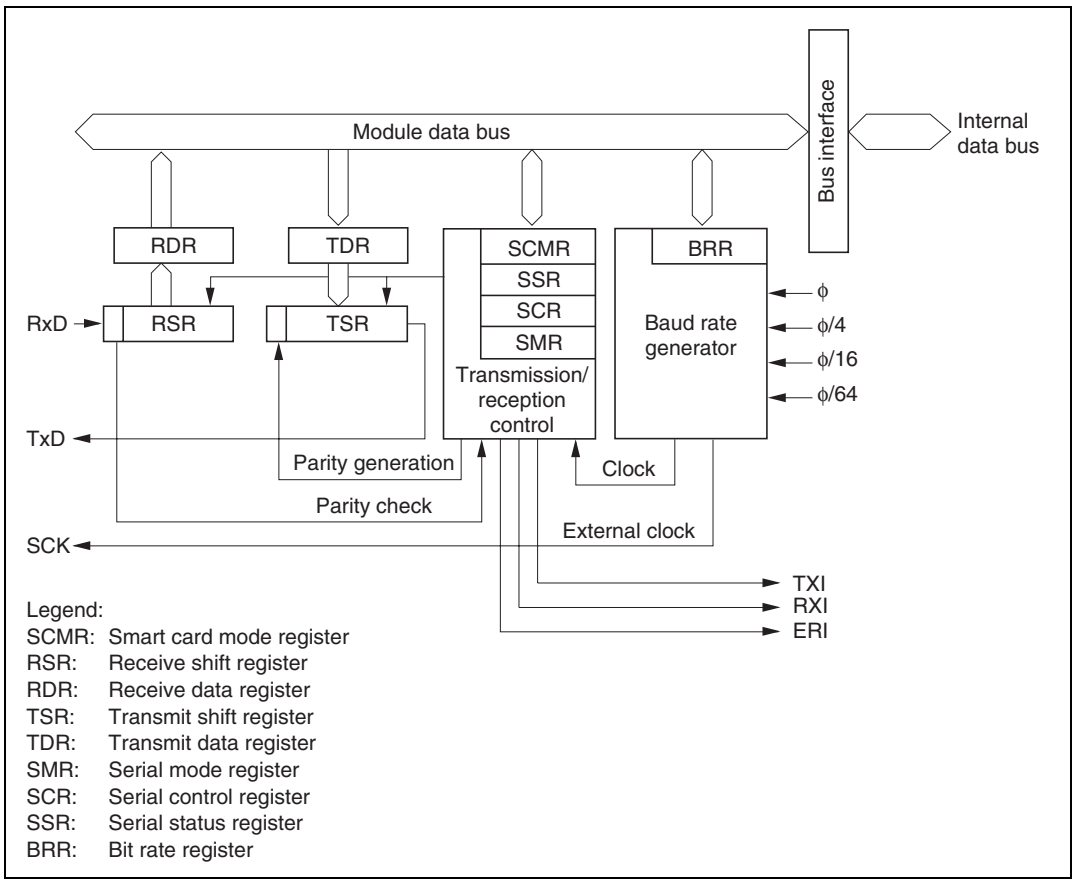

Figure 13.1 Block Diagram of Smart Card Interface

13.1.3 Pin Configuration

Table 13.1 shows the smart card interface pins.

Table 13.1 Smart Card Interface Pins

Pin Name	Abbreviation	I/O	Function
Serial clock pin	SCK	I/O	Clock input/output
Receive data pin	RxD	Input	Receive data input
Transmit data pin	TxD	Output	Transmit data output

13.1.4 Register Configuration

The smart card interface has the internal registers listed in table 13.2. The BRR, TDR, and RDR registers have their normal serial communication interface functions, as described in section 12, Serial Communication Interface.

Table 13.2 Smart Card Interface Registers

Channel	Address*[1]	Name	Abbreviation	R/W	Initial Value
0	H'FFFB0	Serial mode register	SMR	R/W	H'00
	H'FFFB1	Bit rate register	BRR	R/W	H'FF
	H'FFFB2	Serial control register	SCR	R/W	H'00
	H'FFFB3	Transmit data register	TDR	R/W	H'FF
	H'FFFB4	Serial status register	SSR	R/(W)*[2]	H'84
	H'FFFB5	Receive data register	RDR	R	H'00
	H'FFFB6	Smart card mode register	SCMR	R/W	H'F2
1	H'FFFB8	Serial mode register	SMR	R/W	H'00
	H'FFFB9	Bit rate register	BRR	R/W	H'FF
	H'FFFBA	Serial control register	SCR	R/W	H'00
	H'FFFBB	Transmit data register	TDR	R/W	H'FF
	H'FFFBC	Serial status register	SSR	R/(W)*[2]	H'84
	H'FFFBD	Receive data register	RDR	R	H'00
	H'FFFBE	Smart card mode register	SCMR	R/W	H'F2

Notes: 1. Lower 20 bits of the address in advanced mode.
2. Only 0 can be written in bits 7 to 3, to clear the flags.

13.2 Register Descriptions

This section describes the new or modified registers and bit functions in the smart card interface.

13.2.1 Smart Card Mode Register (SCMR)

SCMR is an 8-bit readable/writable register that selects smart card interface functions.

Bit	7	6	5	4	3	2	1	0
	—	—	—	—	SDIR	SINV	—	SMIF
Initial value	1	1	1	1	0	0	1	0
Read/Write	—	—	—	—	R/W	R/W	—	R/W

Reserved bits

Reserved bit

Smart card interface mode select
Enables or disables the smart card interface function

Smart card data invert
Inverts data logic levels

Smart card data transfer direction
Selects the serial/parallel conversion format

SCMR is initialized to H'F2 by a reset and in standby mode.

Bits 7 to 4—Reserved: Read-only bits, always read as 1.

Bit 3—Smart Card Data Transfer Direction (SDIR): Selects the serial/parallel conversion format.*1

Bit 3 SDIR	Description	
0	TDR contents are transmitted LSB-first Receive data is stored LSB-first in RDR	(Initial value)
1	TDR contents are transmitted MSB-first Receive data is stored MSB-first in RDR	

Bit 2—Smart Card Data Invert (SINV): Specifies inversion of the data logic level. This function is used in combination with the SDIR bit to communicate with inverse-convention cards.*2 The SINV bit does not affect the logic level of the parity bit. For parity settings, see section 13.3.4, Register Settings.

Bit 2 SINV	Description	
0	Unmodified TDR contents are transmitted Receive data is stored unmodified in RDR	(Initial value)
1	Inverted TDR contents are transmitted Receive data is inverted before storage in RDR	

Bit 1—Reserved: Read-only bit, always read as 1.

Bit 0—Smart Card Interface Mode Select (SMIF): Enables the smart card interface function.

Bit 0 SMIF	Description	
0	Smart card interface function is disabled	(Initial value)
1	Smart card interface function is enabled	

Notes: 1. The function for switching between LSB-first and MSB-first mode can also be used with the normal serial communication interface. Note that when the communication format data length is set to 7 bits and MSB-first mode is selected for the serial data to be transferred, bit 0 of TDR is not transmitted, and only bits 7 to 1 of the received data are valid.

2. The data logic level inversion function can also be used with the normal serial communication interface. Note that, when inverting the serial data to be transferred, parity transmission and parity checking is based on the number of high-level periods at the serial data I/O pin, and not on the register value.

13.2.2 Serial Status Register (SSR)

The function of SSR bit 4 is modified in smart card interface mode. This change also causes a modification to the setting conditions for bit 2 (TEND).

Bit	7	6	5	4	3	2	1	0
	TDRE	RDRF	ORER	ERS	PER	TEND	MPB	MPBT
Initial value	1	0	0	0	0	1	0	0
Read/Write	R/(W)*	R/(W)*	R/(W)*	R/(W)*	R/(W)*	R	R	R/W

Transmit end
Status flag indicating end of transmission

Error signal status (ERS)
Status flag indicating that an error signal has been received

Note: * Only 0 can be written, to clear the flag.

Bits 7 to 5: These bits operate as in normal serial communication. For details see section 12.2.7, Serial Status Register (SSR).

Bit 4—Error Signal Status (ERS): In smart card interface mode, this flag indicates the status of the error signal sent from the receiving device to the transmitting device. The smart card interface does not detection framing errors.

Bit 4 ERS	Description
0	Indicates normal transmission, with no error signal returned (Initial value) [Clearing conditions] • The chip is reset, or enters standby mode or module stop mode • Software reads ERS while it is set to 1, then writes 0.
1	Indicates that the receiving device sent an error signal reporting a parity error [Setting condition] A low error signal was sampled.

Note: Clearing the TE bit to 0 in SCR does not affect the ERS flag, which retains its previous value.

Bits 3 to 0: These bits operate as in normal serial communication. For details see section 12.2.7, Serial Status Register (SSR). The setting conditions for transmit end (TEND), however, are modified as follows.

Bit 2 TEND	Description
0	Transmission is in progress [Clearing condition] Software reads TDRE while it is set to 1, then writes 0 in the TDRE flag.
1	End of transmission [Setting conditions] (Initial value) • The chip is reset or enters standby mode. • The TE bit and FER/ERS bit are both cleared to 0 in SCR. • TDRE is 1 and FER/ERS is 0 at a time 2.5 etu after the last bit of a 1-byte serial character is transmitted (normal transmission).

Note: An etu (elementary time unit) is the time needed to transmit one bit.

13.2.3 Serial Mode Register (SMR)

The function of SMR bit 7 is modified in smart card interface mode. This change also causes a modification to the function of bits 1 and 0 in the serial control register (SCR).

Bit	7	6	5	4	3	2	1	0
	GM	CHR	PE	O/$\overline{E}$	STOP	MP	CKS1	CKS0
Initial value	0	0	0	0	0	0	0	0
Read/Write	R/W	R/W	R/W	R/W	R/W	R/W	R/W	R/W

Bit 7—GSM Mode (GM): With the normal smart card interface, this bit is cleared to 0. Setting this bit to 1 selects GSM mode, an additional mode for controlling the timing for setting the TEND flag that indicates completion of transmission, and the type of clock output used. The details of the additional clock output control mode are specified by the CKE1 and CKE0 bits in the serial control register (SCR).

Bit 7 GM	Description
0	Normal smart card interface mode operation • The TEND flag is set 12.5 etu after the beginning of the start bit. • Clock output on/off control only. (Initial value)
1	GSM mode smart card interface mode operation • The TEND flag is set 11.0 etu after the beginning of the start bit. • Clock output on/off and fixed-high/fixed-low control.

Bits 6 to 0: These bits operate as in normal serial communication. For details see section 12.2.5, Serial Mode Register (SMR).

13.2.4 Serial Control Register (SCR)

The function of SCR bits 1 and 0 is modified in smart card interface mode.

Bit	7	6	5	4	3	2	1	0
	TIE	RIE	TE	RE	MPIE	TEIE	CKE1	CKE0
Initial value	0	0	0	0	0	0	0	0
Read/Write	R/W	R/W	R/W	R/W	R/W	R/W	R/W	R/W

Bits 7 to 2: These bits operate as in normal serial communication. For details see section 12.2.6, Serial Control Register (SCR).

Bits 1 and 0—Clock Enable 1 and 0 (CKE1, CKE0): These bits select the SCI clock source and enable or disable clock output from the SCK pin. In smart card interface mode, it is possible to specify a fixed high level or fixed low level for the clock output, in addition to the usual switching between enabling and disabling of the clock output.

Bit 7 GM	Bit 1 CKE1	Bit 0 CKE0	Description
0	0	0	Internal clock/SCK pin is I/O port (Initial value)
		1	Internal clock/SCK pin is clock output
1		0	Internal clock/SCK pin is fixed at low output
		1	Internal clock/SCK pin is clock output
	1	0	Internal clock/SCK pin is fixed at high output
		1	Internal clock/SCK pin is clock output

13.3 Operation

13.3.1 Overview

The main features of the smart card interface are as follows.

- One frame consists of 8-bit data plus a parity bit.
- In transmission, a guard time of at least 2 etu (elementary time units: the time for transfer of one bit) is provided between the end of the parity bit and the start of the next frame.
- If a parity error is detected during reception, a low error signal level is output for 1 etu period 10.5 etu after the start bit.
- If an error signal is detected during transmission, the same data is transmitted automatically after the elapse of 2 etu or longer.
- Only asynchronous communication is supported; there is no synchronous communication function.

13.3.2 Pin Connections

Figure 13.2 shows a pin connection diagram for the smart card interface.

In communication with a smart card, since both transmission and reception are carried out on a single data transmission line, the TxD pin and RxD pin should both be connected to this line. The data transmission line should be pulled up to V_{CC} with a resistor.

When the smart card uses the clock generated on the smart card interface, the SCK pin output is input to the CLK pin of the smart card. If the smart card uses an internal clock, this connection is unnecessary.

The reset signal should be output from one of the H8/3008's generic ports.

In addition to these pin connections, power and ground connections will normally also be necessary.

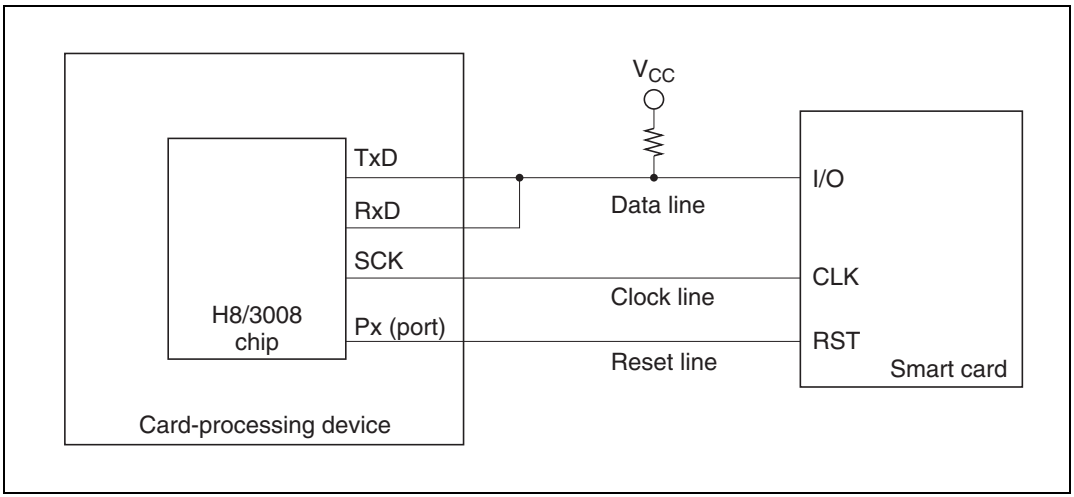

Figure 13.2 Smart Card Interface Connection Diagram

Note: Setting both TE and RE to 1 without connecting a smart card enables closed transmission/reception, allowing self-diagnosis to be carried out.

13.3.3 Data Format

Figure 13.3 shows the smart card interface data format. In reception in this mode, a parity check is carried out on each frame, and if an error is detected an error signal is sent back to the transmitting device to request retransmission of the data. In transmission, the error signal is sampled and the same data is retransmitted.

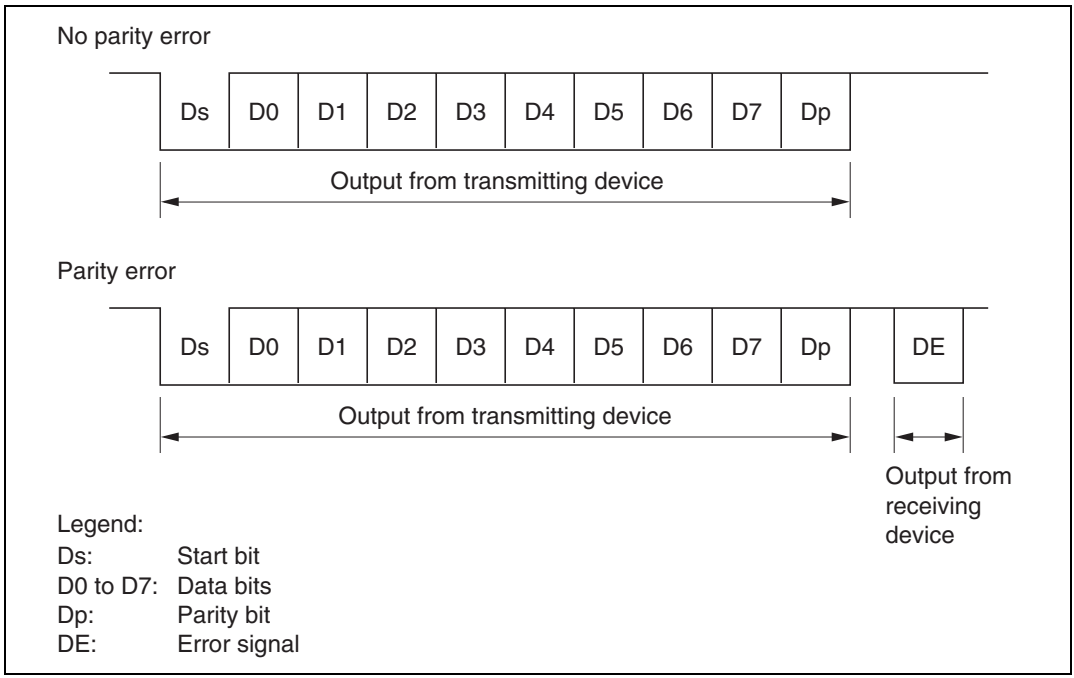

Figure 13.3 Smart Card Interface Data Format

The operating sequence is as follows.

1. When the data line is not in use it is in the high-impedance state, and is fixed high with a pull-up resistor.
2. The transmitting device starts transfer of one frame of data. The data frame starts with a start bit (Ds, low-level), followed by 8 data bits (D0 to D7) and a parity bit (Dp).
3. With the smart card interface, the data line then returns to the high-impedance state. The data line is pulled high with a pull-up resistor.
4. The receiving device carries out a parity check. If there is no parity error and the data is received normally, the receiving device waits for reception of the next data. If a parity error occurs, however, the receiving device outputs an error signal (DE, low-level) to request retransmission of the data. After outputting the error signal for the prescribed length of time, the receiving device places the signal line in the high-impedance state again. The signal line is pulled high again by a pull-up resistor.
5. If the transmitting device does not receive an error signal, it proceeds to transmit the next data frame. If it receives an error signal, however, it returns to step 2 and transmits the same data again.

13.3.4 Register Settings

Table 13.3 shows a bit map of the registers used in the smart card interface. Bits indicated as 0 or 1 must be set to the value shown. The setting of other bits is described in this section.

Table 13.3 Smart Card Interface Register Settings

		Bit							
Register	**Address*1**	**Bit 7**	**Bit 6**	**Bit 5**	**Bit 4**	**Bit 3**	**Bit 2**	**Bit 1**	**Bit 0**
SMR	H'FFFB0	GM	0	1	O/E	1	0	CKS1	CKS0
BRR	H'FFFB1	BRR7	BRR6	BRR5	BRR4	BRR3	BRR2	BRR1	BRR0
SCR	H'FFFB2	TIE	RIE	TE	RE	0	0	CKE1*2	CKE0
TDR	H'FFFB3	TDR7	TDR6	TDR5	TDR4	TDR3	TDR2	TDR1	TDR0
SSR	H'FFFB4	TDRE	RDRF	ORER	ERS	PER	TEND	0	0
RDR	H'FFFB5	RDR7	RDR6	RDR5	RDR4	RDR3	RDR2	RDR1	RDR0
SCMR	H'FFFB6	—	—	—	—	SDIR	SINV	—	SMIF

Legend:

—: Unused bit.

Notes: 1. Lower 20 bits of the address in advanced mode.

2. When GM is cleared to 0 in SMR, the CKE1 bit must also be cleared to 0.

Serial Mode Register (SMR) Settings: Clear the GM bit to 0 when using the normal smart card interface mode, or set to 1 when using GSM mode. Clear the O/$\overline{E}$ bit to 0 if the smart card is of the direct convention type, or set to 1 if of the inverse convention type.

Bits CKS1 and CKS0 select the clock source of the built-in baud rate generator. See section 13.3.5, Clock.

Bit Rate Register (BRR) Settings: BRR is used to set the bit rate. See section 13.3.5, Clock, for the method of calculating the value to be set.

Serial Control Register (SCR) Settings: The TIE, RIE, TE, and RE bits have their normal serial communication functions. See section 12, Serial Communication Interface, for details. The CKE1 and CKE0 bits specify clock output. To disable clock output, clear these bits to 00; to enable clock output, set these bits to 01. Clock output is performed when the GM bit is set to 1 in SMR. Clock output can also be fixed low or high.

Smart Card Mode Register (SCMR) Settings: Clear both the SDIR bit and SINV bit cleared to 0 if the smart card is of the direct convention type, and set both to 1 if of the inverse convention type. To use the smart card interface, set the SMIF bit to 1.

The register settings and examples of starting character waveforms are shown below for two smart cards, one following the direct convention and one the inverse convention.

1. Direct Convention (SDIR = SINV = O/$\overline{E}$ = 0)

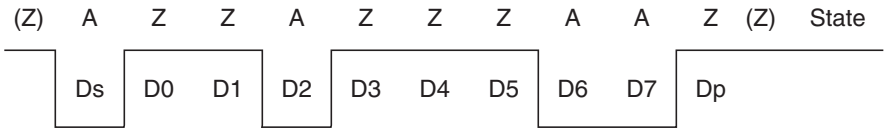

With the direct convention type, the logic 1 level corresponds to state Z and the logic 0 level to state A, and transfer is performed in LSB-first order. In the example above, the first character data is H'3B. The parity bit is 1, following the even parity rule designated for smart cards.

2. Inverse Convention (SDIR = SINV = O/$\overline{E}$ = 1)

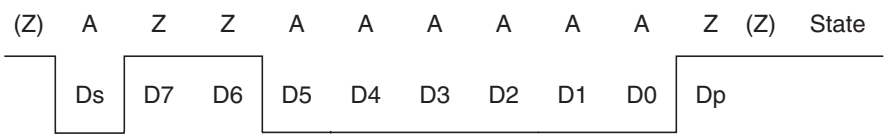

With the inverse convention type, the logic 1 level corresponds to state A and the logic 0 level to state Z, and transfer is performed in MSB-first order. In the example above, the first character data is H'3F. The parity bit is 0, corresponding to state Z, following the even parity rule designated for smart cards.

In the H8/3008, inversion specified by the SINV bit applies only to the data bits, D7 to D0. For parity bit inversion, the O/$\overline{E}$ bit in SMR must be set to odd parity mode. This applies to both transmission and reception.

13.3.5 Clock

Only an internal clock generated by the on-chip baud rate generator can be used as the transmit/receive clock for the smart card interface. The bit rate is set with the bit rate register (BRR) and the CKS1 and CKS0 bits in the serial mode register (SMR). The equation for calculating the bit rate is shown below. Table 13.5 shows some sample bit rates.

If clock output is selected with CKE0 set to 1, a clock with a frequency of 372 times the bit rate is output from the SCK pin.

$$B = \frac{\phi}{1488 \times 2^{2n-1} \times (N + 1)} \times 10^6$$

where, N: BRR setting ($0 \leq N \leq 255$)
B: Bit rate (bit/s)
ϕ: Operating frequency (MHz)
n: See table 13.4

Table 13.4 n-Values of CKS1 and CKS0 Settings

n	CKS1	CKS0
0	0	0
1		1
2	1	0
3		1

Note: If the gear function is used to divide the clock frequency, use the divided frequency to calculate the bit rate. The equation above applies directly to 1/1 frequency division.

Table 13.5 Bit Rates (bits/s) for Various BRR Settings (When n = 0)

	ϕ (MHz)								
N	7.1424	10.00	10.7136	13.00	14.2848	16.00	18.00	20.00	25.00
0	9600.0	13440.9	14400.0	17473.1	19200.0	21505.4	24193.5	26881.7	33602.2
1	4800.0	6720.4	7200.0	8736.6	9600.0	10752.7	12096.8	13440.9	16801.1
2	3200.0	4480.3	4800.0	5824.4	6400.0	7168.5	8064.5	8960.6	11200.7

Note: Bit rates are rounded off to two decimal places.

The following equation calculates the bit rate register (BRR) setting from the operating frequency and bit rate. N is an integer from 0 to 255, specifying the value with the smaller error.

$$N = \frac{\phi}{1488 \times 2^{2n-1} \times B} \times 10^6 - 1$$

Table 13.6 BRR Settings for Typical Bit Rates (bits/s) (When n = 0)

	φ (MHz)																	
	7.1424		10.00		10.7136		13.00		14.2848		16.00		18.00		20.00		25.00	
bit/s	N	Error	N	Error	N	Error	N	Error	N	Error	N	Error	N	Error	N	Error	N	Error
9600	0	0.00	1	30	1	25	1	8.99	1	0.00	1	12.01	2	15.99	2	6.66	3	12.49

Table 13.7 Maximum Bit Rates for Various Frequencies (Smart Card Interface Mode)

φ (MHz)	Maximum Bit Rate (bits/s)	N	n
7.1424	9600	0	0
10.00	13441	0	0
10.7136	14400	0	0
13.00	17473	0	0
14.2848	19200	0	0
16.00	21505	0	0
18.00	24194	0	0
20.00	26882	0	0
25.00	33602	0	0

The bit rate error is given by the following equation:

$$\text{Error (\%)} = \left(\frac{\phi}{1488 \times 2^{2n-1} \times B \times (N + 1)} \times 10^6 - 1 \right) \times 100$$

13.3.6 Transmitting and Receiving Data

Initialization: Before transmitting or receiving data, the smart card interface must be initialized as described below. Initialization is also necessary when switching from transmit mode to receive mode, or vice versa.

1. Clear the TE and RE bits to 0 in the serial control register (SCR).
2. Clear error flags ERS, PER, and ORER to 0 in the serial status register (SSR).
3. Set the parity bit (O/$\overline{E}$) and baud rate generator select bits (CKS1 and CKS0) in the serial mode register (SMR). Clear the C/$\overline{A}$, CHR, and MP bits to 0, and set the STOP and PE bits to 1.
4. Set the SMIF, SDIR, and SINV bits in the smart card mode register (SCMR).

   When the SMIF bit is set to 1, the TxD pin and RxD pin are both switched from port to SCI pin functions and go to the high-impedance state.
5. Set a value corresponding to the desired bit rate in the bit rate register (BRR).
6. Set the CKE0 bit in SCR. Clear the TIE, RIE, TE, RE, MPIE, TEIE, and CKE1 bits to 0. If the CKE0 bit is set to 1, the clock is output from the SCK pin.
7. Wait at least one bit interval, then set the TIE, RIE, TE, and RE bits in SCR. Do not set the TE bit and RE bit at the same time, except for self-diagnosis.

Transmitting Serial Data: As data transmission in smart card mode involves error signal sampling and retransmission processing, the processing procedure is different from that for the normal SCI. Figure 13.5 shows a sample transmission processing flowchart.

1. Perform smart card interface mode initialization as described in Initialization above.
2. Check that the ERS error flag is cleared to 0 in SSR.
3. Repeat steps 2 and 3 until it can be confirmed that the TEND flag is set to 1 in SSR.
4. Write the transmit data in TDR, clear the TDRE flag to 0, and perform the transmit operation. The TEND flag is cleared to 0.
5. To continue transmitting data, go back to step 2.
6. To end transmission, clear the TE bit to 0.

The above processing may include interrupt handling.

If transmission ends and the TEND flag is set to 1 while the TIE bit is set to 1 and interrupt requests are enabled, a transmit-data-empty interrupt (TXI) will be requested. If an error occurs in transmission and the ERS flag is set to 1 while the RIE bit is set to 1 and interrupt requests are enabled, a transmit/receive-error interrupt (ERI) will be requested.

The timing of TEND flag setting depends on the GM bit in SMR.

Figure 13.4 shows timing of TEND flag setting.

For details, see Interrupt Operations in this section.

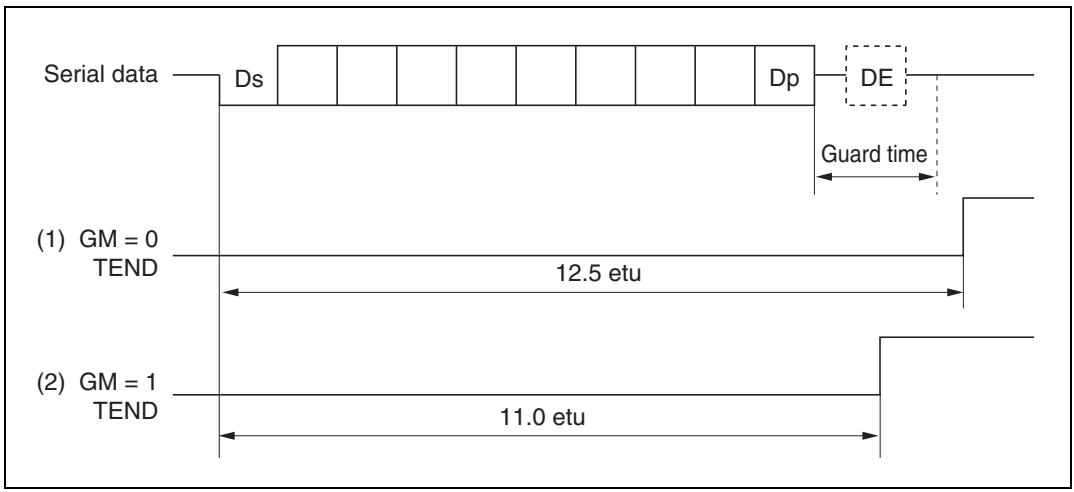

Figure 13.4 Timing of TEND Flag Setting

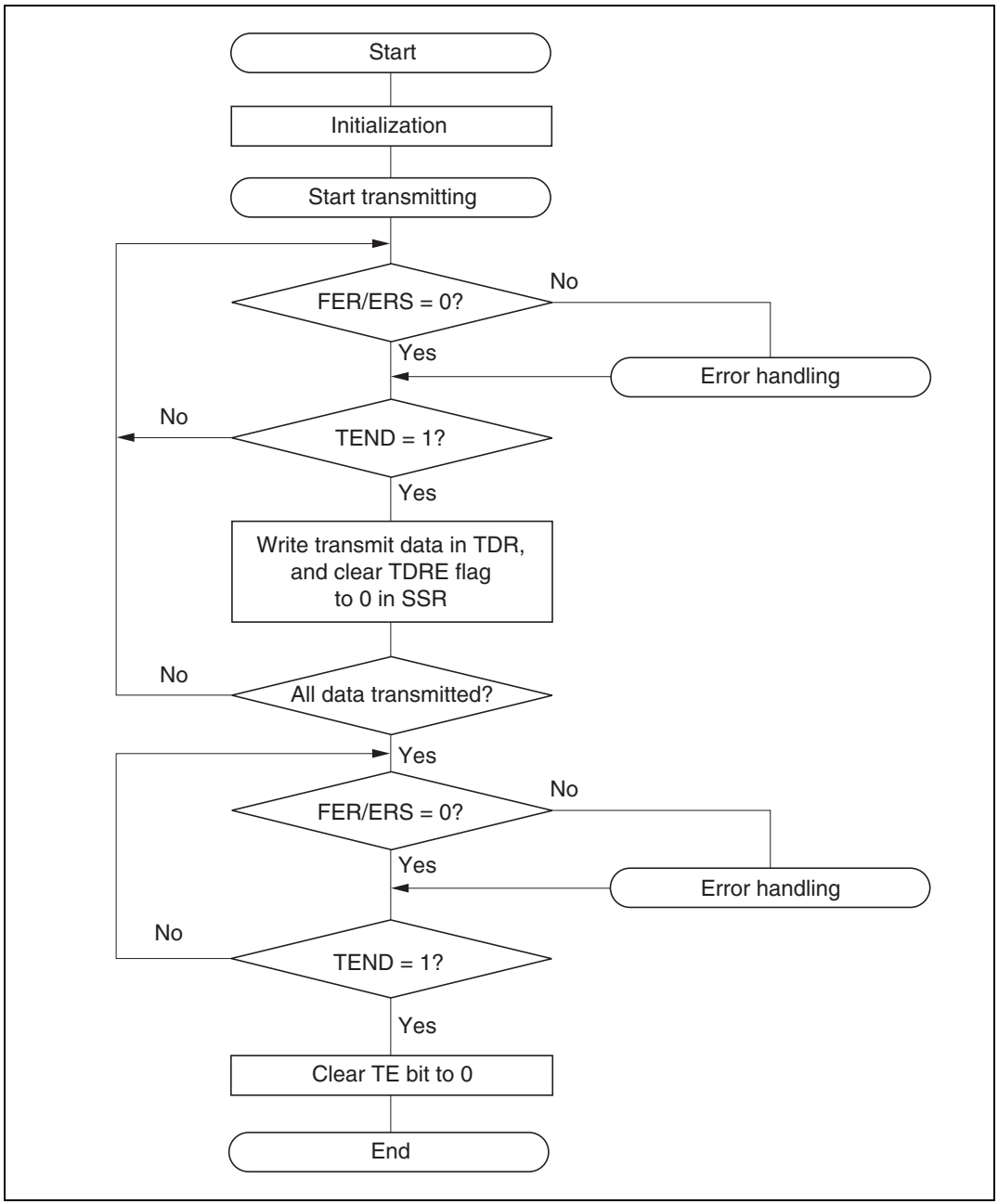

Figure 13.5 Sample Transmission Processing Flowchart

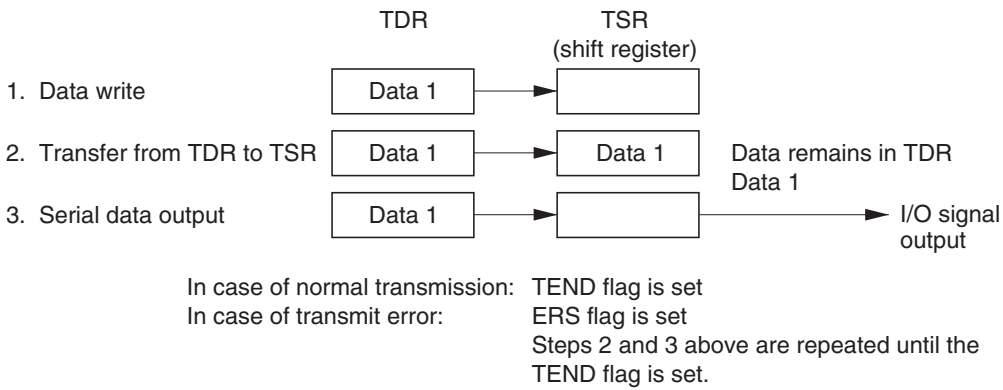

In case of normal transmission: TEND flag is set
In case of transmit error: ERS flag is set
Steps 2 and 3 above are repeated until the TEND flag is set.

Note: When the ERS flag is set, it should be cleared until transfer of the last bit (D7 in LSB-first transmission, D0 in MSB-first transmission) of the retransmit data to be transmitted next has been completed.

Figure 13.6 Relation Between Transmit Operation and Internal Registers

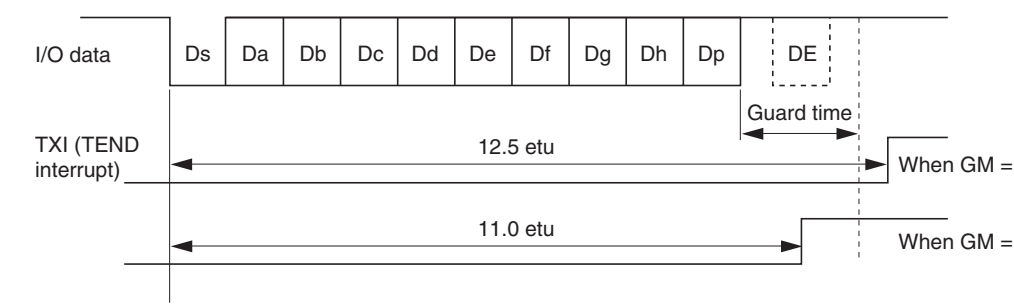

Figure 13.7 Timing of TEND Flag Setting

Receiving Serial Data: Data reception in smart card mode uses the same processing procedure as for the normal SCI. Figure 13.8 shows a sample reception processing flowchart.

1. Perform smart card interface mode initialization as described in Initialization above.
2. Check that the ORER flag and PER flag are cleared to 0 in SSR. If either is set, perform the appropriate receive error handling, then clear both the ORER and the PER flag to 0.
3. Repeat steps 2 and 3 until it can be confirmed that the RDRF flag is set to 1.
4. Read the receive data from RDR.
5. To continue receiving data, clear the RDRF flag to 0 and go back to step 2.
6. To end reception, clear the RE bit to 0.

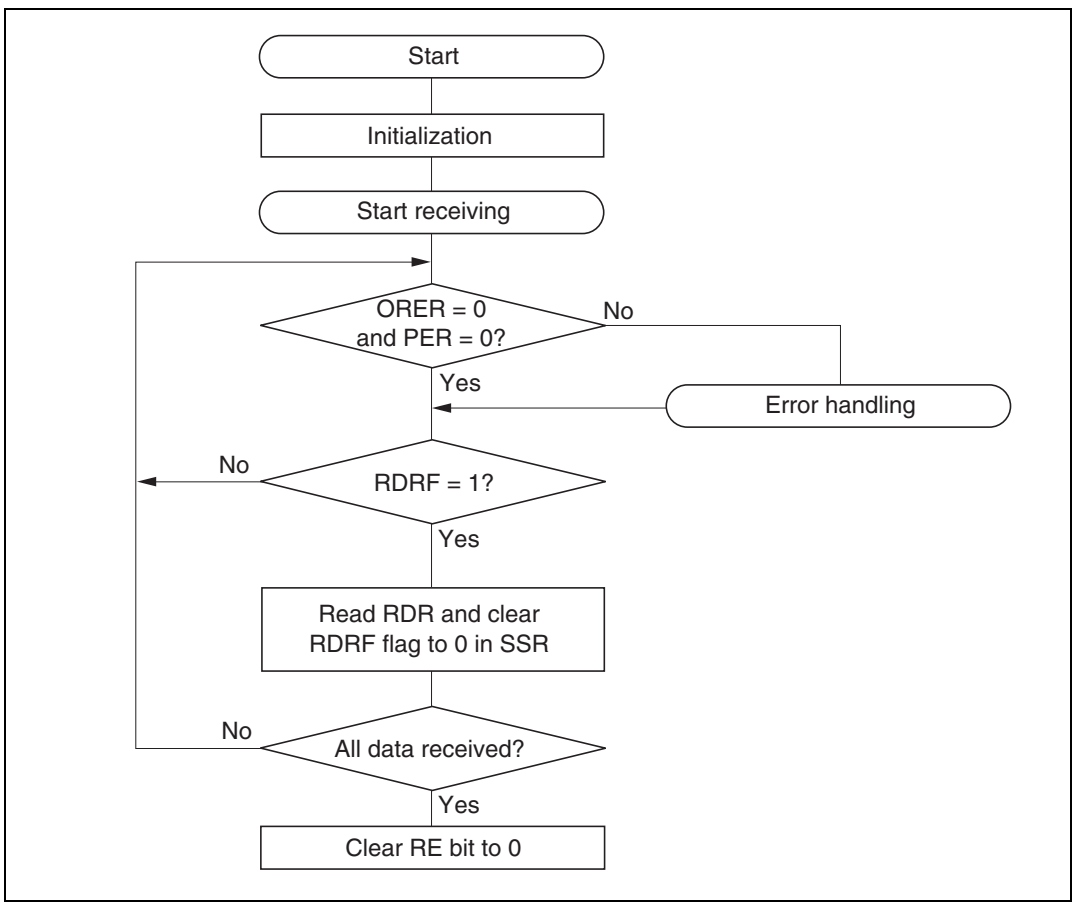

Figure 13.8 Sample Reception Processing Flowchart

The above procedure may include interrupt handling.

If reception ends and the RDRF flag is set to 1 while the RIE bit is set to 1 and interrupt requests are enabled, a receive-data-full interrupt (RXI) will be requested. If an error occurs in reception and either the ORER flag or the PER flag is set to 1, a transmit/receive-error interrupt (ERI) will be requested.

For details, see Interrupt Operations in this section.

If a parity error occurs during reception and the PER flag is set to 1, the received data is transferred to RDR, so the erroneous data can be read.

Switching Modes: When switching from receive mode to transmit mode, first confirm that the receive operation has been completed, then start from initialization, clearing RE to 0 and setting TE to 1. The RDRF, PER, or ORER flag can be used to check that the receive operation has been completed.

When switching from transmit mode to receive mode, first confirm that the transmit operation has been completed, then start from initialization, clearing TE to 0 and setting RE to 1. The TEND flag can be used to check that the transmit operation has been completed.

Fixing Clock Output: When the GM bit is set to 1 in SMR, clock output can be fixed by means of the CKE1 and CKE0 bits in SCR. The minimum clock pulse width can be set to the specified width in this case.

Figure 13.9 shows the timing for fixing clock output. In this example, GM = 1, CKE1 = 0, and the CKE0 bit is controlled.

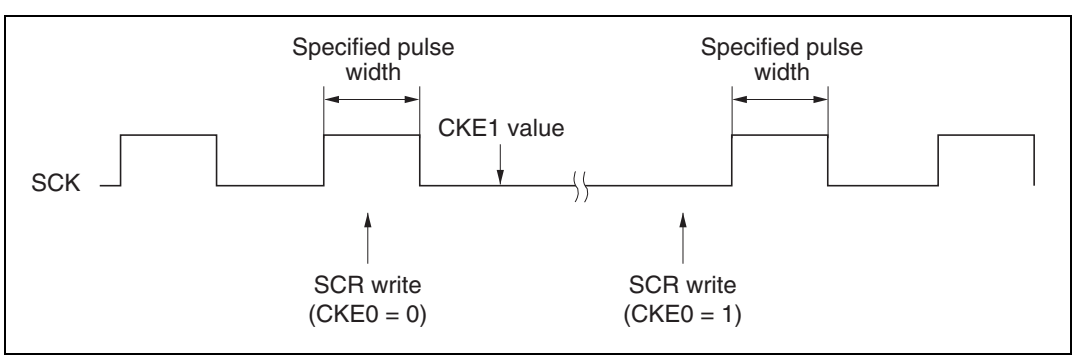

Figure 13.9 Timing for Fixing Cock Output

Interrupt Operations: The smart card interface has three interrupt sources: transmit-data-empty (TXI), transmit/receive-error (ERI), and receive-data-full (RXI). The transmit-end interrupt request (TEI) is not available in smart card mode.

A TXI interrupt is requested when the TEND flag is set to 1 in SSR. An RXI interrupt is requested when the RDRF flag is set to 1 in SSR. An ERI interrupt is requested when the ORER, PER, or ERS flag is set to 1 in SSR. These relationships are shown in table 13.8.

Table 13.8 Smart Card Interface Mode Operating States and Interrupt Sources

Operating State		Flag	Enable Bit	Interrupt Source
Transmit Mode	Normal operation	TEND	TIE	TXI
	Error	ERS	RIE	ERI
Receive Mode	Normal operation	RDRF	RIE	RXI
	Error	PER, ORER	RIE	ERI

Examples of Operation in GSM Mode: When switching between smart card interface mode and software standby mode, use the following procedures to maintain the clock duty cycle.

- Switching from smart card interface mode to software standby mode

1. Set the $P9_4$ data register (DR) and data direction register (DDR) to the values for the fixed output state in software standby mode.
2. Write 0 in the TE and RE bits in the serial control register (SCR) to stop transmit/receive operations. At the same time, set the CKE1 bit to the value for the fixed output state in software standby mode.
3. Write 0 in the CKE0 bit in SCR to stop the clock.
4. Wait for one serial clock cycle. During this period, the duty cycle is preserved and clock output is fixed at the specified level.
5. Write H'00 in the serial mode register (SMR) and smart card mode register (SCMR).
6. Make the transition to the software standby state.

- Returning from software standby mode to smart card interface mode

1'. Clear the software standby state.

2'. Set the CKE1 bit in SCR to the value for the fixed output state at the start of software standby (the current $P9_4$ pin state).

3'. Set smart card interface mode and output the clock. Clock signal generation is started with the normal duty cycle.

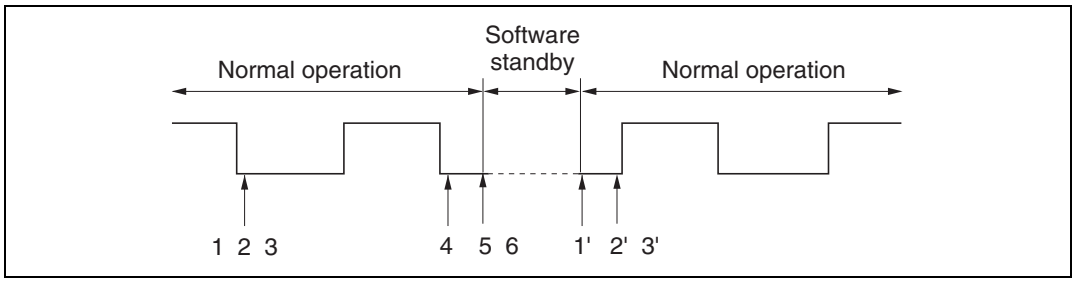

Figure 13.10 Procedure for Stopping and Restarting the Clock

Use the following procedure to secure the clock duty cycle after powering on.

1. The initial state is port input and high impedance. Use pull-up or pull-down resistors to fix the potential.
2. Fix at the output specified by the CKE1 bit in SCR.
3. Set SMR and SCMR, and switch to smart card interface mode operation.
4. Set the CKE0 bit to 1 in SCR to start clock output.

13.4 Usage Notes

The following points should be noted when using the SCI as a smart card interface.

Receive Data Sampling Timing and Receive Margin in Smart Card Interface Mode: In smart card interface mode, the SCI operates on a base clock with a frequency of 372 times the transfer rate. In reception, the SCI synchronizes internally with the fall of the start bit, which it samples on the base clock. Receive data is latched at the rising edge of the 186th base clock pulse. The timing is shown in figure 13.11.

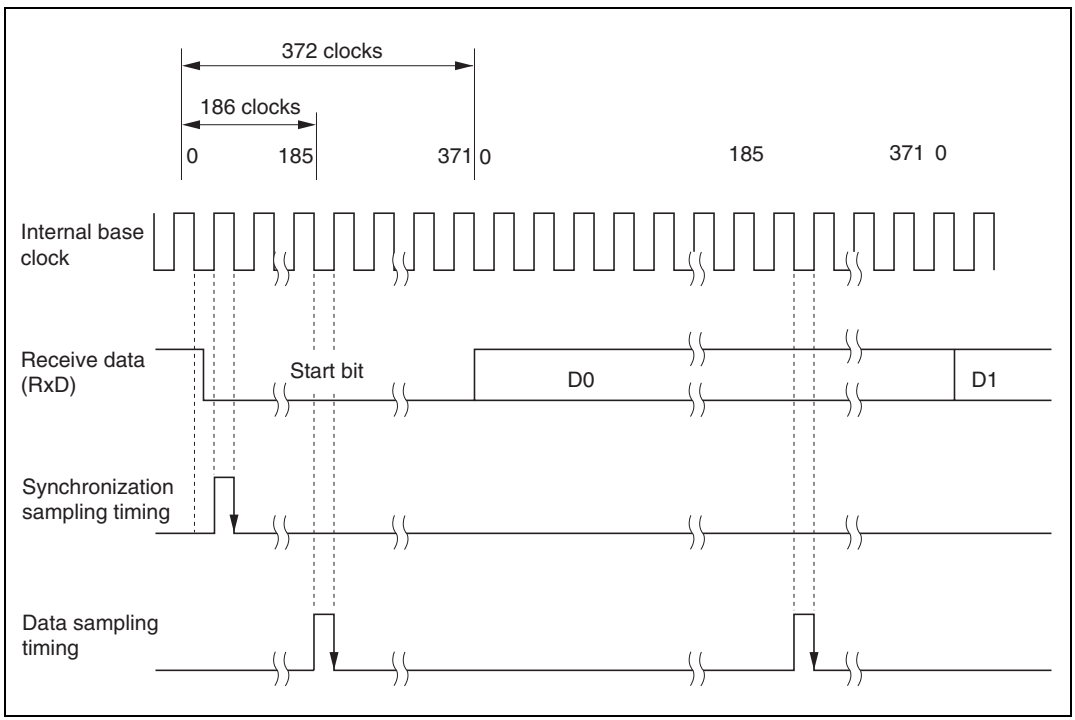

Figure 13.11 Receive Data Sampling Timing in Smart Card Interface Mode

The receive margin can therefore be expressed as follows.

Receive margin in smart card interface mode:

$$M = \left| (0.5 - \frac{1}{2N}) - (L - 0.5)\,F - \frac{|D - 0.5|}{N}\,(1 + F) \right| \times 100\%$$

Legend:
M: Receive margin (%)
N: Ratio of clock frequency to bit rate (N = 372)
D: Clock duty cycle (D = 0 to 1.0)
L: Frame length (L =10)
F: Absolute deviation of clock frequency

From the above equation, if F = 0 and D = 0.5, the receive margin is as follows.

When D = 0.5 and F = 0:

$$M = (0.5 - 1/2 \times 372) \times 100\%$$
$$= 49.866\%$$

Retransmission: Retransmission is performed by the SCI in receive mode and transmit mode as described below.

- Retransmission when SCI is in Receive Mode

  Figure 13.12 illustrates retransmission when the SCI is in receive mode.

1. If an error is found when the received parity bit is checked, the PER bit is automatically set to 1. If the RIE bit in SCR is set to the enable state, an ERI interrupt is requested. The PER bit should be cleared to 0 in SSR before the next parity bit sampling timing.
2. The RDRF bit in SSR is not set for the frame in which the error has occurred.
3. If an error is found when the received parity bit is checked, the PER bit is not set to 1 in SSR.
4. If no error is found when the received parity bit is checked, the receive operation is assumed to have been completed normally, and the RDRF bit is automatically set to 1 in SSR. If the RIE bit in SCR is set to the enable state, an RXI interrupt is requested.
5. When a normal frame is received, the data pin is held in three-state at the error signal transmission timing.

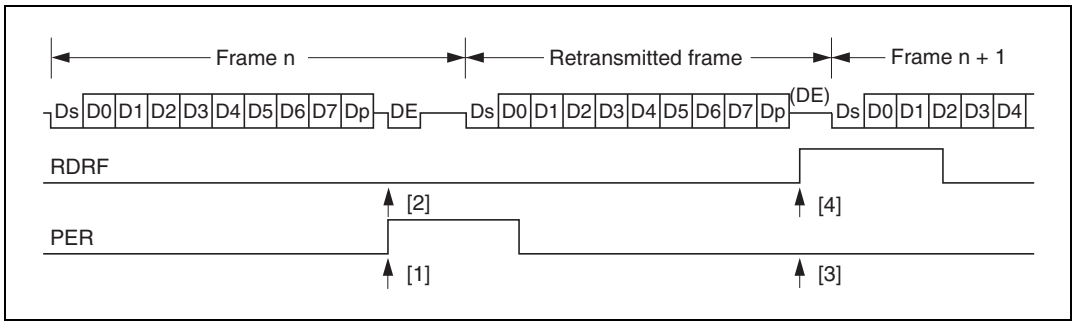

Figure 13.12 Retransmission in SCI Receive Mode

- Retransmission when SCI is in Transmit Mode

  Figure 13.13 illustrates retransmission when the SCI is in transmit mode.

6. If an error signal is sent back from the receiving device after transmission of one frame is completed, the ERS bit is set to 1 in SSR. If the RIE bit in SCR is set to the enable state, an ERI interrupt is requested. The ERS bit should be cleared to 0 in SSR before the next parity bit sampling timing.
7. The TEND bit in SSR is not set for the frame for which the error signal was received.
8. If an error signal is not sent back from the receiving device, the ERS flag is not set in SSR.
9. If an error signal is not sent back from the receiving device, transmission of one frame, including retransmission, is assumed to have been completed, and the TEND bit is set to 1 in SSR. If the TIE bit in SCR is set to the enable state, a TXI interrupt is requested.

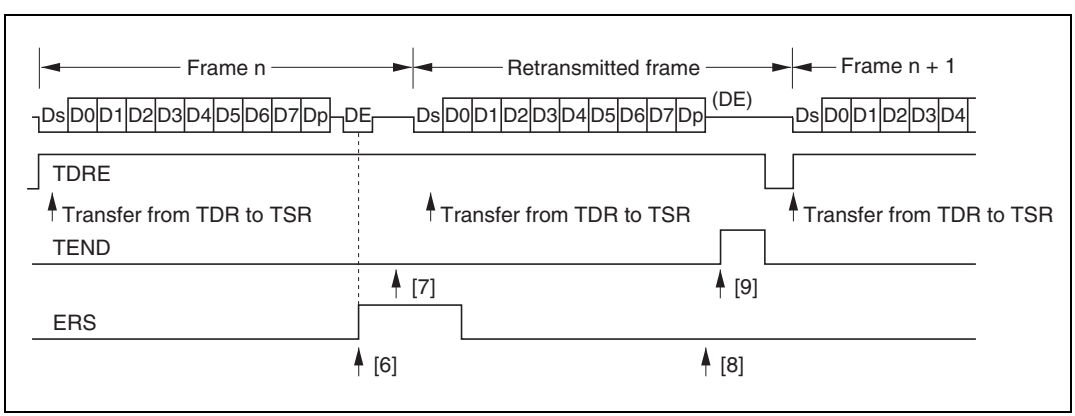

Figure 13.13 Retransmission in SCI Transmit Mode

Note on Block Transfer Mode Support: The smart card interface installed in the H8/3008 supports an IC card (smart card) interface with provision for ISO/IEC7816-3 T = 0 (character transmission). Therefore, block transfer operations are not supported (error signal transmission, detection, and automatic data retransmission are not performed).

Section 14 A/D Converter

14.1 Overview

The H8/3008 includes a 10-bit successive-approximations A/D converter with a selection of up to eight analog input channels.

When the A/D converter is not used, it can be halted independently to conserve power. For details see section 18.6, Module Standby Function.

The H8/3008 supports 70/134-state conversion as a high-speed conversion mode. Note that it differs in this respect from the H8/3048 Group, which supports 134/266-state conversion.

14.1.1 Features

A/D converter features are listed below.

- 10-bit resolution
- Eight input channels
- Selectable analog conversion voltage range

  The analog voltage conversion range can be programmed by input of an analog reference voltage at the V_{REF} pin.
- High-speed conversion

  Conversion time: minimum 5.36 μs per channel
- Two conversion modes

  Single mode: A/D conversion of one channel

  Scan mode: continuous A/D conversion on one to four channels
- Four 16-bit data registers

  A/D conversion results are transferred for storage into data registers corresponding to the channels.
- Sample-and-hold function
- Three conversion start sources

  The A/D converter can be activated by software, an external trigger, or an 8-bit timer compare match.
- A/D interrupt requested at end of conversion

  At the end of A/D conversion, an A/D end interrupt (ADI) can be requested.

14.1.2 Block Diagram

Figure 14.1 shows a block diagram of the A/D converter.

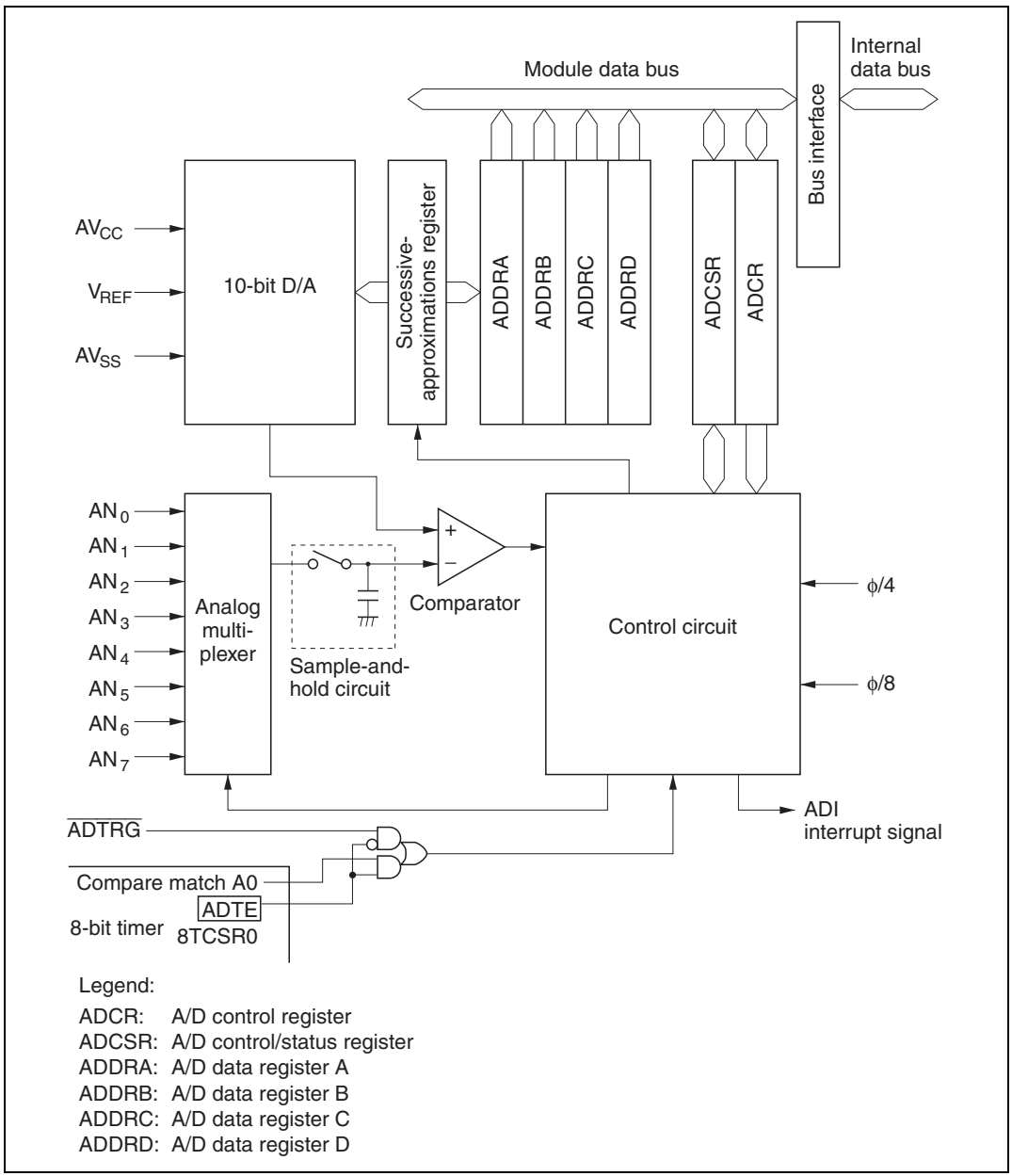

Figure 14.1 A/D Converter Block Diagram

14.1.3 Pin Configuration

Table 14.1 summarizes the A/D converter's input pins. The eight analog input pins are divided into two groups: group 0 (AN_0 to AN_3), and group 1 (AN_4 to AN_7). AV_{CC} and AV_{SS} are the power supply for the analog circuits in the A/D converter. V_{REF} is the A/D conversion reference voltage.

Table 14.1 A/D Converter Pins

Pin Name	Abbreviation	I/O	Function
Analog power supply pin	AV_{CC}	Input	Analog power supply
Analog ground pin	AV_{SS}	Input	Analog ground and reference voltage
Reference voltage pin	V_{REF}	Input	Analog reference voltage
Analog input pin 0	AN_0	Input	Group 0 analog inputs
Analog input pin 1	AN_1	Input	
Analog input pin 2	AN_2	Input	
Analog input pin 3	AN_3	Input	
Analog input pin 4	AN_4	Input	Group 1 analog inputs
Analog input pin 5	AN_5	Input	
Analog input pin 6	AN_6	Input	
Analog input pin 7	AN_7	Input	
A/D external trigger input pin	$\overline{ADTRG}$	Input	External trigger input for starting A/D conversion

14.1.4 Register Configuration

Table 14.2 summarizes the A/D converter's registers.

Table 14.2 A/D Converter Registers

Address*[1]	Name	Abbreviation	R/W	Initial Value
H'FFFE0	A/D data register A H	ADDRAH	R	H'00
H'FFFE1	A/D data register A L	ADDRAL	R	H'00
H'FFFE2	A/D data register B H	ADDRBH	R	H'00
H'FFFE3	A/D data register B L	ADDRBL	R	H'00
H'FFFE4	A/D data register C H	ADDRCH	R	H'00
H'FFFE5	A/D data register C L	ADDRCL	R	H'00
H'FFFE6	A/D data register D H	ADDRDH	R	H'00
H'FFFE7	A/D data register D L	ADDRDL	R	H'00
H'FFFE8	A/D control/status register	ADCSR	R/(W)*[2]	H'00
H'FFFE9	A/D control register	ADCR	R/W	H'7E

Notes: 1. Lower 20 bits of the address in advanced mode.
2. Only 0 can be written in bit 7, to clear the flag.

14.2 Register Descriptions

14.2.1 A/D Data Registers A to D (ADDRA to ADDRD)

Bit	15	14	13	12	11	10	9	8	7	6	5	4	3	2	1	0
ADDRn	AD9	AD8	AD7	AD6	AD5	AD4	AD3	AD2	AD1	AD0	—	—	—	—	—	—
Initial value	0	0	0	0	0	0	0	0	0	0	0	0	0	0	0	0
Read/Write	R	R	R	R	R	R	R	R	R	R	R	R	R	R	R	R

A/D conversion data
10-bit data giving an
A/D conversion result

Reserved bits

Note: n = A to D

The four A/D data registers (ADDRA to ADDRD) are 16-bit read-only registers that store the results of A/D conversion.

An A/D conversion produces 10-bit data, which is transferred for storage into the A/D data register corresponding to the selected channel. The upper 8 bits of the result are stored in the upper byte of the A/D data register. The lower 2 bits are stored in the lower byte. Bits 5 to 0 of an A/D data register are reserved bits that are always read as 0. Table 14.3 indicates the pairings of analog input channels and A/D data registers.

The CPU can always read the A/D data registers. The upper byte can be read directly, but the lower byte is read through a temporary register (TEMP). For details see section 14.3, CPU Interface.

The A/D data registers are initialized to H'0000 by a reset and in standby mode.

Table 14.3 Analog Input Channels and A/D Data Registers (ADDRA to ADDRD)

Analog Input Channel		
Group 0	**Group 1**	**A/D Data Register**
AN_0	AN_4	ADDRA
AN_1	AN_5	ADDRB
AN_2	AN_6	ADDRC
AN_3	AN_7	ADDRD

14.2.2 A/D Control/Status Register (ADCSR)

Bit	7	6	5	4	3	2	1	0
	ADF	ADIE	ADST	SCAN	CKS	CH2	CH1	CH0
Initial value	0	0	0	0	0	0	0	0
Read/Write	R/(W) *	R/W	R/W	R/W	R/W	R/W	R/W	R/W

Channel select 2 to 0
These bits select analog input channels

Clock select
Selects the A/D conversion time

Scan mode
Selects single mode or scan mode

A/D start
Starts or stops A/D conversion

A/D interrupt enable
Enables and disables A/D end interrupts

A/D end flag
Indicates end of A/D conversion

Note: * Only 0 can be written, to clear the flag.

ADCSR is an 8-bit readable/writable register that selects the mode and controls the A/D converter. ADCSR is initialized to H'00 by a reset and in standby mode.

Bit 7—A/D End Flag (ADF): Indicates the end of A/D conversion.

Bit 7 ADF	Description
0	[Clearing condition] (Initial value) Read ADF when ADF = 1, then write 0 in ADF.
1	[Setting conditions] • Single mode: A/D conversion ends • Scan mode: A/D conversion ends in all selected channels

Bit 6—A/D Interrupt Enable (ADIE): Enables or disables the interrupt (ADI) requested at the end of A/D conversion.

Bit 6 ADIE	Description	
0	A/D end interrupt request (ADI) is disabled	(Initial value)
1	A/D end interrupt request (ADI) is enabled	

Bit 5—A/D Start (ADST): Starts or stops A/D conversion. The ADST bit remains set to 1 during A/D conversion. It can also be set to 1 by external trigger input at the $\overline{\text{ADTRG}}$ pin, or by an 8-bit timer compare match.

Bit 5 ADST	Description	
0	A/D conversion is stopped	(Initial value)
1	Single mode: A/D conversion starts; ADST is automatically cleared to 0 when conversion ends. Scan mode: A/D conversion starts and continues, cycling among the selected channels, until ADST is cleared to 0 by software, by a reset, or by a transition to standby mode.	

Bit 4—Scan Mode (SCAN): Selects single mode or scan mode. For further information on operation in these modes, see section 14.4, Operation. Clear the ADST bit to 0 before switching the conversion mode.

Bit 4 SCAN	Description	
0	Single mode	(Initial value)
1	Scan mode	

Bit 3—Clock Select (CKS): Selects the A/D conversion time. Clear the ADST bit to 0 before switching the conversion time.

Bit 3 CKS	Description	
0	Conversion time = 134 states (maximum)	(Initial value)
1	Conversion time = 70 states (maximum)	

Bits 2 to 0—Channel Select 2 to 0 (CH2 to CH0): These bits and the SCAN bit select the analog input channels. Clear the ADST bit to 0 before changing the channel selection.

Group Selection	Channel Selection		Description	
CH2	**CH1**	**CH0**	**Single Mode**	**Scan Mode**
0	0	0	AN_0 (Initial value)	AN_0
		1	AN_1	AN_0, AN_1
	1	0	AN_2	AN_0 to AN_2
		1	AN_3	AN_0 to AN_3
1	0	0	AN_4	AN_4
		1	AN_5	AN_4, AN_5
	1	0	AN_6	AN_4 to AN_6
		1	AN_7	AN_4 to AN_7

14.2.3 A/D Control Register (ADCR)

Bit	7	6	5	4	3	2	1	0
	TRGE	—	—	—	—	—	—	—
Initial value	0	1	1	1	1	1	1	0
Read/Write	R/W	—	—	—	—	—	—	R/W

Reserved bits

Trigger enable
Enables or disables starting of A/D conversion by an external trigger or 8-bit timer compare match

ADCR is an 8-bit readable/writable register that enables or disables starting of A/D conversion by external trigger input or an 8-bit timer compare match signal. ADCR is initialized to H'7F by a reset and in standby mode.

Bit 7—Trigger Enable (TRGE): Enables or disables starting of A/D conversion by an external trigger or 8-bit timer compare match.

Bit 7 TRGE	Description	
0	Starting of A/D conversion by an external trigger or 8-bit timer compare match is disabled	(Initial value)
1	A/D conversion is started at the falling edge of the external trigger signal ($\overline{\text{ADTRG}}$) or by an 8-bit timer compare match	

External trigger pin and 8-bit timer selection is performed by the 8-bit timer. For details, see section 9, 8-Bit Timers.

Bits 6 to 1—Reserved: These bits cannot be modified and are always read as 1.

Bit 0—Reserved: This bit can be read or written, but must not be set to 1.

14.3 CPU Interface

ADDRA to ADDRD are 16-bit registers, but they are connected to the CPU by an 8-bit data bus. Therefore, although the upper byte can be be accessed directly by the CPU, the lower byte is read through an 8-bit temporary register (TEMP).

An A/D data register is read as follows. When the upper byte is read, the upper-byte value is transferred directly to the CPU and the lower-byte value is transferred into TEMP. Next, when the lower byte is read, the TEMP contents are transferred to the CPU.

When reading an A/D data register, always read the upper byte before the lower byte. It is possible to read only the upper byte, but if only the lower byte is read, incorrect data may be obtained.

Figure 14.2 shows the data flow for access to an A/D data register.

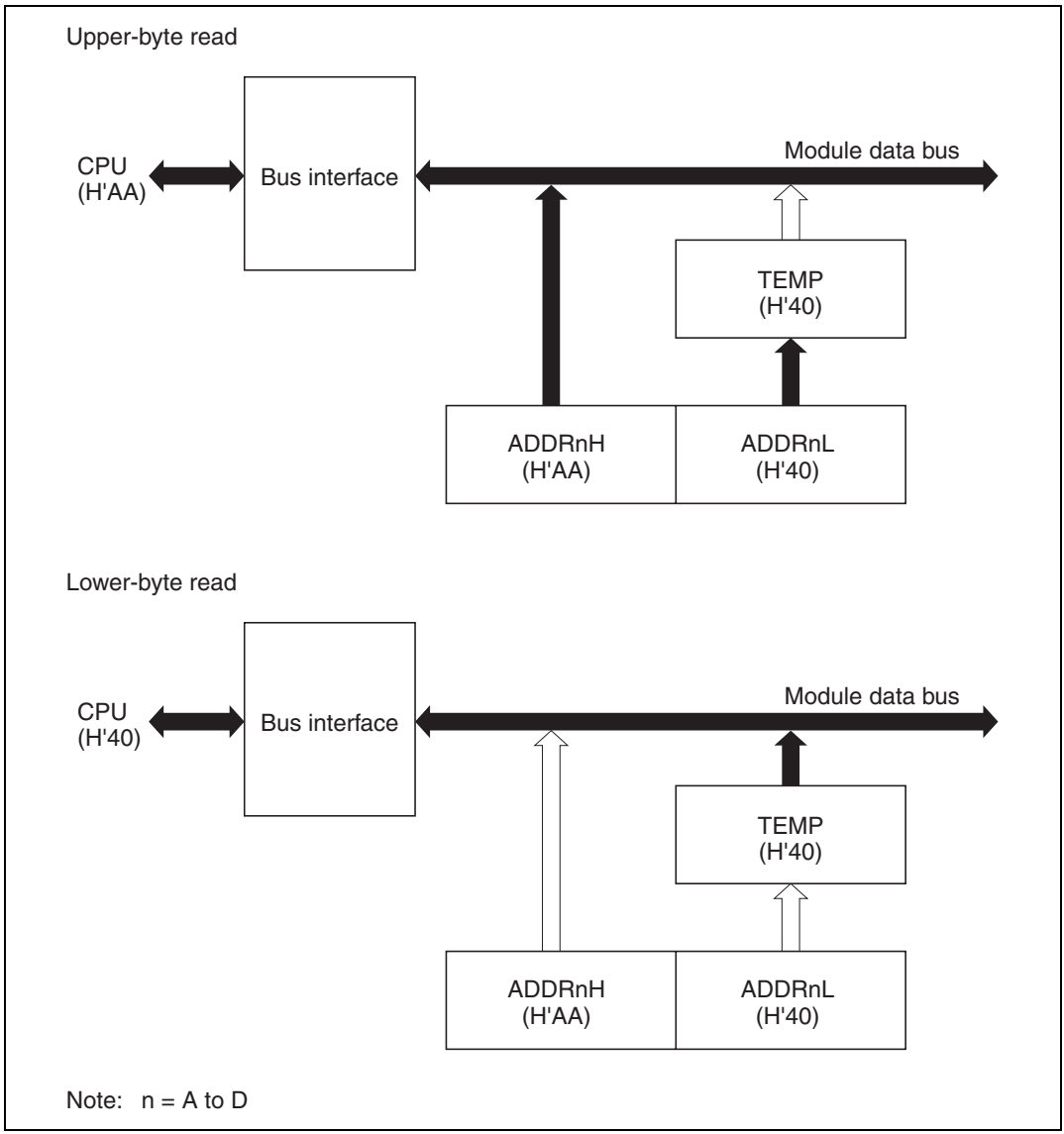

Figure 14.2 A/D Data Register Access Operation (Reading H'AA40)

14.4 Operation

The A/D converter operates by successive approximations with 10-bit resolution. It has two operating modes: single mode and scan mode.

14.4.1 Single Mode (SCAN = 0)

Single mode should be selected when only one A/D conversion on one channel is required. A/D conversion starts when the ADST bit is set to 1 by software, or by external trigger input. The ADST bit remains set to 1 during A/D conversion and is automatically cleared to 0 when conversion ends.

When conversion ends the ADF flag is set to 1. If the ADIE bit is also set to 1, an ADI interrupt is requested at this time. To clear the ADF flag to 0, first read ADCSR, then write 0 in ADF.

When the mode or analog input channel must be switched during analog conversion, to prevent incorrect operation, first clear the ADST bit to 0 in ADCSR to halt A/D conversion. After making the necessary changes, set the ADST bit to 1 to start A/D conversion again. The ADST bit can be set at the same time as the mode or channel is changed.

Typical operations when channel 1 (AN_1) is selected in single mode are described next.

Figure 14.3 shows a timing diagram for this example.

1. Single mode is selected (SCAN = 0), input channel AN_1 is selected (CH2 = CH1 = 0, CH0 = 1), the A/D interrupt is enabled (ADIE = 1), and A/D conversion is started (ADST = 1).
2. When A/D conversion is completed, the result is transferred into ADDRB. At the same time the ADF flag is set to 1, the ADST bit is cleared to 0, and the A/D converter becomes idle.
3. Since ADF = 1 and ADIE = 1, an ADI interrupt is requested.
4. The A/D interrupt handling routine starts.
5. The routine reads ADCSR, then writes 0 in the ADF flag.
6. The routine reads and processes the conversion result (ADDRB).
7. Execution of the A/D interrupt handling routine ends. After that, if the ADST bit is set to 1, A/D conversion starts again and steps 2 to 7 are repeated.

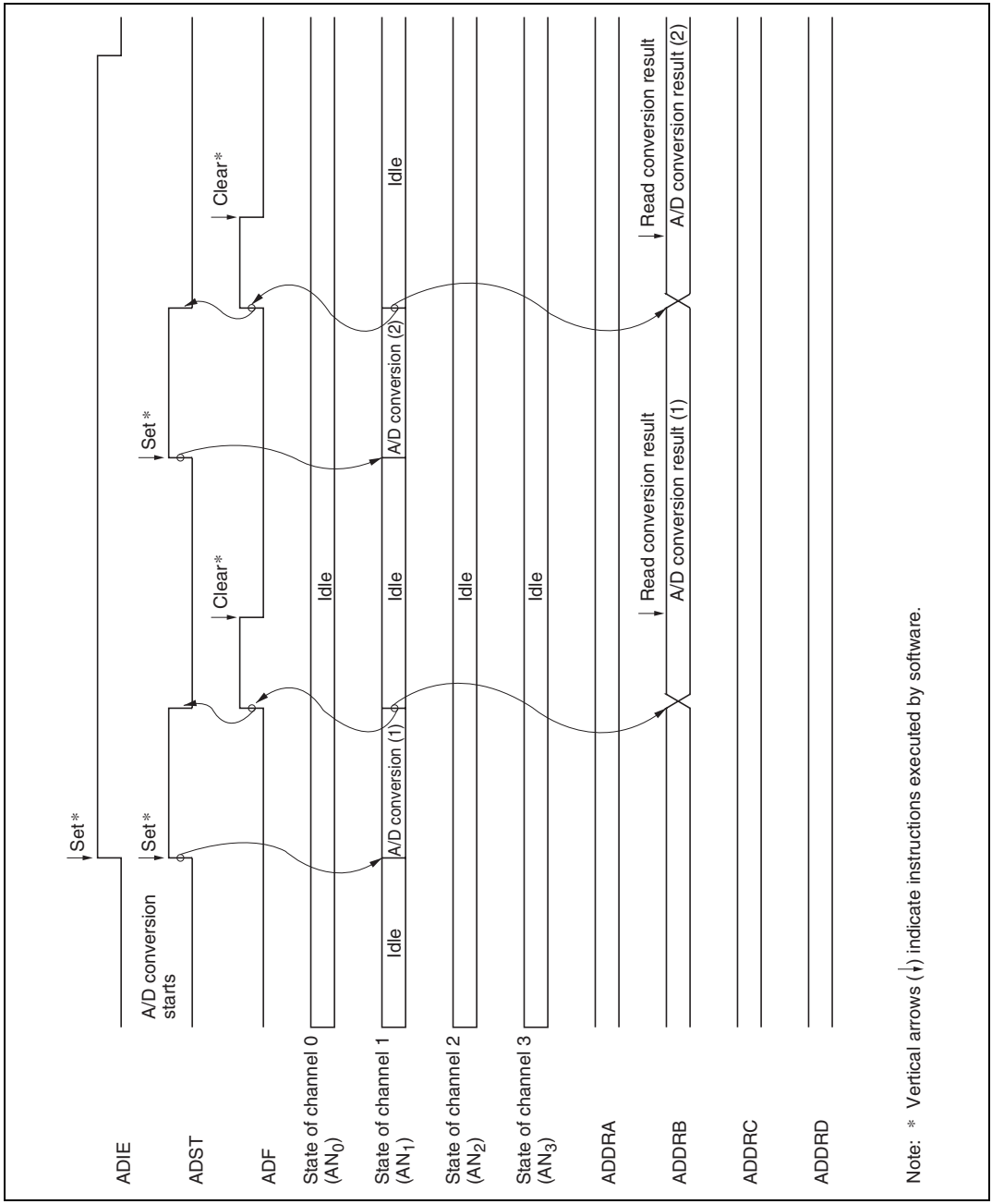

Figure 14.3 Example of A/D Converter Operation (Single Mode, Channel 1 Selected)

14.4.2 Scan Mode (SCAN = 1)

Scan mode is useful for monitoring analog inputs in a group of one or more channels. When the ADST bit is set to 1 by software or external trigger input, A/D conversion starts on the first channel in the group (AN_0 when CH2 = 0, AN_4 when CH2 = 1). When two or more channels are selected, after conversion of the first channel ends, conversion of the second channel (AN_1 or AN_5) starts immediately. A/D conversion continues cyclically on the selected channels until the ADST bit is cleared to 0. The conversion results are transferred for storage into the A/D data registers corresponding to the channels.

When the mode or analog input channel selection must be changed during analog conversion, to prevent incorrect operation, first clear the ADST bit to 0 in ADCSR to halt A/D conversion. After making the necessary changes, set the ADST bit to 1. A/D conversion will start again from the first channel in the group. The ADST bit can be set at the same time as the mode or channel selection is changed.

Typical operations when three channels in group 0 (AN_0 to AN_2) are selected in scan mode are described next. Figure 14.4 shows a timing diagram for this example.

1. Scan mode is selected (SCAN = 1), scan group 0 is selected (CH2 = 0), analog input channels AN_0 to AN_2 are selected (CH1 = 1, CH0 = 0), and A/D conversion is started (ADST = 1).
2. When A/D conversion of the first channel (AN_0) is completed, the result is transferred into ADDRA. Next, conversion of the second channel (AN_1) starts automatically.
3. Conversion proceeds in the same way through the third channel (AN_2).
4. When conversion of all selected channels (AN_0 to AN_2) is completed, the ADF flag is set to 1 and conversion of the first channel (AN_0) starts again. If the ADIE bit is set to 1, an ADI interrupt is requested when A/D conversion ends.
5. Steps 2 to 4 are repeated as long as the ADST bit remains set to 1. When the ADST bit is cleared to 0, A/D conversion stops. After that, if the ADST bit is set to 1, A/D conversion starts again from the first channel (AN_0).

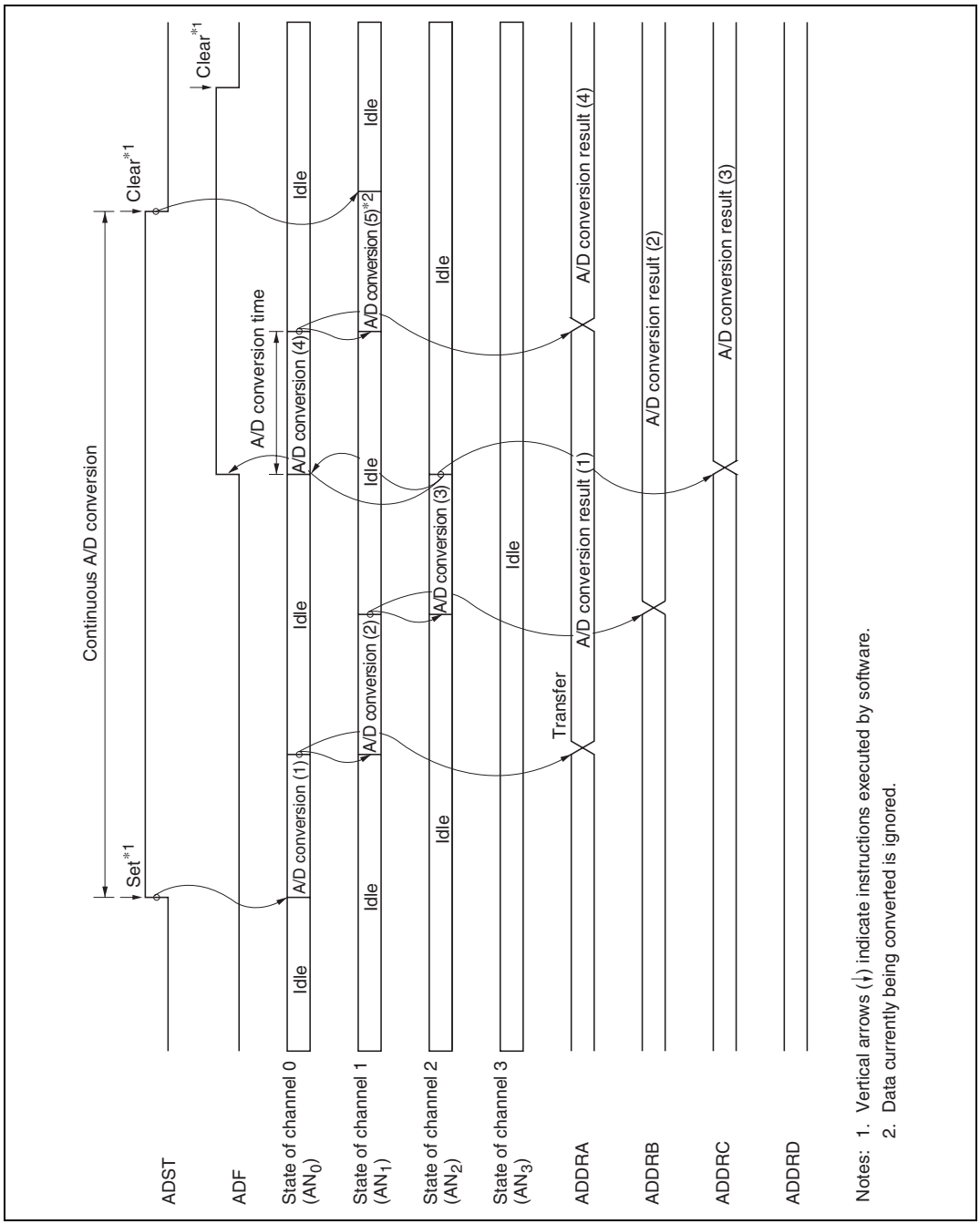

Figure 14.4 Example of A/D Converter Operation (Scan Mode, Channels AN_0 to AN_2 Selected)

14.4.3 Input Sampling and A/D Conversion Time

The A/D converter has a built-in sample-and-hold circuit. The A/D converter samples the analog input at a time t_D after the ADST bit is set to 1, then starts conversion. Figure 14.5 shows the A/D conversion timing. Table 14.4 indicates the A/D conversion time.

As indicated in figure 14.5, the A/D conversion time includes t_D and the input sampling time. The length of t_D varies depending on the timing of the write access to ADCSR. The total conversion time therefore varies within the ranges indicated in table 14.4.

In scan mode, the values given in table 14.4 apply to the first conversion. In the second and subsequent conversions the conversion time is fixed at 128 states when CKS = 0 or 66 states when CKS = 1.

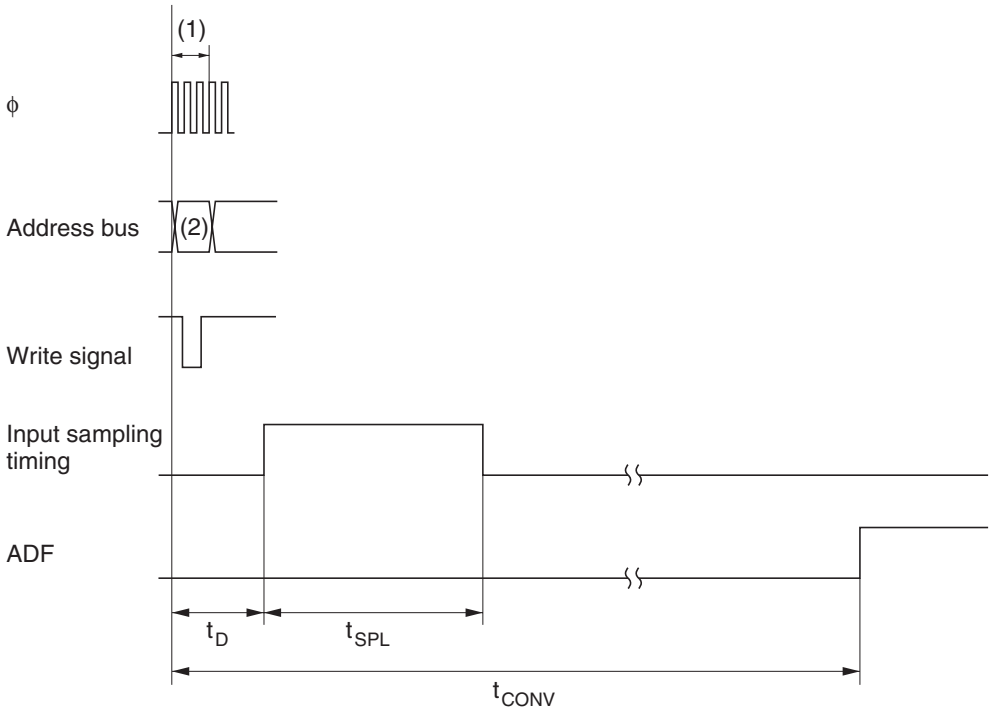

Legend:
(1): ADCSR write cycle
(2): ADCSR address
t_D : Synchronization delay
t_{SPL} : Input sampling time
t_{CONV} : A/D conversion time

Figure 14.5 A/D Conversion Timing

Table 14.4 A/D Conversion Time (Single Mode)

		CKS = 0			CKS = 1		
	Symbol	Min	Typ	Max	Min	Typ	Max
Synchronization delay	t_D	6	—	9	4	—	5
Input sampling time	t_{SPL}	—	31	—	—	15	—
A/D conversion time	t_{CONV}	131	—	134	69	—	70

Note: Values in the table are numbers of states.

14.4.4 External Trigger Input Timing

A/D conversion can be externally triggered. When the TRGE bit is set to 1 in ADCR and the 8-bit timer's ADTE bit is cleared to 0, external trigger input is enabled at the $\overline{\text{ADTRG}}$ pin. A high-to-low transition at the $\overline{\text{ADTRG}}$ pin sets the ADST bit to 1 in ADCSR, starting A/D conversion. Other operations, in both single and scan modes, are the same as if the ADST bit had been set to 1 by software. Figure 14.6 shows the timing.

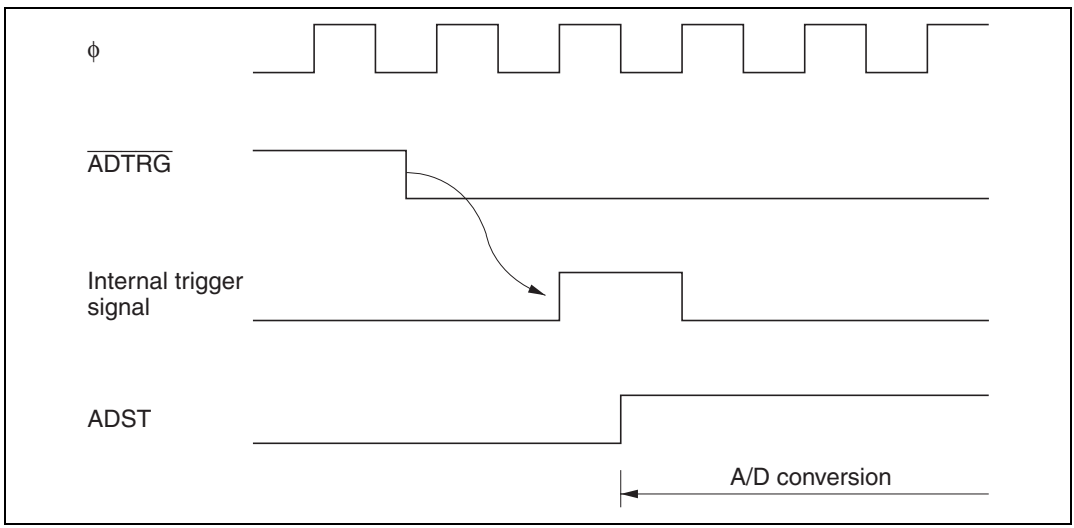

Figure 14.6 External Trigger Input Timing

14.5 Interrupts

The A/D converter generates an interrupt (ADI) at the end of A/D conversion. The ADI interrupt request can be enabled or disabled by the ADIE bit in ADCSR.

14.6 Usage Notes

When using the A/D converter, note the following points:

1. Analog Input Voltage Range

   During A/D conversion, the voltages input to the analog input pins AN_n should be in the range $AV_{SS} \leq AN_n \leq V_{REF}$.

2. Relationships of AV_{CC} and AV_{SS} to V_{CC} and V_{SS}

   AV_{CC}, AV_{SS}, V_{CC}, and V_{SS} should be related as follows: $AV_{SS} = V_{SS}$. AV_{CC} and AV_{SS} must not be left open, even if the A/D converter is not used.

3. V_{REF} Programming Range

   The reference voltage input at the V_{REF} pin should be in the range $V_{REF} \leq AV_{CC}$.

4. Note on Board Design

   In board layout, separate the digital circuits from the analog circuits as much as possible. Particularly avoid layouts in which the signal lines of digital circuits cross or closely approach the signal lines of analog circuits. Induction and other effects may cause the analog circuits to operate incorrectly, or may adversely affect the accuracy of A/D conversion.

   The analog input signals (AN_0 to AN_7), analog reference voltage (V_{REF}), and analog supply voltage (AV_{CC}) must be separated from digital circuits by the analog ground (AV_{SS}). The analog ground (AV_{SS}) should be connected to a stable digital ground (V_{SS}) at one point on the board.

5. Note on Noise

   To prevent damage from surges and other abnormal voltages at the analog input pins (AN_0 to AN_7) and analog reference voltage pin (V_{REF}), connect a protection circuit like the one in figure 14.7 between AV_{CC} and AV_{SS}. The bypass capacitors connected to AV_{CC} and V_{REF} and the filter capacitors connected to AN_0 to AN_7 must be connected to AV_{SS}. If filter capacitors like the ones in figure 14.7 are connected, the voltage values input to the analog input pins (AN_0 to AN_7) will be smoothed, which may give rise to error. Error can also occur if A/D conversion is frequently performed in scan mode so that the current that charges and discharges the capacitor in the sample-and-hold circuit of the A/D converter becomes greater than that input to the analog input pins via input impedance (Rin). The circuit constants should therefore be selected carefully.

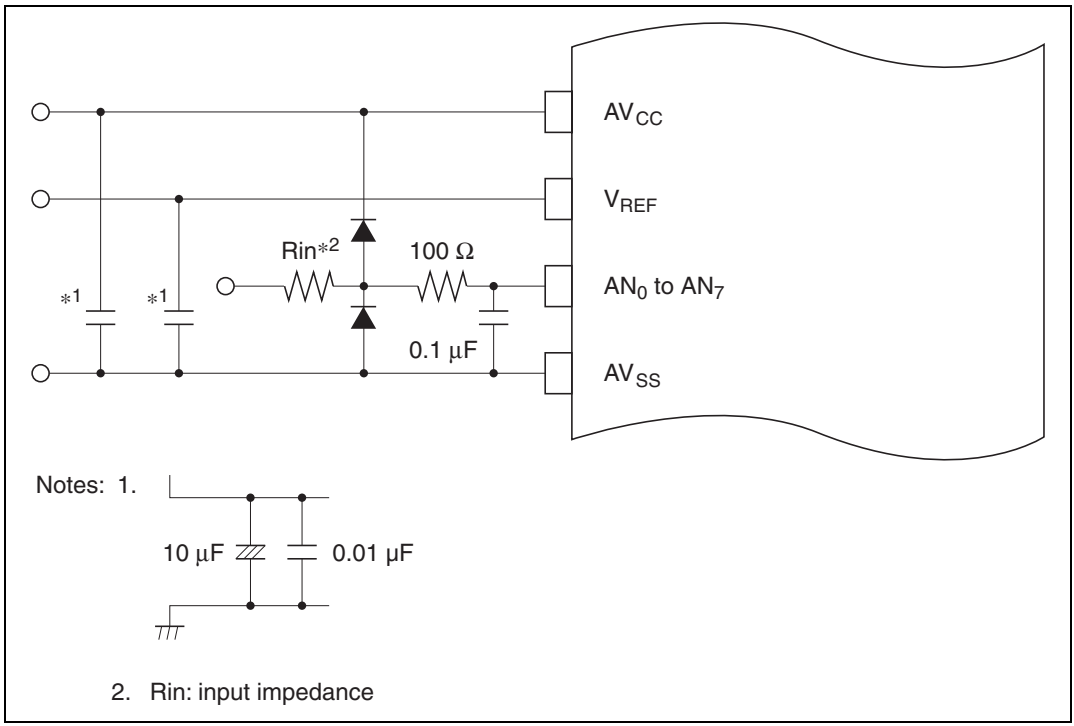

Figure 14.7 Example of Analog Input Protection Circuit

Table 14.5 Analog Input Pin Ratings

Item	Min	Max	Unit
Analog input capacitance	—	20	pF
Allowable signal-source impedance	—	10*	kΩ

Note: * When conversion time = 134 states, V_{cc} = 4.0 V to 5.5 V, and $\phi \leq$ 13 MHz. For details, see section 19. Electrical Characteristics.

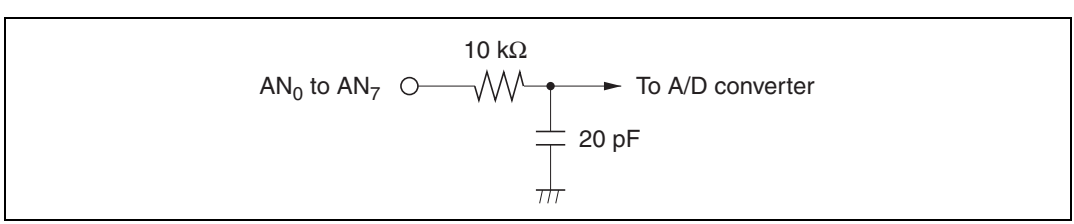

Figure 14.8 Analog Input Pin Equivalent Circuit

Note: Numeric values are approximate, except in table 14.5

6. A/D Conversion Accuracy Definitions

A/D conversion accuracy in the H8/3008 is defined as follows:

— Resolution

Digital output code length of A/D converter

— Offset error

Deviation from ideal A/D conversion characteristic of analog input voltage required to raise digital output from minimum voltage value 0000000000 to 0000000001 (figure 14.10)

— Full-scale error

Deviation from ideal A/D conversion characteristic of analog input voltage required to raise digital output from 1111111110 to 1111111111 (figure 14.10)

— Quantization error

Intrinsic error of the A/D converter; 1/2 LSB (figure 14.9)

— Nonlinearity error

Deviation from ideal A/D conversion characteristic in range from zero volts to full scale, exclusive of offset error, full-scale error, and quantization error.

— Absolute accuracy

Deviation of digital value from analog input value, including offset error, full-scale error, quantization error, and nonlinearity error.

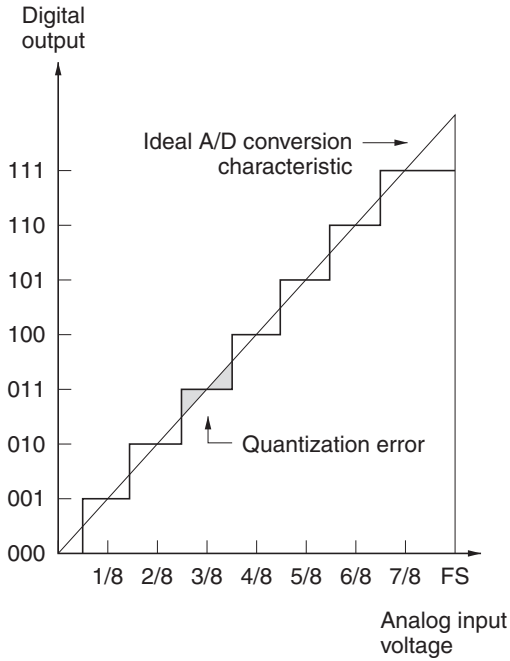

Figure 14.9 A/D Converter Accuracy Definitions (1)

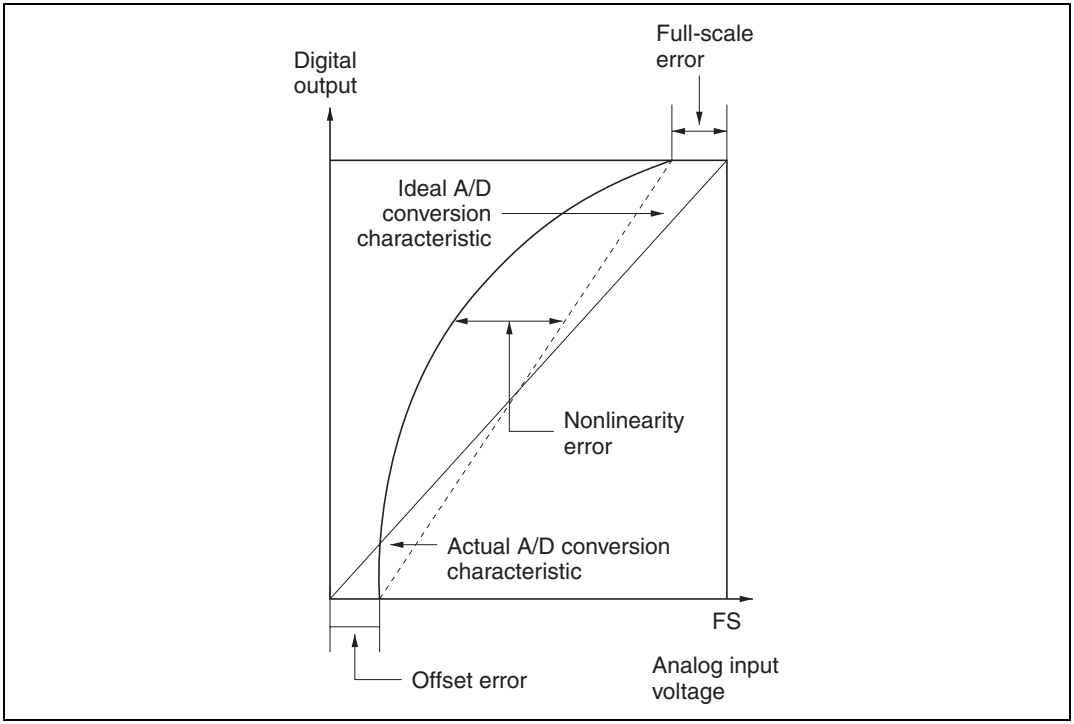

Figure 14.10 A/D Converter Accuracy Definitions (2)

7. Allowable Signal-Source Impedance

   The analog inputs of the H8/3008 are designed to assure accurate conversion of input signals with a signal-source impedance not exceeding 10 kΩ. The reason for this rating is that it enables the input capacitor in the sample-and-hold circuit in the A/D converter to charge within the sampling time. If the sensor output impedance exceeds 10 kΩ, charging may be inadequate and the accuracy of A/D conversion cannot be guaranteed.

   If a large external capacitor is provided in single mode, then the internal 10-kΩ input resistance becomes the only significant load on the input. In this case the impedance of the signal source is not a problem.

   A large external capacitor, however, acts as a low-pass filter. This may make it impossible to track analog signals with high dv/dt (e.g. a variation of 5 mV/μs) (figure 14.11). To convert high-speed analog signals or to use scan mode, insert a low-impedance buffer.

8. Effect on Absolute Accuracy

   Attaching an external capacitor creates a coupling with ground, so if there is noise on the ground line, it may degrade absolute accuracy. The capacitor must be connected to an electrically stable ground, such as AV_{SS}.

If a filter circuit is used, be careful of interference with digital signals on the same board, and make sure the circuit does not act as an antenna.

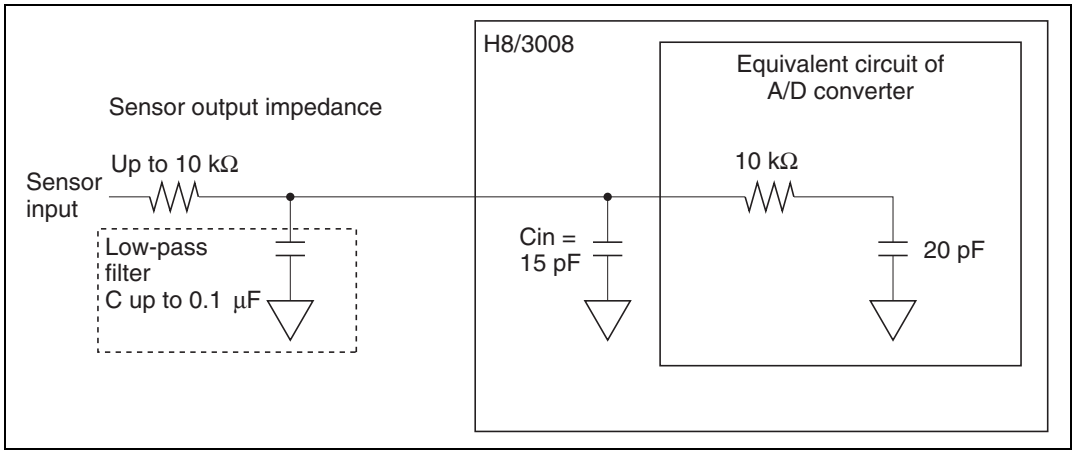

Figure 14.11 Analog Input Circuit (Example)

Section 15 D/A Converter

15.1 Overview

The H8/3008 includes a D/A converter with two channels.

15.1.1 Features

D/A converter features are listed below.

- Eight-bit resolution
- Two output channels
- Conversion time: maximum 10 μs (with 20-pF capacitive load)
- Output voltage: 0 V to V_{REF}
- D/A outputs can be sustained in software standby mode

15.1.2 Block Diagram

Figure 15.1 shows a block diagram of the D/A converter.

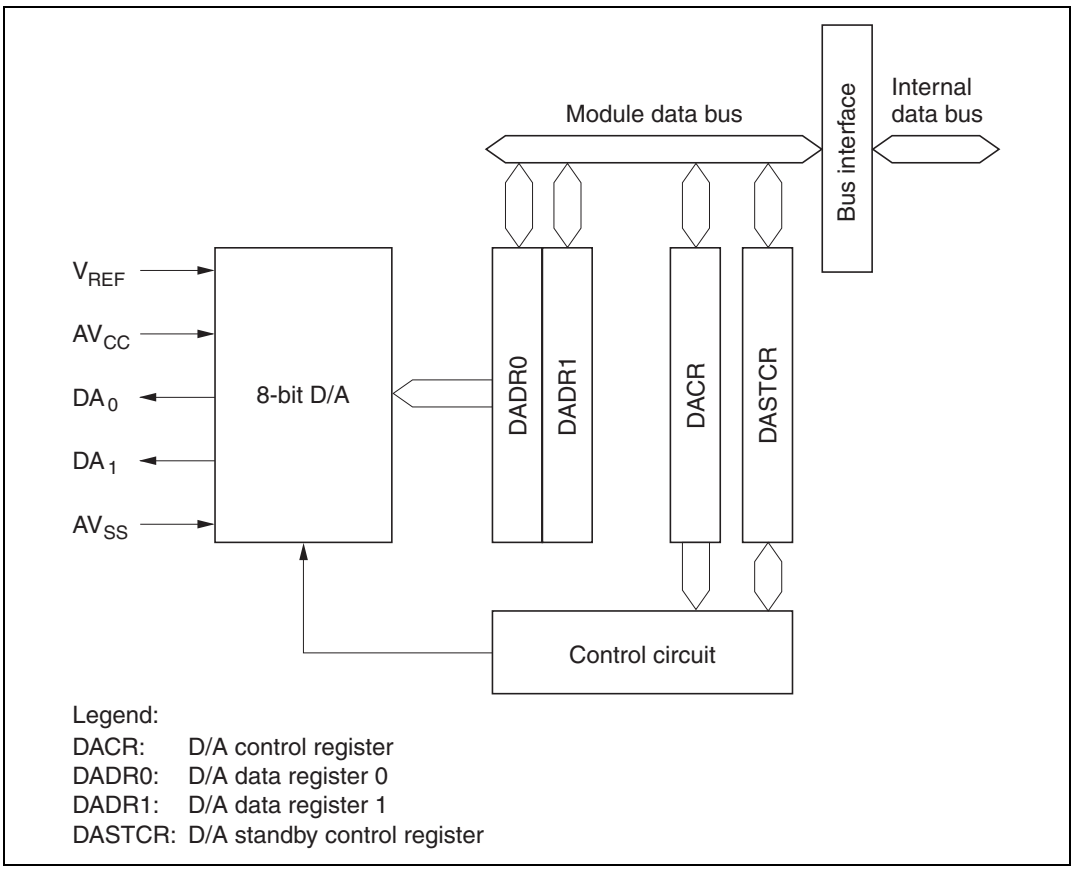

Figure 15.1 D/A Converter Block Diagram

15.1.3 Pin Configuration

Table 15.1 summarizes the D/A converter's input and output pins.

Table 15.1 D/A Converter Pins

Pin Name	Abbreviation	I/O	Function
Analog power supply pin	AV_{SS}	Input	Analog power supply and reference voltage
Analog ground pin	AV_{SS}	Input	Analog ground and reference voltage
Analog output pin 0	DA_0	Output	Analog output, channel 0
Analog output pin 1	DA_1	Output	Analog output, channel 1
Reference voltage input pin	V_{REF}	Input	Analog reference voltage

15.1.4 Register Configuration

Table 15.2 summarizes the D/A converter's registers.

Table 15.2 D/A Converter Registers

Address*	Name	Abbreviation	R/W	Initial Value
H'FFF9C	D/A data register 0	DADR0	R/W	H'00
H'FFF9D	D/A data register 1	DADR1	R/W	H'00
H'FFF9E	D/A control register	DACR	R/W	H'1F
H'EE01A	D/A standby control register	DASTCR	R/W	H'FE

Note: * Lower 20 bits of the address in advanced mode.

15.2 Register Descriptions

15.2.1 D/A Data Registers 0 and 1 (DADR0, DADR1)

Bit	7	6	5	4	3	2	1	0
Initial value	0	0	0	0	0	0	0	0
Read/Write	R/W	R/W	R/W	R/W	R/W	R/W	R/W	R/W

The D/A data registers (DADR0 and DADR1) are 8-bit readable/writable registers that store the data to be converted. When analog output is enabled, the D/A data register values are constantly converted and output at the analog output pins.

The D/A data registers are initialized to H'00 by a reset and in standby mode.

When the DASTE bit is set to 1 in the D/A standby control register (DASTCR), the D/A registers are not initialized in software standby mode.

15.2.2 D/A Control Register (DACR)

Bit	7	6	5	4	3	2	1	0
	DAOE1	DAOE0	DAE	—	—	—	—	—
Initial value	0	0	0	1	1	1	1	1
Read/Write	R/W	R/W	R/W	—	—	—	—	—

D/A enable
Controls D/A conversion

D/A output enable 0
Controls D/A conversion and analog output

D/A output enable 1
Controls D/A conversion and analog output

DACR is an 8-bit readable/writable register that controls the operation of the D/A converter. DACR is initialized to H'1F by a reset and in standby mode.

When the DASTE bit is set to 1 in the D/A standby control register (DASTCR), the D/A registers are not initialized in software standby mode.

Bit 7—D/A Output Enable 1 (DAOE1): Controls D/A conversion and analog output.

Bit 7 DAOE1	Description
0	DA_1 analog output is disabled
1	Channel-1 D/A conversion and DA_1 analog output are enabled

Bit 6—D/A Output Enable 0 (DAOE0): Controls D/A conversion and analog output.

Bit 6 DAOE0	Description
0	DA_0 analog output is disabled
1	Channel-0 D/A conversion and DA_0 analog output are enabled

Bit 5—D/A Enable (DAE): Controls D/A conversion, together with bits DAOE0 and DAOE1. When the DAE bit is cleared to 0, analog conversion is controlled independently in channels 0 and 1. When the DAE bit is set to 1, analog conversion is controlled together in channels 0 and 1. Output of the conversion results is always controlled independently by DAOE0 and DAOE1.

Bit 7 DAOE1	Bit 6 DAOE0	Bit 5 DAE	Description
0	0	—	D/A conversion is disabled in channels 0 and 1
0	1	0	D/A conversion is enabled in channel 0 D/A conversion is disabled in channel 1
0	1	1	D/A conversion is enabled in channels 0 and 1
1	0	0	D/A conversion is disabled in channel 0 D/A conversion is enabled in channel 1
1	0	1	D/A conversion is enabled in channels 0 and 1
1	1	—	D/A conversion is enabled in channels 0 and 1

When the DAE bit is set to 1, even if bits DAOE0 and DAOE1 in DACR and the ADST bit in ADCSR are cleared to 0, the same current is drawn from the analog power supply as during A/D and D/A conversion.

Bits 4 to 0—Reserved: These bits cannot be modified and are always read as 1.

15.2.3 D/A Standby Control Register (DASTCR)

DASTCR is an 8-bit readable/writable register that enables or disables D/A output in software standby mode.

Bit	7	6	5	4	3	2	1	0
	—	—	—	—	—	—	—	DASTE
Initial value	1	1	1	1	1	1	1	0
Read/Write	—	—	—	—	—	—	—	R/W

Reserved bits

D/A standby enable
Enables or disables D/A output in software standby mode

DASTCR is initialized to H'FE by a reset and in hardware standby mode. It is not initialized in software standby mode.

Bits 7 to 1—Reserved: These bits cannot be modified and are always read as 1.

Bit 0—D/A Standby Enable (DASTE): Enables or disables D/A output in software standby mode.

Bit 0 DASTE	Description	
0	D/A output is disabled in software standby mode	(Initial value)
1	D/A output is enabled in software standby mode	

15.3 Operation

The D/A converter has two built-in D/A conversion circuits that can perform conversion independently.

D/A conversion is performed constantly while enabled in DACR. If the DADR0 or DADR1 value is modified, conversion of the new data begins immediately. The conversion results are output when bits DAOE0 and DAOE1 are set to 1.

An example of D/A conversion on channel 0 is given next. Timing is indicated in figure 15.2.

1. Data to be converted is written in DADR0.
2. Bit DAOE0 is set to 1 in DACR. D/A conversion starts and DA_0 becomes an output pin. The converted result is output after the conversion time.

   The output value is $\frac{\text{DADR contents}}{256} \times V_{REF}$

   Output of this conversion result continues until the value in DADR0 is modified or the DAOE0 bit is cleared to 0.
3. If the DADR0 value is modified, conversion starts immediately, and the result is output after the conversion time.
4. When the DAOE0 bit is cleared to 0, DA0 becomes an input pin.

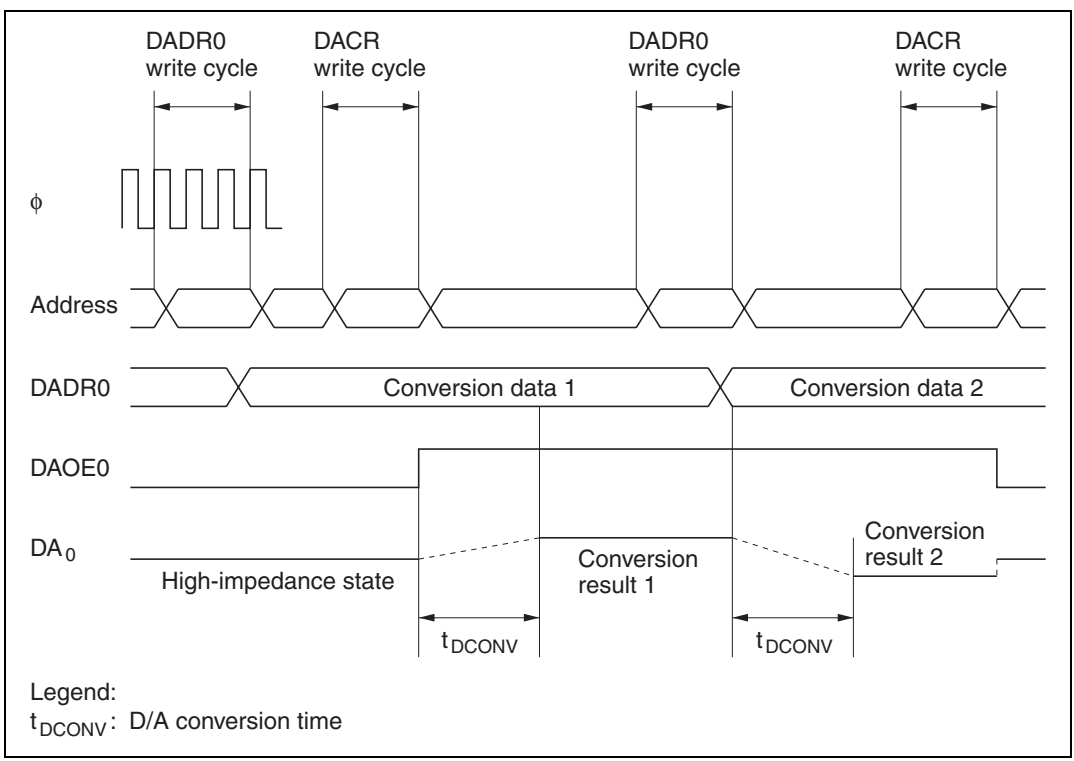

Figure 15.2 Example of D/A Converter Operation

15.4 D/A Output Control

In the H8/3008, D/A converter output can be enabled or disabled in software standby mode.

When the DASTE bit is set to 1 in DASTCR, D/A converter output is enabled in software standby mode. The D/A converter registers retain the values they held prior to the transition to software standby mode.

When D/A output is enabled in software standby mode, the reference supply current is the same as during normal operation.

Section 16 RAM

16.1 Overview

The H8/3008 has high-speed static RAM on-chip. The RAM is connected to the CPU by a 16-bit data bus. The CPU accesses both byte data and word data in two states, making the RAM useful for rapid data transfer.

The on-chip RAM can be enabled or disabled with the RAM enable bit (RAME) in the system control register (SYSCR). When the on-chip RAM is disabled, that area is assigned to external space in the expanded modes. The on-chip RAM specifications for the H8/3008 are shown in table 16.1.

Table 16.1 H8/3008 On-Chip RAM Specifications

RAM size		4 kbytes
Address assignment	Modes 1, 2	H'FEF20 to H'FFF1F
	Modes 3, 4	H'FFEF20 to H'FFFF1F

16.1.1 Block Diagram

Figure 16.1 shows a block diagram of the on-chip RAM.

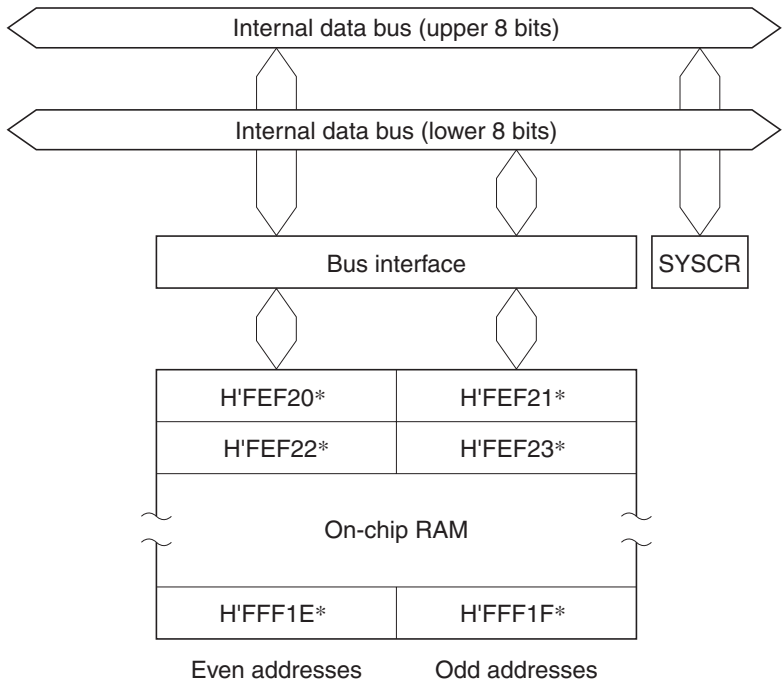

Legend:
SYSCR: System control register

Note: * The lower 20 bits of the address are shown.

Figure 16.1 RAM Block Diagram

16.1.2 Register Configuration

The on-chip RAM is controlled by SYSCR. Table 16.2 gives the address and initial value of SYSCR.

Table 16.2 System Control Register

Address*	Name	Abbreviation	R/W	Initial Value
H'EE012	System control register	SYSCR	R/W	H'09

Note: * Lower 20 bits of the address in advanced mode.

16.2 System Control Register (SYSCR)

Bit	7	6	5	4	3	2	1	0
	SSBY	STS2	STS1	STS0	UE	NMIEG	SSOE	RAME
Initial value	0	0	0	0	1	0	0	1
Read/Write	R/W	R/W	R/W	R/W	R/W	R/W	R/W	R/W

RAM enable bit
Enables or disables on-chip RAM

Software standby output port enable

NMI edge select

User bit enable

Standby timer select 2 to 0

Software standby

One function of SYSCR is to enable or disable access to the on-chip RAM. The on-chip RAM is enabled or disabled by the RAME bit in SYSCR. For details about the other bits, see section 3.3, System Control Register (SYSCR).

Bit 0—RAM Enable (RAME): Enables or disables the on-chip RAM. The RAME bit is initialized at the rising edge of the input at the $\overline{\text{RES}}$ pin. It is not initialized in software standby mode.

Bit 0 RAME	Description	
0	On-chip RAM is disabled	
1	On-chip RAM is enabled	(Initial value)

16.3 Operation

When the RAME bit is set to 1, the on-chip RAM is enabled. Accesses to the addresses shown in table 16.1 are directed to the on-chip RAM. In modes 1 to 4 (expanded modes), when the RAME bit is cleared to 0, the off-chip address space is accessed.

Since the on-chip RAM is connected to the CPU by an internal 16-bit data bus, it can be written and read by word access. It can also be written and read by byte access. Byte data is accessed in two states using the upper 8 bits of the data bus. Word data starting at an even address is accessed in two states using all 16 bits of the data bus.

Section 17 Clock Pulse Generator

17.1 Overview

The H8/3008 has a built-in clock pulse generator (CPG) that generates the system clock (ϕ) and other internal clock signals (ϕ/2 to ϕ/4096). After duty adjustment, a frequency divider divides the clock frequency to generate the system clock (ϕ). The system clock is output at the ϕ pin*[1] and furnished as a master clock to prescalers that supply clock signals to the on-chip supporting modules. Frequency division ratios of 1/1, 1/2, 1/4, and 1/8 can be selected for the frequency divider by settings in a division control register (DIVCR)*[2]. Power consumption in the chip is reduced in almost direct proportion to the frequency division ratio.

Notes: 1. Usage of the ϕ pin differs depending on the chip operating mode and the PSTOP bit setting in the module standby control register (MSTCR). For details, see section 18.7, System Clock Output Disabling Function.

2. The division ratio of the frequency divider can be changed dynamically during operation. The clock output at the ϕ pin also changes when the division ratio is changed. The frequency output at the ϕ pin is shown below.

$$\phi = \text{EXTAL} \times n$$

where, EXTAL: Frequency of crystal resonator or external clock signal

n: Frequency division ratio (n = 1/1, 1/2, 1/4, or 1/8)

17.1.1 Block Diagram

Figure 17.1 shows a block diagram of the clock pulse generator.

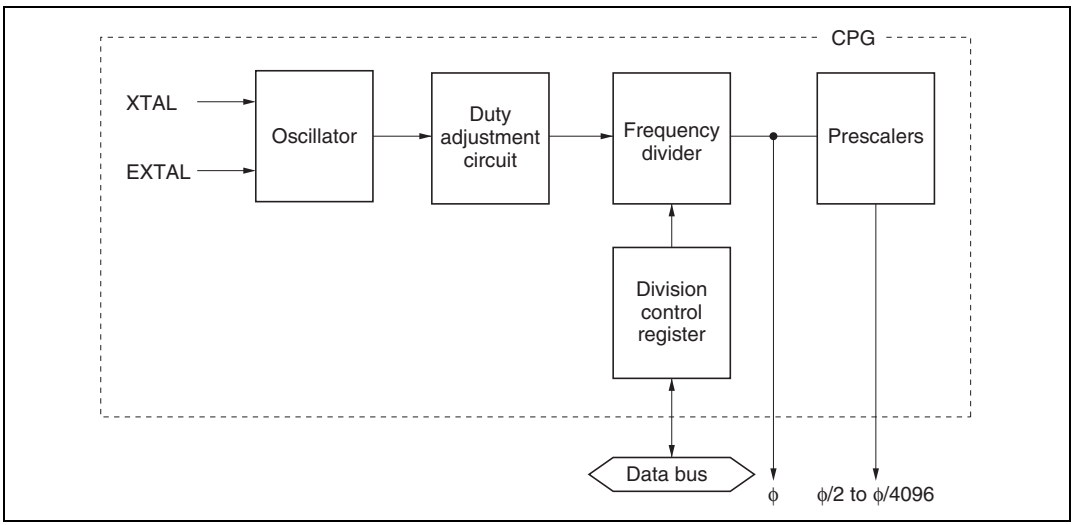

Figure 17.1 Block Diagram of Clock Pulse Generator

17.2 Oscillator Circuit

Clock pulses can be supplied by connecting a crystal resonator, or by input of an external clock signal.

17.2.1 Connecting a Crystal Resonator

Circuit Configuration: A crystal resonator can be connected as in the example in figure 17.2. Damping resistance Rd should be selected according to table 17.1 (1), and external capacitances C_{L1} and C_{L2} according to table 17.1 (2). An AT-cut parallel-resonance crystal should be used.

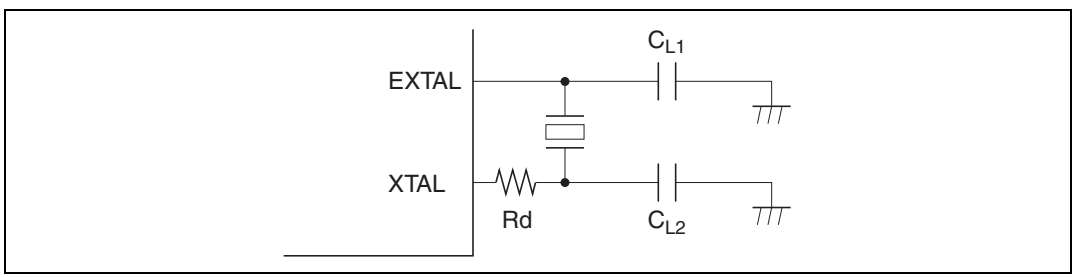

Figure 17.2 Connection of Crystal Resonator (Example)

If a crystal resonator with a frequency higher than 20 MHz is connected, the external load capacitance values in table 17.1 (2) should not exceed 10 [pF]. Also, in order to improve the accuracy of the oscillation frequency, a thorough study of oscillation matching evaluation, etc., should be carried out when deciding the circuit constants.

Table 17.1 (1) Damping Resistance Value

Damping Resistance Value	Frequency f (MHz)							
	2	2 < f ≤ 4	4 < f ≤8	8 < f ≤ 10	10 < f ≤ 13	13 < f ≤ 16	16 < f ≤ 18	18 < f ≤ 25
Rd (Ω)	1 k	500	200	0	0	0	0	0

Note: A crystal resonator between 2 MHz and 25 MHz can be used. If the chip is to be operated at less than 2 MHz, the on-chip frequency divider should be used. (A crystal resonator of less than 2 MHz cannot be used.)

Table 17.1 (2) External Capacitance Values

External Capacitance Value	5 V Version		3 V Version	
Frequency f (MHz)	**20 < f ≤ 25**	**2 ≤ f ≤ 20**	**2 ≤ f ≤ 16**	**16 ≤ f ≤ 25**
$C_{L1} = C_{L2}$ (pF)	10	10 to 22	22	10

Crystal Resonator: Figure 17.3 shows an equivalent circuit of the crystal resonator. The crystal resonator should have the characteristics listed in table 17.2.

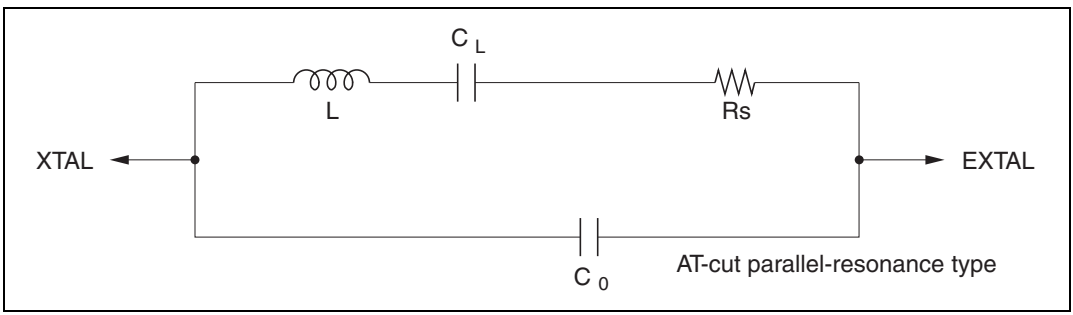

Figure 17.3 Crystal Resonator Equivalent Circuit

Table 17.2 Crystal Resonator Parameters

Frequency (MHz)	2	4	8	10	12	16	18	20	25
Rs max (Ω)	500	120	80	70	60	50	40	40	40
Co (pF)	7 pF max								

Use a crystal resonator with a frequency equal to the system clock frequency (ϕ).

Notes on Board Design: When a crystal resonator is connected, the following points should be noted:

Other signal lines should be routed away from the oscillator circuit to prevent induction from interfering with correct oscillation. See figure 17.4.

When the board is designed, the crystal resonator and its load capacitors should be placed as close as possible to the XTAL and EXTAL pins.

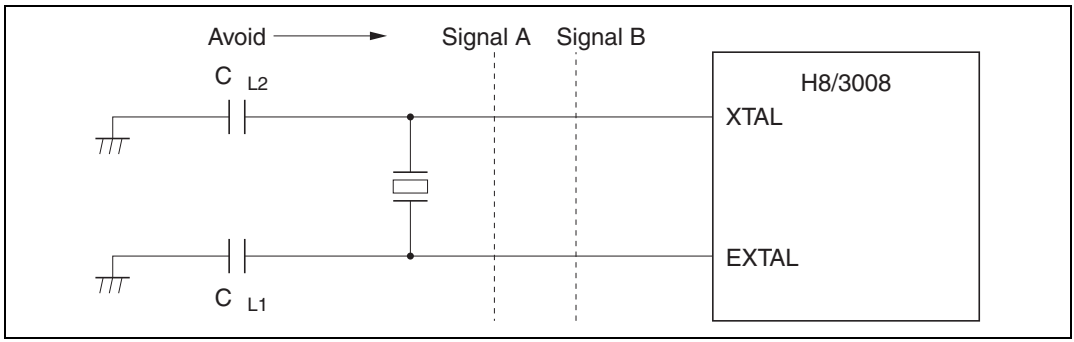

Figure 17.4 Oscillator Circuit Block Board Design Precautions

17.2.2 External Clock Input

Circuit Configuration: An external clock signal can be input as shown in the examples in figure 17.5. If the XTAL pin is left open, the stray capacitance should not exceed 10 pF. If the stray capacitance at the XTAL pin exceeds 10 pF in configuration a, use the connection shown in configuration b instead, and hold the external clock high in standby mode.

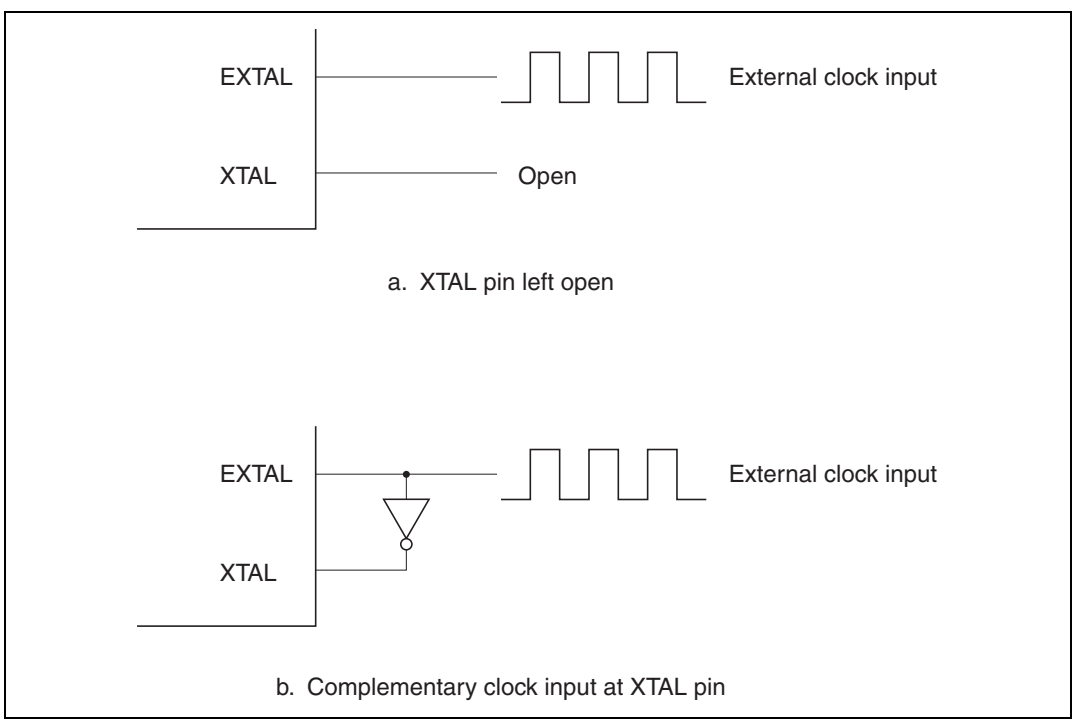

Figure 17.5 External Clock Input (Examples)

External Clock: The external clock frequency should be equal to the system clock frequency when not divided by the on-chip frequency divider. Table 17.3 shows the clock timing, figure 17.6 shows the external clock input timing, and figure 17.7 shows the external clock output settling delay timing. When the appropriate external clock is input via the EXTAL pin, its waveform is corrected by the on-chip oscillator and duty adjustment circuit.

When the appropriate external clock is input via the EXTAL pin, its waveform is corrected by the on-chip oscillator and duty adjustment circuit. The resulting stable clock is output to external devices after the external clock settling time (t_{DEXT}) has passed after the clock input. The system must remain reset with the reset signal low during t_{DEXT}, while the clock output is unstable.

Table 17.3 Clock Timing (Preliminary)

		V_{cc} = 3.0 V to 3.6 V		V_{cc} = 5.0 V ±10 %				
Item	**Symbol**	**Min**	**Max**	**Min**	**Max**	**Unit**	**Test Conditions**	
External clock input low pulse width	t_{EXL}	15	—	15	—	ns	Figure 17.6	
External clock input high pulse width	t_{EXH}	15	—	15	—	ns		
External clock rise time	t_{EXr}	—	5	—	5	ns		
External clock fall time	t_{EXf}	—	5	—	5	ns		
Clock low pulse width	t_{CL}	0.4	0.6	0.4	0.6	t_{cyc}	$\phi \geq 5$ MHz	Figure 19.7
		80	—	80	—	ns	$\phi < 5$ MHz	
Clock high pulse width	t_{CH}	0.4	0.6	0.4	0.6	t_{cyc}	$\phi \geq 5$ MHz	
		80	—	80	—	ns	$\phi < 5$ MHz	
External clock output settling delay time	t_{DEXT}*	500	—	500	—	μs	Figure 17.7	

Note: * t_{DEXT} includes a $\overline{RES}$ pulse width (t_{RESW}). $t_{RESW} = 20\ t_{cyc}$

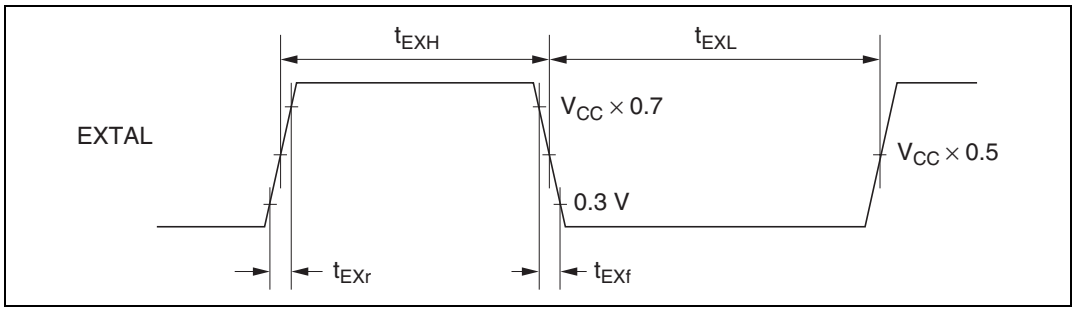

Figure 17.6 External Clock Input Timing

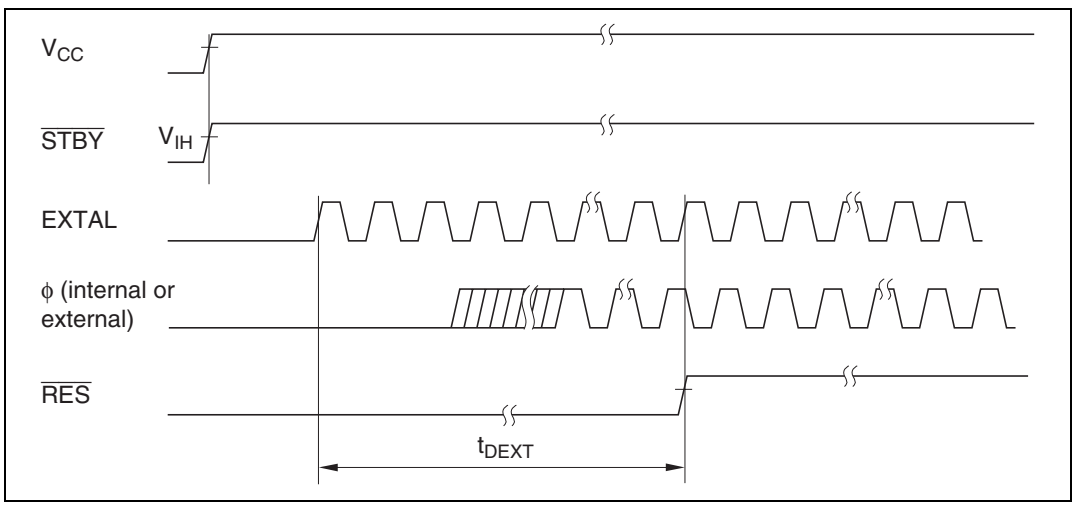

Figure 17.7 External Clock Output Settling Delay Timing

17.3 Duty Adjustment Circuit

When the oscillator frequency is 5 MHz or higher, the duty adjustment circuit adjusts the duty cycle of the clock signal from the oscillator to generate ϕ.

17.4 Prescalers

The prescalers divide the system clock (ϕ) to generate internal clocks (ϕ/2 to ϕ/4096).

17.5 Frequency Divider

The frequency divider divides the duty-adjusted clock signal to generate the system clock (ϕ). The frequency division ratio can be changed dynamically by modifying the value in DIVCR, as described below. Power consumption in the chip is reduced in almost direct proportion to the frequency division ratio. The system clock generated by the frequency divider can be output at the ϕ pin.

17.5.1 Register Configuration

Table 17.4 summarizes the frequency division register.

Table 17.4 Frequency Division Register

Address*	Name	Abbreviation	R/W	Initial Value
H'EE01B	Division control register	DIVCR	R/W	H'FC

Note: * Lower 20 bits of the address in advanced mode.

17.5.2 Division Control Register (DIVCR)

DIVCR is an 8-bit readable/writable register that selects the division ratio of the frequency divider.

Bit	7	6	5	4	3	2	1	0
	—	—	—	—	—	—	DIV1	DIV0
Initial value	1	1	1	1	1	1	0	0
Read/Write	—	—	—	—	—	—	R/W	R/W

Reserved bits

Divide bits 1 and 0
These bits select the frequency division ratio

DIVCR is initialized to H'FC by a reset and in hardware standby mode. It is not initialized in software standby mode.

Bits 7 to 2—Reserved: These bits cannot be modified and are always read as 1.

Bits 1 and 0—Divide (DIV1, DIV0): These bits select the frequency division ratio, as follows.

Bit 1 DIV1	Bit 0 DIV0	Frequency Division Ratio	
0	0	1/1	(Initial value)
0	1	1/2	
1	0	1/4	
1	1	1/8	

17.5.3 Usage Notes

The DIVCR setting changes the ϕ frequency, so note the following points.

- Select a frequency division ratio that stays within the assured operation range specified for the clock cycle time t_{cyc} in the AC electrical characteristics. Note that ϕ_{min} = lower limit of the operating frequency range. Ensure that ϕ is not below this lower limit.
- All on-chip module operations are based on ϕ. Note that the timing of timer operations, serial communication, and other time-dependent processing differs before and after any change in the division ratio. The waiting time for exit from software standby mode also changes when the division ratio is changed. For details, see section 18.4.3, Selection of Waiting Time for Exit from Software Standby Mode.

Section 18 Power-Down State

18.1 Overview

The H8/3008 has a power-down state that greatly reduces power consumption by halting the CPU, and a module standby function that reduces power consumption by selectively halting on-chip modules.

The power-down state includes the following three modes:

- Sleep mode
- Software standby mode
- Hardware standby mode

The module standby function can halt on-chip supporting modules independently of the power-down state. The modules that can be halted are the 16-bit timer, 8-bit timer, SCI0, SCI1, and A/D converter.

Table 18.1 indicates the methods of entering and exiting the power-down modes and module standby mode, and gives the status of the CPU and on-chip supporting modules in each mode.

Table 18.1 Power-Down State and Module Standby Function

Mode	Entering Conditions	State: Clock	CPU	CPU Registers	16-Bit Timer	8-Bit Timer	SCI0	SCI1	A/D	Other Modules	RAM	ϕ clock Output*3	I/O Ports	Exiting Conditions
Sleep mode	SLEEP instruction executed while SSBY = 0 in SYSCR	Active	Halted	Held	Active	Active	Active	Active	Active	Active	Held	ϕ output	Held	• Interrupt • $\overline{RES}$ • $\overline{STBY}$
Software standby mode	SLEEP instruction executed while SSBY = 1 in SYSCR	Halted	Halted	Held	Halted and reset	Halted and reset	Halted and reset	Halted and reset	Halted and reset	Halted and reset	Held	High output	Held	• NMI • $\overline{IRQ_0}$ to $\overline{IRQ_2}$ • $\overline{RES}$ • $\overline{STBY}$
Hardware standby mode	Low input at $\overline{STBY}$ pin	Halted	Halted	Undetermined	Halted and reset	Halted and reset	Halted and reset	Halted and reset	Halted and reset	Halted and reset	Held*2	High impedance	High impedance	• $\overline{STBY}$ • $\overline{RES}$
Module standby	Corresponding bit set to 1 in MSTCRH and MSTCRL	Active	Active	—	Halted*1 and reset	Halted*1 and reset	Halted*1 and reset	Halted*1 and reset	Halted*1 and reset	Active	—	High impedance*1	—	• $\overline{STBY}$ • $\overline{RES}$ • Clear MSTCR bit to 0*4

Notes: 1. State in which the corresponding MSTCR bit was set to 1. For details see section 18.2.2, Module Standby Control Register H (MSTCRH) and section 18.2.3, Module Standby Control Register L (MSTCRL).
2. The RAME bit must be cleared to 0 in SYSCR before the transition from the program execution state to hardware standby mode.
3. When $P6_7$ is used as the ϕ output pin.
4. When a MSTCR bit is set to 1, the registers of the corresponding on-chip supporting module are initialized. To restart the module, first clear the MSTCR bit to 0, then set up the module registers again.

Legend:
SYSCR: System control register
SSBY: Software standby bit
MSTCRH: Module standby control register H
MSTCRL: Module standby control register L

18.2 Register Configuration

The H8/3008 has a system control register (SYSCR) that controls the power-down state, and module standby control registers H (MSTCRH) and L (MSTCRL) that control the module standby function. Table 18.2 summarizes these registers.

Table 18.2 Control Register

Address*	Name	Abbreviation	R/W	Initial Value
H'EE012	System control register	SYSCR	R/W	H'09
H'EE01C	Module standby control register H	MSTCRH	R/W	H'78
H'EE01D	Module standby control register L	MSTCRL	R/W	H'00

Note: * Lower 20 bits of the address in advanced mode.

18.2.1 System Control Register (SYSCR)

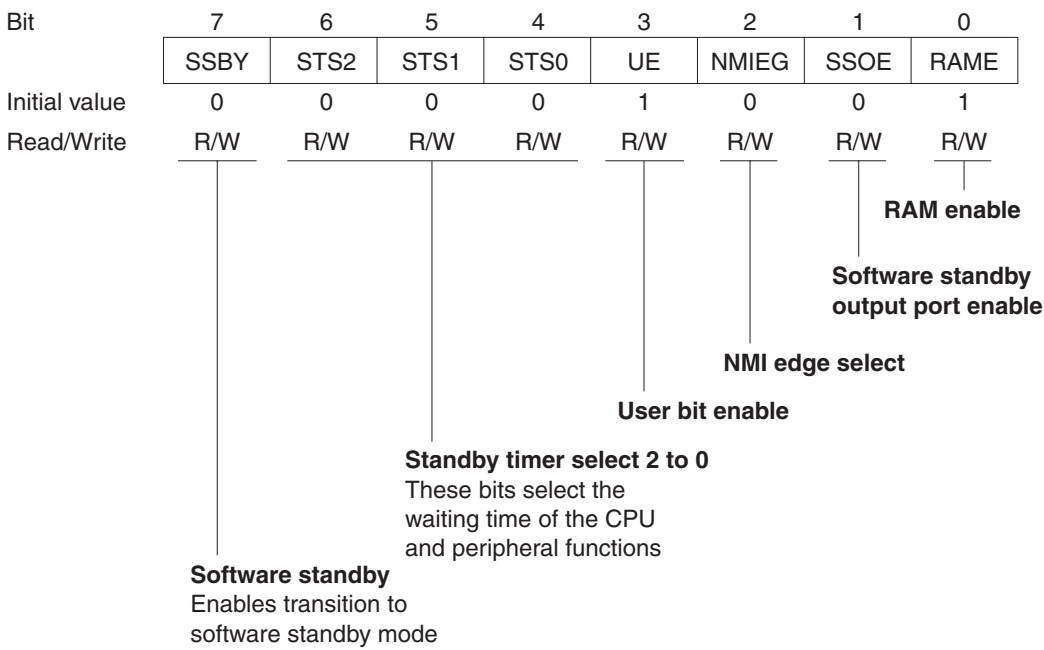

SYSCR is an 8-bit readable/writable register. Bit 7 (SSBY), bits 6 to 4 (STS2 to STS0), and bit 1 (SSOE) control the power-down state. For information on the other SYSCR bits, see section 3.3, System Control Register (SYSCR).

Bit 7—Software Standby (SSBY): Enables transition to software standby mode. When software standby mode is exited by an external interrupt, this bit remains set to 1 after the return to normal operation. To clear this bit, write 0.

Bit 7 SSBY	Description	
0	SLEEP instruction causes transition to sleep mode	(Initial value)
1	SLEEP instruction causes transition to software standby mode	

Bits 6 to 4—Standby Timer Select (STS2 to STS0): These bits select the length of time the CPU and on-chip supporting modules wait for the clock to settle when software standby mode is exited by an external interrupt. If the clock is generated by a crystal resonator, set these bits according to the clock frequency so that the waiting time will be at least 7 ms. See table 18.3. Set these bits according to the operating frequency so that the waiting time will be at least 100 μs.

Bit 6 STS2	Bit 5 STS1	Bit 4 STS0	Description	
0	0	0	Waiting time = 8,192 states	(Initial value)
		1	Waiting time = 16,384 states	
	1	0	Waiting time = 32,768 states	
		1	Waiting time = 65,536 states	
1	0	0	Waiting time = 131,072 states	
1	0	1	Waiting time = 262,144 states	
1	1	0	Waiting time = 1,024 states	
1	1	1	Illegal setting	

Bit 1—Software Standby Output Port Enable (SSOE): Specifies whether the address bus and bus control signals ($\overline{CS}_0$ to $\overline{CS}_7$, $\overline{AS}$, $\overline{RD}$, $\overline{HWR}$, and $\overline{LWR}$) are kept as outputs or fixed high, or placed in the high-impedance state in software standby mode.

Bit 1 SSOE	Description	
0	In software standby mode, the address bus and bus control signals are all high-impedance	(Initial value)
1	In software standby mode, the address bus retains its output state and bus control signals are fixed high	

18.2.2 Module Standby Control Register H (MSTCRH)

MSTCRH is an 8-bit readable/writable register that controls output of the system clock (ϕ). It also controls the module standby function, which places individual on-chip supporting modules in the standby state. Module standby can be designated for the SCI0, SCI1.

Bit	7	6	5	4	3	2	1	0
	PSTOP	—	—	—	—	—	MSTPH1	MSTPH0
Initial value	0	1	1	1	1	0	0	0
Read/Write	R/W	—	—	—	—	R/W	R/W	R/W

Reserved bits

Module standby H1 to H0
These bits select modules to be placed in standby

ϕ clock stop
Enables or disables output of the system clock

MSTCRH is initialized to H'78 by a reset and in hardware standby mode. It is not initialized in software standby mode.

Bit 7—ϕ Clock Stop (PSTOP): Enables or disables output of the system clock (ϕ).

Bit 7 PSTOP	Description	
0	System clock output is enabled	(Initial value)
1	System clock output is disabled	

Bits 6 to 3—Reserved: These bits cannot be modified and are always read as 1.

Bit 2—Reserved: This bit can be written and read.

Bit 1—Module Standby H1 (MSTPH1): Selects whether to place the SCI1 in standby.

Bit 1 MSTPH1	Description	
0	SCI1 operates normally	(Initial value)
1	SCI1 is in standby state	

Bit 0—Module Standby H0 (MSTPH0): Selects whether to place the SCI0 in standby.

Bit 0 MSTPH0	Description	
0	SCI0 operates normally	(Initial value)
1	SCI0 is in standby state	

18.2.3 Module Standby Control Register L (MSTCRL)

MSTCRL is an 8-bit readable/writable register that controls the module standby function, which places individual on-chip supporting modules in the standby state. Module standby can be designated for 16-bit timer, 8-bit timer, and A/D converter modules.

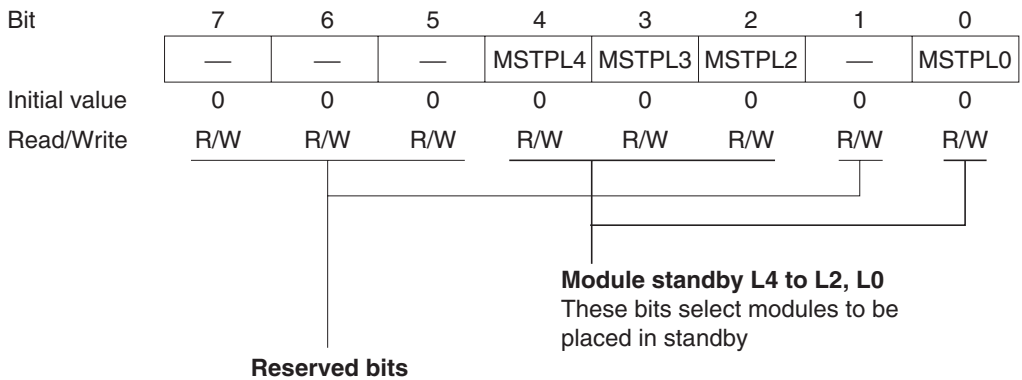

MSTCRL is initialized to H'00 by a reset and in hardware standby mode. It is not initialized in software standby mode.

Bits 7 to 5—Reserved: This bit can be written and read.

Bit 4—Module Standby L4 (MSTPL4): Selects whether to place the 16-bit timer in standby.

Bit 4 MSTPL4	Description	
0	16-bit timer operates normally	(Initial value)
1	16-bit timer is in standby state	

Bit 3—Module Standby L3 (MSTPL3): Selects whether to place 8-bit timer channels 0 and 1 in standby.

Bit 3 MSTPL3	Description	
0	8-bit timer channels 0 and 1 operate normally	(Initial value)
1	8-bit timer channels 0 and 1 are in standby state	

Bit 2—Module Standby L2 (MSTPL2): Selects whether to place 8-bit timer channels 2 and 3 in standby.

Bit 2 MSTPL2	Description	
0	8-bit timer channels 2 and 3 operate normally	(Initial value)
1	8-bit timer channels 2 and 3 are in standby state	

Bit 1—Reserved: This bit can be written and read.

Bit 0—Module Standby L0 (MSTPL0): Selects whether to place the A/D converter in standby.

Bit 0 MSTPL0	Description	
0	A/D converter operates normally	(Initial value)
1	A/D converter is in standby state	

18.3 Sleep Mode

18.3.1 Transition to Sleep Mode

When the SSBY bit is cleared to 0 in SYSCR, execution of the SLEEP instruction causes a transition from the program execution state to sleep mode. Immediately after executing the SLEEP instruction the CPU halts, but the contents of its internal registers are retained. On-chip supporting modules do not halt in sleep mode. Modules which have been placed in standby by the module standby function, however, remain halted.

18.3.2 Exit from Sleep Mode

Sleep mode is exited by an interrupt, or by input at the $\overline{\text{RES}}$ or $\overline{\text{STBY}}$ pin.

Exit by Interrupt: An interrupt terminates sleep mode and causes a transition to the interrupt exception handling state. Sleep mode is not exited by an interrupt source in an on-chip supporting module if the interrupt is disabled in the on-chip supporting module. Sleep mode is not exited by an interrupt other than NMI if the interrupt is masked by interrupt priority settings and the settings of the I and UI bits in CCR, IPR.

Exit by $\overline{\text{RES}}$ Input: Low input at the $\overline{\text{RES}}$ pin exits from sleep mode to the reset state.

Exit by $\overline{\text{STBY}}$ Input: Low input at the $\overline{\text{STBY}}$ pin exits from sleep mode to hardware standby mode.

18.4 Software Standby Mode

18.4.1 Transition to Software Standby Mode

To enter software standby mode, execute the SLEEP instruction while the SSBY bit is set to 1 in SYSCR.

In software standby mode, current dissipation is reduced to an extremely low level because the CPU, clock, and on-chip supporting modules all halt. On-chip supporting modules are reset and halted. As long as the specified voltage is supplied, however, CPU register contents and on-chip RAM data are retained. The settings of the I/O ports also held. When the WDT is used as a watchdog timer (WT/$\overline{\text{IT}}$ = 1), the TME bit must be cleared to 0 before setting SSBY. Also, when setting TME to 1, SSBY should be cleared to 0.

Clear the BRLE bit in BRCR (inhibiting bus release) before making a transition to software standby mode.

18.4.2 Exit from Software Standby Mode

Software standby mode can be exited by input of an external interrupt at the NMI, $\overline{IRQ_0}$, $\overline{IRQ_1}$, or $\overline{IRQ_2}$ pin, or by input at the $\overline{RES}$ or $\overline{STBY}$ pin.

Exit by Interrupt: When an NMI, IRQ_0, IRQ_1, or IRQ_2 interrupt request signal is received, the clock oscillator begins operating. After the oscillator settling time selected by bits STS2 to STS0 in SYSCR, stable clock signals are supplied to the entire chip, software standby mode ends, and interrupt exception handling begins. Software standby mode is not exited if the interrupt enable bits of interrupts IRQ_0, IRQ_1, and IRQ_2 are cleared to 0, or if these interrupts are masked in the CPU.

Exit by $\overline{RES}$ Input: When the $\overline{RES}$ input goes low, the clock oscillator starts and clock pulses are supplied immediately to the entire chip. The $\overline{RES}$ signal must be held low long enough for the clock oscillator to stabilize. When $\overline{RES}$ goes high, the CPU starts reset exception handling.

Exit by $\overline{STBY}$ Input: Low input at the $\overline{STBY}$ pin causes a transition to hardware standby mode.

18.4.3 Selection of Waiting Time for Exit from Software Standby Mode

Bits STS2 to STS0 in SYSCR and bits DIV1 and DIV0 in DIVCR should be set as follows.

Crystal Resonator: Set STS2 to STS0, DIV1, and DIV0 so that the waiting time (for the clock to stabilize) is at least 7 ms. Table 18.3 indicates the waiting times that are selected by STS2 to STS0, DIV1, and DIV0 settings at various system clock frequencies.

When Using an External Clock: Set the STS2 to STS0, DIV0, and DIV1 bits so that the waiting time is at least 100 μs.

Table 18.3 Clock Frequency and Waiting Time for Clock to Settle

DIV1	DIV0	STS2	STS1	STS0	Waiting Time	25 MHz	20 MHz	18 MHz	16 MHz	12 MHz	10 MHz	8 MHz	6 MHz	4 MHz	2 MHz	1MHz	Unit
0	0	0	0	0	8192 states	0.3	0.4	0.46	0.51	0.65	0.8	1.0	1.3	2.0	4.1	8.2*	ms
		0	0	1	16384 states	0.7	0.8	0.91	1.0	1.3	1.6	2.0	2.7	4.1	8.2*	16.4	
		0	1	0	32768 states	1.3	1.6	1.8	2.0	2.7	3.3	4.1	5.5	8.2*	16.4	32.8	
		0	1	1	65536 states	2.6	3.3	3.6	4.1	5.5	6.6	8.2*	10.9*	16.4	32.8	65.5	
		1	0	0	131072 states	5.2	6.6	7.3*	8.2*	10.9*	13.1*	16.4	21.8	32.8	65.5	131.1	
		1	0	1	262144 states	10.5*	13.1*	14.6	16.4	21.8	26.2	32.8	43.7	65.5	131.1	262.1	
		1	1	0	1024 states	0.04	0.05	0.057	0.064	0.085	0.10	0.13	0.17	0.26	0.51	1.0	
		1	1	1						Illegal setting							
0	1	0	0	0	8192 states	0.7	0.8	0.91	1.02	1.4	1.6	2.0	2.7	4.1	8.2*	16.4*	ms
		0	0	1	16384 states	1.3	1.6	1.8	2.0	2.7	3.3	4.1	5.5	8.2*	16.4	32.8	
		0	1	0	32768 states	2.6	3.3	3.6	4.1	5.5	6.6	8.2*	10.9*	16.4	32.8	65.5	
		0	1	1	65536 states	5.2	6.6	7.3*	8.2*	10.9*	13.1*	16.4	21.8	32.8	65.5	131.1	
		1	0	0	131072 states	10.5*	13.1*	14.6	16.4	21.8	26.2	32.8	43.7	65.5	131.1	262.1	
		1	0	1	262144 states	21.0	26.2	29.1	32.8	43.7	52.4	65.5	87.4	131.1	262.1	524.3	
		1	1	0	1024 states	0.08	0.10	0.11	0.13	0.17	0.20	0.26	0.34	0.51	1.0	2.0	
		1	1	1						Illegal setting							
1	0	0	0	0	8192 states	1.3	1.6	1.8	2.0	2.7	3.3	4.1	5.5	8.2*	16.4*	32.8*	ms
		0	0	1	16384 states	2.6	3.3	3.6	4.1	5.5	6.6	8.2*	10.9*	16.4	32.8	65.5	
		0	1	0	32768 states	5.2	6.6	7.3*	8.2*	10.9*	13.1*	16.4	21.8	32.8	65.5	131.1	
		0	1	1	65536 states	10.5*	13.1*	14.6	16.4	21.8	26.2	32.8	43.7	65.5	131.1	262.1	
		1	0	0	131072 states	21.0	26.2	29.1	32.8	43.7	52.4	65.5	87.4	131.1	262.1	524.3	
		1	0	1	262144 states	41.9	52.4	58.3	65.5	87.4	104.9	131.1	174.8	262.1	524.3	1048.6	
		1	1	0	1024 states	0.16	0.20	0.23	0.26	0.34	0.41	0.51	0.68	1.02	2.0	4.1	
		1	1	1						Illegal setting							
1	1	0	0	0	8192 states	2.6	3.3	3.6	4.1	5.5	6.6	8.2*	10.9*	16.4*	32.8*	65.5	ms
		0	0	1	16384 states	5.2	6.6	7.3*	8.2*	10.9*	13.1*	16.4	21.8	32.8	65.5	131.1	
		0	1	0	32768 states	10.5*	13.1	14.6	16.4	21.8	26.2	32.8	43.7	65.5	131.1	262.1	
		0	1	1	65536 states	21.0	26.2	29.1	32.8	43.7	52.4	65.5	87.4	131.1	262.1	524.3	
		1	0	0	131072 states	41.9	52.4	58.3	65.5	87.4	104.9	131.1	174.8	262.1	524.3	1048.6	
		1	0	1	262144 states	83.9	104.9	116.5	131.1	174.8	209.7	262.1	349.5	524.3	1048.6	2097.1	
		1	1	0	1024 states	0.33	0.41	0.46	0.51	0.68	0.82	1.0	1.4	2.0	4.1	8.2*	
		1	1	1						Illegal setting							

Note: * Recommended setting

18.4.4 Sample Application of Software Standby Mode

Figure 18.1 shows an example in which software standby mode is entered at the fall of NMI and exited at the rise of NMI.

With the NMI edge select bit (NMIEG) cleared to 0 in SYSCR (selecting the falling edge), an NMI interrupt occurs. Next the NMIEG bit is set to 1 (selecting the rising edge) and the SSBY bit is set to 1; then the SLEEP instruction is executed to enter software standby mode.

Software standby mode is exited at the next rising edge of the NMI signal.

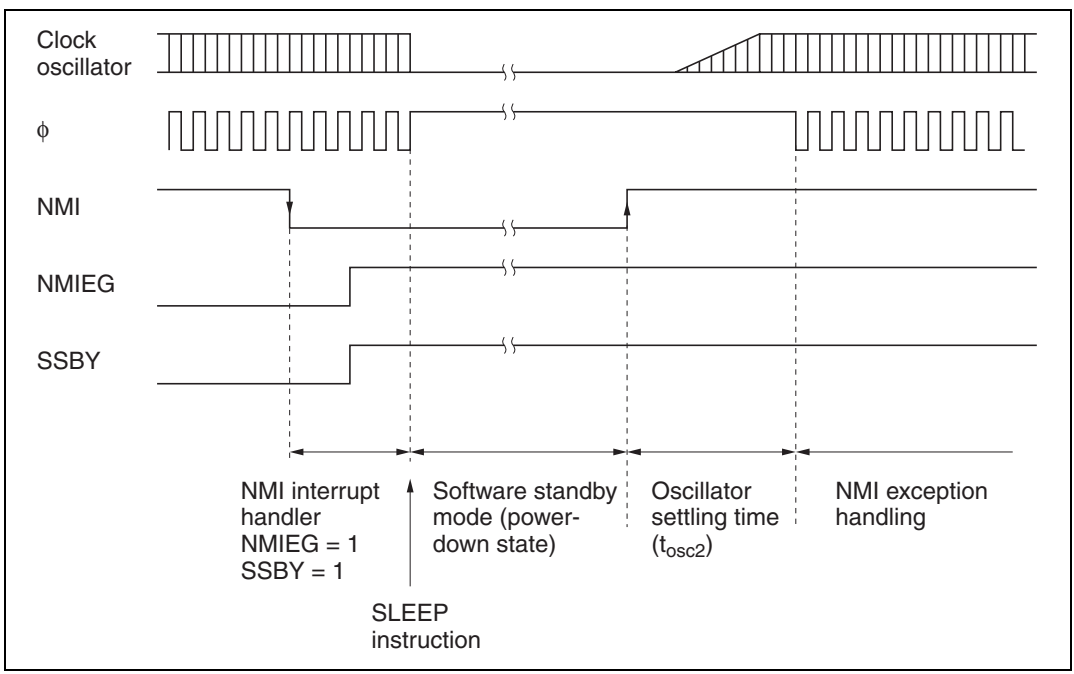

Figure 18.1 NMI Timing for Software Standby Mode (Example)

18.4.5 Note

The I/O ports retain their existing states in software standby mode. If a port is in the high output state, its output current is not reduced.

18.5 Hardware Standby Mode

18.5.1 Transition to Hardware Standby Mode

Regardless of its current state, the chip enters hardware standby mode whenever the $\overline{\text{STBY}}$ pin goes low. Hardware standby mode reduces power consumption drastically by halting all functions of the CPU, and on-chip supporting modules. All modules are reset except the on-chip RAM. As long as the specified voltage is supplied, on-chip RAM data is retained. I/O ports are placed in the high-impedance state.

Clear the RAME bit to 0 in SYSCR before $\overline{\text{STBY}}$ goes low to retain on-chip RAM data.

The inputs at the mode pins (MD2 to MD0) should not be changed during hardware standby mode.

18.5.2 Exit from Hardware Standby Mode

Hardware standby mode is exited by inputs at the $\overline{\text{STBY}}$ and $\overline{\text{RES}}$ pins. While $\overline{\text{RES}}$ is low, when $\overline{\text{STBY}}$ goes high, the clock oscillator starts running. $\overline{\text{RES}}$ should be held low long enough for the clock oscillator to settle. When $\overline{\text{RES}}$ goes high, reset exception handling begins, followed by a transition to the program execution state.

18.5.3 Timing for Hardware Standby Mode

Figure 18.2 shows the timing relationships for hardware standby mode. To enter hardware standby mode, first drive $\overline{\text{RES}}$ low, then drive $\overline{\text{STBY}}$ low. To exit hardware standby mode, first drive $\overline{\text{STBY}}$ high, wait for the clock to settle, then bring $\overline{\text{RES}}$ from low to high.

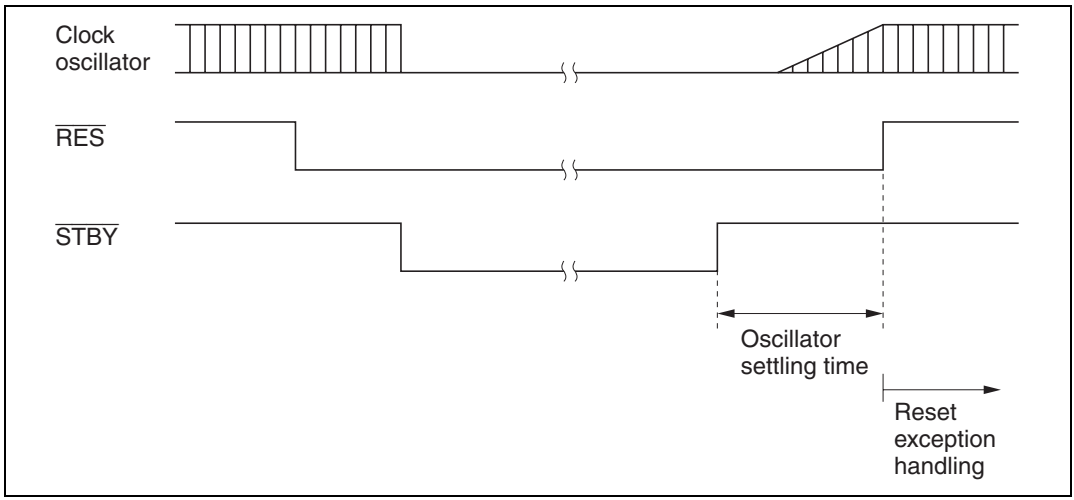

Figure 18.2 Hardware Standby Mode Timing

18.6 Module Standby Function

18.6.1 Module Standby Timing

The module standby function can halt several of the on-chip supporting modules (SCI1, SCI0, 16-bit timer, 8-bit timer, and A/D converter) independently in the power-down state. This standby function is controlled by bits MSTPH2 to MSTPH0 in MSTCRH and bits MSTPL7 to MSTPL0 in MSTCRL. When one of these bits is set to 1, the corresponding on-chip supporting module is placed in standby and halts at the beginning of the next bus cycle after the MSTCR write cycle.

18.6.2 Read/Write in Module Standby

When an on-chip supporting module is in module standby, read/write access to its registers is disabled. Read access always results in H'FF data. Write access is ignored.

18.6.3 Usage Notes

When using the module standby function, note the following points.

On-chip Supporting Module Interrupts: Before setting a module standby bit, first disable interrupts by that module. When an on-chip supporting module is placed in standby by the module standby function, its registers are initialized, including registers with interrupt request flags.

Pin States: Pins used by an on-chip supporting module lose their module functions when the module is placed in module standby. What happens after that depends on the particular pin. For details, see section 7, I/O Ports. Pins that change from the input to the output state require special care. For example, if SCI1 is placed in module standby, the receive data pin loses its receive data

function and becomes a port pin. If its port DDR bit is set to 1, the pin becomes a data output pin, and its output may collide with external SCI transmit data. Data collision should be prevented by clearing the port DDR bit to 0 or taking other appropriate action.

Register Resetting: When an on-chip supporting module is halted by the module standby function, all its registers are initialized. To restart the module, after its MSTCR bit is cleared to 0, its registers must be set up again. It is not possible to write to the registers while the MSTCR bit is set to 1.

18.7 System Clock Output Disabling Function

Output of the system clock (ϕ) can be controlled by the PSTOP bit in MSTCRH. When the PSTOP bit is set to 1, output of the system clock halts and the ϕ pin is placed in the high-impedance state. Figure 18.3 shows the timing of the stopping and starting of system clock output. When the PSTOP bit is cleared to 0, output of the system clock is enabled. Table 18.4 indicates the state of the ϕ pin in various operating states.

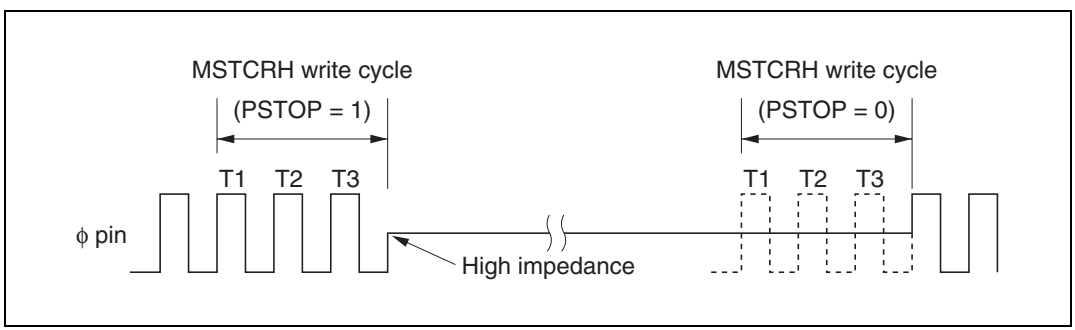

Figure 18.3 Starting and Stopping of System Clock Output

Table 18.4 ϕ Pin State in Various Operating States

Operating State	PSTOP = 0	PSTOP = 1
Hardware standby	High impedance	High impedance
Software standby	Always high	High impedance
Sleep mode	System clock output	High impedance
Normal operation	System clock output	High impedance

Section 19 Electrical Characteristics

19.1 Absolute Maximum Ratings

Table 19.1 lists the absolute maximum ratings.

Table 19.1 Absolute Maximum Ratings

Item	Symbol	Value	Unit
Power supply voltage	V_{CC}	5 V version: –0.3 to +7.0	V
		3 V version: –0.3 to +4.6	V
Input voltage (except for port 7)	V_{in}	–0.3 to V_{CC} +0.3	V
Input voltage (port 7)	V_{in}	–0.3 to AV_{CC} +0.3	V
Reference voltage	V_{REF}	–0.3 to AV_{CC} +0.3	V
Analog power supply voltage	AV_{CC}	5 V version: –0.3 to +7.0	V
		3 V version: –0.3 to +4.6	V
Analog input voltage	V_{AN}	–0.3 to AV_{CC} +0.3	V
Operating temperature	T_{opr}	Regular specifications: –20 to +75	°C
		Wide-range specifications: –40 to +85	°C
Storage temperature	T_{stg}	–55 to +125	°C

Caution: Permanent damage to the chip may result if absolute maximum ratings are exceeded.

19.2 DC Characteristics

Table 19.2 lists the DC characteristics. Table 19.3 lists the permissible output currents.

Table 19.2 DC Characteristics (1)

Conditions: V_{CC} = 5.0 V ±10%, AV_{CC} = 5.0 V ±10%, V_{REF} = 4.5 V to AV_{CC}*[1],
V_{SS} = AV_{SS} = 0 V*[1], T_a = –20°C to +75°C (regular specifications),
T_a = –40°C to +85°C (wide-range specifications)

Item		Symbol	Min	Typ	Max	Unit	Test Conditions
Schmitt trigger input voltages	Port A, $P8_0$ to $P8_2$	V_T^-	1.0	—	—	V	
		V_T^+	—	—	V_{CC} × 0.7	V	
		$V_T^+ - V_T^-$	0.4	—	—	V	
Input high voltage	$\overline{RES}$, $\overline{STBY}$, NMI, MD_2 to MD_0	V_{IH}	V_{CC} –0.7	—	V_{CC} +0.3	V	
	EXTAL		V_{CC} × 0.7	—	V_{CC} +0.3	V	
	Port 7		2.0	—	AV_{CC} +0.3	V	
	Ports 4 to 6, $P8_3$, $P8_4$, $P9_0$ to $P9_5$, port B		2.0	—	V_{CC} +0.3	V	
Input low voltage	$\overline{RES}$, $\overline{STBY}$, MD_2 to MD_0	V_{IL}	–0.3	—	0.5	V	
	NMI, EXTAL, ports 4 to 7, $P8_3$, $P8_4$, $P9_0$ to $P9_5$, port B		–0.3	—	0.8	V	
Output high voltage	All output pins (except $\overline{RESO}$)	V_{OH}	V_{CC} –0.5	—	—	V	I_{OH} = –200 μA
			3.5	—	—	V	I_{OH} = –1 mA
Output low voltage	All output pins (except $\overline{RESO}$)	V_{OL}	—	—	0.4	V	I_{OL} = 1.6 mA
	A_0 to A_{19}		—	—	1.0	V	I_{OL} = 10 mA
	$\overline{RESO}$		—	—	0.4	V	I_{OL} = 1.6 mA
Input leakage current	$\overline{STBY}$, NMI, $\overline{RES}$, MD_2 to MD_0	$\|I_{in}\|$	—	—	1.0	μA	V_{in} = 0.5 V to V_{CC} –0.5 V
	Port 7		—	—	1.0	μA	V_{in} = 0.5 V to AV_{CC} –0.5 V

Item		Symbol	Min	Typ	Max	Unit	Test Conditions
Three-state leakage current	Ports 4 to 6, A_0 to A_{19}, Ports 8 to B	$\|I_{TSI}\|$	—	—	1.0	μA	V_{in} = 0.5 V to V_{CC} –0.5 V
	$\overline{RESO}$		—	—	10.0	μA	V_{in} = 0 V
Input pull-up MOS current	Ports 4 and 5	$-I_p$	50	—	300	μA	V_{in} = 0 V
Input capacitance	NMI	C_{in}	—	—	50	pF	Vin = 0 V f = fmin Ta = 25°C
	All input pins except NMI		—	—	15	pF	
Current dissipation*2	Normal operation	I_{CC}*3	—	32 (5.0 V)	47	mA	f = 20 MHz
			—	37 (5.0 V)	58	mA	f = 25 MHz
	Sleep mode		—	24 (5.0 V)	38	mA	f = 20 MHz
			—	29 (5.0 V)	47	mA	f = 25 MHz
	Module standby mode		—	19 (5.0 V)	31	mA	f = 20 MHz
			—	21 (5.0 V)	37	mA	f = 25 MHz
	Standby mode		—	1.0	10	μA	$T_a \leq 50°C$
			—	—	80	μA	$50°C < T_a$
Analog power supply current	During A/D conversion	AI_{CC}	—	0.6	1.5	mA	
	During A/D and D/A conversion		—	0.6	1.5	mA	
	Idle		—	0.01	5.0	μA	DASTE = 0
Reference current	During A/D conversion	AI_{CC}	—	0.45	0.8	mA	
	During A/D and D/A conversion		—	2.0	3.0	mA	
	Idle		—	0.01	5.0	μA	DASTE = 0
RAM standby voltage		V_{RAM}	2.0	—	—	V	

Notes: 1. Do not open the pin connections of the AV_{CC}, V_{REF} and AV_{SS} pins while the A/D converter is not in use.

Connect the AV_{CC} and V_{REF} pins to the V_{CC} and connect the AV_{SS} pin to the V_{SS}, respectively.

2. Given current consumption values are when all the output pins are made to unloaded state and, furthermore, when the on-chip pull-up MOS is turned off under conditions that V_{IH} min = V_{CC} –0.5 V and V_{IL} max = 0.5 V.

Also, the aforesaid current consumption values are when V_{IH} min = $V_{CC} \times 0.9$ and V_{IL} max = 0.3 V under the condition of $V_{RAM} \leq V_{CC} < 4.5$ V.

3. I_{CC} max. (under normal operations) = 3.0 (mA) + 0.40 (mA/(MHz × V)) × V_{CC} × f

I_{CC} max. (when using the sleeve) = 3.0 (mA) + 0.32 (mA/(MHz × V)) × V_{CC} × f

I_{CC} max. (when the sleeve + module are standing by)
= 3.0 (mA) + 0.25 (mA/(MHz × V)) × V_{CC} × f

Also, the typ. values for current dissipation are reference values.

Table 19.2 DC Characteristics (2)

Conditions: V_{CC} = 3.0 to 3.6 V, AV_{CC} = 3.0 to 3.6 V, V_{REF} = 3.0 V to AV_{CC}*[1], V_{SS} = AV_{SS} = 0 V*[1], T_a = –20°C to +75°C (regular specifications), T_a = –40°C to +85°C (wide-range specifications)

Item		Symbol	Min	Typ	Max	Unit	Test Conditions
Schmitt trigger input voltages	Port A, $P8_0$ to $P8_2$	V_T^-	V_{CC} × 0.2	—	—	V	
		V_T^+	—	—	V_{CC} × 0.7	V	
		$V_T^+ - V_T^-$	V_{CC} × 0.05	—	—	V	
Input high voltage	$\overline{RES}$, $\overline{STBY}$, NMI, MD_2 to MD_0	V_{IH}	V_{CC} × 0.9	—	V_{CC} +0.3	V	
	EXTAL		V_{CC} × 0.7	—	V_{CC} +0.3	V	
	Port 7		V_{CC} × 0.7	—	AV_{CC} +0.3	V	
	Ports 4 to 6 $P8_3$, $P8_4$, $P9_0$ to $P9_5$, port B		V_{CC} × 0.7	—	V_{CC} +0.3	V	
Input low voltage	$\overline{RES}$, $\overline{STBY}$, MD_2 to MD_0	V_{IL}	–0.3	—	V_{CC} × 0.1	V	
	NMI, EXTAL, ports 4 to 7 $P8_3$, $P8_4$, $P9_0$ to $P9_5$, port B		–0.3	—	V_{CC} × 0.2	V	
Output high voltage	All output pins (except $\overline{RESO}$)	V_{OH}	V_{CC} –0.5	—	—	V	I_{OH} = –200 μA
			V_{CC} –1.0	—	—	V	I_{OH} = –1 mA
Output low voltage	All output pins (except $\overline{RESO}$)	V_{OL}	—	—	0.4	V	I_{OL} = 1.6 mA
	A_0 to A_{19}		—	—	1.0	V	I_{OL} = 5 mA
	$\overline{RESO}$		—	—	0.4	V	I_{OL} = 1.6 mA
Input leakage current	$\overline{STBY}$, NMI, $\overline{RES}$, MD_2 to MD_0	$\|I_{in}\|$	—	—	1.0	μA	V_{in} = 0.5 V to V_{CC} –0.5 V
	Port 7		—	—	1.0	μA	V_{in} = 0.5 V to AV_{CC} –0.5 V

Item		Symbol	Min	Typ	Max	Unit	Test Conditions
Three-state leakage current	Ports 4 to 6, A_0 to A_{19}, Ports 8 to B	$\|I_{TSI}\|$	—	—	1.0	μA	V_{in} = 0.5 V to V_{CC} –0.5 V
	$\overline{RESO}$		—	—	10.0	μA	V_{in} = 0 V
Input pull-up MOS current	Ports 4 and 5	$-I_p$	10	—	300	μA	V_{in} = 0 V
Input capacitance	NMI	C_{in}	—	—	50	pF	V_{in} = 0 V f = f_{min} T_a = 25°C
	All input pins except NMI		—	—	15	pF	
Current dissipation*2	Normal operation	I_{CC}*3	—	37 (3.3 V)	58	mA	f = 25 MHz
	Sleep mode		—	29 (3.3 V)	47	mA	f = 25 MHz
	Module standby mode		—	21 (3.3 V)	37	mA	f = 25 MHz
	Standby mode		—	1.0	10	μA	$T_a \leq$ 50°C
			—	—	80	μA	50°C < T_a
Analog power supply current	During A/D conversion	AI_{CC}	—	0.6	1.5	mA	AV_{CC} = 3.0 V
	During A/D and D/A conversion		—	0.6	1.5	mA	AV_{CC} = 3.0 V
	Idle		—	0.01	5.0	μA	DASTE = 0
Reference current	During A/D conversion	AI_{CC}	—	0.45	0.8	mA	V_{REF} = 3.0 V
	During A/D and D/A conversion		—	2.0	3.0	mA	V_{REF} = 3.0 V
	Idle		—	0.01	5.0	μA	DASTE = 0
RAM standby voltage		V_{RAM}	2.0	—	—	V	

Notes: 1. Do not open the pin connections of the AV_{CC}, V_{REF} and AV_{SS} pins while the A/D converter is not in use.

Connect the AV_{CC} and V_{REF} pins to the V_{CC} and connect the AV_{SS} pin to the V_{SS}, respectively.

2. Given current consumption values are when all the output pins are made to unloaded state and, furthermore, when the on-chip pull-up MOS is turned off under conditions that V_{IH} min = V_{CC} –0.5 V and V_{IL} max = 0.5 V.

Also, the aforesaid current consumption values are when V_{IH} min = $V_{CC} \times 0.9$ and V_{IL} max = 0.3 V under the condition of $V_{RAM} \leq V_{CC} < 3.0$ V.

3. I_{CC} max. (under normal operations) = 3.0 (mA) + 0.61 (mA/(MHz × V)) × V_{CC} × f
   I_{CC} max. (when using the sleeve) = 3.0 (mA) + 0.49 (mA/(MHz × V)) × V_{CC} × f
   I_{CC} max. (when the sleeve + module are standing by)
   = 3.0 (mA) + 0.38 (mA/(MHz × V)) × V_{CC} × f
   Also, the typ. values for current dissipation are reference values.

Table 19.3 Permissible Output Currents

Condition: T_a = –20°C to +75°C (regular specifications), T_a = –40°C to +85°C (wide-range specifications)

Condition A: V_{CC} = 3.0 to 3.6 V, AV_{CC} = 3.0 to 3.6 V, V_{REF} = 3.0 to AV_{CC}, V_{SS} = AV_{SS} = 0 V

Condition B: V_{CC} = 4.5 to 5.5 V, AV_{CC} = 4.5 to 5.5 V, V_{REF} = 4.5 to AV_{CC}, V_{SS} = AV_{SS} = 0 V

			Condition			
			A, B			
Item		**Symbol**	**Min**	**Typ**	**Max**	**Unit**
Permissible output low current (per pin)	A_{19} to A_0	I_{OL}	—	—	10	mA
	Other output pins		—	—	2.0	mA
Permissible output low current (total)	Total of 20 pins in A_{19} to A_0	ΣI_{OL}	—	—	80	mA
	Total of all output pins, including the above		—	—	120	mA
Permissible output high current (per pin)	All output pins	$\lvert -I_{OH} \rvert$	—	—	2.0	mA
Permissible output high current (total)	Total of all output pins	$\lvert -\Sigma I_{OH} \rvert$	—	—	40	mA

Notes: 1. To protect chip reliability, do not exceed the output current values in table 19.3.
2. When directly driving a darlington pair or LED, always insert a current-limiting resistor in the output line, as shown in figure 19.1.

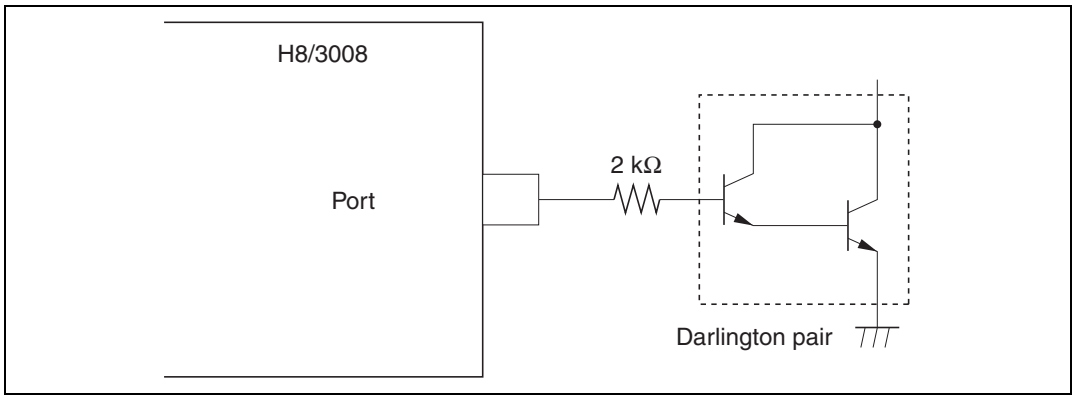

Figure 19.1 Darlington Pair Drive Circuit (Example)

19.3 AC Characteristics

Clock timing parameters are listed in table 19.4, control signal timing parameters in table 19.5, and bus timing parameters in table 19.6. Timing parameters of the on-chip supporting modules are listed in table 19.7.

Table 19.4 Clock Timing

Condition: T_a = –20°C to +75°C (regular specifications), T_a = –40°C to +85°C (wide-range specifications)

Condition A: V_{CC} = 3.0 to 3.6 V, AV_{CC} = 3.0 to 3.6 V, V_{REF} = 3.0 to AV_{CC}, V_{SS} = AV_{SS} = 0 V, fmax = 25 MHz

Condition B: V_{CC} = 5.0 V ±10%, AV_{CC} = 5.0 V ±10%, V_{REF} = 4.5 to AV_{CC}, V_{SS} = AV_{SS} = 0 V, fmax = 20 MHz

Condition C: V_{CC} = 5.0 V ±10%, AV_{CC} = 5.0 V ±10%, V_{REF} = 4.5 to AV_{CC}, V_{SS} = AV_{SS} = 0 V, fmax = 25 MHz

		Condition							
		A		B		C			
Item	Symbol	Min	Max	Min	Max	Min	Max	Unit	Test Conditions
Clock cycle time	t_{cyc}	40	500	50	500	40	500	ns	Figure 19.3 to figure 19.15
Clock pulse low width	t_{CL}	10	—	15	—	10	—	ns	
Clock pulse high width	t_{CH}	10	—	15	—	10	—	ns	
Clock rise time	t_{Cr}	—	10	—	10	—	10	ns	
Clock fall time	t_{Cf}	—	10	—	10	—	10	ns	
Clock oscillator settling time at reset	t_{OSC1}	20	—	20	—	20	—	ms	Figure 19.3
Clock oscillator settling time in software standby	t_{OSC2}	7	—	7	—	7	—	ms	Figure 18.1

Table 19.5 Control Signal Timing

Condition: T_a = –20°C to +75°C (regular specifications), T_a = –40°C to +85°C (wide-range specifications)

Condition A: V_{CC} = 3.0 to 3.6 V, AV_{CC} = 3.0 to 3.6 V, V_{REF} = 3.0 to AV_{CC}, V_{SS} = AV_{SS} = 0 V, fmax = 25 MHz

Condition B: V_{CC} = 5.0 V ±10%, AV_{CC} = 5.0 V ±10%, V_{REF} = 4.5 to AV_{CC}, V_{SS} = AV_{SS} = 0 V, fmax = 20 MHz

Condition C: V_{CC} = 5.0 V ±10%, AV_{CC} = 5.0 V ±10%, V_{REF} = 4.5 to AV_{CC}, V_{SS} = AV_{SS} = 0 V, fmax = 25 MHz

		Condition					
		A		B and C			
Item	**Symbol**	**Min**	**Max**	**Min**	**Max**	**Unit**	**Test Conditions**
$\overline{RES}$ setup time	t_{RESS}	150	—	150	—	ns	Figure 19.4
$\overline{RES}$ pulse width	t_{RESW}	10	—	10	—	t_{cyc}	
Mode programming setup time	t_{MDS}	200	—	200	—	ns	
$\overline{RESO}$ output delay time	t_{RESD}	—	50	—	50	ns	Figure 19.5
$\overline{RESO}$ output pulse width	t_{RESOW}	132	—	132	—	t_{cyc}	
NMI, $\overline{IRQ}$ setup time	t_{NMIS}	150	—	150	—	ns	Figure 19.6
NMI, $\overline{IRQ}$ hold time	t_{NMIH}	10	—	10	—	ns	
NMI, $\overline{IRQ}$ pulse width (in recovery from software standby mode)	t_{NMIW}	200	—	200	—	ns	

Table 19.6 Bus Timing

Condition: T_a = –20°C to +75°C (regular specifications), T_a = –40°C to +85°C (wide-range specifications)

Condition A: V_{CC} = 3.0 to 3.6 V, AV_{CC} = 3.0 to 3.6 V, V_{REF} = 3.0 to AV_{CC}, V_{SS} = AV_{SS} = 0 V, fmax = 25 MHz

Condition B: V_{CC} = 5.0 V ±10%, AV_{CC} = 5.0 V ±10%, V_{REF} = 4.5 to AV_{CC}, V_{SS} = AV_{SS} = 0 V, fmax = 20 MHz

Condition C: V_{CC} = 5.0 V ±10%, AV_{CC} = 5.0 V ±10%, V_{REF} = 4.5 to AV_{CC}, V_{SS} = AV_{SS} = 0 V, fmax = 25 MHz

		Condition					
		A		B and C			
Item	**Symbol**	**Min**	**Max**	**Min**	**Max**	**Unit**	**Test Conditions**
Address delay time	t_{AD}	—	25	—	25	ns	Figure 19.7, figure 19.8
Address hold time	t_{AH}	0.5 t_{cyc} –20	—	0.5 t_{cyc} –20	—	ns	
Read strobe delay time	t_{RSD}	—	25	—	25	ns	
Address strobe delay time	t_{ASD}	—	25	—	25	ns	
Write strobe delay time	t_{WSD}	—	25	—	25	ns	
Strobe delay time	t_{SD}	—	25	—	25	ns	
Write strobe pulse width 1	t_{WSW1}	1.0 t_{cyc} –25	—	1.0 t_{cyc} –25	—	ns	
Write strobe pulse width 2	t_{WSW2}	1.5 t_{cyc} –25	—	1.5 t_{cyc} –25	—	ns	
Address setup time 1	t_{AS1}	0.5 t_{cyc} –20	—	0.5 t_{cyc} –20	—	ns	
Address setup time 2	t_{AS2}	1.0 t_{cyc} –20	—	1.0 t_{cyc} –20	—	ns	
Read data setup time	t_{RDS}	25	—	25	—	ns	
Read data hold time	t_{RDH}	0	—	0	—	ns	
Write data delay time	t_{WDD}	—	35	—	35	ns	
Write data setup time 1	t_{WDS1}	1.0 t_{cyc} –30	—	1.0 t_{cyc} –30	—	ns	
Write data setup time 2	t_{WDS2}	2.0 t_{cyc} –30	—	2.0 t_{cyc} –30	—	ns	

Item	Symbol	Condition A Min	Condition A Max	Condition B and C Min	Condition B and C Max	Unit	Test Conditions
Write data hold time	t_{WDH}	0.5 t_{cyc} –15	—	0.5 t_{cyc} –15	—	ns	Figure 19.7, figure 19.8
Read data access time 1	t_{ACC1}	—	2.0 t_{cyc} –45	—	2.0 t_{cyc} –45	ns	
Read data access time 2	t_{ACC2}	—	3.0 t_{cyc} –45	—	3.0 t_{cyc} –45	ns	
Read data access time 3	t_{ACC3}	—	1.5 t_{cyc} –45	—	1.5 t_{cyc} –45	ns	
Read data access time 4	t_{ACC4}	—	2.5 t_{cyc} –45	—	2.5 t_{cyc} –45	ns	
Precharge time 1	t_{PCH1}	1.0 t_{cyc} –20	—	1.0 t_{cyc} –20	—	ns	
Precharge time 2	t_{PCH2}	0.5 t_{cyc} –20	—	0.5 t_{cyc} –20	—	ns	
Wait setup time	t_{WTS}	25	—	25	—	ns	Figure 19.9
Wait hold time	t_{WTH}	5	—	5	—	ns	
Bus request setup time	t_{BRQS}	25	—	25	—	ns	Figure 19.10
Bus acknowledge delay time 1	t_{BACD1}	—	30	—	30	ns	
Bus acknowledge delay time 2	t_{BACD2}	—	30	—	30	ns	
Bus-floating time	t_{BZD}	—	30	—	30	ns	

Note: In order to secure the address hold time relative to the rise of the $\overline{RD}$ strobe, address update mode 2 should be used. For details see section 6.3.5, Address Output Method.

Table 19.7 Timing of On-Chip Supporting Modules

Condition: T_a = –20°C to +75°C (regular specifications), T_a = –40°C to +85°C (wide-range specifications)

Condition A: V_{CC} = 3.0 to 3.6 V, AV_{CC} = 3.0 to 3.6 V, V_{REF} = 3.0 to AV_{CC}, V_{SS} = AV_{SS} = 0 V, fmax = 25 MHz

Condition B: V_{CC} = 5.0 V ±10%, AV_{CC} = 5.0 V ±10%, V_{REF} = 4.5 to AV_{CC}, V_{SS} = AV_{SS} = 0 V, fmax = 20 MHz

Condition C: V_{CC} = 5.0 V ±10%, AV_{CC} = 5.0 V ±10%, V_{REF} = 4.5 to AV_{CC}, V_{SS} = AV_{SS} = 0 V, fmax = 25 MHz

				Condition					
				A		B and C			
Module	**Item**		**Symbol**	**Min**	**Max**	**Min**	**Max**	**Unit**	**Test Conditions**
Ports and TPC	Output data delay time		t_{PWD}	—	50	—	50	ns	Figure 19.11
	Input data setup time		t_{PRS}	50	—	50	—	ns	
	Input data hold time		t_{PRH}	50	—	50	—	ns	
16-bit timer	Timer output delay time		t_{TOCD}	—	50	—	50	ns	Figure 19.12
	Timer input setup time		t_{TICS}	50	—	50	—	ns	
	Timer clock input setup time		t_{TCKS}	50	—	50	—	ns	Figure 19.13
	Timer clock pulse width	Single edge	t_{TCKWH}	1.5	—	1.5	—	t_{cyc}	
		Both edges	t_{TCKWL}	2.5	—	2.5	—	t_{cyc}	
8-bit timer	Timer output delay time		t_{TOCD}	—	50	—	50	ns	Figure 19.12
	Timer input setup time		t_{TICS}	50	—	50	—	ns	
	Timer clock input setup time		t_{TCKS}	50	—	50	—	ns	Figure 19.13
	Timer clock pulse width	Single edge	t_{TCKWH}	1.5	—	1.5	—	t_{cyc}	
		Both edges	t_{TCKWL}	2.5	—	2.5	—	t_{cyc}	

Module	Item		Symbol	Condition A Min	Condition A Max	Condition B and C Min	Condition B and C Max	Unit	Test Conditions
SCI	Input clock cycle	Asynchronous	t_{Scyc}	4	—	4	—	t_{cyc}	Figure 19.14
		Synchronous		6	—	6	—	t_{cyc}	
	Input clock rise time		t_{SCKr}	—	1.5	—	1.5	t_{cyc}	
	Input clock fall time		t_{SCKf}	—	1.5	—	1.5	t_{cyc}	
	Input clock pulse width		t_{SCKW}	0.4	0.6	0.4	0.6	t_{Scyc}	
	Transmit data delay time		t_{TXD}	—	100	—	100	ns	Figure 19.15
	Receive data setup time (synchronous)		t_{RXS}	100	—	100	—	ns	
	Receive data hold time (synchronous)	Clock input	t_{RXH}	100	—	100	—	ns	
		Clock output		0	—	0	—	ns	

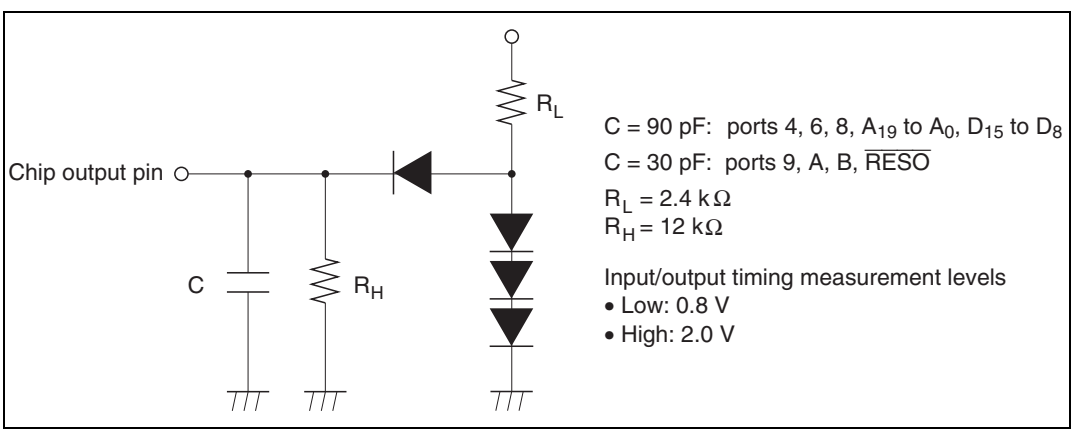

Figure 19.2 Output Load Circuit

19.4 A/D Conversion Characteristics

Table 19.8 lists the A/D conversion characteristics.

Table 19.8 A/D Conversion Characteristics

Condition: T_a = –20°C to +75°C (regular specifications), T_a = –40°C to +85°C (wide-range specifications)

Condition A: V_{CC} = 3.0 to 3.6 V, AV_{CC} = 3.0 to 3.6 V, V_{REF} = 3.0 to AV_{CC}, V_{SS} = AV_{SS} = 0 V, fmax = 25 MHz

Condition B: V_{CC} = 5.0 V ±10%, AV_{CC} = 5.0 V ±10%, V_{REF} = 4.5 to AV_{CC}, V_{SS} = AV_{SS} = 0 V, fmax = 25 MHz

Condition C: V_{CC} = 5.0 V ±10%, AV_{CC} = 5.0 V ±10%, V_{REF} = 4.5 to AV_{CC}, V_{SS} = AV_{SS} = 0 V, fmax = 25 MHz

			Condition						
			A			B and C			
Item			Min	Typ	Max	Min	Typ	Max	Unit
Conversion time: 134 states	Resolution		10	10	10	10	10	10	bits
	Conversion time (single mode)		5.36	—	—	5.36	—	—	μs
	Analog input capacitance		—	—	20	—	—	20	pF
	Permissible signal-source impedance	$\phi \leq$ 13 MHz	—	—	10	—	—	10	kΩ
		$\phi >$ 13 MHz	—	—	5	—	—	5	kΩ
	Nonlinearity error		—	—	±3.5	—	—	±3.5	LSB
	Offset error		—	—	±3.5	—	—	±3.5	LSB
	Full-scale error		—	—	±3.5	—	—	±3.5	LSB
	Quantization error		—	—	±0.5	—	—	±0.5	LSB
	Absolute accuracy		—	—	±4.0	—	—	±4.0	LSB

Item		Condition A Min	Condition A Typ	Condition A Max	Condition B and C Min	Condition B and C Typ	Condition B and C Max	Unit
Conversion time: 70 states	Resolution	10	10	10	10	10	10	bits
	Conversion time (single mode)	5.36	—	—	5.36	—	—	μs
	Analog input capacitance	—	—	20	—	—	20	pF
	Permissible signal-source impedance $\phi \leq 13$ MHz	—	—	5	—	—	5	kΩ
	Permissible signal-source impedance $\phi > 13$ MHz	—	—	3	—	—	3	kΩ
	Nonlinearity error	—	—	±7.5	—	—	±7.5	LSB
	Offset error	—	—	±7.5	—	—	±7.5	LSB
	Full-scale error	—	—	±7.5	—	—	±7.5	LSB
	Quantization error	—	—	±0.5	—	—	±0.5	LSB
	Absolute accuracy	—	—	±8.0	—	—	±8.0	LSB

Note: * Do not select 70 states as the conversion time when using an operating frequency that exceeds f = 70 (states)/5.36 (μs) ≈ 13.0 (MHz).

19.5 D/A Conversion Characteristics

Table 19.9 lists the D/A conversion characteristics.

Table 19.9 D/A Conversion Characteristics

Condition: T_a = –20°C to +75°C (regular specifications), T_a = –40°C to +85°C (wide-range specifications)

Condition A: V_{CC} = 3.0 to 3.6 V, AV_{CC} = 3.0 to 3.6 V, V_{REF} = 3.0 to AV_{CC}, V_{SS} = AV_{SS} = 0 V, fmax = 25 MHz

Condition B: V_{CC} = 5.0 V ±10%, AV_{CC} = 5.0 V ±10%, V_{REF} = 4.5 to AV_{CC}, V_{SS} = AV_{SS} = 0 V, fmax = 20 MHz

Condition C: V_{CC} = 5.0 V ±10%, AV_{CC} = 5.0 V ±10%, V_{REF} = 4.5 to AV_{CC}, V_{SS} = AV_{SS} = 0 V, fmax = 25 MHz

	Condition							
	A			B and C				
Item	**Min**	**Typ**	**Max**	**Min**	**Typ**	**Max**	**Unit**	**Conditions**
Resolution	8	8	8	8	8	8	bits	
Conversion time (setting time)	—	—	10	—	—	10	μs	20 pF capacitive load
Absolute accuracy	—	±2.0	±3.0	—	±1.5	±2.0	LSB	2 MΩ resistive load
	—	—	±2.0	—	—	±1.5	LSB	4 MΩ resistive load

19.6 Operational Timing

This section shows timing diagrams.

19.6.1 Clock Timing

Clock timing is shown as follows:

- Oscillator settling timing
  Figure 19.3 shows the oscillator settling timing.

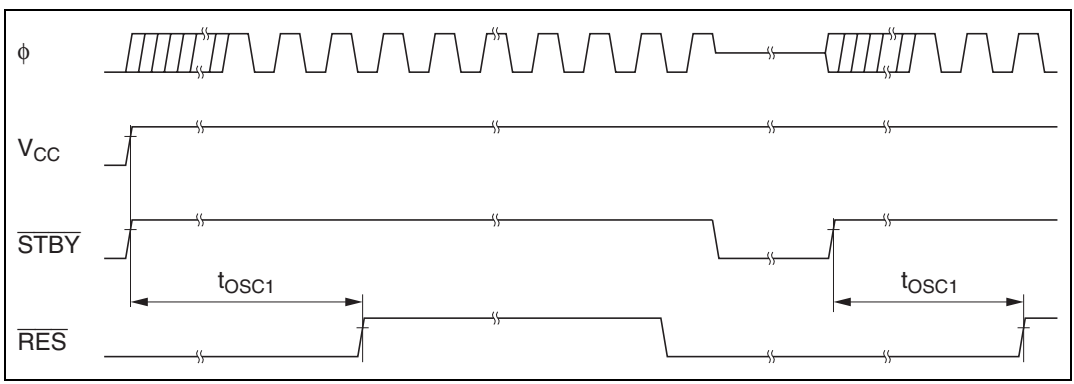

Figure 19.3 Oscillator Settling Timing

19.6.2 Control Signal Timing

Control signal timing is shown as follows:

- Reset input timing
  Figure 19.4 shows the reset input timing.
- Reset output timing
  Figure 19.5 shows the reset output timing.
- Interrupt input timing
  Figure 19.6 shows the interrupt input timing for NMI and $\overline{IRQ_5}$ to $\overline{IRQ_0}$.

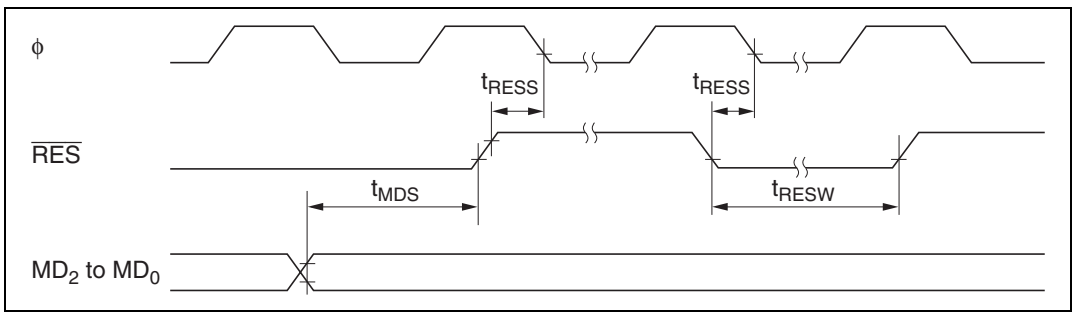

Figure 19.4 Reset Input Timing

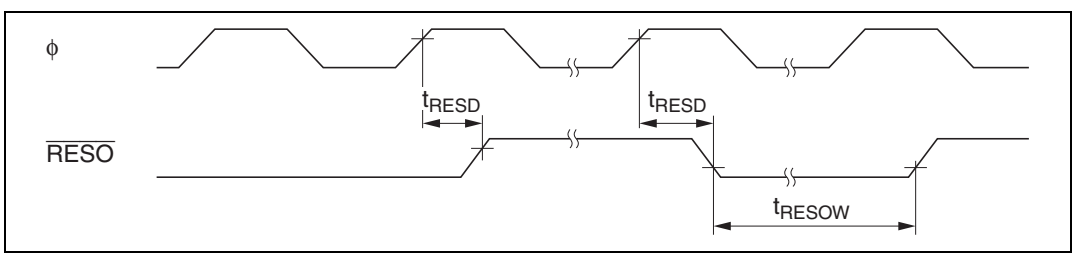

Figure 19.5 Reset Output Timing

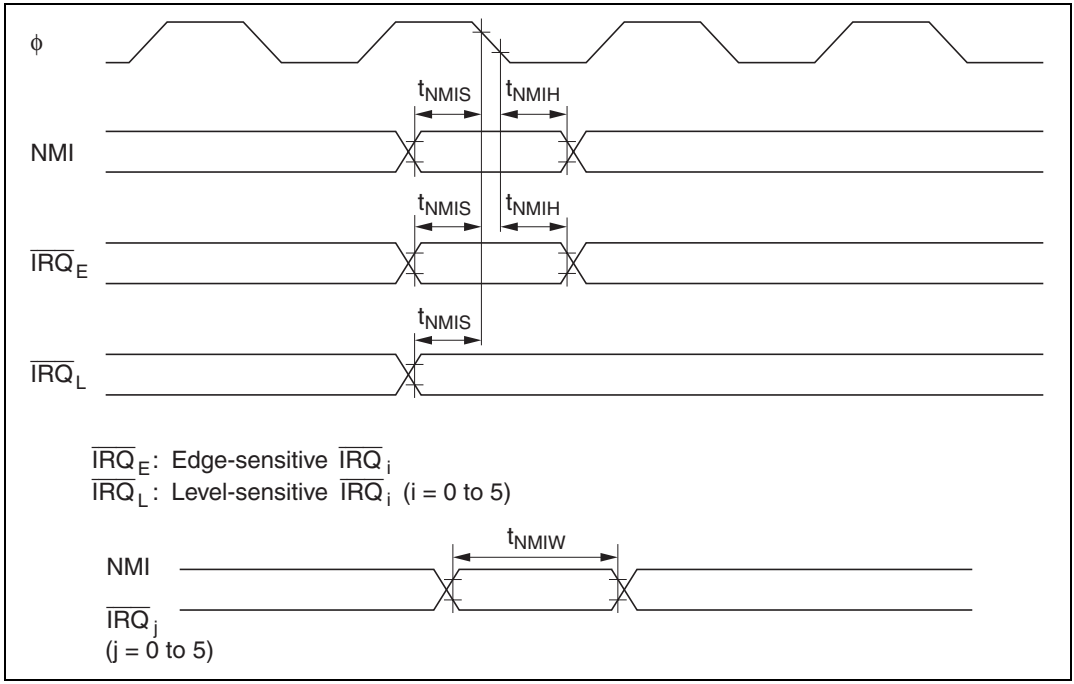

Figure 19.6 Interrupt Input Timing

19.6.3 Bus Timing

Bus timing is shown as follows:

- Basic bus cycle: two-state access
  Figure 19.7 shows the timing of the external two-state access cycle.
- Basic bus cycle: three-state access
  Figure 19.8 shows the timing of the external three-state access cycle.
- Basic bus cycle: three-state access with one wait state
  Figure 19.9 shows the timing of the external three-state access cycle with one wait state inserted.
- Bus-release mode timing
  Figure 19.10 shows the bus-release mode timing.

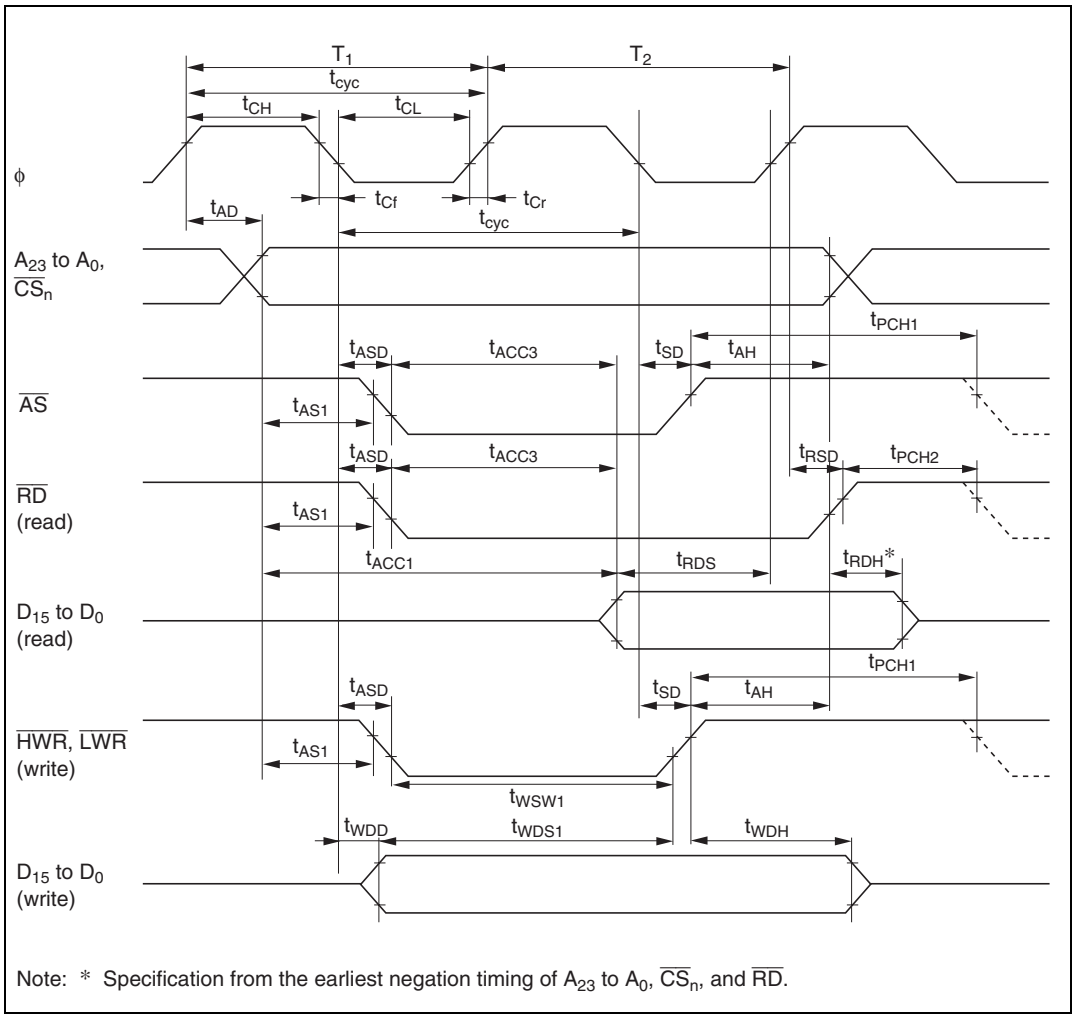

Note: * Specification from the earliest negation timing of A_{23} to A_0, $\overline{CS}_n$, and $\overline{RD}$.

Figure 19.7 Basic Bus Cycle: Two-State Access

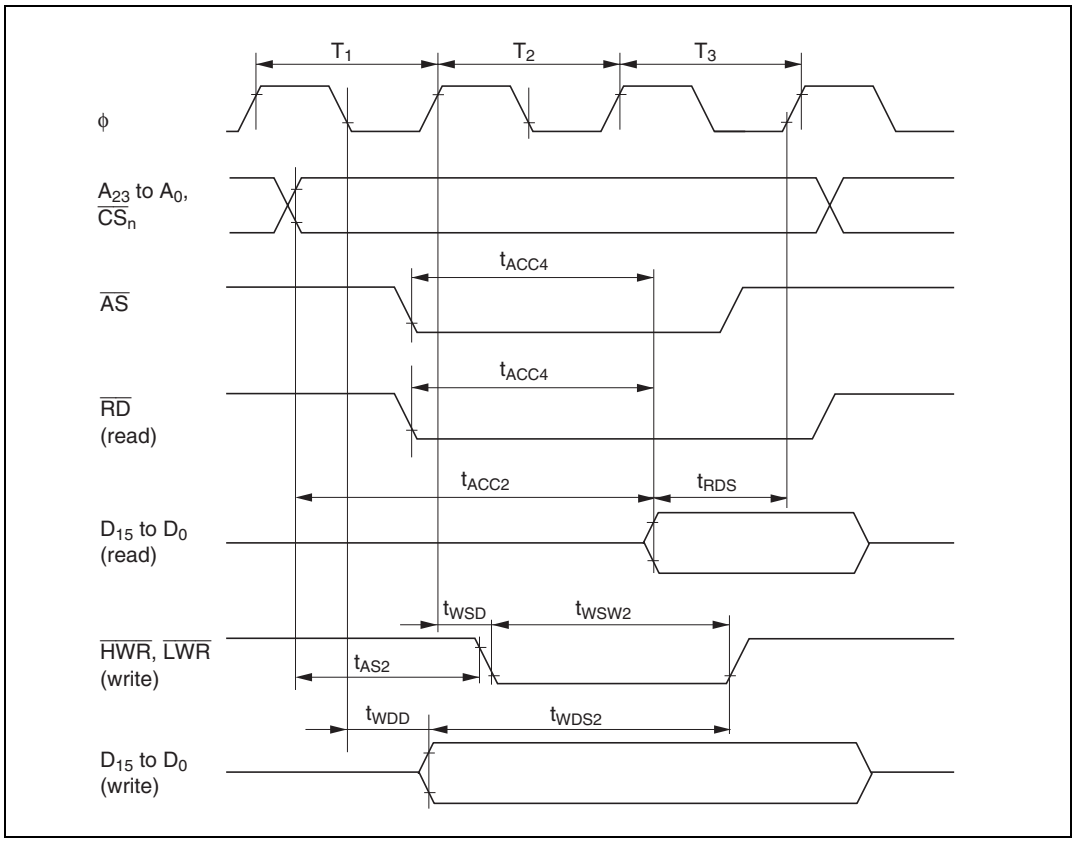

Figure 19.8 Basic Bus Cycle: Three-State Access

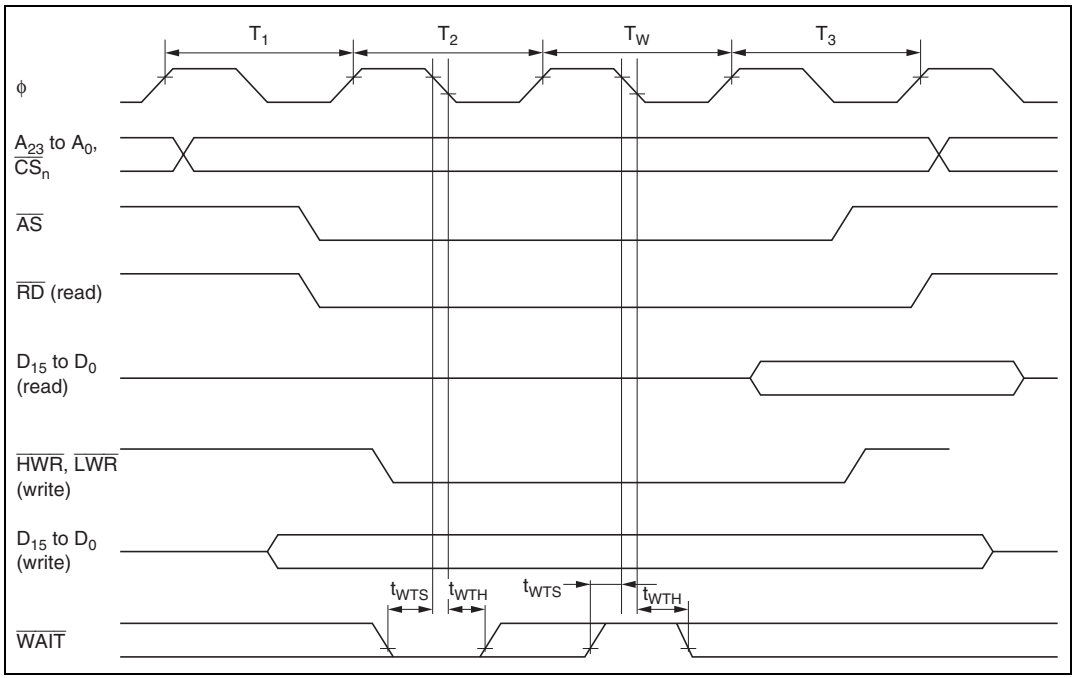

Figure 19.9 Basic Bus Cycle: Three-State Access with One Wait State

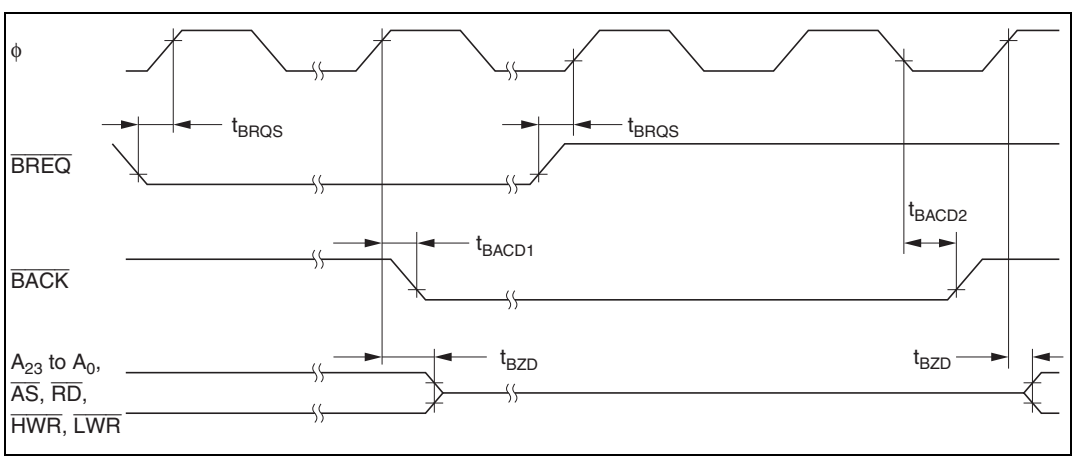

Figure 19.10 Bus-Release Mode Timing

19.6.4 TPC and I/O Port Timing

Figure 19.11 shows the TPC and I/O port input/output timing.

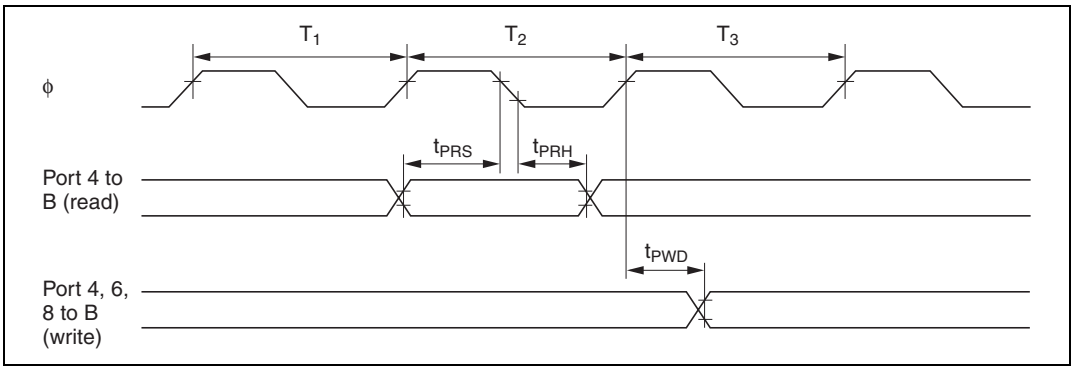

Figure 19.11 TPC and I/O Port Input/Output Timing

19.6.5 Timer Input/Output Timing

16-bit timer and 8-bit timer timing are shown below.

- Timer input/output timing
  Figure 19.12 shows the timer input/output timing.
- Timer external clock input timing
  Figure 19.13 shows the timer external clock input timing.

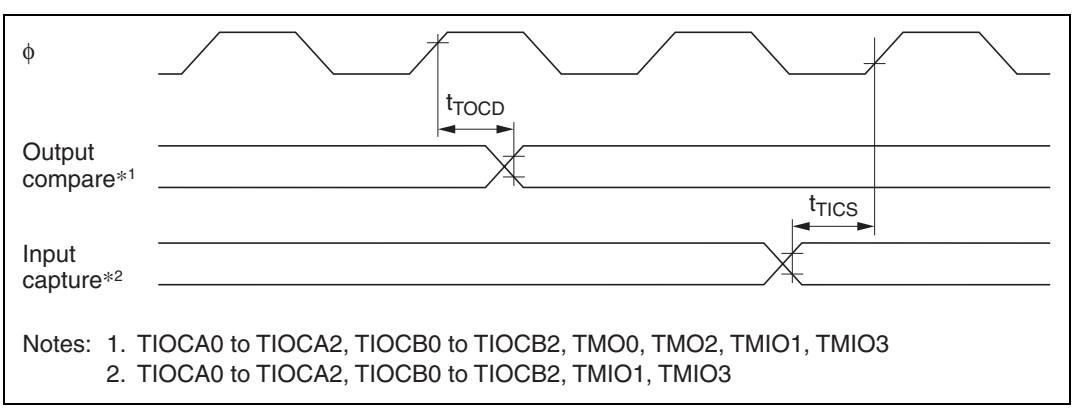

Figure 19.12 Timer Input/Output Timing

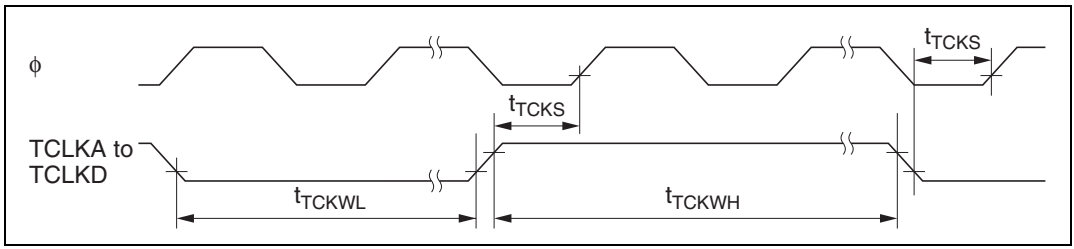

Figure 19.13 Timer External Clock Input Timing

19.6.6 SCI Input/Output Timing

SCI timing is shown as follows:

- SCI input clock timing
  Figure 19.14 shows the SCI input clock timing.
- SCI input/output timing (synchronous mode)
  Figure 19.15 shows the SCI input/output timing in synchronous mode.

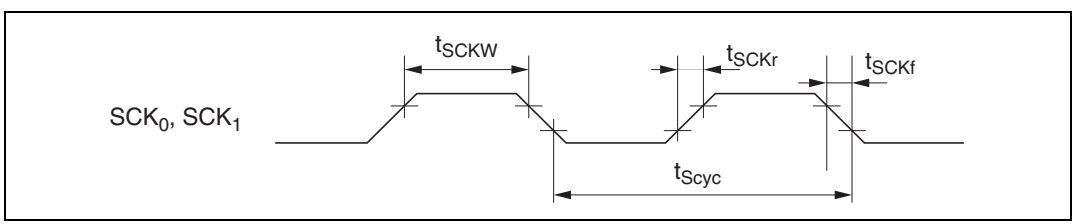

Figure 19.14 SCI Input Clock Timing

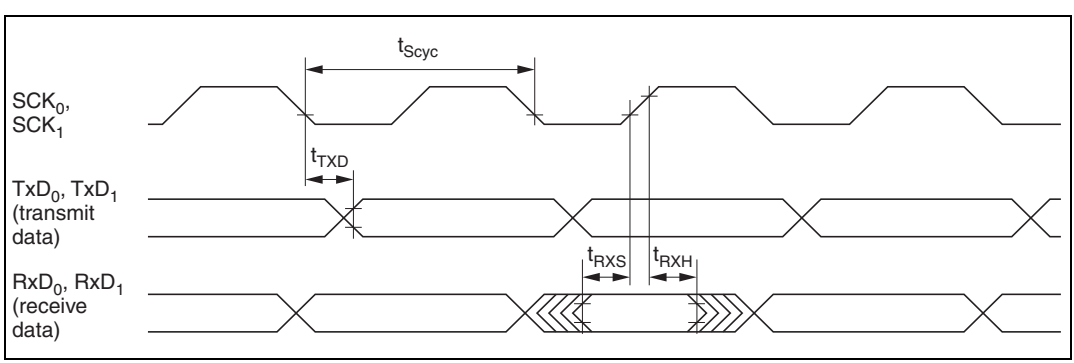

Figure 19.15 SCI Input/Output Timing in Synchronous Mode

Appendix A Instruction Set

A.1 Instruction List

Operand Notation

Symbol	Description
Rd	General destination register
Rs	General source register
Rn	General register
ERd	General destination register (address register or 32-bit register)
ERs	General source register (address register or 32-bit register)
ERn	General register (32-bit register)
(EAd)	Destination operand
(EAs)	Source operand
PC	Program counter
SP	Stack pointer
CCR	Condition code register
N	N (negative) flag in CCR
Z	Z (zero) flag in CCR
V	V (overflow) flag in CCR
C	C (carry) flag in CCR
disp	Displacement
→	Transfer from the operand on the left to the operand on the right, or transition from the state on the left to the state on the right
+	Addition of the operands on both sides
–	Subtraction of the operand on the right from the operand on the left
×	Multiplication of the operands on both sides
÷	Division of the operand on the left by the operand on the right
∧	Logical AND of the operands on both sides
∨	Logical OR of the operands on both sides
⊕	Exclusive logical OR of the operands on both sides
¬	NOT (logical complement)
( ), < >	Contents of operand

Note: General registers include 8-bit registers (R0H to R7H and R0L to R7L) and 16-bit registers (R0 to R7 and E0 to E7).

Condition Code Notation

Symbol	Description
↕	Changed according to execution result
*	Undetermined (no guaranteed value)
0	Cleared to 0
1	Set to 1
—	Not affected by execution of the instruction
Δ	Varies depending on conditions, described in notes

Table A.1 Instruction Set

1. Data transfer instructions

Mnemonic	Operand Size	Addressing Mode and Instruction Length (bytes)									Operation	Condition Code						No. of States*1	
		#xx	Rn	@ERn	@(d, ERn)	@–ERn/@ERn+	@aa	@(d, PC)	@@aa	—		I	H	N	Z	V	C	Normal	Advanced
MOV.B #xx:8, Rd	B	2									#xx:8 → Rd8	—	—	↕	↕	0	—	2	
MOV.B Rs, Rd	B		2								Rs8 → Rd8	—	—	↕	↕	0	—	2	
MOV.B @ERs, Rd	B			2							@ERs → Rd8	—	—	↕	↕	0	—	4	
MOV.B @(d:16, ERs), Rd	B				4						@(d:16, ERs) → Rd8	—	—	↕	↕	0	—	6	
MOV.B @(d:24, ERs), Rd	B				8						@(d:24, ERs) → Rd8	—	—	↕	↕	0	—	10	
MOV.B @ERs+, Rd	B					2					@ERs → Rd8 ERs32+1 → ERs32	—	—	↕	↕	0	—	6	
MOV.B @aa:8, Rd	B						2				@aa:8 → Rd8	—	—	↕	↕	0	—	4	
MOV.B @aa:16, Rd	B						4				@aa:16 → Rd8	—	—	↕	↕	0	—	6	
MOV.B @aa:24, Rd	B						6				@aa:24 → Rd8	—	—	↕	↕	0	—	8	
MOV.B Rs, @ERd	B			2							Rs8 → @ERd	—	—	↕	↕	0	—	4	
MOV.B Rs, @(d:16, ERd)	B				4						Rs8 → @(d:16, ERd)	—	—	↕	↕	0	—	6	
MOV.B Rs, @(d:24, ERd)	B				8						Rs8 → @(d:24, ERd)	—	—	↕	↕	0	—	10	
MOV.B Rs, @–ERd	B					2					ERd32–1 → ERd32 Rs8 → @ERd	—	—	↕	↕	0	—	6	
MOV.B Rs, @aa:8	B						2				Rs8 → @aa:8	—	—	↕	↕	0	—	4	
MOV.B Rs, @aa:16	B						4				Rs8 → @aa:16	—	—	↕	↕	0	—	6	
MOV.B Rs, @aa:24	B						6				Rs8 → @aa:24	—	—	↕	↕	0	—	8	
MOV.W #xx:16, Rd	W	4									#xx:16 → Rd16	—	—	↕	↕	0	—	4	
MOV.W Rs, Rd	W		2								Rs16 → Rd16	—	—	↕	↕	0	—	2	
MOV.W @ERs, Rd	W			2							@ERs → Rd16	—	—	↕	↕	0	—	4	
MOV.W @(d:16, ERs), Rd	W				4						@(d:16, ERs) → Rd16	—	—	↕	↕	0	—	6	
MOV.W @(d:24, ERs), Rd	W				8						@(d:24, ERs) → Rd16	—	—	↕	↕	0	—	10	
MOV.W @ERs+, Rd	W					2					@ERs → Rd16 ERs32+2 → @ERd32	—	—	↕	↕	0	—	6	
MOV.W @aa:16, Rd	W						4				@aa:16 → Rd16	—	—	↕	↕	0	—	6	

Mnemonic	Operand Size	Addressing Mode and Instruction Length (bytes)								Operation	Condition Code						No. of States*1	
		#xx	Rn	@ERn	@(d, ERn)	@–ERn/@ERn+	@aa	@(d, PC)	@@aa		I	H	N	Z	V	C	Normal	Advanced
MOV.W @aa:24, Rd	W						6			@aa:24 → Rd16	—	—	↕	↕	0	—	8	
MOV.W Rs, @ERd	W			2						Rs16 → @ERd	—	—	↕	↕	0	—	4	
MOV.W Rs, @(d:16, ERd)	W				4					Rs16 → @(d:16, ERd)	—	—	↕	↕	0	—	6	
MOV.W Rs, @(d:24, ERd)	W				8					Rs16 → @(d:24, ERd)	—	—	↕	↕	0	—	10	
MOV.W Rs, @–ERd	W					2				ERd32–2 → ERd32 Rs16 → @ERd	—	—	↕	↕	0	—	6	
MOV.W Rs, @aa:16	W						4			Rs16 → @aa:16	—	—	↕	↕	0	—	6	
MOV.W Rs, @aa:24	W						6			Rs16 → @aa:24	—	—	↕	↕	0	—	8	
MOV.L #xx:32, Rd	L	6								#xx:32 → Rd32	—	—	↕	↕	0	—	6	
MOV.L ERs, ERd	L		2							ERs32 → ERd32	—	—	↕	↕	0	—	2	
MOV.L @ERs, ERd	L			4						@ERs → ERd32	—	—	↕	↕	0	—	8	
MOV.L @(d:16, ERs), ERd	L				6					@(d:16, ERs) → ERd32	—	—	↕	↕	0	—	10	
MOV.L @(d:24, ERs), ERd	L				10					@(d:24, ERs) → ERd32	—	—	↕	↕	0	—	14	
MOV.L @ERs+, ERd	L					4				@ERs → ERd32 ERs32+4 → ERs32	—	—	↕	↕	0	—	10	
MOV.L @aa:16, ERd	L						6			@aa:16 → ERd32	—	—	↕	↕	0	—	10	
MOV.L @aa:24, ERd	L						8			@aa:24 → ERd32	—	—	↕	↕	0	—	12	
MOV.L ERs, @ERd	L			4						ERs32 → @ERd	—	—	↕	↕	0	—	8	
MOV.L ERs, @(d:16, ERd)	L				6					ERs32 → @(d:16, ERd)	—	—	↕	↕	0	—	10	
MOV.L ERs, @(d:24, ERd)	L				10					ERs32 → @(d:24, ERd)	—	—	↕	↕	0	—	14	
MOV.L ERs, @–ERd	L					4				ERd32–4 → ERd32 ERs32 → @ERd	—	—	↕	↕	0	—	10	
MOV.L ERs, @aa:16	L						6			ERs32 → @aa:16	—	—	↕	↕	0	—	10	
MOV.L ERs, @aa:24	L						8			ERs32 → @aa:24	—	—	↕	↕	0	—	12	
POP.W Rn	W								2	@SP → Rn16 SP+2 → SP	—	—	↕	↕	0	—	6	
POP.L ERn	L								4	@SP → ERn32 SP+4 → SP	—	—	↕	↕	0	—	10	

Mnemonic	Operand Size	Addressing Mode and Instruction Length (bytes) #xx	Rn	@ERn	@(d, ERn)	@–ERn/@ERn+	@aa	@(d, PC)	@@aa	|	Operation	Condition Code I	H	N	Z	V	C	No. of States※1 Normal	Advanced
PUSH.W Rn	W									2	SP–2 → SP Rn16 → @SP	—	—	↕	↕	0	—	6	
PUSH.L ERn	L									4	SP–4 → SP ERn32 → @SP	—	—	↕	↕	0	—	10	
MOVFPE @aa:16, Rd	B						4				Cannot be used in the H8/3008	Cannot be used in the H8/3008							
MOVTPE Rs, @aa:16	B						4				Cannot be used in the H8/3008	Cannot be used in the H8/3008							

2. Arithmetic instructions

Mnemonic	Operand Size	Addressing Mode and Instruction Length (bytes) #xx	Rn	@ERn	@(d, ERn)	@–ERn/@ERn+	@aa	@(d, PC)	@@aa	|	Operation	Condition Code I	H	N	Z	V	C	No. of States※1 Normal	Advanced
ADD.B #xx:8, Rd	B	2									Rd8+#xx:8 → Rd8	—	↕	↕	↕	↕	↕	2	
ADD.B Rs, Rd	B		2								Rd8+Rs8 → Rd8	—	↕	↕	↕	↕	↕	2	
ADD.W #xx:16, Rd	W	4									Rd16+#xx:16 → Rd16	—	(1)	↕	↕	↕	↕	4	
ADD.W Rs, Rd	W		2								Rd16+Rs16 → Rd16	—	(1)	↕	↕	↕	↕	2	
ADD.L #xx:32, ERd	L	6									ERd32+#xx:32 → ERd32	—	(2)	↕	↕	↕	↕	6	
ADD.L ERs, ERd	L		2								ERd32+ERs32 → ERd32	—	(2)	↕	↕	↕	↕	2	
ADDX.B #xx:8, Rd	B	2									Rd8+#xx:8 +C → Rd8	—	↕	↕	(3)	↕	↕	2	
ADDX.B Rs, Rd	B		2								Rd8+Rs8 +C → Rd8	—	↕	↕	(3)	↕	↕	2	
ADDS.L #1, ERd	L		2								ERd32+1 → ERd32	—	—	—	—	—	—	2	
ADDS.L #2, ERd	L		2								ERd32+2 → ERd32	—	—	—	—	—	—	2	
ADDS.L #4, ERd	L		2								ERd32+4 → ERd32	—	—	—	—	—	—	2	
INC.B Rd	B		2								Rd8+1 → Rd8	—	—	↕	↕	↕	—	2	
INC.W #1, Rd	W		2								Rd16+1 → Rd16	—	—	↕	↕	↕	—	2	
INC.W #2, Rd	W		2								Rd16+2 → Rd16	—	—	↕	↕	↕	—	2	

Mnemonic	Operand Size	Addressing Mode and Instruction Length (bytes) #xx	Rn	@ERn	@(d, ERn)	@–ERn/@ERn+	@aa	@(d, PC)	@@aa	—	Operation	Condition Code I	H	N	Z	V	C	No. of States*1 Normal	Advanced
INC.L #1, ERd	L		2								ERd32+1 → ERd32	—	—	↕	↕	↕	—	2	
INC.L #2, ERd	L		2								ERd32+2 → ERd32	—	—	↕	↕	↕	—	2	
DAA Rd	B		2								Rd8 decimal adjust → Rd8	—	*	↕	↕	*	—	2	
SUB.B Rs, Rd	B		2								Rd8–Rs8 → Rd8	—	↕	↕	↕	↕	↕	2	
SUB.W #xx:16, Rd	W	4									Rd16–#xx:16 → Rd16	—	(1)	↕	↕	↕	↕	4	
SUB.W Rs, Rd	W		2								Rd16–Rs16 → Rd16	—	(1)	↕	↕	↕	↕	2	
SUB.L #xx:32, ERd	L	6									ERd32–#xx:32 → ERd32	—	(2)	↕	↕	↕	↕	6	
SUB.L ERs, ERd	L		2								ERd32–ERs32 → ERd32	—	(2)	↕	↕	↕	↕	2	
SUBX.B #xx:8, Rd	B	2									Rd8–#xx:8–C → Rd8	—	↕	↕	(3)	↕	↕	2	
SUBX.B Rs, Rd	B		2								Rd8–Rs8–C → Rd8	—	↕	↕	(3)	↕	↕	2	
SUBS.L #1, ERd	L		2								ERd32–1 → ERd32	—	—	—	—	—	—	2	
SUBS.L #2, ERd	L		2								ERd32–2 → ERd32	—	—	—	—	—	—	2	
SUBS.L #4, ERd	L		2								ERd32–4 → ERd32	—	—	—	—	—	—	2	
DEC.B Rd	B		2								Rd8–1 → Rd8	—	—	↕	↕	↕	—	2	
DEC.W #1, Rd	W		2								Rd16–1 → Rd16	—	—	↕	↕	↕	—	2	
DEC.W #2, Rd	W		2								Rd16–2 → Rd16	—	—	↕	↕	↕	—	2	
DEC.L #1, ERd	L		2								ERd32–1 → ERd32	—	—	↕	↕	↕	—	2	
DEC.L #2, ERd	L		2								ERd32–2 → ERd32	—	—	↕	↕	↕	—	2	
DAS.Rd	B		2								Rd8 decimal adjust → Rd8	—	*	↕	↕	*	—	2	
MULXU. B Rs, Rd	B		2								Rd8 × Rs8 → Rd16 (unsigned multiplication)	—	—	—	—	—	—	14	
MULXU. W Rs, ERd	W		2								Rd16 × Rs16 → ERd32 (unsigned multiplication)	—	—	—	—	—	—	22	
MULXS. B Rs, Rd	B		4								Rd8 × Rs8 → Rd16 (signed multiplication)	—	—	↕	↕	—	—	16	
MULXS. W Rs, ERd	W		4								Rd16 × Rs16 → ERd32 (signed multiplication)	—	—	↕	↕	—	—	24	
DIVXU. B Rs, Rd	B		2								Rd16 ÷ Rs8 → Rd16 (RdH: remainder, RdL: quotient) (unsigned division)	—	—	(6)	(7)	—	—	14	

Mnemonic	Operand Size	Addressing Mode and Instruction Length (bytes) #xx	Rn	@ERn	@(d, ERn)	@–ERn/@ERn+	@aa	@(d, PC)	@@aa	|	Operation	Condition Code I	H	N	Z	V	C	No. of States*1 Normal	Advanced
DIVXU. W Rs, ERd	W		2								ERd32 ÷ Rs16 → ERd32 (Ed: remainder, Rd: quotient) (unsigned division)	—	—	(6)	(7)	—	—	22	
DIVXS. B Rs, Rd	B		4								Rd16 ÷ Rs8 → Rd16 (RdH: remainder, RdL: quotient) (signed division)	—	—	(8)	(7)	—	—	16	
DIVXS. W Rs, ERd	W		4								ERd32 ÷ Rs16 → ERd32 (Ed: remainder, Rd: quotient) (signed division)	—	—	(8)	(7)	—	—	24	
CMP.B #xx:8, Rd	B	2									Rd8–#xx:8	—	↕	↕	↕	↕	↕	2	
CMP.B Rs, Rd	B		2								Rd8–Rs8	—	↕	↕	↕	↕	↕	2	
CMP.W #xx:16, Rd	W	4									Rd16–#xx:16	—	(1)	↕	↕	↕	↕	4	
CMP.W Rs, Rd	W		2								Rd16–Rs16	—	(1)	↕	↕	↕	↕	2	
CMP.L #xx:32, ERd	L	6									ERd32–#xx:32	—	(2)	↕	↕	↕	↕	6	
CMP.L ERs, ERd	L		2								ERd32–ERs32	—	(2)	↕	↕	↕	↕	2	
NEG.B Rd	B		2								0–Rd8 → Rd8	—	↕	↕	↕	↕	↕	2	
NEG.W Rd	W		2								0–Rd16 → Rd16	—	↕	↕	↕	↕	↕	2	
NEG.L ERd	L		2								0–ERd32 → ERd32	—	↕	↕	↕	↕	↕	2	
EXTU.W Rd	W		2								0 → (<bits 15 to 8> of Rd16)	—	—	0	↕	0	—	2	
EXTU.L ERd	L		2								0 → (<bits 31 to 16> of ERd32)	—	—	0	↕	0	—	2	
EXTS.W Rd	W		2								(<bit 7> of Rd16) → (<bits 15 to 8> of Rd16)	—	—	↕	↕	0	—	2	
EXTS.L ERd	L		2								(<bit 15> of ERd32) → (<bits 31 to 16> of ERd32)	—	—	↕	↕	0	—	2	

3. Logic instructions

Mnemonic	Operand Size	Addressing Mode and Instruction Length (bytes) #xx	Rn	@ERn	@(d, ERn)	@–ERn/@ERn+	@aa	@(d, PC)	@@aa	—	Operation	Condition Code I	H	N	Z	V	C	No. of States※1 Normal	Advanced
AND.B #xx:8, Rd	B	2									Rd8∧#xx:8 → Rd8	—	—	↕	↕	0	—	2	
AND.B Rs, Rd	B		2								Rd8∧Rs8 → Rd8	—	—	↕	↕	0	—	2	
AND.W #xx:16, Rd	W	4									Rd16∧#xx:16 → Rd16	—	—	↕	↕	0	—	4	
AND.W Rs, Rd	W		2								Rd16∧Rs16 → Rd16	—	—	↕	↕	0	—	2	
AND.L #xx:32, ERd	L	6									ERd32∧#xx:32 → ERd32	—	—	↕	↕	0	—	6	
AND.L ERs, ERd	L		4								ERd32∧ERs32 → ERd32	—	—	↕	↕	0	—	4	
OR.B #xx:8, Rd	B	2									Rd8∨#xx:8 → Rd8	—	—	↕	↕	0	—	2	
OR.B Rs, Rd	B		2								Rd8∨Rs8 → Rd8	—	—	↕	↕	0	—	2	
OR.W #xx:16, Rd	W	4									Rd16∨#xx:16 → Rd16	—	—	↕	↕	0	—	4	
OR.W Rs, Rd	W		2								Rd16∨Rs16 → Rd16	—	—	↕	↕	0	—	2	
OR.L #xx:32, ERd	L	6									ERd32∨#xx:32 → ERd32	—	—	↕	↕	0	—	6	
OR.L ERs, ERd	L		4								ERd32∨ERs32 → ERd32	—	—	↕	↕	0	—	4	
XOR.B #xx:8, Rd	B	2									Rd8⊕#xx:8 → Rd8	—	—	↕	↕	0	—	2	
XOR.B Rs, Rd	B		2								Rd8⊕Rs8 → Rd8	—	—	↕	↕	0	—	2	
XOR.W #xx:16, Rd	W	4									Rd16⊕#xx:16 → Rd16	—	—	↕	↕	0	—	4	
XOR.W Rs, Rd	W		2								Rd16⊕Rs16 → Rd16	—	—	↕	↕	0	—	2	
XOR.L #xx:32, ERd	L	6									ERd32⊕#xx:32 → ERd32	—	—	↕	↕	0	—	6	
XOR.L ERs, ERd	L		4								ERd32⊕ERs32 → ERd32	—	—	↕	↕	0	—	4	
NOT.B Rd	B		2								¬Rd8 → Rd8	—	—	↕	↕	0	—	2	
NOT.W Rd	W		2								¬Rd16 → Rd16	—	—	↕	↕	0	—	2	
NOT.L ERd	L		2								¬Rd32 → Rd32	—	—	↕	↕	0	—	2	

4. Shift instructions

Mnemonic	Operand Size	Addressing Mode and Instruction Length (bytes) #xx	Rn	@ERn	@(d, ERn)	@–ERn/@ERn+	@aa	@(d, PC)	@@aa	—	Operation	Condition Code I	H	N	Z	V	C	No. of States*1 Normal	Advanced
SHAL.B Rd	B		2								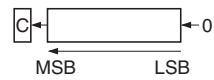	—	—	↕	↕	↕	↕	2	
SHAL.W Rd	W		2									—	—	↕	↕	↕	↕	2	
SHAL.L ERd	L		2									—	—	↕	↕	↕	↕	2	
SHAR.B Rd	B		2								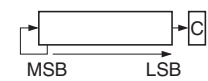	—	—	↕	↕	0	↕	2	
SHAR.W Rd	W		2									—	—	↕	↕	0	↕	2	
SHAR.L ERd	L		2									—	—	↕	↕	0	↕	2	
SHLL.B Rd	B		2								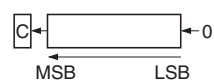	—	—	↕	↕	0	↕	2	
SHLL.W Rd	W		2									—	—	↕	↕	0	↕	2	
SHLL.L ERd	L		2									—	—	↕	↕	0	↕	2	
SHLR.B Rd	B		2								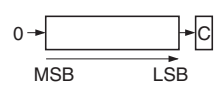	—	—	↕	↕	0	↕	2	
SHLR.W Rd	W		2									—	—	↕	↕	0	↕	2	
SHLR.L ERd	L		2									—	—	↕	↕	0	↕	2	
ROTXL.B Rd	B		2								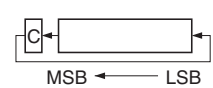	—	—	↕	↕	0	↕	2	
ROTXL.W Rd	W		2									—	—	↕	↕	0	↕	2	
ROTXL.L ERd	L		2									—	—	↕	↕	0	↕	2	
ROTXR.B Rd	B		2								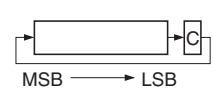	—	—	↕	↕	0	↕	2	
ROTXR.W Rd	W		2									—	—	↕	↕	0	↕	2	
ROTXR.L ERd	L		2									—	—	↕	↕	0	↕	2	
ROTL.B Rd	B		2								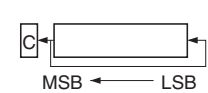	—	—	↕	↕	0	↕	2	
ROTL.W Rd	W		2									—	—	↕	↕	0	↕	2	
ROTL.L ERd	L		2									—	—	↕	↕	0	↕	2	
ROTR.B Rd	B		2								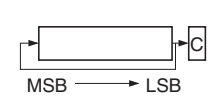	—	—	↕	↕	0	↕	2	
ROTR.W Rd	W		2									—	—	↕	↕	0	↕	2	
ROTR.L ERd	L		2									—	—	↕	↕	0	↕	2	

5. Bit manipulation instructions

Mnemonic	Operand Size	Addressing Mode and Instruction Length (bytes)									Operation	Condition Code						No. of States※1	
		#xx	Rn	@ERn	@(d, ERn)	@–ERn/@ERn+	@aa	@(d, PC)	@@aa	|		I	H	N	Z	V	C	Normal	Advanced
BSET #xx:3, Rd	B		2								(#xx:3 of Rd8) ← 1	—	—	—	—	—	—	2	
BSET #xx:3, @ERd	B			4							(#xx:3 of @ERd) ← 1	—	—	—	—	—	—	8	
BSET #xx:3, @aa:8	B						4				(#xx:3 of @aa:8) ← 1	—	—	—	—	—	—	8	
BSET Rn, Rd	B		2								(Rn8 of Rd8) ← 1	—	—	—	—	—	—	2	
BSET Rn, @ERd	B			4							(Rn8 of @ERd) ← 1	—	—	—	—	—	—	8	
BSET Rn, @aa:8	B						4				(Rn8 of @aa:8) ← 1	—	—	—	—	—	—	8	
BCLR #xx:3, Rd	B		2								(#xx:3 of Rd8) ← 0	—	—	—	—	—	—	2	
BCLR #xx:3, @ERd	B			4							(#xx:3 of @ERd) ← 0	—	—	—	—	—	—	8	
BCLR #xx:3, @aa:8	B						4				(#xx:3 of @aa:8) ← 0	—	—	—	—	—	—	8	
BCLR Rn, Rd	B		2								(Rn8 of Rd8) ← 0	—	—	—	—	—	—	2	
BCLR Rn, @ERd	B			4							(Rn8 of @ERd) ← 0	—	—	—	—	—	—	8	
BCLR Rn, @aa:8	B						4				(Rn8 of @aa:8) ← 0	—	—	—	—	—	—	8	
BNOT #xx:3, Rd	B		2								(#xx:3 of Rd8) ← ¬(#xx:3 of Rd8)	—	—	—	—	—	—	2	
BNOT #xx:3, @ERd	B			4							(#xx:3 of @ERd) ← ¬(#xx:3 of @ERd)	—	—	—	—	—	—	8	
BNOT #xx:3, @aa:8	B						4				(#xx:3 of @aa:8) ← ¬(#xx:3 of @aa:8)	—	—	—	—	—	—	8	
BNOT Rn, Rd	B		2								(Rn8 of Rd8) ← ¬(Rn8 of Rd8)	—	—	—	—	—	—	2	
BNOT Rn, @ERd	B			4							(Rn8 of @ERd) ← ¬(Rn8 of @ERd)	—	—	—	—	—	—	8	
BNOT Rn, @aa:8	B						4				(Rn8 of @aa:8) ← ¬(Rn8 of @aa:8)	—	—	—	—	—	—	8	
BTST #xx:3, Rd	B		2								¬(#xx:3 of Rd8) → Z	—	—	—	↕	—	—	2	
BTST #xx:3, @ERd	B			4							¬(#xx:3 of @ERd) → Z	—	—	—	↕	—	—	6	
BTST #xx:3, @aa:8	B						4				¬(#xx:3 of @aa:8) → Z	—	—	—	↕	—	—	6	
BTST Rn, Rd	B		2								¬(Rn8 of @Rd8) → Z	—	—	—	↕	—	—	2	
BTST Rn, @ERd	B			4							¬(Rn8 of @ERd) → Z	—	—	—	↕	—	—	6	
BTST Rn, @aa:8	B						4				¬(Rn8 of @aa:8) → Z	—	—	—	↕	—	—	6	
BLD #xx:3, Rd	B		2								(#xx:3 of Rd8) → C	—	—	—	—	—	↕	2	

Mnemonic	Operand Size	Addressing Mode and Instruction Length (bytes) #xx	Rn	@ERn	@(d, ERn)	@–ERn/@ERn+	@aa	@(d, PC)	@@aa	—	Operation	Condition Code I	H	N	Z	V	C	No. of States*1 Normal	Advanced
BLD #xx:3, @ERd	B			4							(#xx:3 of @ERd) → C	—	—	—	—	—	↕	6	
BLD #xx:3, @aa:8	B						4				(#xx:3 of @aa:8) → C	—	—	—	—	—	↕	6	
BILD #xx:3, Rd	B		2								¬(#xx:3 of Rd8) → C	—	—	—	—	—	↕	2	
BILD #xx:3, @ERd	B			4							¬(#xx:3 of @ERd) → C	—	—	—	—	—	↕	6	
BILD #xx:3, @aa:8	B						4				¬(#xx:3 of @aa:8) → C	—	—	—	—	—	↕	6	
BST #xx:3, Rd	B		2								C → (#xx:3 of Rd8)	—	—	—	—	—	—	2	
BST #xx:3, @ERd	B			4							C → (#xx:3 of @ERd24)	—	—	—	—	—	—	8	
BST #xx:3, @aa:8	B						4				C → (#xx:3 of @aa:8)	—	—	—	—	—	—	8	
BIST #xx:3, Rd	B		2								¬C → (#xx:3 of Rd8)	—	—	—	—	—	—	2	
BIST #xx:3, @ERd	B			4							¬C → (#xx:3 of @ERd24)	—	—	—	—	—	—	8	
BIST #xx:3, @aa:8	B						4				¬C → (#xx:3 of @aa:8)	—	—	—	—	—	—	8	
BAND #xx:3, Rd	B		2								C∧(#xx:3 of Rd8) → C	—	—	—	—	—	↕	2	
BAND #xx:3, @ERd	B			4							C∧(#xx:3 of @ERd24) → C	—	—	—	—	—	↕	6	
BAND #xx:3, @aa:8	B						4				C∧(#xx:3 of @aa:8) → C	—	—	—	—	—	↕	6	
BIAND #xx:3, Rd	B		2								C∧ ¬ (#xx:3 of Rd8) → C	—	—	—	—	—	↕	2	
BIAND #xx:3, @ERd	B			4							C∧ ¬ (#xx:3 of @ERd24) → C	—	—	—	—	—	↕	6	
BIAND #xx:3, @aa:8	B						4				C∧ ¬ (#xx:3 of @aa:8) → C	—	—	—	—	—	↕	6	
BOR #xx:3, Rd	B		2								C∨(#xx:3 of Rd8) → C	—	—	—	—	—	↕	2	
BOR #xx:3, @ERd	B			4							C∨(#xx:3 of @ERd24) → C	—	—	—	—	—	↕	6	
BOR #xx:3, @aa:8	B						4				C∨(#xx:3 of @aa:8) → C	—	—	—	—	—	↕	6	
BIOR #xx:3, Rd	B		2								C∨ ¬ (#xx:3 of Rd8) → C	—	—	—	—	—	↕	2	
BIOR #xx:3, @ERd	B			4							C∨¬ (#xx:3 of @ERd24) → C	—	—	—	—	—	↕	6	
BIOR #xx:3, @aa:8	B						4				C∨ ¬ (#xx:3 of @aa:8) → C	—	—	—	—	—	↕	6	
BXOR #xx:3, Rd	B		2								C⊕(#xx:3 of Rd8) → C	—	—	—	—	—	↕	2	
BXOR #xx:3, @ERd	B			4							C⊕(#xx:3 of @ERd24) → C	—	—	—	—	—	↕	6	
BXOR #xx:3, @aa:8	B						4				C⊕(#xx:3 of @aa:8) → C	—	—	—	—	—	↕	6	
BIXOR #xx:3, Rd	B		2								C⊕ ¬ (#xx:3 of Rd8) → C	—	—	—	—	—	↕	2	
BIXOR #xx:3, @ERd	B			4							C⊕ ¬ (#xx:3 of @ERd24) → C	—	—	—	—	—	↕	6	
BIXOR #xx:3, @aa:8	B						4				C⊕ ¬ (#xx:3 of @aa:8) → C	—	—	—	—	—	↕	6	

6. Branching instructions

Mnemonic	Operand Size	Addressing Mode and Instruction Length (bytes)								Operation	Branch Condition	Condition Code						No. of States※1	
		#xx	Rn	@ERn	@(d, ERn)	@–ERn/@ERn+	@aa	@(d, PC)	@@aa			I	H	N	Z	V	C	Normal	Advanced
BRA d:8 (BT d:8)	—							2		If condition is true then PC ← PC+d else next;	Always	—	—	—	—	—	—	4	
BRA d:16 (BT d:16)	—							4				—	—	—	—	—	—	6	
BRN d:8 (BF d:8)	—							2			Never	—	—	—	—	—	—	4	
BRN d:16 (BF d:16)	—							4				—	—	—	—	—	—	6	
BHI d:8	—							2			C ∨ Z = 0	—	—	—	—	—	—	4	
BHI d:16	—							4				—	—	—	—	—	—	6	
BLS d:8	—							2			C ∨ Z = 1	—	—	—	—	—	—	4	
BLS d:16	—							4				—	—	—	—	—	—	6	
BCC d:8 (BHS d:8)	—							2			C = 0	—	—	—	—	—	—	4	
BCC d:16 (BHS d:16)	—							4				—	—	—	—	—	—	6	
BCS d:8 (BLO d:8)	—							2			C = 1	—	—	—	—	—	—	4	
BCS d:16 (BLO d:16)	—							4				—	—	—	—	—	—	6	
BNE d:8	—							2			Z = 0	—	—	—	—	—	—	4	
BNE d:16	—							4				—	—	—	—	—	—	6	
BEQ d:8	—							2			Z = 1	—	—	—	—	—	—	4	
BEQ d:16	—							4				—	—	—	—	—	—	6	
BVC d:8	—							2			V = 0	—	—	—	—	—	—	4	
BVC d:16	—							4				—	—	—	—	—	—	6	
BVS d:8	—							2			V = 1	—	—	—	—	—	—	4	
BVS d:16	—							4				—	—	—	—	—	—	6	
BPL d:8	—							2			N = 0	—	—	—	—	—	—	4	
BPL d:16	—							4				—	—	—	—	—	—	6	
BMI d:8	—							2			N = 1	—	—	—	—	—	—	4	
BMI d:16	—							4				—	—	—	—	—	—	6	
BGE d:8	—							2			N⊕V = 0	—	—	—	—	—	—	4	
BGE d:16	—							4				—	—	—	—	—	—	6	
BLT d:8	—							2			N⊕V = 1	—	—	—	—	—	—	4	
BLT d:16	—							4				—	—	—	—	—	—	6	
BGT d:8	—							2			Z ∨ (N⊕V) = 0	—	—	—	—	—	—	4	
BGT d:16	—							4				—	—	—	—	—	—	6	

Mnemonic	Operand Size	Addressing Mode and Instruction Length (bytes) #xx	Rn	@ERn	@(d, ERn)	@–ERn/@ERn+	@aa	@(d, PC)	@@aa	|	Operation	Branch Condition	Condition Code I	H	N	Z	V	C	No. of States*1 Normal	Advanced
BLE d:8	—							2			If condition is true then PC ← PC+d else next;	Z ∨ (N⊕V) = 1	—	—	—	—	—	—	4	
BLE d:16	—							4					—	—	—	—	—	—	6	
JMP @ERn	—			2							PC ← ERn		—	—	—	—	—	—	4	
JMP @aa:24	—						4				PC ← aa:24		—	—	—	—	—	—	6	
JMP @@aa:8	—								2		PC ← @aa:8		—	—	—	—	—	—	8	10
BSR d:8	—							2			PC → @–SP PC ← PC+d:8		—	—	—	—	—	—	6	8
BSR d:16	—							4			PC → @–SP PC ← PC+d:16		—	—	—	—	—	—	8	10
JSR @ERn	—			2							PC → @–SP PC ← @ERn		—	—	—	—	—	—	6	8
JSR @aa:24	—						4				PC → @–SP PC ← @aa:24		—	—	—	—	—	—	8	10
JSR @@aa:8	—								2		PC → @–SP PC ← @aa:8		—	—	—	—	—	—	8	12
RTS	—									2	PC ← @SP+		—	—	—	—	—	—	8	10

7. System control instructions

Mnemonic	Operand Size	Addressing Mode and Instruction Length (bytes)								Operation	Condition Code						No. of States※1	
		#xx	Rn	@ERn	@(d, ERn)	@–ERn/@ERn+	@aa	@(d, PC)	@@aa		I	H	N	Z	V	C	Normal	Advanced
TRAPA #x:2	—									2	PC → @–SP CCR → @–SP <vector> → PC	1	—	—	—	—	—	14	16
RTE	—										CCR ← @SP+ PC ← @SP+	↕	↕	↕	↕	↕	↕	10	
SLEEP	—										Transition to powerdown state	—	—	—	—	—	—	2	
LDC #xx:8, CCR	B	2									#xx:8 → CCR	↕	↕	↕	↕	↕	↕	2	
LDC Rs, CCR	B		2								Rs8 → CCR	↕	↕	↕	↕	↕	↕	2	
LDC @ERs, CCR	W			4							@ERs → CCR	↕	↕	↕	↕	↕	↕	6	
LDC @(d:16, ERs), CCR	W				6						@(d:16, ERs) → CCR	↕	↕	↕	↕	↕	↕	8	
LDC @(d:24, ERs), CCR	W				10						@(d:24, ERs) → CCR	↕	↕	↕	↕	↕	↕	12	
LDC @ERs+, CCR	W					4					@ERs → CCR ERs32+2 → ERs32	↕	↕	↕	↕	↕	↕	8	
LDC @aa:16, CCR	W						6				@aa:16 → CCR	↕	↕	↕	↕	↕	↕	8	
LDC @aa:24, CCR	W						8				@aa:24 → CCR	↕	↕	↕	↕	↕	↕	10	
STC CCR, Rd	B		2								CCR → Rd8	—	—	—	—	—	—	2	
STC CCR, @ERd	W			4							CCR → @ERd	—	—	—	—	—	—	6	
STC CCR, @(d:16, ERd)	W				6						CCR → @(d:16, ERd)	—	—	—	—	—	—	8	
STC CCR, @(d:24, ERd)	W				10						CCR → @(d:24, ERd)	—	—	—	—	—	—	12	
STC CCR, @–ERd	W					4					ERd32–2 → ERd32 CCR → @ERd	—	—	—	—	—	—	8	
STC CCR, @aa:16	W						6				CCR → @aa:16	—	—	—	—	—	—	8	
STC CCR, @aa:24	W						8				CCR → @aa:24	—	—	—	—	—	—	10	
ANDC #xx:8, CCR	B	2									CCR∧#xx:8 → CCR	↕	↕	↕	↕	↕	↕	2	
ORC #xx:8, CCR	B	2									CCR∨#xx:8 → CCR	↕	↕	↕	↕	↕	↕	2	
XORC #xx:8, CCR	B	2									CCR⊕#xx:8 → CCR	↕	↕	↕	↕	↕	↕	2	
NOP	—									2	PC ← PC+2	—	—	—	—	—	—	2	

8. Block transfer instructions

Mnemonic	Operand Size	Addressing Mode and Instruction Length (bytes) #xx	Rn	@ERn	@(d, ERn)	@–ERn/@ERn+	@aa	@(d, PC)	@@aa	|	Operation	Condition Code I	H	N	Z	V	C	No. of States*1 Normal	Advanced
EEPMOV. B	—									4	if R4L ≠ 0 repeat @R5 → @R6 R5+1 → R5 R6+1 → R6 R4L–1 → R4L until R4L=0 else next;	—	—	—	—	—	—	8+4n*2	
EEPMOV. W	—									4	if R4 ≠ 0 repeat @R5 → @R6 R5+1 → R5 R6+1 → R6 R4–1 → R4 until R4L=0 else next;	—	—	—	—	—	—	8+4n*2	

Notes: 1. The number of states is the number of states required for execution when the instruction and its operands are located in on-chip memory. For other cases see section A.3, Number of States Required for Execution.

2. n is the value set in register R4L or R4.

(1) Set to 1 when a carry or borrow occurs at bit 11; otherwise cleared to 0.

(2) Set to 1 when a carry or borrow occurs at bit 27; otherwise cleared to 0.

(3) Retains its previous value when the result is zero; otherwise cleared to 0.

(4) Set to 1 when the adjustment produces a carry; otherwise retains its previous value.

(5) The number of states required for execution of an instruction that transfers data in synchronization with the E clock is variable.

(6) Set to 1 when the divisor is negative; otherwise cleared to 0.

(7) Set to 1 when the divisor is zero; otherwise cleared to 0.

(8) Set to 1 when the quotient is negative; otherwise cleared to 0.

A.2 Operation Code Maps

Table A.2 Operation Code Map (1)

Instruction code:

1st byte		2nd byte	
AH	AL	BH	BL

Instruction when most significant bit of BH is 0.

Instruction when most significant bit of BH is 1.

AH \ AL	0	1	2	3	4	5	6	7	8	9	A	B	C	D	E	F
0	NOP	Table A.2 (2)	STC	LDC	ORC	XORC	ANDC	LDC	ADD		Table A.2 (2)	Table A.2 (2)	MOV		ADDX	Table A.2 (2)
1	Table A.2 (2)	Table A.2 (2)	Table A.2 (2)	Table A.2 (2)	OR.B	XOR.B	AND.B	Table A.2 (2)	SUB		Table A.2 (2)	Table A.2 (2)	CMP		SUBX	Table A.2 (2)
2	MOV.B															
3																
4	BRA	BRN	BHI	BLS	BCC	BCS	BNE	BNQ	BVC	BVS	BPL	BMI	BGE	BLT	BGT	BLE
5	MULXU	DIVXU	MULXU	DIVXU	RTS	BSR	RTE	TRAPA	Table A.2 (2)	JMP			BSR	JSR		
6	BSET	BNOT	BCLR	BTST	OR	XOR	AND	BST / BIST	MOV	MOV					Table A.2 (3)	
7					BOR / BIOR	BXOR / BIXOR	BAND / BIAND	BLD / BILD		Table A.2 (2)	Table A.2 (2)	EEPMOV				
8	ADD															
9	ADDX															
A	CMP															
B	SUBX															
C	OR															
D	XOR															
E	AND															
F	MOV															

Table A.2 Operation Code Map (2)

Instruction code:

1st byte		2nd byte	
AH	AL	BH	BL

AH AL \ BH	0	1	2	3	4	5	6	7	8	9	A	B	C	D	E	F
01	MOV				LDC/STC				SLEEP				Table A.2 (3)	Table A.2 (3)		Table A.2 (3)
0A	INC								ADD							
0B	ADDS					INC		INC	ADDS					INC		INC
0F	DAA								MOV							
10	SHLL			SHLL					SHAL			SHAL				
11	SHLR			SHLR					SHAR			SHAR				
12	ROTXL			ROTXL					ROTL			ROTL				
13	ROTXR			ROTXR					ROTR			ROTR				
17	NOT			NOT		EXTU		EXTU	NEG			NEG		EXTS		EXTS
1A	DEC								SUB							
1B	SUBS					DEC		DEC	SUBS					DEC		DEC
1F	DAS								CMP							
58	BRA	BRN	BHI	BLS	BCC	BCS	BNE	BEQ	BVC	BVS	BPL	BMI	BGE	BLT	BGT	BLE
79	MOV	ADD	CMP	SUB	OR	XOR	AND									
7A	MOV	ADD	CMP	SUB	OR	XOR	AND									

Table A.2 Operation Code Map (3)

Instruction code:

1st byte	2nd byte	3rd byte	4th byte
AH / AL	BH / BL	CH / CL	DH / DL

Instruction when most significant bit of DH is 0.

Instruction when most significant bit of DH is 1.

AH / ALBH / BLCH \ CL	0	1	2	3	4	5	6	7	8	9	A	B	C	D	E	F
01406										LDC / STC		LDC / STC		LDC / STC		LDC / STC
01C05	MULXS		MULXS													
01D05		DIVXS		DIVXS												
01F06					OR	XOR	AND									
7Cr06 *1				BTST												
7Cr07 *1				BTST	BOR / BIOR	BXOR / BIXOR	BAND / BIAND	BLD / BILD								
7Dr06 *1	BSET	BNOT	BCLR					BST / BIST								
7Dr07 *1	BSET	BNOT	BCLR													
7Eaa6 *2				BTST												
7Eaa7 *2				BTST	BOR / BIOR	BXOR / BIXOR	BAND / BIAND	BLD / BILD								
7Faa6 *2	BSET	BNOT	BCLR					BST / BIST								
7Faa7 *2	BSET	BNOT	BCLR													

Notes: 1. r is the register designation field.
2. aa is the absolute address field.

A.3 Number of States Required for Execution

The tables in this section can be used to calculate the number of states required for instruction execution by the H8/300H CPU. Table A.4 indicates the number of instruction fetch, data read/write, and other cycles occurring in each instruction. Table A.3 indicates the number of states required per cycle according to the bus size. The number of states required for execution of an instruction can be calculated from these two tables as follows:

Number of states = $I \times S_I + J \times S_J + K \times S_K + L \times S_L + M \times S_M + N \times S_N$

Examples of Calculation of Number of States Required for Execution

Examples: Advanced mode, stack located in external address space, on-chip supporting modules accessed with 8-bit bus width, external devices accessed in three states with one wait state and 16-bit bus width.

BSET #0, @FFFFC7:8

From table A.4, I = L = 2 and J = K = M = N = 0
From table A.3, $S_I = 4$ and $S_L = 3$
Number of states = $2 \times 4 + 2 \times 3 = 14$

JSR @@30

From table A.4, I = J = K = 2 and L = M = N = 0
From table A.3, $S_I = S_J = S_K = 4$
Number of states = $2 \times 4 + 2 \times 4 + 2 \times 4 = 24$

Table A.3 Number of States per Cycle

		Access Conditions						
			On-Chip Supporting Module		External Device			
					8-Bit Bus		16-Bit Bus	
Cycle		**On-Chip Memory**	**8-Bit Bus**	**16-Bit Bus**	**2-State Access**	**3-State Access**	**2-State Access**	**3-State Access**
Instruction fetch	S_I	2	6	3	4	6 + 2m	2	3 + m
Branch address read	S_J							
Stack operation	S_K							
Byte data access	S_L		3		2	3 + m		
Word data access	S_M		6		4	6 + 2m		
Internal operation	S_N	1						

Legend:

m: Number of wait states inserted into external device access

Table A.4 Number of Cycles per Instruction

Instruction	Mnemonic	Instruction Fetch I	Branch Addr. Read J	Stack Operation K	Byte Data Access L	Word Data Access M	Internal Operation N
ADD	ADD.B #xx:8, Rd	1					
	ADD.B Rs, Rd	1					
	ADD.W #xx:16, Rd	2					
	ADD.W Rs, Rd	1					
	ADD.L #xx:32, ERd	3					
	ADD.L ERs, ERd	1					
ADDS	ADDS #1/2/4, ERd	1					
ADDX	ADDX #xx:8, Rd	1					
	ADDX Rs, Rd	1					
AND	AND.B #xx:8, Rd	1					
	AND.B Rs, Rd	1					
	AND.W #xx:16, Rd	2					
	AND.W Rs, Rd	1					
	AND.L #xx:32, ERd	3					
	AND.L ERs, ERd	2					
ANDC	ANDC #xx:8, CCR	1					
BAND	BAND #xx:3, Rd	1					
	BAND #xx:3, @ERd	2			1		
	BAND #xx:3, @aa:8	2			1		
Bcc	BRA d:8 (BT d:8)	2					
	BRN d:8 (BF d:8)	2					
	BHI d:8	2					
	BLS d:8	2					
	BCC d:8 (BHS d:8)	2					
	BCS d:8 (BLO d:8)	2					
	BNE d:8	2					
	BEQ d:8	2					
	BVC d:8	2					
	BVS d:8	2					
	BPL d:8	2					
	BMI d:8	2					
	BGE d:8	2					
	BLT d:8	2					
	BGT d:8	2					
	BLE d:8	2					

Instruction	Mnemonic	Instruction Fetch I	Branch Addr. Read J	Stack Operation K	Byte Data Access L	Word Data Access M	Internal Operation N
Bcc	BRA d:16 (BT d:16)	2					2
	BRN d:16 (BF d:16)	2					2
	BHI d:16	2					2
	BLS d:16	2					2
	BCC d:16 (BHS d:16)	2					2
	BCS d:16 (BLO d:16)	2					2
	BNE d:16	2					2
	BEQ d:16	2					2
	BVC d:16	2					2
	BVS d:16	2					2
	BPL d:16	2					2
	BMI d:16	2					2
	BGE d:16	2					2
	BLT d:16	2					2
	BGT d:16	2					2
	BLE d:16	2					2
BCLR	BCLR #xx:3, Rd	1					
	BCLR #xx:3, @ERd	2			2		
	BCLR #xx:3, @aa:8	2			2		
	BCLR Rn, Rd	1					
	BCLR Rn, @ERd	2			2		
	BCLR Rn, @aa:8	2			2		
BIAND	BIAND #xx:3, Rd	1					
	BIAND #xx:3, @ERd	2			1		
	BIAND #xx:3, @aa:8	2			1		
BILD	BILD #xx:3, Rd	1					
	BILD #xx:3, @ERd	2			1		
	BILD #xx:3, @aa:8	2			1		
BIOR	BIOR #xx:8, Rd	1					
	BIOR #xx:8, @ERd	2			1		
	BIOR #xx:8, @aa:8	2			1		
BIST	BIST #xx:3, Rd	1					
	BIST #xx:3, @ERd	2			2		
	BIST #xx:3, @aa:8	2			2		
BIXOR	BIXOR #xx:3, Rd	1					
	BIXOR #xx:3, @ERd	2			1		
	BIXOR #xx:3, @aa:8	2			1		
BLD	BLD #xx:3, Rd	1					
	BLD #xx:3, @ERd	2			1		
	BLD #xx:3, @aa:8	2			1		

Instruction	Mnemonic		Instruction Fetch I	Branch Addr. Read J	Stack Operation K	Byte Data Access L	Word Data Access M	Internal Operation N
BNOT	BNOT #xx:3, Rd		1					
	BNOT #xx:3, @ERd		2			2		
	BNOT #xx:3, @aa:8		2			2		
	BNOT Rn, Rd		1					
	BNOT Rn, @ERd		2			2		
	BNOT Rn, @aa:8		2			2		
BOR	BOR #xx:3, Rd		1					
	BOR #xx:3, @ERd		2			1		
	BOR #xx:3, @aa:8		2			1		
BSET	BSET #xx:3, Rd		1					
	BSET #xx:3, @ERd		2			2		
	BSET #xx:3, @aa:8		2			2		
	BSET Rn, Rd		1					
	BSET Rn, @ERd		2			2		
	BSET Rn, @aa:8		2			2		
BSR	BSR d:8	Normal	2		1			
		Advanced	2		2			
	BSR d:16	Normal	2		1			2
		Advanced	2		2			2
BST	BST #xx:3, Rd		1					
	BST #xx:3, @ERd		2			2		
	BST #xx:3, @aa:8		2			2		
BTST	BTST #xx:3, Rd		1					
	BTST #xx:3, @ERd		2			1		
	BTST #xx:3, @aa:8		2			1		
	BTST Rn, Rd		1					
	BTST Rn, @ERd		2			1		
	BTST Rn, @aa:8		2			1		
BXOR	BXOR #xx:3, Rd		1					
	BXOR #xx:3, @ERd		2			1		
	BXOR #xx:3, @aa:8		2			1		
CMP	CMP.B #xx:8, Rd		1					
	CMP.B Rs, Rd		1					
	CMP.W #xx:16, Rd		2					
	CMP.W Rs, Rd		1					
	CMP.L #xx:32, ERd		3					
	CMP.L ERs, ERd		1					
DAA	DAA Rd		1					
DAS	DAS Rd		1					

Instruction	Mnemonic		Instruction Fetch I	Branch Addr. Read J	Stack Operation K	Byte Data Access L	Word Data Access M	Internal Operation N
DEC	DEC.B Rd		1					
	DEC.W #1/2, Rd		1					
	DEC.L #1/2, ERd		1					
DIVXS	DIVXS.B Rs, Rd		2					12
	DIVXS.W Rs, ERd		2					20
DIVXU	DIVXU.B Rs, Rd		1					12
	DIVXU.W Rs, ERd		1					20
EEPMOV	EEPMOV.B		2			2n + 2*[1]		
	EEPMOV.W		2			2n + 2*[1]		
EXTS	EXTS.W Rd		1					
	EXTS.L ERd		1					
EXTU	EXTU.W Rd		1					
	EXTU.L ERd		1					
INC	INC.B Rd		1					
	INC.W #1/2, Rd		1					
	INC.L #1/2, ERd		1					
JMP	JMP @ERn		2					
	JMP @aa:24		2					2
	JMP @@aa:8	Normal	2	1				2
		Advanced	2	2				2
JSR	JSR @ERn	Normal	2		1			
		Advanced	2		2			
	JSR @aa:24	Normal	2		1			2
		Advanced	2		2			2
	JSR @@aa:8	Normal	2	1	1			
		Advanced	2	2	2			
LDC	LDC #xx:8, CCR		1					
	LDC Rs, CCR		1					
	LDC @ERs, CCR		2				1	
	LDC @(d:16, ERs), CCR		3				1	
	LDC @(d:24, ERs), CCR		5				1	
	LDC @ERs+, CCR		2				1	2
	LDC @aa:16, CCR		3				1	
	LDC @aa:24, CCR		4				1	

Instruction	Mnemonic	Instruction Fetch I	Branch Addr. Read J	Stack Operation K	Byte Data Access L	Word Data Access M	Internal Operation N
MOV	MOV.B #xx:8, Rd	1					
	MOV.B Rs, Rd	1					
	MOV.B @ERs, Rd	1			1		
	MOV.B @(d:16, ERs), Rd	2			1		
	MOV.B @(d:24, ERs), Rd	4			1		
	MOV.B @ERs+, Rd	1			1		2
	MOV.B @aa:8, Rd	1			1		
	MOV.B @aa:16, Rd	2			1		
	MOV.B @aa:24, Rd	3			1		
	MOV.B Rs, @ERd	1			1		
	MOV.B Rs, @(d:16, ERd)	2			1		
	MOV.B Rs, @(d:24, ERd)	4			1		
	MOV.B Rs, @–ERd	1			1		2
	MOV.B Rs, @aa:8	1			1		
	MOV.B Rs, @aa:16	2			1		
	MOV.B Rs, @aa:24	3			1		
	MOV.W #xx:16, Rd	2					
	MOV.W Rs, Rd	1					
	MOV.W @ERs, Rd	1				1	
	MOV.W @(d:16, ERs), Rd	2				1	
	MOV.W @(d:24, ERs), Rd	4				1	
	MOV.W @ERs+, Rd	1				1	2
	MOV.W @aa:16, Rd	2				1	
	MOV.W @aa:24, Rd	3				1	
	MOV.W Rs, @ERd	1				1	
	MOV.W Rs, @(d:16, ERd)	2				1	
	MOV.W Rs, @(d:24, ERd)	4				1	
	MOV.W Rs, @–ERd	1				1	2
	MOV.W Rs, @aa:16	2				1	
	MOV.W Rs, @aa:24	3				1	
	MOV.L #xx:32, ERd	3					
	MOV.L ERs, ERd	1					
	MOV.L @ERs, ERd	2				2	
	MOV.L @(d:16, ERs), ERd	3				2	
	MOV.L @(d:24, ERs), ERd	5				2	
	MOV.L @ERs+, ERd	2				2	2
	MOV.L @aa:16, ERd	3				2	
	MOV.L @aa:24, ERd	4				2	
	MOV.L ERs, @ERd	2				2	
	MOV.L ERs, @(d:16, ERd)	3				2	
	MOV.L ERs, @(d:24, ERd)	5				2	
	MOV.L ERs, @–ERd	2				2	2
	MOV.L ERs, @aa:16	3				2	
	MOV.L ERs, @aa:24	4				2	

Instruction	Mnemonic	Instruction Fetch I	Branch Addr. Read J	Stack Operation K	Byte Data Access L	Word Data Access M	Internal Operation N
MOVFPE	MOVFPE @aa:16, Rd*2	2			1		
MOVTPE	MOVTPE Rs, @aa:16*2	2			1		
MULXS	MULXS.B Rs, Rd	2					12
	MULXS.W Rs, ERd	2					20
MULXU	MULXU.B Rs, Rd	1					12
	MULXU.W Rs, ERd	1					20
NEG	NEG.B Rd	1					
	NEG.W Rd	1					
	NEG.L ERd	1					
NOP	NOP	1					
NOT	NOT.B Rd	1					
	NOT.W Rd	1					
	NOT.L ERd	1					
OR	OR.B #xx:8, Rd	1					
	OR.B Rs, Rd	1					
	OR.W #xx:16, Rd	2					
	OR.W Rs, Rd	1					
	OR.L #xx:32, ERd	3					
	OR.L ERs, ERd	2					
ORC	ORC #xx:8, CCR	1					
POP	POP.W Rn	1				1	2
	POP.L ERn	2				2	2
PUSH	PUSH.W Rn	1				1	2
	PUSH.L ERn	2				2	2
ROTL	ROTL.B Rd	1					
	ROTL.W Rd	1					
	ROTL.L ERd	1					
ROTR	ROTR.B Rd	1					
	ROTR.W Rd	1					
	ROTR.L ERd	1					
ROTXL	ROTXL.B Rd	1					
	ROTXL.W Rd	1					
	ROTXL.L ERd	1					
ROTXR	ROTXR.B Rd	1					
	ROTXR.W Rd	1					
	ROTXR.L ERd	1					
RTE	RTE	2		2			2

Instruction	Mnemonic		Instruction Fetch I	Branch Addr. Read J	Stack Operation K	Byte Data Access L	Word Data Access M	Internal Operation N
RTS	RTS	Normal	2		1			2
		Advanced	2		2			2
SHAL	SHAL.B Rd		1					
	SHAL.W Rd		1					
	SHAL.L ERd		1					
SHAR	SHAR.B Rd		1					
	SHAR.W Rd		1					
	SHAR.L ERd		1					
SHLL	SHLL.B Rd		1					
	SHLL.W Rd		1					
	SHLL.L ERd		1					
SHLR	SHLR.B Rd		1					
	SHLR.W Rd		1					
	SHLR.L ERd		1					
SLEEP	SLEEP		1					
STC	STC CCR, Rd		1					
	STC CCR, @ERd		2				1	
	STC CCR, @(d:16, ERd)		3				1	
	STC CCR, @(d:24, ERd)		5				1	
	STC CCR, @–ERd		2				1	2
	STC CCR, @aa:16		3				1	
	STC CCR, @aa:24		4				1	
SUB	SUB.B Rs, Rd		1					
	SUB.W #xx:16, Rd		2					
	SUB.W Rs, Rd		1					
	SUB.L #xx:32, ERd		3					
	SUB.L ERs, ERd		1					
SUBS	SUBS #1/2/4, ERd		1					
SUBX	SUBX #xx:8, Rd		1					
	SUBX Rs, Rd		1					
TRAPA	TRAPA #x:2	Normal	2	1	2			4
		Advanced	2	2	2			4
XOR	XOR.B #xx:8, Rd		1					
	XOR.B Rs, Rd		1					
	XOR.W #xx:16, Rd		2					
	XOR.W Rs, Rd		1					
	XOR.L #xx:32, ERd		3					
	XOR.L ERs, ERd		2					
XORC	XORC #xx:8, CCR		1					

Notes: 1. n is the value set in register R4L or R4. The source and destination are accessed n + 1 times each.

2. Not available in the H8/3008.

Appendix B Internal I/O Registers

B.1 Address List

Address (Low)	Register Name	Data Bus Width	Bit Names Bit 7	Bit 6	Bit 5	Bit 4	Bit 3	Bit 2	Bit 1	Bit 0	Module Name
H'EE000	—		—	—	—	—	—	—	—	—	
H'EE001	—		—	—	—	—	—	—	—	—	
H'EE002	—		—	—	—	—	—	—	—	—	
H'EE003	P4DDR	8	$P4_7$DDR	$P4_6$DDR	$P4_5$DDR	$P4_4$DDR	$P4_3$DDR	$P4_2$DDR	$P4_1$DDR	$P4_0$DDR	Port 4
H'EE004	—		—	—	—	—	—	—	—	—	
H'EE005	P6DDR	8	—	$P6_6$DDR	$P6_5$DDR	$P6_4$DDR	$P6_3$DDR	$P6_2$DDR	$P6_1$DDR	$P6_0$DDR	Port 6
H'EE006	—		—	—	—	—	—	—	—	—	
H'EE007	P8DDR	8	—	—	—	$P8_4$DDR	$P8_3$DDR	$P8_2$DDR	$P8_1$DDR	$P8_0$DDR	Port 8
H'EE008	P9DDR	8	—	—	$P9_5$DDR	$P9_4$DDR	$P9_3$DDR	$P9_2$DDR	$P9_1$DDR	$P9_0$DDR	Port 9
H'EE009	PADDR	8	PA_7DDR	PA_6DDR	PA_5DDR	PA_4DDR	PA_3DDR	PA_2DDR	PA_1DDR	PA_0DDR	Port A
H'EE00A	PBDDR	8	PB_7DDR	PB_6DDR	PB_5DDR	PB_4DDR	PB_3DDR	PB_2DDR	PB_1DDR	PB_0DDR	Port B
H'EE00B	—		—	—	—	—	—	—	—	—	
H'EE00C	—		—	—	—	—	—	—	—	—	
H'EE00D	—		—	—	—	—	—	—	—	—	
H'EE00E	—		—	—	—	—	—	—	—	—	
H'EE00F	—		—	—	—	—	—	—	—	—	
H'EE010	—		—	—	—	—	—	—	—	—	
H'EE011	MDCR	8	—	—	—	—	—	MDS2	MDS1	MDS0	System control
H'EE012	SYSCR	8	SSBY	STS2	STS1	STS0	UE	NMIEG	SSOE	RAME	
H'EE013	BRCR	8	A23E	A22E	A21E	A20E	—	—	—	BRLE	Bus controller
H'EE014	ISCR	8	—	—	IRQ5SC	IRQ4SC	IRQ3SC	IRQ2SC	IRQ1SC	IRQ0SC	Interrupt controller
H'EE015	IER	8	—	—	IRQ5E	IRQ4E	IRQ3E	IRQ2E	IRQ1E	IRQ0E	
H'EE016	ISR	8	—	—	IRQ5F	IRQ4F	IRQ3F	IRQ2F	IRQ1F	IRQ0F	
H'EE017	—		—	—	—	—	—	—	—	—	
H'EE018	IPRA	8	IPRA7	IPRA6	IPRA5	IPRA4	IPRA3	IPRA2	IPRA1	IPRA0	
H'EE019	IPRB	8	IPRB7	IPRB6	—	—	IPRB3	IPRB2	—	—	
H'EE01A	DASTCR	8	—	—	—	—	—	—	—	DASTE	D/A converter
H'EE01B	DIVCR	8	—	—	—	—	—	—	DIV1	DIV0	System control
H'EE01C	MSTCRH	8	PSTOP	—	—	—	—	—	MSTPH1	MSTPH0	
H'EE01D	MSTCRL	8	—	—	—	MSTPL4	MSTPL3	MSTPL2	—	MSTPL0	
H'EE01E	ADRCR	8	—	—	—	—	—	—	—	ADRCTL	Bus controller
H'EE01F	CSCR	8	CS7E	CS6E	CS5E	CS4E	—	—	—	—	

Address (Low)	Register Name	Data Bus Width	Bit Names								Module Name
			Bit 7	Bit 6	Bit 5	Bit 4	Bit 3	Bit 2	Bit 1	Bit 0	
H'EE020	ABWCR	8	ABW7	ABW6	ABW5	ABW4	ABW3	ABW2	ABW1	ABW0	Bus controller
H'EE021	ASTCR	8	AST7	AST6	AST5	AST4	AST3	AST2	AST1	AST0	
H'EE022	WCRH	8	W71	W70	W61	W60	W51	W50	W41	W40	
H'EE023	WCRL	8	W31	W30	W21	W20	W11	W10	W01	W00	
H'EE024	BCR	8	ICIS1	ICIS0	—*[1]	—*[1]	—*[1]	—*[1]	RDEA	WAITE	
H'EE025	—		—	—	—	—	—	—	—	—	
H'EE026	Reserved area (access prohibited)										
H'EE027											
H'EE028											
H'EE029											
H'EE02A											
H'EE02B											
H'EE02C											
H'EE02D											
H'EE02E											
H'EE02F											
H'EE030	Reserved area (access prohibited)										
H'EE031											
H'EE032											
H'EE033											
H'EE034											
H'EE035											
H'EE036											
H'EE037											
H'EE038											
H'EE039											
H'EE03A											
H'EE03B											
H'EE03C											
H'EE03D											
H'EE03E	P4PCR	8	$P4_7PCR$	$P4_6PCR$	$P4_5PCR$	$P4_4PCR$	$P4_3PCR$	$P4_2PCR$	$P4_1PCR$	$P4_0PCR$	Port 4
H'EE03F	Reserved area (access prohibited)										

Address (Low)	Register Name	Data Bus Width	Bit Names								Module Name
			Bit 7	Bit 6	Bit 5	Bit 4	Bit 3	Bit 2	Bit 1	Bit 0	
H'EE040	Reserved area (access prohibited)										
H'EE041											
H'EE042											
H'EE043											
H'EE044											
H'EE045											
H'EE046											
H'EE047											
H'EE048											
H'EE049											
H'EE04A											
H'EE04B											
H'EE04C											
H'EE04D											
H'EE04E											
H'EE04F											
H'EE050	Reserved area (access prohibited)										
H'EE051											
H'EE052											
H'EE053											
H'EE054											
H'EE055											
H'EE056											
H'EE057											
H'EE058											
H'EE059											
H'EE05A											
H'EE05B											
H'EE05C											
H'EE05D											
H'EE05E											
H'EE05F											

Address (Low)	Register Name	Data Bus Width	Bit Names								Module Name
			Bit 7	Bit 6	Bit 5	Bit 4	Bit 3	Bit 2	Bit 1	Bit 0	
H'EE060	Reserved area (access prohibited)										
H'EE061											
H'EE062											
H'EE063											
H'EE064											
H'EE065											
H'EE066											
H'EE067											
H'EE068											
H'EE069											
H'EE06A											
H'EE06B											
H'EE06C											
H'EE06D											
H'EE06E											
H'EE06F											
H'EE070	Reserved area (access prohibited)										
H'EE071											
H'EE072											
H'EE073											
H'EE074											
H'EE075											
H'EE076											
H'EE077											
H'EE078											
H'EE079											
H'EE07A											
H'EE07B											
H'EE07C											
H'EE07D											
H'EE07E											
H'EE07F											

Address (Low)	Register Name	Data Bus Width	Bit Names								Module Name
			Bit 7	Bit 6	Bit 5	Bit 4	Bit 3	Bit 2	Bit 1	Bit 0	
H'EE080	Reserved area (access prohibited)										
H'EE081											
H'EE082											
H'EE083											
H'EE084											
H'EE085											
H'EE086											
H'EE087											
H'EE088											
H'EE089											
H'EE08A											
H'EE08B											
H'EE08C											
H'EE08D											
H'EE08E											
H'EE08F											
H'EE090	Reserved area (access prohibited)										
H'EE091											
H'EE092											
H'EE093											
H'EE094											
H'EE095											
H'EE096											
H'EE097											
H'EE098											
H'EE099											
H'EE09A											
H'EE09B											
H'EE09C											
H'EE09D											
H'EE09E											
H'EE09F											

Address (Low)	Register Name	Data Bus Width	Bit Names								Module Name
			Bit 7	Bit 6	Bit 5	Bit 4	Bit 3	Bit 2	Bit 1	Bit 0	
H'EE0A0	Reserved area (access prohibited)										
H'EE0A1											
H'EE0A2											
H'EE0A3											
H'EE0A4											
H'EE0A5											
H'EE0A6											
H'EE0A7											
H'EE0A8											
H'EE0A9											
H'EE0AA											
H'EE0AB											
H'EE0AC											
H'EE0AD											
H'EE0AE											
H'EE0AF											
H'EE0B0	Reserved area (access prohibited)										
H'EE0B1											
H'EE0B2											
H'EE0B3											
H'EE0B4											
H'EE0B5											
H'EE0B6											
H'EE0B7											
H'EE0B8											
H'EE0B9											
H'EE0BA											
H'EE0BB											
H'EE0BC											
H'EE0BD											
H'EE0BE											
H'EE0BF											

Address (Low)	Register Name	Data Bus Width	Bit Names								Module Name
			Bit 7	Bit 6	Bit 5	Bit 4	Bit 3	Bit 2	Bit 1	Bit 0	
H'EE0C0	Reserved area (access prohibited)										
H'EE0C1											
H'EE0C2											
H'EE0C3											
H'EE0C4											
H'EE0C5											
H'EE0C6											
H'EE0C7											
H'EE0C8											
H'EE0C9											
H'EE0CA											
H'EE0CB											
H'EE0CC											
H'EE0CD											
H'EE0CE											
H'EE0CF											
H'EE0D0	Reserved area (access prohibited)										
H'EE0D1											
H'EE0D2											
H'EE0D3											
H'EE0D4											
H'EE0D5											
H'EE0D6											
H'EE0D7											
H'EE0D8											
H'EE0D9											
H'EE0DA											
H'EE0DB											
H'EE0DC											
H'EE0DD											
H'EE0DE											
H'EE0DF											

Address (Low)	Register Name	Data Bus Width	Bit Names								Module Name
			Bit 7	Bit 6	Bit 5	Bit 4	Bit 3	Bit 2	Bit 1	Bit 0	
H'EE0E0	Reserved area (access prohibited)										
H'EE0E1											
H'EE0E2											
H'EE0E3											
H'EE0E4											
H'EE0E5											
H'EE0E6											
H'EE0E7											
H'EE0E8											
H'EE0E9											
H'EE0EA											
H'EE0EB											
H'EE0EC											
H'EE0ED											
H'EE0EE											
H'EE0EF											
H'EE0F0	Reserved area (access prohibited)										
H'EE0F1											
H'EE0F2											
H'EE0F3											
H'EE0F4											
H'EE0F5											
H'EE0F6											
H'EE0F7											
H'EE0F8											
H'EE0F9											
H'EE0FA											
H'EE0FB											
H'EE0FC											
H'EE0FD											
H'EE0FE											
H'EE0FF											

Address (Low)	Register Name	Data Bus Width	Bit Names								Module Name
			Bit 7	Bit 6	Bit 5	Bit 4	Bit 3	Bit 2	Bit 1	Bit 0	
H'FFF20	Reserved area (access prohibited)										
H'FFF21											
H'FFF22											
H'FFF23											
H'FFF24											
H'FFF25											
H'FFF26											
H'FFF27											
H'FFF28											
H'FFF29											
H'FFF2A											
H'FFF2B											
H'FFF2C											
H'FFF2D											
H'FFF2E											
H'FFF2F											
H'FFF30	Reserved area (access prohibited)										
H'FFF31											
H'FFF32											
H'FFF33											
H'FFF34											
H'FFF35											
H'FFF36											
H'FFF37											
H'FFF38											
H'FFF39											
H'FFF3A											
H'FFF3B											
H'FFF3C											
H'FFF3D											
H'FFF3E											
H'FFF3F											

Address (Low)	Register Name	Data Bus Width	Bit Names								Module Name
			Bit 7	Bit 6	Bit 5	Bit 4	Bit 3	Bit 2	Bit 1	Bit 0	
H'FFF40	—		—	—	—	—	—	—	—	—	
H'FFF41	—		—	—	—	—	—	—	—	—	
H'FFF42	—		—	—	—	—	—	—	—	—	
H'FFF43	—		—	—	—	—	—	—	—	—	
H'FFF44	—		—	—	—	—	—	—	—	—	
H'FFF45	—		—	—	—	—	—	—	—	—	
H'FFF46	—		—	—	—	—	—	—	—	—	
H'FFF47	—		—	—	—	—	—	—	—	—	
H'FFF48	—		—	—	—	—	—	—	—	—	
H'FFF49	—		—	—	—	—	—	—	—	—	
H'FFF4A	—		—	—	—	—	—	—	—	—	
H'FFF4B	—		—	—	—	—	—	—	—	—	
H'FFF4C	—		—	—	—	—	—	—	—	—	
H'FFF4D	—		—	—	—	—	—	—	—	—	
H'FFF4E	—		—	—	—	—	—	—	—	—	
H'FFF4F	—		—	—	—	—	—	—	—	—	
H'FFF50	—		—	—	—	—	—	—	—	—	
H'FFF51	—		—	—	—	—	—	—	—	—	
H'FFF52	—		—	—	—	—	—	—	—	—	
H'FFF53	—		—	—	—	—	—	—	—	—	
H'FFF54	—		—	—	—	—	—	—	—	—	
H'FFF55	—		—	—	—	—	—	—	—	—	
H'FFF56	—		—	—	—	—	—	—	—	—	
H'FFF57	—		—	—	—	—	—	—	—	—	
H'FFF58	—		—	—	—	—	—	—	—	—	
H'FFF59	—		—	—	—	—	—	—	—	—	
H'FFF5A	—		—	—	—	—	—	—	—	—	
H'FFF5B	—		—	—	—	—	—	—	—	—	
H'FFF5C	—		—	—	—	—	—	—	—	—	
H'FFF5D	—		—	—	—	—	—	—	—	—	
H'FFF5E	—		—	—	—	—	—	—	—	—	
H'FFF5F	—		—	—	—	—	—	—	—	—	

Address (Low)	Register Name	Data Bus Width	Bit Names								Module Name
			Bit 7	Bit 6	Bit 5	Bit 4	Bit 3	Bit 2	Bit 1	Bit 0	
H'FFF60	TSTR	8	—	—	—	—	—	STR2	STR1	STR0	16-bit timer, (all channels)
H'FFF61	TSNC	8	—	—	—	—	—	SYNC2	SYNC1	SYNC0	
H'FFF62	TMDR	8	—	MDF	FDIR	—	—	PWM2	PWM1	PWM0	
H'FFF63	TOLR	8	—	—	TOB2	TOA2	TOB1	TOA1	TOB0	TOA0	
H'FFF64	TISRA	8	—	IMIEA2	IMIEA1	IMIEA0	—	IMFA2	IMFA1	IMFA0	
H'FFF65	TISRB	8	—	IMIEB2	IMIEB1	IMIEB0	—	IMFB2	IMFB1	IMFB0	
H'FFF66	TISRC	8	—	OVIE2	OVIE1	OVIE0	—	OVF2	OVF1	OVF0	
H'FFF67	—		—	—	—	—	—	—	—	—	
H'FFF68	16TCR0	8	—	CCLR1	CCLR0	CKEG1	CKEG0	TPSC2	TPSC1	TPSC0	16-bit timer channel 0
H'FFF69	TIOR0	8	—	IOB2	IOB1	IOB0	—	IOA2	IOA1	IOA0	
H'FFF6A	16TCNT0H	16									
H'FFF6B	16TCNT0L										
H'FFF6C	GRA0H	16									
H'FFF6D	GRA0L										
H'FFF6E	GRB0H	16									
H'FFF6F	GRB0L										
H'FFF70	16TCR1	8	—	CCLR1	CCLR0	CKEG1	CKEG0	TPSC2	TPSC1	TPSC0	16-bit timer channel 1
H'FFF71	TIOR1	8	—	IOB2	IOB1	IOB0	—	IOA2	IOA1	IOA0	
H'FFF72	16TCNT1H	16									
H'FFF73	16TCNT1L										
H'FFF74	GRA1H	16									
H'FFF75	GRA1L										
H'FFF76	GRB1H	16									
H'FFF77	GRB1L										
H'FFF78	16TCR2	8	—	CCLR1	CCLR0	CKEG1	CKEG0	TPSC2	TPSC1	TPSC0	16-bit timer channel 2
H'FFF79	TIOR2	8	—	IOB2	IOB1	IOB0	—	IOA2	IOA1	IOA0	
H'FFF7A	16TCNT2H	16									
H'FFF7B	16TCNT2L										
H'FFF7C	GRA2H	16									
H'FFF7D	GRA2L										
H'FFF7E	GRB2H	16									
H'FFF7F	GRB2L										

Address (Low)	Register Name	Data Bus Width	Bit Names								Module Name
			Bit 7	Bit 6	Bit 5	Bit 4	Bit 3	Bit 2	Bit 1	Bit 0	
H'FFF80	8TCR0	16	CMIEB	CMIEA	OVIE	CCLR1	CCLR0	CKS2	CKS1	CKS0	8-bit timer channels 0 and 1
H'FFF81	8TCR1	16	CMIEB	CMIEA	OVIE	CCLR1	CCLR0	CKS2	CKS1	CKS0	
H'FFF82	8TCSR0	16	CMFB	CMFA	OVF	ADTE	OIS3	OIS2	OS1	OS0	
H'FFF83	8TCSR1	16	CMFB	CMFA	OVF	ICE	OIS3	OIS2	OS1	OS0	
H'FFF84	TCORA0	16									
H'FFF85	TCORA1	16									
H'FFF86	TCORB0	16									
H'FFF87	TCORB1	16									
H'FFF88	8TCNT0	16									
H'FFF89	8TCNT1	16									
H'FFF8A	—		—	—	—	—	—	—	—	—	
H'FFF8B	—		—	—	—	—	—	—	—	—	
H'FFF8C	TCSR*2	8	OVF	WT/$\overline{\text{IT}}$	TME	—	—	CKS2	CKS1	CKS0	WDT
H'FFF8D	TCNT*2	8									
H'FFF8E	—		—	—	—	—	—	—	—	—	
H'FFF8F	RSTCSR*2	8	WRST	RSTOE	—	—	—	—	—	—	
H'FFF90	8TCR2	16	CMIEB	CMIEA	OVIE	CCLR1	CCLR0	CKS2	CKS1	CKS0	8-bit timer channels 2 and 3
H'FFF91	8TCR3	16	CMIEB	CMIEA	OVIE	CCLR1	CCLR0	CKS2	CKS1	CKS0	
H'FFF92	8TCSR2	16	CMFB	CMFA	OVF	—	OIS3	OIS2	OS1	OS0	
H'FFF93	8TCSR3	16	CMFB	CMFA	OVF	ICE	OIS3	OIS2	OS1	OS0	
H'FFF94	TCORA2	16									
H'FFF95	TCORA3	16									
H'FFF96	TCORB2	16									
H'FFF97	TCORB3	16									
H'FFF98	8TCNT2	16									
H'FFF99	8TCNT3	16									
H'FFF9A	—		—	—	—	—	—	—	—	—	
H'FFF9B	—		—	—	—	—	—	—	—	—	
H'FFF9C	DADR0	8									D/A converter
H'FFF9D	DADR1	8									
H'FFF9E	DACR	8	DAOE1	DAOE0	DAE	—	—	—	—	—	
H'FFF9F	—	8	—	—	—	—	—	—	—	—	

Address (Low)	Register Name	Data Bus Width	Bit Names								Module Name
			Bit 7	Bit 6	Bit 5	Bit 4	Bit 3	Bit 2	Bit 1	Bit 0	
H'FFFA0	TPMR	8	—	—	—	—	G3NOV	G2NOV	G1NOV	G0NOV	TPC
H'FFFA1	TPCR	8	G3CMS1	G3CMS0	G2CMS1	G2CMS0	G1CMS1	G1CMS0	G0CMS1	G0CMS0	
H'FFFA2	NDERB	8	NDER15	NDER14	NDER13	NDER12	NDER11	NDER10	NDER9	NDER8	
H'FFFA3	NDERA	8	NDER7	NDER6	NDER5	NDER4	NDER3	NDER2	NDER1	NDER0	
H'FFFA4	NDRB*3	8	NDR15	NDR14	NDR13	NDR12	NDR11	NDR10	NDR9	NDR8	
			NDR15	NDR14	NDR13	NDR12	—	—	—	—	
H'FFFA5	NDRA*3	8	NDR7	NDR6	NDR5	NDR4	NDR3	NDR2	NDR1	NDR0	
			NDR7	NDR6	NDR5	NDR4	—	—	—	—	
H'FFFA6	NDRB*3	8	—	—	—	—	—	—	—	—	
			—	—	—	—	NDR11	NDR10	NDR9	NDR8	
H'FFFA7	NDRA*3	8	—	—	—	—	—	—	—	—	
			—	—	—	—	NDR3	NDR2	NDR1	NDR0	
H'FFFA8	—		—	—	—	—	—	—	—	—	
H'FFFA9	—		—	—	—	—	—	—	—	—	
H'FFFAA	—		—	—	—	—	—	—	—	—	
H'FFFAB	—		—	—	—	—	—	—	—	—	
H'FFFAC	—		—	—	—	—	—	—	—	—	
H'FFFAD	—		—	—	—	—	—	—	—	—	
H'FFFAE	—		—	—	—	—	—	—	—	—	
H'FFFAF	—		—	—	—	—	—	—	—	—	
H'FFFB0	SMR	8	C/$\overline{A}$	CHR	PE	O/$\overline{E}$	STOP	MP	CKS1	CKS0	SCI channel 0
H'FFFB1	BRR	8									
H'FFFB2	SCR	8	TIE	RIE	TE	RE	MPIE	TEIE	CKE1	CKE0	
H'FFFB3	TDR	8									
H'FFFB4	SSR	8	TDRE	RDRF	ORER	FER/ERS	PER	TEND	MPB	MPBT	
H'FFFB5	RDR	8									
H'FFFB6	SCMR	8	—	—	—	—	SDIR	SINV	—	SMIF	
H'FFFB7	Reserved area (access prohibited)										
H'FFFB8	SMR	8	C/$\overline{A}$	CHR	PE	O/$\overline{E}$	STOP	MP	CKS1	CKS0	SCI channel 1
H'FFFB9	BRR	8									
H'FFFBA	SCR	8	TIE	RIE	TE	RE	MPIE	TEIE	CKE1	CKE0	
H'FFFBB	TDR	8									
H'FFFBC	SSR	8	TDRE	RDRF	ORER	FER/ERS	PER	TEND	MPB	MPBT	
H'FFFBD	RDR	8									
H'FFFBE	SCMR	8	—	—	—	—	SDIR	SINV	—	SMIF	
H'FFFBF	Reserved area (access prohibited)										

Address (Low)	Register Name	Data Bus Width	Bit Names								Module Name
			Bit 7	Bit 6	Bit 5	Bit 4	Bit 3	Bit 2	Bit 1	Bit 0	
H'FFFC0	Reserved area (access prohibited)										
H'FFFC1											
H'FFFC2											
H'FFFC3											
H'FFFC4											
H'FFFC5											
H'FFFC6											
H'FFFC7											
H'FFFC8											
H'FFFC9											
H'FFFCA											
H'FFFCB											
H'FFFCC											
H'FFFCD											
H'FFFCE											
H'FFFCF											
H'FFFD0	—		—	—	—	—	—	—	—	—	
H'FFFD1	—		—	—	—	—	—	—	—	—	
H'FFFD2	—		—	—	—	—	—	—	—	—	
H'FFFD3	P4DR	8	$P4_7$	$P4_6$	$P4_5$	$P4_4$	$P4_3$	$P4_2$	$P4_1$	$P4_0$	Port 4
H'FFFD4	—		—	—	—	—	—	—	—	—	
H'FFFD5	P6DR	8	$P6_7$	$P6_6$	$P6_5$	$P6_4$	$P6_3$	$P6_2$	$P6_1$	$P6_0$	Port 6
H'FFFD6	P7DR	8	$P7_7$	$P7_6$	$P7_5$	$P7_4$	$P7_3$	$P7_2$	$P7_1$	$P7_0$	Port 7
H'FFFD7	P8DR	8	—	—	—	$P8_4$	$P8_3$	$P8_2$	$P8_1$	$P8_0$	Port 8
H'FFFD8	P9DR	8	—	—	$P9_5$	$P9_4$	$P9_3$	$P9_2$	$P9_1$	$P9_0$	Port 9
H'FFFD9	PADR	8	PA_7	PA_6	PA_5	PA_4	PA_3	PA_2	PA_1	PA_0	Port A
H'FFFDA	PBDR	8	PB_7	PB_6	PB_5	PB_4	PB_3	PB_2	PB_1	PB_0	Port B
H'FFFDB	—		—	—	—	—	—	—	—	—	
H'FFFDC	—		—	—	—	—	—	—	—	—	
H'FFFDD	—		—	—	—	—	—	—	—	—	
H'FFFDE	—		—	—	—	—	—	—	—	—	
H'FFFDF	—		—	—	—	—	—	—	—	—	

Address (Low)	Register Name	Data Bus Width	Bit Names								Module Name
			Bit 7	Bit 6	Bit 5	Bit 4	Bit 3	Bit 2	Bit 1	Bit 0	
H'FFFE0	ADDRAH	8	AD9	AD8	AD7	AD6	AD5	AD4	AD3	AD2	A/D converter
H'FFFE1	ADDRAL	8	AD1	AD0	—	—	—	—	—	—	
H'FFFE2	ADDRBH	8	AD9	AD8	AD7	AD6	AD5	AD4	AD3	AD2	
H'FFFE3	ADDRBL	8	AD1	AD0	—	—	—	—	—	—	
H'FFFE4	ADDRCH	8	AD9	AD8	AD7	AD6	AD5	AD4	AD3	AD2	
H'FFFE5	ADDRCL	8	AD1	AD0	—	—	—	—	—	—	
H'FFFE6	ADDRDH	8	AD9	AD8	AD7	AD6	AD5	AD4	AD3	AD2	
H'FFFE7	ADDRDL	8	AD1	AD0	—	—	—	—	—	—	
H'FFFE8	ADCSR	8	ADF	ADIE	ADST	SCAN	CKS	CH2	CH1	CH0	
H'FFFE9	ADCR	8	TRGE	—	—	—	—	—	—	—	

Legend:

WDT: Watchdog timer

TPC: Programmable timing pattern controller

SCI: Serial communication interface

Notes:
1. Writing to bits 5 to 2 of BCR is prohibited.
2. For the procedure for writing to TCSR, TCNT, and RSTCSR, see section 11.2.4, Notes on Register Rewriting.
3. The address depends on the output trigger setting.

B.2 Functions

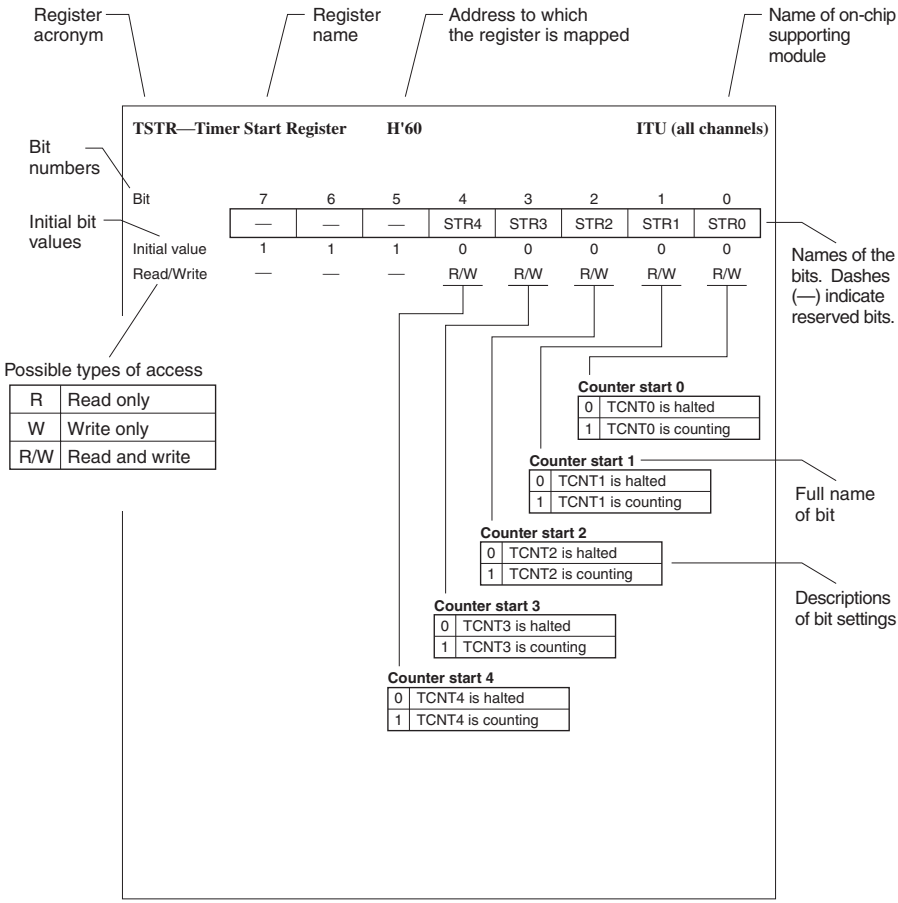

P4DDR—Port 4 Data Direction Register H'EE003 Port 4

Bit	7	6	5	4	3	2	1	0
	$P4_7DDR$	$P4_6DDR$	$P4_5DDR$	$P4_4DDR$	$P4_3DDR$	$P4_2DDR$	$P4_1DDR$	$P4_0DDR$
Initial value	0	0	0	0	0	0	0	0
Read/Write	W	W	W	W	W	W	W	W

Port 4 input/output select

0	Generic input
1	Generic output

P6DDR—Port 6 Data Direction Register H'EE005 Port 6

Bit	7	6	5	4	3	2	1	0
	—	$P6_6DDR$	$P6_5DDR$	$P6_4DDR$	$P6_3DDR$	$P6_2DDR$	$P6_1DDR$	$P6_0DDR$
Initial value	1	0	0	0	0	0	0	0
Read/Write	—	W	W	W	W	W	W	W

Port 6 input/output select

0	Generic input
1	Generic output

P8DDR—Port 8 Data Direction Register H'EE007 Port 8

Bit		7	6	5	4	3	2	1	0
		—	—	—	$P8_4DDR$	$P8_3DDR$	$P8_2DDR$	$P8_1DDR$	$P8_0DDR$
Modes 1 to 4	Initial value	1	1	1	1	0	0	0	0
	Read/Write	—	—	—	W	W	W	W	W
Modes 5 to 7	Initial value	1	1	1	0	0	0	0	0
	Read/Write	—	—	—	W	W	W	W	W

Port 8 input/output select

0	Generic input
1	Generic output

P9DDR—Port 9 Data Direction Register H'EE008 Port 9

Bit	7	6	5	4	3	2	1	0
	—	—	$P9_5DDR$	$P9_4DDR$	$P9_3DDR$	$P9_2DDR$	$P9_1DDR$	$P9_0DDR$
Initial value	1	1	0	0	0	0	0	0
Read/Write	—	—	W	W	W	W	W	W

Port 9 input/output select

0	Generic input
1	Generic output

PADDR—Port A Data Direction Register H'EE009 Port A

Bit	7	6	5	4	3	2	1	0
	PA_7DDR	PA_6DDR	PA_5DDR	PA_4DDR	PA_3DDR	PA_2DDR	PA_1DDR	PA_0DDR
Modes 3 and 4 Initial value	1	0	0	0	0	0	0	0
Modes 3 and 4 Read/Write	—	W	W	W	W	W	W	W
Modes 1 and 2 Initial value	0	0	0	0	0	0	0	0
Modes 1 and 2 Read/Write	W	W	W	W	W	W	W	W

Port A input/output select

0	Generic input
1	Generic output

PBDDR—Port B Data Direction Register H'EE00A Port B

Bit	7	6	5	4	3	2	1	0
	PB_7DDR	PB_6DDR	PB_5DDR	PB_4DDR	PB_3DDR	PB_2DDR	PB_1DDR	PB_0DDR
Initial value	0	0	0	0	0	0	0	0
Read/Write	W	W	W	W	W	W	W	W

Port B input/output select

0	Generic input
1	Generic output

MDCR—Mode Control Register H'EE011 System control

Bit	7	6	5	4	3	2	1	0
	—	—	—	—	—	MDS2	MDS1	MDS0
Initial value	1	1	0	0	0	—*	—*	—*
Read/Write	—	—	—	—	—	R	R	R

Mode select 2 to 0

Bit 2	Bit 1	Bit 0	Operating Mode
MD_2	MD_1	MD_0	
0	0	0	—
		1	Mode 1
	1	0	Mode 2
		1	Mode 3
1	0	0	Mode 4
		1	Mode 5
	1	0	Mode 6
		1	Mode 7

Note: * Determined by the state of the mode pins (MD_2 to MD_0).

SYSCR—System Control Register H'EE012 System control

Bit	7	6	5	4	3	2	1	0
	SSBY	STS2	STS1	STS0	UE	NMIEG	SSOE	RAME
Initial value	0	0	0	0	1	0	0	1
Read/Write	R/W	R/W	R/W	R/W	R/W	R/W	R/W	R/W

RAM enable

0	On-chip RAM is disabled
1	On-chip RAM is enabled

Software standby output port enable

0	In software standby mode, all address bus and bus control signals are high-impedance
1	In software standby mode, address bus retains output state and bus control signals are fixed high

NMI edge select

0	An interrupt is requested at the falling edge of NMI
1	An interrupt is requested at the rising edge of NMI

User bit enable

0	CCR bit 6 (UI) is used as an interrupt mask bit
1	CCR bit 6 (UI) is used as a user bit

Standby timer select 2 to 0

Bit 6	Bit 5	Bit 4	Standby Timer
STS2	STS1	STS0	
0	0	0	Waiting Time = 8,192 states
		1	Waiting Time = 16,384 states
	1	0	Waiting Time = 32,768 states
		1	Waiting Time = 65,536 states
1	0	0	Waiting Time = 131,072 states
		1	Waiting Time = 26,2144 states
	1	0	Waiting Time = 1,024 states
		1	Illegal setting

Software standby

0	SLEEP instruction causes transition to sleep mode
1	SLEEP instruction causes transition to software standby mode

BRCR—Bus Release Control Register H'EE013 Bus controller

Bit		7	6	5	4	3	2	1	0
		A23E	A22E	A21E	A20E	—	—	—	BRLE
Modes 1 and 2	Initial value	1	1	1	1	1	1	1	0
	Read/Write	—	—	—	—	—	—	—	R/W
Modes 3 and 4	Initial value	1	1	1	0	1	1	1	0
	Read/Write	R/W	R/W	R/W	—	—	—	—	R/W

Address 23 to 20 enable

0	Address output
1	Other input/output

Bus release enable

0	The bus cannot be released to an external device
1	The bus can be released to an external device

ISCR—IRQ Sense Control Register H'EE014 Interrupt Controller

Bit	7	6	5	4	3	2	1	0
	—	—	IRQ5SC	IRQ4SC	IRQ3SC	IRQ2SC	IRQ1SC	IRQ0SC
Initial value	0	0	0	0	0	0	0	0
Read/Write	R/W	R/W	R/W	R/W	R/W	R/W	R/W	R/W

IRQ_5 to IRQ_0 sense control

0	Interrupts are requested when $\overline{IRQ_5}$ to $\overline{IRQ_0}$ are low
1	Interrupts are requested by falling-edge input at $\overline{IRQ_5}$ to $\overline{IRQ_0}$

IER—IRQ Enable Register H'EE015 Interrupt Controller

Bit	7	6	5	4	3	2	1	0
	—	—	IRQ5E	IRQ4E	IRQ3E	IRQ2E	IRQ1E	IRQ0E
Initial value	0	0	0	0	0	0	0	0
Read/Write	R/W	R/W	R/W	R/W	R/W	R/W	R/W	R/W

IRQ5 to IRQ0 enable

0	IRQ5 to IRQ0 interrupts are disabled
1	IRQ5 to IRQ0 interrupts are enabled

ISR—IRQ Status Register H'EE016 Interrupt Controller

Bit	7	6	5	4	3	2	1	0
	—	—	IRQ5F	IRQ4F	IRQ3F	IRQ2F	IRQ1F	IRQ0F
Initial value	0	0	0	0	0	0	0	0
Read/Write	—	—	R/(W)*	R/(W)*	R/(W)*	R/(W)*	R/(W)*	R/(W)*

IRQ5 to IRQ0 flags

Bits 5 to 0 IRQ5F to IRQ0F	Setting and Clearing Conditions
0	[Clearing conditions] • Read IRQnF when IRQnF = 1, then write 0 in IRQnF. • IRQnSC = 0, $\overline{\text{IRQn}}$ input is high, and interrupt exception handling is being carried out. • IRQnSC = 1 and IRQn interrupt exception handling is being carried out.
1	[Setting conditions] • IRQnSC = 0 and $\overline{\text{IRQn}}$ input is low. • IRQnSC = 1 and $\overline{\text{IRQn}}$ input changes from high to low.

Note: n = 5 to 0

Note: * Only 0 can be written to clear the flag.

IPRA—Interrupt Priority Register A H'EE018 Interrupt Controller

Bit	7	6	5	4	3	2	1	0
	IPRA7	IPRA6	IPRA5	IPRA4	IPRA3	IPRA2	IPRA1	IPRA0
Initial value	0	0	0	0	0	0	0	0
Read/Write	R/W	R/W	R/W	R/W	R/W	R/W	R/W	R/W

Priority level A7 to A0

0	Priority level 0 (low priority)
1	Priority level 1 (high priority)

• Interrupt sources controlled by each bit

	Bit	Bit 7	Bit 6	Bit 5	Bit 4	Bit 3	Bit 2	Bit 1	Bit 0
IPRA		IPRA7	IPRA6	IPRA5	IPRA4	IPRA3	IPRA2	IPRA1	IPRA0
	Interrupt source	IRQ_0	IRQ_1	IRQ_2, IRQ_3	IRQ_4, IRQ_5	WDT, A/D converter	16-bit timer channel 0	16-bit timer channel 1	16-bit timer channel 2

IPRB—Interrupt Priority Register B H'EE019 Interrupt Controller

Bit	7	6	5	4	3	2	1	0
	IPRB7	IPRB6	—	—	IPRB3	IPRB2	—	—
Initial value	0	0	0	0	0	0	0	0
Read/Write	R/W	R/W	R/W	R/W	R/W	R/W	R/W	R/W

Priority level B7, B6, B3, and B2

0	Priority level 0 (low priority)
1	Priority level 1 (high priority)

• Interrupt sources controlled by each bit

	Bit	Bit 7	Bit 6	Bit 5	Bit 4	Bit 3	Bit 2	Bit 1	Bit 0
IPRB		IPRB7	IPRB6	—	—	IPRB3	IPRB2	—	—
	Interrupt source	8-bit timer channels 0 and 1	8-bit timer channels 2 and 3	—	—	SCI channel 0	SCI channel 1	—	—

DASTCR—D/A Standby Control Register H'EE01A D/A

Bit	7	6	5	4	3	2	1	0
	—	—	—	—	—	—	—	DASTE
Initial value	1	1	1	1	1	1	1	0
Read/Write	—	—	—	—	—	—	—	R/W

D/A standby enable

0	D/A output is disabled in software standby mode	(Initial value)
1	D/A output is enabled in software standby mode	

DIVCR—Division Control Register H'EE01B System control

Bit	7	6	5	4	3	2	1	0
	—	—	—	—	—	—	DIV1	DIV0
Initial value	1	1	1	1	1	1	0	0
Read/Write	—	—	—	—	—	—	R/W	R/W

Division ratio bits 1 and 0

Bit 1	Bit 0	Frequency Division Ratio
DIV1	DIV0	
0	0	1/1 (Initial value)
	1	1/2
1	0	1/4
	1	1/8

MSTCRH—Module Standby Control Register H H'EE01C System control

Bit	7	6	5	4	3	2	1	0
	PSTOP	—	—	—	—	—	MSTPH1	MSTPH0
Initial value	0	1	1	1	1	0	0	0
Read/Write	R/W	—	—	—	—	R/W	R/W	R/W

Module standby H1 to H0
Selection bits for placing modules in standby state.

Reserved bits

ϕ clock stop
Enables or disables ϕ clock output.

MSTCRL—Module Standby Control Register L H'EE01D System control

Bit	7	6	5	4	3	2	1	0
	—	—	—	MSTPL4	MSTPL3	MSTPL2	—	MSTPL0
Initial value	0	0	0	0	0	0	0	0
Read/Write	R/W	R/W	R/W	R/W	R/W	R/W	R/W	R/W

Module standby L4 to L2, L0
Selection bits for placing modules in standby state.

Reserved bits

ADRCR—Address Control Register H'EE01E Bus controller

Bit	7	6	5	4	3	2	1	0
	—	—	—	—	—	—	—	ADRCTL
Initial value	1	1	1	1	1	1	1	1
Read/Write	—	—	—	—	—	—	—	R/W

Reserved bits

Address control

Selects address update mode 1 or address update mode 2.

ADRCTL	Description
0	Address update mode 2 is selected
1	Address update mode 1 is selected (Initial value)

CSCR—Chip Select Control Register H'EE01F Bus controller

Bit	7	6	5	4	3	2	1	0
	CS7E	CS6E	CS5E	CS4E	—	—	—	—
Initial value	0	0	0	0	1	1	1	1
Read/Write	R/W	R/W	R/W	R/W	—	—	—	—

Chip select 7 to 4 enable

Bit n CSnE	Description
0	Output of chip select signal $\overline{\text{CSn}}$ is disabled (Initial value)
1	Output of chip select signal $\overline{\text{CSn}}$ is enabled

Note: n = 7 to 4

ABWCR—Bus Width Control Register H'EE020 Bus controller

Bit		7	6	5	4	3	2	1	0
		ABW7	ABW6	ABW5	ABW4	ABW3	ABW2	ABW1	ABW0
Modes 1 and 3	Initial value	1	1	1	1	1	1	1	1
Modes 2 and 4	Initial value	0	0	0	0	0	0	0	0
	Read/Write	R/W	R/W	R/W	R/W	R/W	R/W	R/W	R/W

Area 7 to 0 bus width control

Bits 7 to 0 ABW7 to ABW0	Bus Width of Access Area
0	Areas 7 to 0 are 16-bit access areas
1	Areas 7 to 0 are 8-bit access areas

ASTCR—Access State Control Register H'EE021 Bus controller

Bit	7	6	5	4	3	2	1	0
	AST7	AST6	AST5	AST4	AST3	AST2	AST1	AST0
Initial value	1	1	1	1	1	1	1	1
Read/Write	R/W	R/W	R/W	R/W	R/W	R/W	R/W	R/W

Area 7 to 0 access state control

Bits 7 to 0 AST7 to AST0	Number of States in Access Area
0	Areas 7 to 0 are two-state access areas
1	Areas 7 to 0 are three-state access areas

WCRH—Wait Control Register H H'EE022 Bus controller

Bit	7	6	5	4	3	2	1	0
	W71	W70	W61	W60	W51	W50	W41	W40
Initial value	1	1	1	1	1	1	1	1
Read/Write	R/W	R/W	R/W	R/W	R/W	R/W	R/W	R/W

Area 4 wait control 1 and 0

0	0	No program wait is inserted
	1	1 program wait state is inserted
1	0	2 program wait states are inserted
	1	3 program wait states are inserted

Area 5 wait control 1 and 0

0	0	No program wait is inserted
	1	1 program wait state is inserted
1	0	2 program wait states are inserted
	1	3 program wait states are inserted

Area 6 wait control 1 and 0

0	0	No program wait is inserted
	1	1 program wait state is inserted
1	0	2 program wait states are inserted
	1	3 program wait states are inserted

Area 7 wait control 1 and 0

0	0	No program wait is inserted
	1	1 program wait state is inserted
1	0	2 program wait states are inserted
	1	3 program wait states are inserted

WCRL—Wait Control Register L H'EE023 Bus controller

Bit	7	6	5	4	3	2	1	0
	W31	W30	W21	W20	W11	W10	W01	W00
Initial value	1	1	1	1	1	1	1	1
Read/Write	R/W	R/W	R/W	R/W	R/W	R/W	R/W	R/W

Area 0 wait control 1 and 0

0	0	No program wait is inserted
	1	1 program wait state is inserted
1	0	2 program wait states are inserted
	1	3 program wait states are inserted

Area 1 wait control 1 and 0

0	0	No program wait is inserted
	1	1 program wait state is inserted
1	0	2 program wait states are inserted
	1	3 program wait states are inserted

Area 2 wait control 1 and 0

0	0	No program wait is inserted
	1	1 program wait state is inserted
1	0	2 program wait states are inserted
	1	3 program wait states are inserted

Area 3 wait control 1 and 0

0	0	No program wait is inserted
	1	1 program wait state is inserted
1	0	2 program wait states are inserted
	1	3 program wait states are inserted

BCR—Bus Control Register H'EE024 Bus controller

Bit	7	6	5	4	3	2	1	0
	ICIS1	ICIS0	—	—	—	—	RDEA	WAITE
Initial value	1	1	0*1	0*1	0*1	1*2	1	0
Read/Write	R/W	R/W	—	—	—	—	R/W	R/W

Wait pin enable

0	WAIT pin wait input is disabled
1	WAIT pin wait input is enabled

Area division unit select

0	Area divisions are as follows: Area 0: 2 Mbytes Area 4: 1.93 Mbytes Area 1: 2 Mbytes Area 5: 4 kbytes Area 2: 8 Mbytes Area 6: 23.75 kbytes Area 3: 2 Mbytes Area 7: 22 bytes
1	Areas 0 to 7 are the same size (2 Mbytes)

Idle cycle insertion 0

0	No idle cycle is inserted in case of consecutive external read and write cycles
1	Idle cycle is inserted in case of consecutive external read and write cycles

Idle cycle insertion 1

0	No idle cycle is inserted in case of consecutive external read cycles for different areas
1	Idle cycle is inserted in case of consecutive external read cycles for different areas

Notes: 1. These bits can be read and written, but must not be set to 1. Normal operation cannot be guaranteed if 1 is written in these bits.
2. 0 must not be written in bit 2.

P4PCR—Port 4 Input Pull-Up MOS Control Register H'EE03E — Port 4

Bit	7	6	5	4	3	2	1	0
	$P4_7PCR$	$P4_6PCR$	$P4_5PCR$	$P4_4PCR$	$P4_3PCR$	$P4_2PCR$	$P4_1PCR$	$P4_0PCR$
Initial value	0	0	0	0	0	0	0	0
Read/Write	R/W	R/W	R/W	R/W	R/W	R/W	R/W	R/W

Port 4 input pull-up MOS control 7 to 0

0	Input pull-up transistor is off
1	Input pull-up transistor is on

Note: Valid when the corresponding P4DDR bit is cleared to 0 (designating generic input).

TSTR—Timer Start Register H'FFF60 16-bit timer (all channels)

Bit	7	6	5	4	3	2	1	0
	—	—	—	—	—	STR2	STR1	STR0
Initial value	1	1	1	1	1	0	0	0
Read/Write	—	—	—	—	—	R/W	R/W	R/W

Reserved bits

Counter start 0

0	16TCNT0 is halted	(Initial value)
1	16TCNT0 is counting	

Counter start 1

0	16TCNT1 is halted	(Initial value)
1	16TCNT1 is counting	

Counter start 2

0	16TCNT2 is halted	(Initial value)
1	16TCNT2 is counting	

TSNC—Timer Synchro Register **H'FFF61 16-bit timer (all channels)**

Bit	7	6	5	4	3	2	1	0
	—	—	—	—	—	SYNC2	SYNC1	SYNC0
Initial value	1	1	1	1	1	0	0	0
Read/Write	—	—	—	—	—	R/W	R/W	R/W

Reserved bits

Timer sync 0

0	Channel 0 timer counter (16TCNT0) operates independently (16TCNT0 presetting/clearing is independent of other channels) (Initial value)
1	Channel 0 operates synchronously Synchronous presetting/synchronous clearing of 16TCNT0 is possible

Timer sync 1

0	Channel 1 timer counter (16TCNT1) operates independently (16TCNT1 presetting/clearing is independent of other channels) (Initial value)
1	Channel 1 operates synchronously Synchronous presetting/synchronous clearing of 16TCNT1 is possible

Timer sync 2

0	Channel 2 timer counter (16TCNT2) operates independently (16TCNT2 presetting/clearing is independent of other channels) (Initial value)
1	Channel 2 operates synchronously Synchronous presetting/synchronous clearing of 16TCNT2 is possible

TMDR—Timer Mode Register H'FFF62 16-bit timer (all channels)

Bit	7	6	5	4	3	2	1	0
	—	MDF	FDIR	—	—	PWM2	PWM1	PWM0
Initial value	1	0	0	1	1	0	0	0
Read/Write	—	R/W	R/W	—	—	R/W	R/W	R/W

PWM mode 0

0	Channel 0 operates normally (Initial value)
1	Channel 0 operates in PWM mode

PWM mode 1

0	Channel 1 operates normally (Initial value)
1	Channel 1 operates in PWM mode

PWM mode 2

0	Channel 2 operates normally (Initial value)
1	Channel 2 operates in PWM mode

Flag direction

0	OVF is set to 1 in TISRC when 16TCNT2 overflows or underflows (Initial value)
1	OVF is set to 1 in TISRC when 16TCNT2 overflows

Phase counting mode

0	Channel 2 operates normally (Initial value)
1	Channel 2 operates in phase counting mode

TOLR—Timer Output Level Setting Register H'FFF63 16-bit timer (all channels)

Bit	7	6	5	4	3	2	1	0
	—	—	TOB2	TOA2	TOB1	TOA1	TOB0	TOA0
Initial value	1	1	0	0	0	0	0	0
Read/Write	—	—	W	W	W	W	W	W

Output level setting A0

0	$TIOCA_0$ is 0	(Initial value)
1	$TIOCA_0$ is 1	

Output level setting B0

0	$TIOCB_0$ is 0	(Initial value)
1	$TIOCB_0$ is 1	

Output level setting A1

0	$TIOCA_1$ is 0	(Initial value)
1	$TIOCA_1$ is 1	

Output level setting B1

0	$TIOCB_1$ is 0	(Initial value)
1	$TIOCB_1$ is 1	

Output level setting A2

0	$TIOCA_2$ is 0	(Initial value)
1	$TIOCA_2$ is 1	

Output level setting B2

0	$TIOCB_2$ is 0	(Initial value)
1	$TIOCB_2$ is 1	

TISRA—Timer Interrupt Status Register A H'FFF64 16-bit timer (all channels)

Bit:	7	6	5	4	3	2	1	0
	—	IMIEA2	IMIEA1	IMIEA0	—	IMFA2	IMFA1	IMFA0
Initial value:	1	0	0	0	1	0	0	0
Read/Write:	—	R/W	R/W	R/W	—	R/(W)*	R/(W)*	R/(W)*

Input capture/compare match flag A0

0	[Clearing conditions] (Initial value) Read IMFA0 when IMFA0 = 1, then write 0 in IMFA0
1	[Setting conditions] • 16TCNT0 = GRA0 when GRA0 functions as an output compare register. • 16TCNT0 value is transferred to GRA0 by an input capture signal when GRA0 functions as an input capture register.

Input capture/compare match flag A1

0	[Clearing conditions] (Initial value) Read IMFA1 when IMFA1 = 1, then write 0 in IMFA1
1	[Setting conditions] • 16TCNT1 = GRA1 when GRA1 functions as an output compare register. • 16TCNT1 value is transferred to GRA1 by an input capture signal when GRA1 functions as an input capture register.

Input capture/compare match flag A2

0	[Clearing conditions] (Initial value) Read IMFA2 when IMFA 2 = 1, then write 0 in IMFA2
1	[Setting conditions] • 16TCNT2 = GRA2 when GRA2 functions as an output compare register. • 16TCNT2 value is transferred to GRA2 by an input capture signal when GRA2 functions as an input capture register.

Input capture/compare match interrupt enable A0

0	IMIA0 interrupt requested by IMFA0 flag is disabled (Initial value)
1	IMIA0 interrupt requested by IMFA0 is enabled

Input capture/compare match interrupt enable A1

0	IMIA1 interrupt requested by IMFA1 flag is disabled (Initial value)
1	IMIA1 interrupt requested by IMFA1 is enabled

Input capture/compare match interrupt enable A2

0	IMIA2 interrupt requested by IMFA2 flag is disabled (Initial value)
1	IMIA2 interrupt requested by IMFA2 is enabled

Note: * Only 0 can be written to clear the flag.

TISRB—Timer Interrupt Status Register B H'FFF65 16-bit timer (all channels)

Bit:	7	6	5	4	3	2	1	0
	—	IMIEB2	IMIEB1	IMIEB0	—	IMFB2	IMFB1	IMFB0
Initial value:	1	0	0	0	1	0	0	0
Read/Write:	—	R/W	R/W	R/W	—	R/(W)*	R/(W)*	R/(W)*

Input capture/compare match flag B0

0	[Clearing condition] (Initial value) Read IMFB0 when IMFB0 = 1, then write 0 in IMFB0.
1	[Setting conditions] 16TCNT0 = GRB0 when GRB0 functions as an output compare register. 16TCNT0 value is transferred to GRB0 by an input capture signal when GRB0 functions as an input capture register.

Input capture/compare match flag B1

0	[Clearing condition] (Initial value) Read IMFB1 when IMFB1 = 1, then write 0 in IMFB1.
1	[Setting conditions] • 16TCNT1 = GRB1 when GRB1 functions as an output compare register. • 16TCNT1 value is transferred to GRB1 by an input capture signal when GRB1 functions as an input capture register.

Input capture/compare match flag B2

0	[Clearing condition] (Initial value) Read IMFB2 when IMFB2 = 1, then write 0 in IMFB2.
1	[Setting conditions] • 16TCNT2 = GRB2 when GRB2 functions as an output compare register. • 16TCNT2 value is transferred to GRB2 by an input capture signal when GRB2 functions as an input capture register.

Input capture/compare match interrupt enable B0

0	IMIB0 interrupt requested by IMFB0 flag is disabled	(Initial value)
1	IMIB0 interrupt requested by IMFB0 is enabled	

Input capture/compare match interrupt enable B1

0	IMIB1 interrupt requested by IMFB1 flag is disabled	(Initial value)
1	IMIB1 interrupt requested by IMFB1 is enabled	

Input capture/compare match interrupt enable B2

0	IMIB2 interrupt requested by IMFB2 flag is disabled	(Initial value)
1	IMIB2 interrupt requested by IMFB2 is enabled	

Note: * Only 0 can be written to clear the flag.

TISRC—Timer Interrupt Status Register C H'FFF66 16-bit timer (all channels)

Bit:	7	6	5	4	3	2	1	0
	—	OVIE2	OVIE1	OVIE0	—	OVF2	OVF1	OVF0
Initial value:	1	0	0	0	1	0	0	0
Read/Write:	—	R/W	R/W	R/W	—	R/(W)*	R/(W)*	R/(W)*

Overflow flag 0

0	[Clearing condition] (Initial value) Read OVF0 when OVF0 = 1, then write 0 in OVF0.
1	[Setting condition] 16TCNT0 overflowed from H'FFFF to H'0000.

Overflow flag 1

0	[Clearing condition] (Initial value) Read OVF1 when OVF1 = 1, then write 0 in OVF1.
1	[Setting condition] 16TCNT1 overflowed from H'FFFF to H'0000.

Overflow flag 2

0	[Clearing condition] (Initial value) Read OVF2 when OVF2 = 1, then write 0 in OVF2.
1	[Setting condition] 16TCNT2 overflowed from H'FFFF to H'0000, or underflowed from H'0000 to H'FFFF.

Overflow interrupt enable 0

0	OVI0 interrupt requested by OVF0 flag is disabled	(Initial value)
1	OVI0 interrupt requested by OVF0 flag is enabled	

Overflow interrupt enable 1

0	OVI1 interrupt requested by OVF1 flag is disabled	(Initial value)
1	OVI1 interrupt requested by OVF1 flag is enabled	

Overflow interrupt enable 2

0	OVI2 interrupt requested by OVF2 flag is disabled	(Initial value)
1	OVI2 interrupt requested by OVF2 flag is enabled	

Note: * Only 0 can be written to clear the flag.

16TCR0—Timer Control Register 0 H'FFF68 16-bit timer channel 0

Bit	7	6	5	4	3	2	1	0
	—	CCLR1	CCLR0	CKEG1	CKEG0	TPSC2	TPSC1	TPSC0
Initial value	1	0	0	0	0	0	0	0
Read/Write	—	R/W	R/W	R/W	R/W	R/W	R/W	R/W

Timer prescaler 2 to 0

Bit 2	Bit 1	Bit 0	Description
TPSC2	TPSC1	TPSC0	
0	0	0	Internal clock : ϕ (Initial value)
		1	Internal clock : ϕ / 2
	1	0	Internal clock : ϕ / 4
		1	Internal clock : ϕ / 8
1	0	0	External clock A : TCLKA input
		1	External clock B : TCLKB input
	1	0	External clock C : TCLKC input
		1	External clock D : TCLKD input

Clock edge 1 and 0

Bit 4	Bit 3	Description
CKEG	CKEG0	
0	0	Rising edges counted (Initial value)
0	1	Falling edges counted
1	—	Both edges counted

Counter clear 1 and 0

Bit 6	Bit 5	Description
CCLR1	CCLR0	
0	0	16TCNT is not cleared (Initial value)
	1	16TCNT is cleared by GRA compare match or input capture
1	0	16TCNT is cleared by GRB compare match or input capture
	1	Synchronous clear : 16TCNT is cleared in synchronization with other synchronized timers

TIOR0—Timer I/O Control Register 0 H'FFF69 16-bit timer channel 0

Bit:	7	6	5	4	3	2	1	0
	—	IOB2	IOB1	IOB0	—	IOA2	IOA1	IOA0
Initial value:	1	0	0	0	1	0	0	0
Read/Write:	—	R/W	R/W	R/W	—	R/W	R/W	R/W

I / O control A2 to A0

Bit 2	Bit 1	Bit 0	Description	
IOA2	IOA1	IOA0		
0	0	0	GRA is an output compare register	No output at compare match (Initial value)
		1		0 output at GRA compare match
	1	0		1 output at GRA compare match
		1		Output toggles at GRA compare match (1 output on channel 2)
1	0	0	GRA is an input capture register	GRA captures rising edges of input
		1		GRA captures falling edges of input
	1	0		GRB captures both edges of input
		1		

I / O control B2 to B0

Bit 6	Bit 5	Bit 4	Description	
IOB2	IOB1	IOB0		
0	0	0	GRB is an output compare register	No output at compare match (Initial value)
		1		0 output at GRB compare match
	1	0		1 output at GRB compare match
		1		Output toggles at GRB compare match (1 output on channel 2)
1	0	0	GRB is an input capture register	GRB captures rising edges of input
		1		GRB captures falling edges of input
	1	0		GRB captures both edges of input
		1		

16TCNT0 H/L—Timer Counter 0 H/L H'FFF6A, H'FFF6B 16-bit timer channel 0

Bit	15	14	13	12	11	10	9	8	7	6	5	4	3	2	1	0
Initial value	0	0	0	0	0	0	0	0	0	0	0	0	0	0	0	0
Read/Write	R/W	R/W	R/W	R/W	R/W	R/W	R/W	R/W	R/W	R/W	R/W	R/W	R/W	R/W	R/W	R/W

Up-counter

GRA0 H/L—General Register A0 H/L H'FFF6C, H'FFF6D 16-bit timer channel 0

Bit	15	14	13	12	11	10	9	8	7	6	5	4	3	2	1	0
Initial value	1	1	1	1	1	1	1	1	1	1	1	1	1	1	1	1
Read/Write	R/W	R/W	R/W	R/W	R/W	R/W	R/W	R/W	R/W	R/W	R/W	R/W	R/W	R/W	R/W	R/W

Output compare or input capture register

GRB0 H/L—General Register B0 H/L H'FFF6E, H'FFF6F 16-bit timer channel 0

Bit	15	14	13	12	11	10	9	8	7	6	5	4	3	2	1	0
Initial value	1	1	1	1	1	1	1	1	1	1	1	1	1	1	1	1
Read/Write	R/W	R/W	R/W	R/W	R/W	R/W	R/W	R/W	R/W	R/W	R/W	R/W	R/W	R/W	R/W	R/W

Output compare or input capture register

16TCR1 Timer Control Register 1 H'FFF70 16-bit timer channel 1

Bit	7	6	5	4	3	2	1	0
	—	CCLR1	CCLR0	CKEG1	CKEG0	TPSC2	TPSC1	TPSC0
Initial value	1	0	0	0	0	0	0	0
Read/Write	—	R/W	R/W	R/W	R/W	R/W	R/W	R/W

Note: Bit functions are the same as for 16-bit timer channel 0.

TIOR1—Timer I/O Control Register 1 H'FFF71 16-bit timer channel 1

Bit	7	6	5	4	3	2	1	0
	—	IOB2	IOB1	IOB0	—	IOA2	IOA1	IOA0
Initial value	1	0	0	0	1	0	0	0
Read/Write	—	R/W	R/W	R/W	—	R/W	R/W	R/W

Note: Bit functions are the same as for 16-bit timer channel 0.

16TCNT1 H/L—Timer Counter 1 H/L H'FFF72, H'FFF73 16-bit timer channel 1

Bit	15	14	13	12	11	10	9	8	7	6	5	4	3	2	1	0
Initial value	0	0	0	0	0	0	0	0	0	0	0	0	0	0	0	0
Read/Write	R/W	R/W	R/W	R/W	R/W	R/W	R/W	R/W	R/W	R/W	R/W	R/W	R/W	R/W	R/W	R/W

Note: Bit functions are the same as for 16-bit timer channel 0.

GRA1 H/L—General Register A1 H/L H'FFF74, H'FFF75 16-bit timer channel 1

Bit	15	14	13	12	11	10	9	8	7	6	5	4	3	2	1	0
Initial value	1	1	1	1	1	1	1	1	1	1	1	1	1	1	1	1
Read/Write	R/W	R/W	R/W	R/W	R/W	R/W	R/W	R/W	R/W	R/W	R/W	R/W	R/W	R/W	R/W	R/W

Note: Bit functions are the same as for 16-bit timer channel 0.

GRB1 H/L—General Register B1 H/L H'FFF76, H'FFF77 16-bit timer channel 1

Bit	15	14	13	12	11	10	9	8	7	6	5	4	3	2	1	0
Initial value	1	1	1	1	1	1	1	1	1	1	1	1	1	1	1	1
Read/Write	R/W	R/W	R/W	R/W	R/W	R/W	R/W	R/W	R/W	R/W	R/W	R/W	R/W	R/W	R/W	R/W

Note: Bit functions are the same as for 16-bit timer channel 0.

16TCR2—Timer Control Register 2 H'FFF78 16-bit timer channel 2

Bit	7	6	5	4	3	2	1	0
	—	CCLR1	CCLR0	CKEG1	CKEG0	TPSC2	TPSC1	TPSC0
Initial value	1	0	0	0	0	0	0	0
Read/Write	—	R/W	R/W	R/W	R/W	R/W	R/W	R/W

Notes: 1. Bit functions are the same as for 16-bit timer channel 0.
2. When phase counting mode is selected in channel 2, the settings of bits CKEG1 and CKEG0 and TPSC2 to TPSC0 in 16TCR2 are ignored.

TIOR2—Timer I/O Control Register 2 H'FFF79 16-bit timer channel 2

Bit	7	6	5	4	3	2	1	0
	—	IOB2	IOB1	IOB0	—	IOA2	IOA1	IOA0
Initial value	1	0	0	0	1	0	0	0
Read/Write	—	R/W	R/W	R/W	—	R/W	R/W	R/W

Note: Bit functions are the same as for 16-bit timer channel 0.

16TCNT2 H/L—Timer Counter 2 H/L H'FFF7A, H'FFF7B 16-bit timer channel 2

Bit	15	14	13	12	11	10	9	8	7	6	5	4	3	2	1	0
Initial value	0	0	0	0	0	0	0	0	0	0	0	0	0	0	0	0
Read/Write	R/W	R/W	R/W	R/W	R/W	R/W	R/W	R/W	R/W	R/W	R/W	R/W	R/W	R/W	R/W	R/W

Phase counting mode : up/down-counter
Other mode : up-counter

GRA2 H/L—General Register A2 H/L H'FFF7C, H'FFF7D 16-bit timer channel 2

Bit	15	14	13	12	11	10	9	8	7	6	5	4	3	2	1	0
Initial value	1	1	1	1	1	1	1	1	1	1	1	1	1	1	1	1
Read/Write	R/W	R/W	R/W	R/W	R/W	R/W	R/W	R/W	R/W	R/W	R/W	R/W	R/W	R/W	R/W	R/W

Note: Bit functions are the same as for 16-bit timer channel 0.

GRB2 H/L—General Register B2 H/L H'FFF7E, H'FFF7F 16-bit timer channel 2

Bit	15	14	13	12	11	10	9	8	7	6	5	4	3	2	1	0
Initial value	1	1	1	1	1	1	1	1	1	1	1	1	1	1	1	1
Read/Write	R/W	R/W	R/W	R/W	R/W	R/W	R/W	R/W	R/W	R/W	R/W	R/W	R/W	R/W	R/W	R/W

Note: Bit functions are the same as for 16-bit timer channel 0.

8TCR0—Timer Control Register 0 H'FFF80 8-bit timer channel 0
8TCR1—Timer Control Register 1 H'FFF81 8-bit timer channel 1

Bit	7	6	5	4	3	2	1	0
	CMIEB	CMIEA	OVIE	CCLR1	CCLR0	CKS2	CKS1	CKS0
Initial value	0	0	0	0	0	0	0	0
Read/Write	R/W	R/W	R/W	R/W	R/W	R/W	R/W	R/W

Clock select 2 to 0

0	0	0	Clock input is disabled
		1	Internal clock: counted on rising edge of ϕ/8
	1	0	Internal clock: counted on rising edge of ϕ/64
		1	Internal clock: counted on rising edge of ϕ/8192
1	0	0	Channel 0: Count on 8TCNT1 overflow signal* Channel 1: Count on 8TCNT0 compare match A*
		1	External clock: counted on falling edge
	1	0	External clock: counted on rising edge
		1	External clock: counted on both rising and falling edges

Note: * If the clock input of channel 0 is the 8TCNT1 overflow signal and that of channel 1 is the 8TCNT0 compare match signal, no incrementing clock is generated. Do not use this setting.

Counter clear 1 and 0

0	0	Clearing is disabled
	1	Cleared by compare match A
1	0	Cleared by compare match B/input capture B
	1	Cleared by input capture B

Timer overflow interrupt enable

0	OVI interrupt requested by OVF is disabled
1	OVI interrupt requested by OVF is enabled

Compare match interrupt enable A

0	CMIA interrupt requested by CMFA is disabled
1	CMIA interrupt requested by CMFA is enabled

Compare match interrupt enable B

0	CMIB interrupt requested by CMFB is disabled
1	CMIB interrupt requested by CMFB is enabled

8TCSR0—Timer Control/Status Register 0 H'FFF82 8-bit timer channel 0

Bit	7	6	5	4	3	2	1	0
	CMFB	CMFA	OVF	ADTE	OIS3	OIS2	OS1	OS0
Initial value	0	0	0	0	0	0	0	0
Read/Write	R/(W)*1	R/(W)*1	R/(W)*1	R/W	R/W	R/W	R/W	R/W

Output select A1 and A0

Bit 1 OS1	Bit 0 OS0	Description
0	0	No change at compare match A
	1	0 output at compare match A
1	0	1 output at compare match A
	1	Output toggles at compare match A

Output/input capture edge select B3 and B2

ICE in 8TCSR1	Bit 3 OIS3	Bit 2 OIS2	Description
0	0	0	No change at compare match B
		1	0 output at compare match B
	1	0	1 output at compare match B
		1	Output toggles at compare match B
1	0	0	TCORB input capture on rising edge
		1	TCORB input capture on falling edge
	1	0	TCORB input capture on both rising and falling edges
		1	

A/D trigger enable

TRGE*2	Bit 4 ADTE	Description
0	0	A/D converter start requests by compare match A or an external trigger are disabled
	1	A/D converter start requests by compare match A or an external trigger are disabled
1	0	A/D converter start requests by an external trigger are enabled, and A/D converter start requests by compare match A are disabled
	1	A/D converter start requests by compare match A are enabled, and A/D converter start requests by an external trigger are disabled

Note: 2. TRGE is bit 7 of the A/D control register (ADCR).

Timer overflow flag

0	[Clearing condition] Read OVF when OVF = 1, then write 0 in OVF.
1	[Setting condition] 8TCNT overflows from H'FF to H'00.

Compare match flag A

0	[Clearing condition] Read CMFA when CMFA = 1, then write 0 in CMFA.
1	[Setting condition] 8TCNT = TCORA

Compare match/input capture flag B

0	[Clearing condition] Read CMFB when CMFB = 1, then write 0 in CMFB.
1	[Setting conditions] • 8TCNT = TCORB • The 8TCNT value is transferred to TCORB by an input capture signal when TCORB functions as an input capture register.

Note: 1. Only 0 can be written to bits 7 to 5 to clear these flags.

8TCSR1—Timer Control/Status Register 1 H'FFF83 8-bit timer channel 1

Bit	7	6	5	4	3	2	1	0
	CMFB	CMFA	OVF	ICE	OIS3	OIS2	OS1	OS0
Initial value	0	0	0	0	0	0	0	0
Read/Write	R/(W)*	R/(W)*	R/(W)*	R/W	R/W	R/W	R/W	R/W

Output select A1 and A0

Bit 1	Bit 0	Description
OS1	OS0	
0	0	No change at compare match A
	1	0 output at compare match A
1	0	1 output at compare match A
	1	Output toggles at compare match A

Output/input capture edge select B3 and B2

ICE in 8TCSR1	Bit 3	Bit 2	Description
	OIS3	OIS2	
0	0	0	No change at compare match B
		1	0 output at compare match B
	1	0	1 output at compare match B
		1	Output toggles at compare match B
1	0	0	TCORB input capture on rising edge
		1	TCORB input capture on falling edge
	1	0	TCORB input capture on both rising and falling edges
		1	

Input capture enable

0	TCORB is a compare match register
1	TCORB is an input capture register

Timer overflow flag

0	[Clearing condition] Read OVF when OVF = 1, then write 0 in OVF.
1	[Setting condition] 8TCNT overflows from H'FF to H'00.

Compare match flag A

0	[Clearing condition] Read CMFA when CMFA = 1, then write 0 in CMFA.
1	[Setting condition] 8TCNT = TCORA

Compare match/input capture flag B

0	[Clearing condition] Read CMFB when CMFB = 1, then write 0 in CMFB.
1	[Setting conditions] • 8TCNT = TCORB • The 8TCNT value is transferred to TCORB by an input capture signal when TCORB functions as an input capture register.

Note: * Only 0 can be written to bits 7 to 5 to clear these flags.

TCORA0—Time Constant Register A0 **H'FFF84** **8-bit timer channel 0**
TCORA1—Time Constant Register A1 **H'FFF85** **8-bit timer channel 1**

	TCORA0								TCORA1							
Bit	15	14	13	12	11	10	9	8	7	6	5	4	3	2	1	0
Initial value	1	1	1	1	1	1	1	1	1	1	1	1	1	1	1	1
Read/Write	R/W	R/W	R/W	R/W	R/W	R/W	R/W	R/W	R/W	R/W	R/W	R/W	R/W	R/W	R/W	R/W

TCORB0—Time Constant Register B0 **H'FFF86** **8-bit timer channel 0**
TCORB1—Time Constant Register B1 **H'FFF87** **8-bit timer channel 1**

	TCORB0								TCORB1							
Bit	15	14	13	12	11	10	9	8	7	6	5	4	3	2	1	0
Initial value	1	1	1	1	1	1	1	1	1	1	1	1	1	1	1	1
Read/Write	R/W	R/W	R/W	R/W	R/W	R/W	R/W	R/W	R/W	R/W	R/W	R/W	R/W	R/W	R/W	R/W

8TCNT0—Timer Counter 0 **H'FFF88** **8-bit timer channel 0**
8TCNT1—Timer Counter 1 **H'FFF89** **8-bit timer channel 1**

	8TCNT0								8TCNT1							
Bit	15	14	13	12	11	10	9	8	7	6	5	4	3	2	1	0
Initial value	0	0	0	0	0	0	0	0	0	0	0	0	0	0	0	0
Read/Write	R/W	R/W	R/W	R/W	R/W	R/W	R/W	R/W	R/W	R/W	R/W	R/W	R/W	R/W	R/W	R/W

TCSR—Timer Control/Status Register H'FFF8C WDT

Bit	7	6	5	4	3	2	1	0
	OVF	WT/$\overline{\text{IT}}$	TME	—	—	CKS2	CKS1	CKS0
Initial value	0	0	0	1	1	0	0	0
Read/Write	R/(W)*	R/W	R/W	—	—	R/W	R/W	R/W

Clock select 2 to 0

CKS2	CKS1	CKS0	Description
0	0	0	ϕ/2
		1	ϕ/32
	1	0	ϕ/64
		1	ϕ/128
1	0	0	ϕ/256
		1	ϕ/512
	1	0	ϕ/2048
		1	ϕ/4096

Timer enable

0	Timer disabled: TCNT is initialized to H'00 and halted
1	Timer enabled: TCNT starts counting up

Timer mode select

0	Interval timer: requests interval timer interrupts
1	Watchdog timer: generates a reset signal

Overflow flag

0	[Clearing condition] Read OVF when OVF = 1, then write 0 in OVF
1	[Setting condition] TCNT changes from H'FF to H'00

Note: * Only 0 can be written to clear the flag.

TCNT—Timer Counter H'FFF8D (read), H'FFF8C (write) WDT

Bit	7	6	5	4	3	2	1	0
Initial value	0	0	0	0	0	0	0	0
Read/Write	R/W	R/W	R/W	R/W	R/W	R/W	R/W	R/W

Count value

RSTCSR—Reset Control/Status Register H'FFF8F (read), H'FFF8E (write) WDT

Bit	7	6	5	4	3	2	1	0
	WRST	RSTOE	—	—	—	—	—	—
Initial value	0	0	1	1	1	1	1	1
Read/Write	R/(W)*	R/W	—	—	—	—	—	—

Reset output enable

0	External output of reset signal is disabled
1	External output of reset signal is enabled

Watchdog timer reset

0	[Clearing conditions] • Reset signal at $\overline{\text{RES}}$ pin • Read WRST when WRST = 1, then write 0 in WRST
1	[Setting condition] TCNT overflow generates a reset signal during watchdog timer operation

Note: * Only 0 can be written in bit 7 to clear the flag.

8TCR2—Timer Control Register 2 H'FFF90 8-bit timer channel 2
8TCR3—Timer Control Register 3 H'FFF91 8-bit timer channel 3

Bit	7	6	5	4	3	2	1	0
	CMIEB	CMIEA	OVIE	CCLR1	CCLR0	CKS2	CKS1	CKS0
Initial value	0	0	0	0	0	0	0	0
Read/Write	R/W	R/W	R/W	R/W	R/W	R/W	R/W	R/W

Clock select 2 to 0

CSK2	CSK1	CSK0	Description
0	0	0	Clock input is disabled
		1	Internal clock: counted on rising edge of $\phi/8$
	1	0	Internal clock: counted on rising edge of $\phi/64$
		1	Internal clock: counted on rising edge of $\phi/8192$
1	0	0	Channel 2: Count on 8TCNT3 overflow signal* Channel 3: Count on 8TCNT2 compare match A*
		1	External clock: counted on falling edge
	1	0	External clock: counted on rising edge
		1	External clock: counted on both rising and falling edges

Note: * If the clock input of channel 2 is the 8TCNT3 overflow signal and that of channel 3 is the 8TCNT2 compare match signal, no incrementing clock is generated. Do not use this setting.

Counter clear 1 and 0

0	0	Clearing is disabled
	1	Cleared by compare match A
1	0	Cleared by compare match B/input capture B
	1	Cleared by input capture B

Timer overflow interrupt enable

0	OVI interrupt requested by OVF is disabled
1	OVI interrupt requested by OVF is enabled

Compare match interrupt enable A

0	CMIA interrupt requested by CMFA is disabled
1	CMIA interrupt requested by CMFA is enabled

Compare match interrupt enable B

0	CMIB interrupt requested by CMFB is disabled
1	CMIB interrupt requested by CMFB is enabled

8TCSR2—Timer Control/Status Register 2 H'FFF92 8-bit timer channel 2
8TCSR3—Timer Control/Status Register 3 H'FFF93 8-bit timer channel 3

	Bit	7	6	5	4	3	2	1	0
8TCSR2		CMFB	CMFA	OVF	—	OIS3	OIS2	OS1	OS0
	Initial value	0	0	0	1	0	0	0	0
	Read/Write	R/(W)*	R/(W)*	R/(W)*	—	R/W	R/W	R/W	R/W
8TCSR3	Bit	7	6	5	4	3	2	1	0
		CMFB	CMFA	OVF	ICE	OIS3	OIS2	OS1	OS0
	Initial value	0	0	0	0	0	0	0	0
	Read/Write	R/(W)*	R/(W)*	R/(W)*	R/W	R/W	R/W	R/W	R/W

Output select A1 and A0

Bit 1	Bit 0	Description
OS1	OS0	
0	0	No change at compare match A
	1	0 output at compare match A
1	0	1 output at compare match A
	1	Output toggles at compare match A

Output/input capture edge select B3 and B2

ICE in 8TCSR3	Bit 3	Bit 2	Description
	OIS3	OIS2	
0	0	0	No change at compare match B
		1	0 output at compare match B
	1	0	1 output at compare match B
		1	Output toggles at compare match B
1	0	0	TCORB input capture on rising edge
		1	TCORB input capture on falling edge
	1	0	TCORB input capture on both rising and falling edges

Input capture enable

0	TCORB is a compare match register
1	TCORB is an input capture register

Timer overflow flag

0	[Clearing condition] Read OVF when OVF = 1, then write 0 in OVF.
1	[Setting condition] 8TCNT overflows from H'FF to H'00.

Compare match flag A

0	[Clearing condition] Read CMFA when CMFA = 1, then write 0 in CMFA.
1	[Setting condition] 8TCNT = TCORA

Compare match/input capture flag B

0	[Clearing condition] Read CMFB when CMFB = 1, then write 0 in CMFB.
1	[Setting conditions] • 8TCNT = TCORB • The 8TCNT value is transferred to TCORB by an input capture signal when TCORB functions as an input capture register.

Note: * Only 0 can be written to bits 7 to 5 to clear these flags.

TCORA2—Time Constant Register A2 **H'FFF94** **8-bit timer channel 2**
TCORA3—Time Constant Register A3 **H'FFF95** **8-bit timer channel 3**

	TCORA2								TCORA3							
Bit	15	14	13	12	11	10	9	8	7	6	5	4	3	2	1	0
Initial value	1	1	1	1	1	1	1	1	1	1	1	1	1	1	1	1
Read/Write	R/W	R/W	R/W	R/W	R/W	R/W	R/W	R/W	R/W	R/W	R/W	R/W	R/W	R/W	R/W	R/W

TCORB2—Time Constant Register B2 **H'FFF96** **8-bit timer channel 2**
TCORB3—Time Constant Register B3 **H'FFF97** **8-bit timer channel 3**

	TCORB2								TCORB3							
Bit	15	14	13	12	11	10	9	8	7	6	5	4	3	2	1	0
Initial value	1	1	1	1	1	1	1	1	1	1	1	1	1	1	1	1
Read/Write	R/W	R/W	R/W	R/W	R/W	R/W	R/W	R/W	R/W	R/W	R/W	R/W	R/W	R/W	R/W	R/W

8TCNT2—Timer Counter 2 **H'FFF98** **8-bit timer channel 2**
8TCNT3—Timer Counter 3 **H'FFF99** **8-bit timer channel 3**

	8TCNT2								8TCNT3							
Bit	15	14	13	12	11	10	9	8	7	6	5	4	3	2	1	0
Initial value	0	0	0	0	0	0	0	0	0	0	0	0	0	0	0	0
Read/Write	R/W	R/W	R/W	R/W	R/W	R/W	R/W	R/W	R/W	R/W	R/W	R/W	R/W	R/W	R/W	R/W

DADR0—D/A Data Register 0 **H'FFF9C** **D/A**

Bit	7	6	5	4	3	2	1	0
Initial value	0	0	0	0	0	0	0	0
Read/Write	R/W	R/W	R/W	R/W	R/W	R/W	R/W	R/W

D/A conversion data

DADR1—D/A Data Register 1 H'FFF9D D/A

Bit	7	6	5	4	3	2	1	0
Initial value	0	0	0	0	0	0	0	0
Read/Write	R/W	R/W	R/W	R/W	R/W	R/W	R/W	R/W
	D/A conversion data							

DACR—D/A Control Register H'FFF9E D/A

Bit	7	6	5	4	3	2	1	0
	DAOE1	DAOE0	DAE	—	—	—	—	—
Initial value	0	0	0	1	1	1	1	1
Read/Write	R/W	R/W	R/W	—	—	—	—	—

D/A enable

Bit 7	Bit 6	Bit 5	Description
DAOE1	DAOE0	DAE	
0	0	—	D/A conversion is disabled in channels 0 and 1
0	1	0	D/A conversion is enabled in channel 0 D/A conversion is disabled in channel 1
0	1	1	D/A conversion is enabled in channels 0 and 1
1	0	0	D/A conversion is disabled in channel 0 D/A conversion is enabled in channel 1
1	0	1	D/A conversion is enabled in channels 0 and 1
1	1	—	D/A conversion is enabled in channels 0 and 1

D/A output enable 0

0	DA_0 analog output is disabled
1	Channel-0 D/A conversion and DA_0 analog output are enabled

D/A output enable 1

0	DA_1 analog output is disabled
1	Channel-1 D/A conversion and DA_1 analog output are enabled

TPMR—TPC Output Mode Register H'FFFA0 TPC

Bit	7	6	5	4	3	2	1	0
	—	—	—	—	G3NOV	G2NOV	G1NOV	G0NOV
Initial value	1	1	1	1	0	0	0	0
Read/Write	—	—	—	—	R/W	R/W	R/W	R/W

Group 0 non-overlap

0	Normal TPC output in group 0. Output values change at compare match A in the selected 16-bit timer channel
1	Non-overlapping TPC output in group 0, controlled by compare match A and B in the selected 16-bit timer channel

Group 1 non-overlap

0	Normal TPC output in group 1. Output values change at compare match A in the selected 16-bit timer channel
1	Non-overlapping TPC output in group 1, controlled by compare match A and B in the selected 16-bit timer channel

Group 2 non-overlap

0	Normal TPC output in group 2. Output values change at compare match A in the selected 16-bit timer channel
1	Non-overlapping TPC output in group 2, controlled by compare match A and B in the selected 16-bit timer channel

Group 3 non-overlap

0	Normal TPC output in group 3. Output values change at compare match A in the selected 16-bit timer channel
1	Non-overlapping TPC output in group 3, controlled by compare match A and B in the selected 16-bit timer channel

TPCR—TPC Output Control Register H'FFFA1 TPC

Bit	7	6	5	4	3	2	1	0
	G3CMS1	G3CMS0	G2CMS1	G2CMS0	G1CMS1	G1CMS0	G0CMS1	G0CMS0
Initial value	1	1	1	1	1	1	1	1
Read/Write	R/W	R/W	R/W	R/W	R/W	R/W	R/W	R/W

Group 0 compare match select 1 and 0

Bit 1	Bit 0	16-Bit Timer Channel Selected as Output Trigger
G0CMS1	G0CMS0	
0	0	TPC output group 0 (TP_3 to TP_0) is triggered by compare match in 16-bit timer channel 0
	1	TPC output group 0 (TP_3 to TP_0) is triggered by compare match in 16-bit timer channel 1
1	0	TPC output group 0 (TP_3 to TP_0) is triggered by compare match in 16-bit timer channel 2
	1	

Group 1 compare match select 1 and 0

Bit 3	Bit 2	16-Bit Timer Channel Selected as Output Trigger
G1CMS1	G1CMS0	
0	0	TPC output group 1 (TP_7 to TP_4) is triggered by compare match in 16-bit timer channel 0
	1	TPC output group 1 (TP_7 to TP_4) is triggered by compare match in 16-bit timer channel 1
1	0	TPC output group 1 (TP_7 to TP_4) is triggered by compare match in 16-bit timer channel 2
	1	

Group 2 compare match select 1 and 0

Bit 5	Bit 4	16-Bit Timer Channel Selected as Output Trigger
G2CMS1	G2CMS0	
0	0	TPC output group 2 (TP_{11} to TP_8) is triggered by compare match in 16-bit timer channel 0
	1	TPC output group 2 (TP_{11} to TP_8) is triggered by compare match in 16-bit timer channel 1
1	0	TPC output group 2 (TP_{11} to TP_8) is triggered by compare match in 16-bit timer channel 2
	1	

Group 3 compare match select 1 and 0

Bit 7	Bit 6	16-Bit Timer Channel Selected as Output Trigger
G3CMS1	G3CMS0	
0	0	TPC output group 3 (TP_{15} to TP_{12}) is triggered by compare match in 16-bit timer channel 0
	1	TPC output group 3 (TP_{15} to TP_{12}) is triggered by compare match in 16-bit timer channel 1
1	0	TPC output group 3 (TP_{15} to TP_{12}) is triggered by compare match in 16-bit timer channel 2
	1	

NDERB—Next Data Enable Register B H'FFFA2 TPC

Bit	7	6	5	4	3	2	1	0
	NDER15	NDER14	NDER13	NDER12	NDER11	NDER10	NDER9	NDER8
Initial value	0	0	0	0	0	0	0	0
Read/Write	R/W	R/W	R/W	R/W	R/W	R/W	R/W	R/W

Next data enable 15 to 8

Bits 7 to 0	Description
NDER15 to NDER8	
0	TPC outputs TP_{15} to TP_8 are disabled (NDR15 to NDR8 are not transferred to PB_7 to PB_0)
1	TPC outputs TP_{15} to TP_8 are enabled (NDR15 to NDR8 are transferred to PB_7 to PB_0)

NDERA—Next Data Enable Register A H'FFFA3 TPC

Bit	7	6	5	4	3	2	1	0
	NDER7	NDER6	NDER5	NDER4	NDER3	NDER2	NDER1	NDER0
Initial value	0	0	0	0	0	0	0	0
Read/Write	R/W	R/W	R/W	R/W	R/W	R/W	R/W	R/W

Next data enable 7 to 0

Bits 7 to 0	Description
NDER7 to NDER0	
0	TPC outputs TP_7 to TP_0 are disabled (NDR7 to NDR0 are not transferred to PA_7 to PA_0)
1	TPC outputs TP_7 to TP_0 are enabled (NDR7 to NDR0 are transferred to PA_7 to PA_0)

NDRB—Next Data Register B **H'FFFA4/H'FFFA6** **TPC**

- Same trigger for TPC output groups 2 and 3
  - Address H'FFFA4

Bit	7	6	5	4	3	2	1	0
	NDR15	NDR14	NDR13	NDR12	NDR11	NDR10	NDR9	NDR8
Initial value	0	0	0	0	0	0	0	0
Read/Write	R/W	R/W	R/W	R/W	R/W	R/W	R/W	R/W

Store the next output data for TPC output group 3 Store the next output data for TPC output group 2

  - Address H'FFFA6

Bit	7	6	5	4	3	2	1	0
	—	—	—	—	—	—	—	—
Initial value	1	1	1	1	1	1	1	1
Read/Write	—	—	—	—	—	—	—	—

- Different triggers for TPC output groups 2 and 3
  - Address H'FFFA4

Bit	7	6	5	4	3	2	1	0
	NDR15	NDR14	NDR13	NDR12	—	—	—	—
Initial value	0	0	0	0	1	1	1	1
Read/Write	R/W	R/W	R/W	R/W	—	—	—	—

Store the next output data for TPC output group 3

  - Address H'FFFA6

Bit	7	6	5	4	3	2	1	0
	—	—	—	—	NDR11	NDR10	NDR9	NDR8
Initial value	1	1	1	1	0	0	0	0
Read/Write	—	—	—	—	R/W	R/W	R/W	R/W

Store the next output data for TPC output group 2

NDRA—Next Data Register A **H'FFFA5/H'FFFA7** **TPC**

- Same trigger for TPC output groups 0 and 1
  - Address H'FFFA5

Bit	7	6	5	4	3	2	1	0
	NDR7	NDR6	NDR5	NDR4	NDR3	NDR2	NDR1	NDR0
Initial value	0	0	0	0	0	0	0	0
Read/Write	R/W	R/W	R/W	R/W	R/W	R/W	R/W	R/W

Store the next output data for TPC output group 1 Store the next output data for TPC output group 0

  - Address H'FFFA7

Bit	7	6	5	4	3	2	1	0
	—	—	—	—	—	—	—	—
Initial value	1	1	1	1	1	1	1	1
Read/Write	—	—	—	—	—	—	—	—

- Different triggers for TPC output groups 0 and 1
  - Address H'FFFA5

Bit	7	6	5	4	3	2	1	0
	NDR7	NDR6	NDR5	NDR4	—	—	—	—
Initial value	0	0	0	0	1	1	1	1
Read/Write	R/W	R/W	R/W	R/W	—	—	—	—

Store the next output data for TPC output group 1

  - Address H'FFFA7

Bit	7	6	5	4	3	2	1	0
	—	—	—	—	NDR3	NDR2	NDR1	NDR0
Initial value	1	1	1	1	0	0	0	0
Read/Write	—	—	—	—	R/W	R/W	R/W	R/W

Store the next output data for TPC output group 0

SMR—Serial Mode Register H'FFFB0 SCI0

Bit	7	6	5	4	3	2	1	0
	C/$\overline{A}$	CHR	PE	O/$\overline{E}$	STOP	MP	CKS1	CKS0
Initial value	0	0	0	0	0	0	0	0
Read/Write	R/W	R/W	R/W	R/W	R/W	R/W	R/W	R/W

Clock select 1 and 0

Bit 1	Bit 0	Clock Source
CKS1	CKS0	
0	0	ϕ clock
	1	ϕ/4 clock
1	0	ϕ/16 clock
	1	ϕ/64 clock

Multiprocessor mode

0	Multiprocessor function disabled
1	Multiprocessor format selected

Stop bit length

0	One stop bit
1	Two stop bits

Parity mode

0	Even parity
1	Odd parity

Parity enable

0	Parity bit is not added or checked
1	Parity bit is added and checked

Character length

0	8-bit data
1	7-bit data

Communication mode (for serial communication interface)

0	Asynchronous mode
1	Synchronous mode

GSM mode (for smart card interface)

0	TEND flag is set 12.5 etu* after start bit
1	TEND flag is set 11.0 etu* after start bit

Note: * etu: Elementary time unit (time required to transmit one bit)

BRR—Bit Rate Register **H'FFFB1** **SCI0**

Bit	7	6	5	4	3	2	1	0
Initial value	1	1	1	1	1	1	1	1
Read/Write	R/W	R/W	R/W	R/W	R/W	R/W	R/W	R/W

Serial communication bit rate setting

SCR—Serial Control Register H'FFFB2 SCI0

Bit	7	6	5	4	3	2	1	0
	TIE	RIE	TE	RE	MPIE	TEIE	CKE1	CKE0
Initial value	0	0	0	0	0	0	0	0
Read/Write	R/W	R/W	R/W	R/W	R/W	R/W	R/W	R/W

Receive enable

0	Receiving is disabled
1	Receiving is enabled

Transmit enable

0	Transmitting is disabled
1	Transmitting is enabled

Clock enable 1 and 0
(for serial communication interface)

Bit 1	Bit 0	Description	
CKE1	CKE0		
0	0	Asynchronous mode	Internal clock: SCK pin available for generic I/O
		Synchronous mode	Internal clock: SCK pin used for serial clock output
	1	Asynchronous mode	Internal clock: SCK pin used for clock output
		Synchronous mode	Internal clock: SCK pin used for serial clock output
1	0	Asynchronous mode	External clock: SCK pin used for clock input
		Synchronous mode	External clock: SCK pin used for serial clock input
	1	Asynchronous mode	External clock: SCK pin used for clock input
		Synchronous mode	External clock: SCK pin used for serial clock input

Clock enable 1 and 0 (for smart card interface)

SMR	Bit 1	Bit 0	Description
GM	CKE1	CKE0	
0	0	0	SCK pin available for generic I/O
		1	SCK pin used for clock output
1	0	0	SCK pin output fixed low
		1	SCK pin used for clock output
	1	0	SCK pin output fixed high
		1	SCK pin used for clock output

Transmit-end interrupt enable

0	Transmit-end interrupt requests (TEI) are disabled
1	Transmit-end interrupt requests (TEI) are enabled

Multiprocessor interrupt enable

0	Multiprocessor interrupts are disabled (normal receive operation)
1	Multiprocessor interrupts are enabled

Receive interrupt enable

0	Receive-data-full (RXI) and receive-error (ERI) interrupt requests are disabled
1	Receive-data-full (RXI) and receive-error (ERI) interrupt requests are enabled

Transmit interrupt enable

0	Transmit-data-empty interrupt request (TXI) is disabled
1	Transmit-data-empty interrupt request (TXI) is enabled

TDR—Transmit Data Register H'FFFB3 SCI0

Bit	7	6	5	4	3	2	1	0
Initial value	1	1	1	1	1	1	1	1
Read/Write	R/W	R/W	R/W	R/W	R/W	R/W	R/W	R/W
	Serial transmit data							

SSR—Serial Status Register H'FFFB4 SCI0

Bit	7	6	5	4	3	2	1	0
	TDRE	RDRF	ORER	FER/ERS	PER	TEND	MPB	MPBT
Initial value	1	0	0	0	0	1	0	0
Read/Write	R/(W)*	R/(W)*	R/(W)*	R/(W)*	R/(W)*	R	R	R/W

Multiprocessor bit transfer

0	Multiprocessor bit value in transmit data is 0
1	Multiprocessor bit value in transmit data is 1

Multiprocessor bit

0	Multiprocessor bit value in receive data is 0
1	Multiprocessor bit value in receive data is 1

Transmit end (for serial communication interface)

0	[Clearing condition] Read TDRE when TDRE = 1, then write 0 in TDRE.
1	[Setting conditions] • Reset or transition to standby mode • TE is cleared to 0 in SCR. • TDRE is 1 when last bit of 1-byte serial character is transmitted.

Transmit end (for smart card interface)

0	[Clearing condition] Read TDRE when TDRE = 1, then write 0 in TDRE.
1	[Setting conditions] • Reset or transition to standby mode • TE is cleared to 0 in SCR and FER/ERS is cleared to 0. • TDRE is 1 and FER/ERS is 0 (normal transmission) 2.5 etu* (when GM = 0) or 1.0 etu (when GM = 1) after 1-byte serial character is transmitted.

Note: * etu: Elementary time unit (time required to transmit one bit)

Parity error

0	[Clearing conditions]	• Reset or transition to standby mode • Read PER when PER = 1, then write 0 in PER.
1	[Setting condition]	Parity error (parity of receive data does not match parity setting of O/E bit in SMR)

Framing error (for serial communication interface)

0	[Clearing conditions]	• Reset or transition to standby mode • Read FER when FER = 1, then write 0 in FER.
1	[Setting condition]	Framing error (stop bit is 0)

Error signal status (for smart card interface)

0	[Clearing conditions]	• Reset or transition to standby mode • Read ERS when ERS = 1, then write 0 in ERS.
1	[Setting condition]	A low error signal is received.

Overrun error

0	[Clearing conditions]	• Reset or transition to standby mode • Read ORER when ORER = 1, then write 0 in ORER.
1	[Setting condition]	Overrun error (reception of the next serial data ends when RDRF = 1)

Receive data register full

0	[Clearing conditions]	• Reset or transition to standby mode • Read RDRF when RDRF = 1, then write 0 in RDRF.
1	[Setting condition]	Serial data is received normally and transferred from RSR to RDR.

Transmit data register empty

0	[Clearing condition]	Read TDRE when TDRE = 1, then write 0 in TDRE.
1	[Setting conditions]	• Reset or transition to standby mode • TE is 0 in SCR. • Data is transferred from TDR to TSR, enabling new data to be written in TDR

Note: * Only 0 can be written, to clear the flag.

RDR—Receive Data Register H'FFFB5 SCI0

Bit	7	6	5	4	3	2	1	0
Initial value	0	0	0	0	0	0	0	0
Read/Write	R	R	R	R	R	R	R	R

Serial receive data

SCMR—Smart Card Mode Register H'FFFB6 SCI0

Bit	7	6	5	4	3	2	1	0
	—	—	—	—	SDIR	SINV	—	SMIF
Initial value	1	1	1	1	0	0	1	0
Read/Write	—	—	—	—	R/W	R/W	—	R/W

Smart card interface mode select

0	Smart card interface function is disabled	(Initial value)
1	Smart card interface function is enabled	

Smart card data invert

0	Unmodified TDR contents are transmitted Receive data is stored unmodified in RDR	(Initial value)
1	Inverted 1/0 logic levels of TDR contents are transmitted 1/0 logic levels of received data are inverted before storage in RDR	

Smart card data transfer direction

0	TDR contents are transmitted LSB-first Receive data is stored LSB-first in RDR	(Initial value)
1	TDR contents are transmitted MSB-first Receive data is stored MSB-first in RDR	

SMR—Serial Mode Register H'FFFB8 SCI1

Bit	7	6	5	4	3	2	1	0
	C/$\overline{A}$	CHR	PE	O/$\overline{E}$	STOP	MP	CKS1	CKS0
Initial value	0	0	0	0	0	0	0	0
Read/Write	R/W	R/W	R/W	R/W	R/W	R/W	R/W	R/W

Note: Bit functions are the same as for SCI0.

BRR—Bit Rate Register H'FFFB9 SCI1

Bit	7	6	5	4	3	2	1	0
Initial value	1	1	1	1	1	1	1	1
Read/Write	R/W	R/W	R/W	R/W	R/W	R/W	R/W	R/W

Note: Bit functions are the same as for SCI0.

SCR—Serial Control Register H'FFFBA SCI1

Bit	7	6	5	4	3	2	1	0
	TIE	RIE	TE	RE	MPIE	TEIE	CKE1	CKE0
Initial value	0	0	0	0	0	0	0	0
Read/Write	R/W	R/W	R/W	R/W	R/W	R/W	R/W	R/W

Note: Bit functions are the same as for SCI0.

TDR—Transmit Data Register H'FFFBB SCI1

Bit	7	6	5	4	3	2	1	0
Initial value	1	1	1	1	1	1	1	1
Read/Write	R/W	R/W	R/W	R/W	R/W	R/W	R/W	R/W

Note: Bit functions are the same as for SCI0.

SSR—Serial Status Register H'FFFBC SCI1

Bit	7	6	5	4	3	2	1	0
	TDRE	RDRF	ORER	FER/ERS	PER	TEND	MPB	MPBT
Initial value	0	0	0	0	0	1	0	0
Read/Write	R/(W)*	R/(W)*	R/(W)*	R/(W)*	R/(W)*	R	R	R/W

Notes: Bit functions are the same as for SCI0.
* Only 0 can be written to clear the flag.

RDR—Receive Data Register H'FFFBD SCI1

Bit	7	6	5	4	3	2	1	0
Initial value	0	0	0	0	0	0	0	0
Read/Write	R	R	R	R	R	R	R	R

Note: Bit functions are the same as for SCI0.

SCMR—Smart Card Mode Register H'FFFBE SCI1

Bit	7	6	5	4	3	2	1	0
	—	—	—	—	SDIR	SINV	—	SMIF
Initial value	1	1	1	1	0	0	1	0
Read/Write	—	—	—	—	R/W	R/W	—	R/W

Note: Bit functions are the same as for SCI0.

P4DR—Port 4 Data Register H'FFFD3 Port 4

Bit	7	6	5	4	3	2	1	0
	$P4_7$	$P4_6$	$P4_5$	$P4_4$	$P4_3$	$P4_2$	$P4_1$	$P4_0$
Initial value	0	0	0	0	0	0	0	0
Read/Write	R/W	R/W	R/W	R/W	R/W	R/W	R/W	R/W

Data for port 4 pins

P6DR—Port 6 Data Register H'FFFD5 Port 6

Bit	7	6	5	4	3	2	1	0
	$P6_7$	$P6_6$	$P6_5$	$P6_4$	$P6_3$	$P6_2$	$P6_1$	$P6_0$
Initial value	1	0	0	0	0	0	0	0
Read/Write	R	R/W	R/W	R/W	R/W	R/W	R/W	R/W

Data for port 6 pins

P7DR—Port 7 Data Register H'FFFD6 Port 7

Bit	7	6	5	4	3	2	1	0
	$P7_7$	$P7_6$	$P7_5$	$P7_4$	$P7_3$	$P7_2$	$P7_1$	$P7_0$
Initial value	— *	— *	— *	— *	— *	— *	— *	— *
Read/Write	R	R	R	R	R	R	R	R

Data for port 7 pins

Note: * Determined by pins $P7_7$ to $P7_0$.

P8DR—Port 8 Data Register H'FFFD7 Port 8

Bit	7	6	5	4	3	2	1	0
	—	—	—	$P8_4$	$P8_3$	$P8_2$	$P8_1$	$P8_0$
Initial value	1	1	1	0	0	0	0	0
Read/Write	—	—	—	R/W	R/W	R/W	R/W	R/W

Data for port 8 pins

P9DR—Port 9 Data Register H'FFFD8 Port 9

Bit	7	6	5	4	3	2	1	0
	—	—	$P9_5$	$P9_4$	$P9_3$	$P9_2$	$P9_1$	$P9_0$
Initial value	1	1	0	0	0	0	0	0
Read/Write	—	—	R/W	R/W	R/W	R/W	R/W	R/W

Data for port 9 pins

PADR—Port A Data Register H'FFFD9 Port A

Bit	7	6	5	4	3	2	1	0
	PA_7	PA_6	PA_5	PA_4	PA_3	PA_2	PA_1	PA_0
Initial value	0	0	0	0	0	0	0	0
Read/Write	R/W	R/W	R/W	R/W	R/W	R/W	R/W	R/W

Data for port A pins

PBDR—Port B Data Register H'FFFDA Port B

Bit	7	6	5	4	3	2	1	0
	PB_7	PB_6	PB_5	PB_4	PB_3	PB_2	PB_1	PB_0
Initial value	0	0	0	0	0	0	0	0
Read/Write	R/W	R/W	R/W	R/W	R/W	R/W	R/W	R/W

Data for port B pins

ADDRA H/L—A/D Data Register A H/L H'FFFE0, H'FFFE1 A/D

Bit	15	14	13	12	11	10	9	8	7	6	5	4	3	2	1	0
	AD9	AD8	AD7	AD6	AD5	AD4	AD3	AD2	AD1	AD0	—	—	—	—	—	—
Initial value	0	0	0	0	0	0	0	0	0	0	0	0	0	0	0	0
Read/Write	R	R	R	R	R	R	R	R	R	R	R	R	R	R	R	R
	ADDRAH								ADDRAL							

A/D conversion data
10-bit data giving an A/D conversion result

ADDRB H/L—A/D Data Register B H/L H'FFFE2, H'FFFE3 A/D

Bit	15	14	13	12	11	10	9	8	7	6	5	4	3	2	1	0
	AD9	AD8	AD7	AD6	AD5	AD4	AD3	AD2	AD1	AD0	—	—	—	—	—	—
Initial value	0	0	0	0	0	0	0	0	0	0	0	0	0	0	0	0
Read/Write	R	R	R	R	R	R	R	R	R	R	R	R	R	R	R	R
	ADDRBH								ADDRBL							

A/D conversion data
10-bit data giving an A/D conversion result

ADDRC H/L—A/D Data Register C H/L H'FFFE4, H'FFFE5 A/D

Bit	15	14	13	12	11	10	9	8	7	6	5	4	3	2	1	0
	AD9	AD8	AD7	AD6	AD5	AD4	AD3	AD2	AD1	AD0	—	—	—	—	—	—
Initial value	0	0	0	0	0	0	0	0	0	0	0	0	0	0	0	0
Read/Write	R	R	R	R	R	R	R	R	R	R	R	R	R	R	R	R
	ADDRCH								ADDRCL							

A/D conversion data
10-bit data giving an A/D conversion result

ADDRD H/L—A/D Data Register D H/L H'FFFE6, H'FFFE7 A/D

Bit	15	14	13	12	11	10	9	8	7	6	5	4	3	2	1	0
	AD9	AD8	AD7	AD6	AD5	AD4	AD3	AD2	AD1	AD0	—	—	—	—	—	—
Initial value	0	0	0	0	0	0	0	0	0	0	0	0	0	0	0	0
Read/Write	R	R	R	R	R	R	R	R	R	R	R	R	R	R	R	R
	ADDRDH								ADDRDL							

A/D conversion data
10-bit data giving an A/D conversion result

ADCR—A/D Control Register H'FFFE9 A/D

Bit	7	6	5	4	3	2	1	0
	TRGE	—	—	—	—	—	—	—
Initial value	0	1	1	1	1	1	1	0
Read/Write	R/W	—	—	—	—	—	—	R/W

Trigger Enable

0	A/D conversion start by external trigger or 8-bit timer compare match is disabled
1	A/D conversion is started by falling edge of external trigger signal ($\overline{\text{ADTRG}}$) or 8-bit timer compare match

ADCSR—A/D Control/Status Register H'FFFE8 A/D

Bit	7	6	5	4	3	2	1	0
	ADF	ADIE	ADST	SCAN	CKS	CH2	CH1	CH0
Initial value	0	0	0	0	0	0	0	0
Read/Write	R/(W)*	R/W	R/W	R/W	R/W	R/W	R/W	R/W

Clock select

0	Conversion time = 134 states (maximum)
1	Conversion time = 70 states (maximum)

Channel select 2 to 0

Group Selection	Channel Selection		Description	
CH2	CH1	CH0	Single Mode	Scan Mode
0	0	0	AN_0	AN_0
		1	AN_1	AN_0, AN_1
	1	0	AN_2	AN_0 to AN_2
		1	AN_3	AN_0 to AN_3
1	0	0	AN_4	AN_4
		1	AN_5	AN_4, AN_5
	1	0	AN_6	AN_4 to AN_6
		1	AN_7	AN_4 to AN_7

Scan mode

0	Single mode
1	Scan mode

A/D start

0	A/D conversion is stopped
1	1. Single mode: A/D conversion starts; ADST is automatically cleared to 0 when conversion ends 2. Scan mode: A/D conversion starts and continues, cycling among the selected channels ADST is cleared to 0 by software, by a reset, or by a transition to standby mode

A/D interrupt enable

0	A/D end interrupt request is disabled
1	A/D end interrupt request is enabled

A/D end flag

0	[Clearing condition] Read ADF when ADF = 1, then write 0 in ADF
1	[Setting conditions] • Single mode: A/D conversion ends • Scan mode: A/D conversion ends in all selected channels

Note: * Only 0 can be written to clear the flag.

Appendix C I/O Port Block Diagrams

C.1 Port 4 Block Diagram

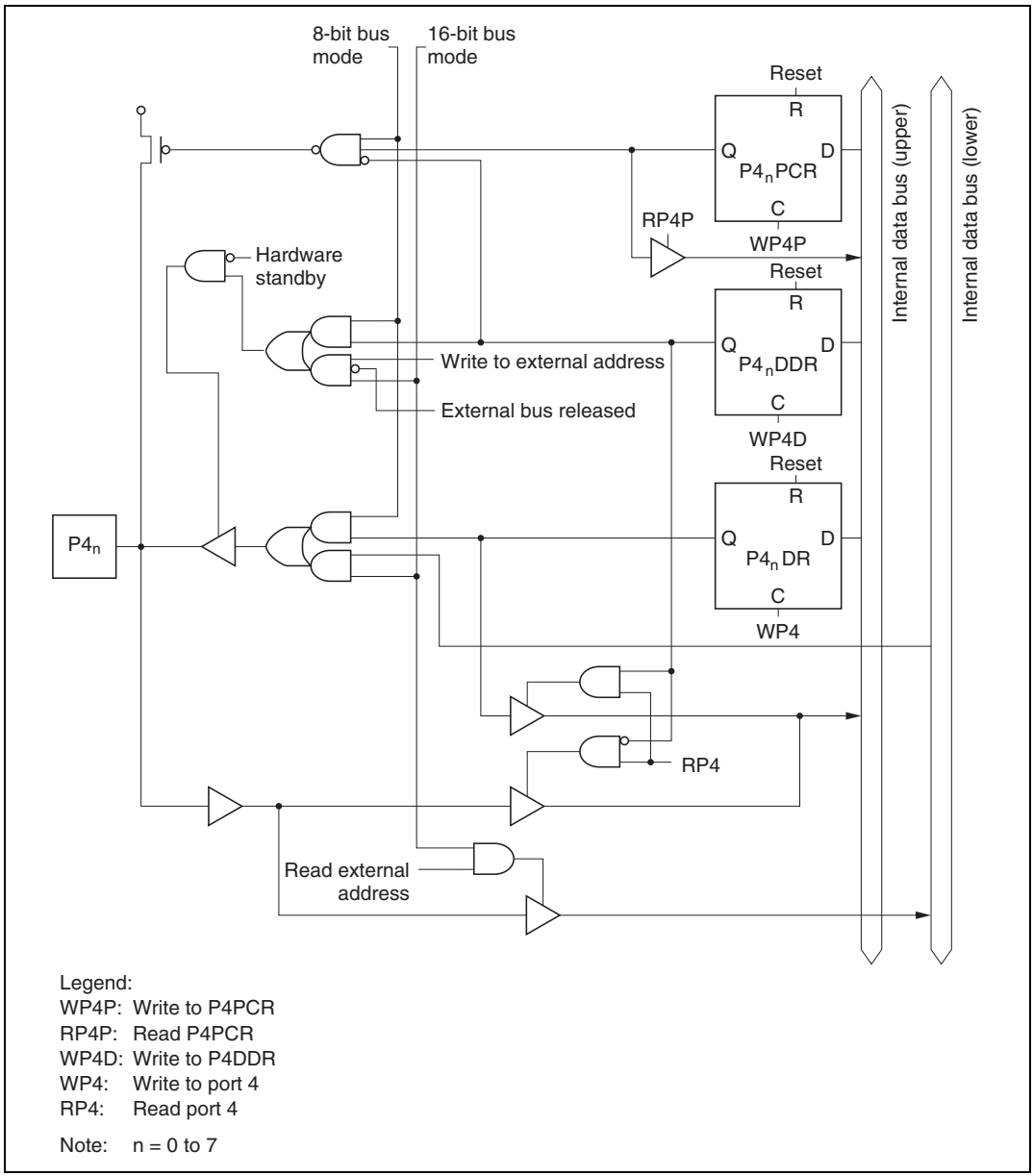

Figure C.1 Port 4 Block Diagram

C.2 Port 6 Block Diagrams

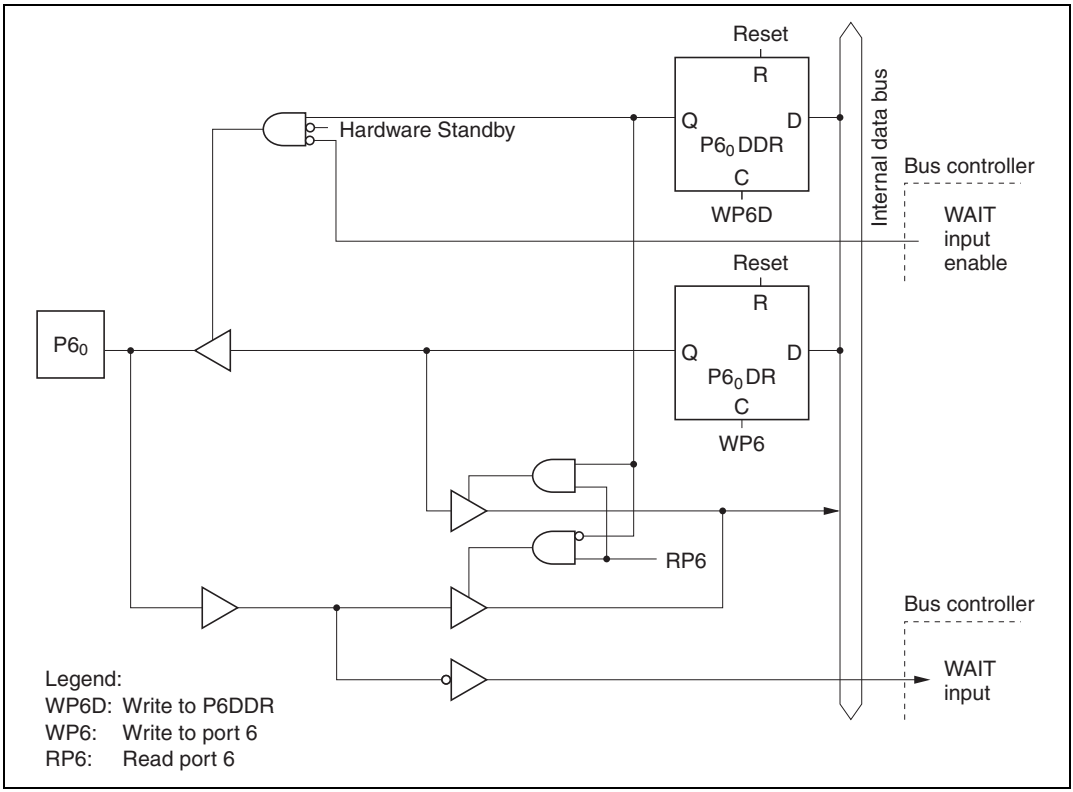

Figure C.2 (a) Port 6 Block Diagram (Pin $P6_0$)

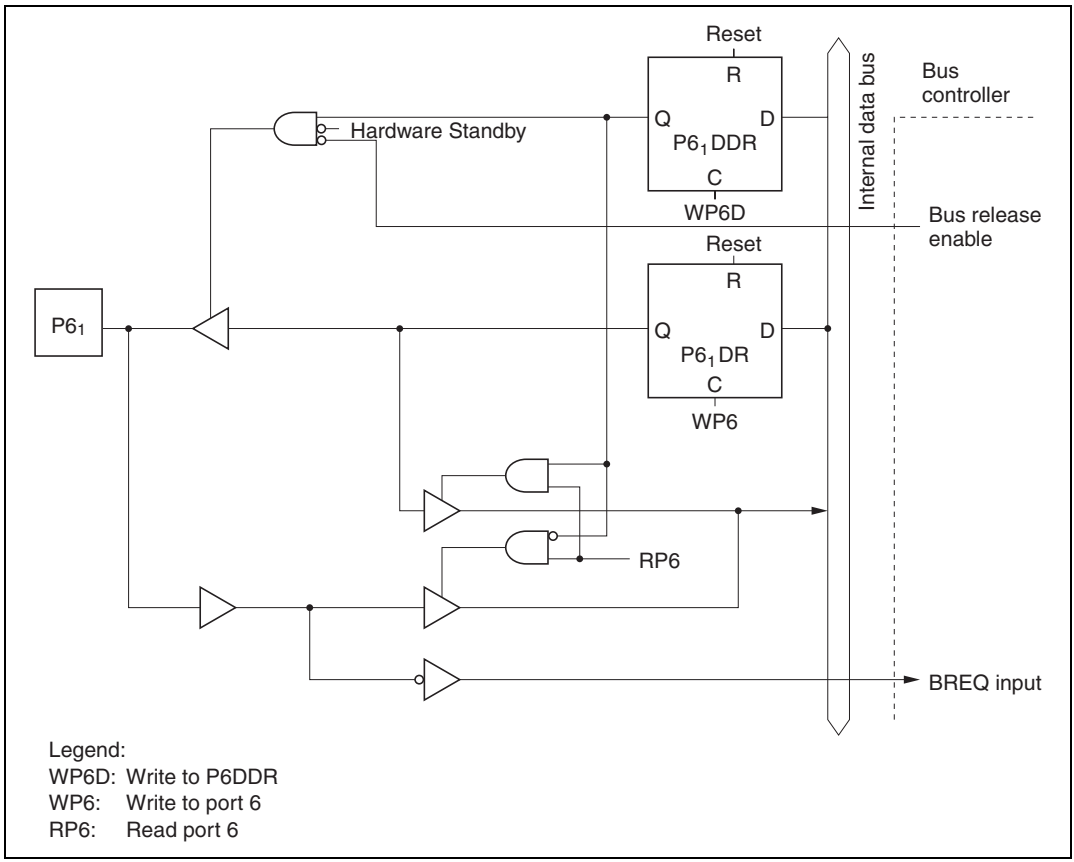

Figure C.2 (b) Port 6 Block Diagram (Pin $P6_1$)

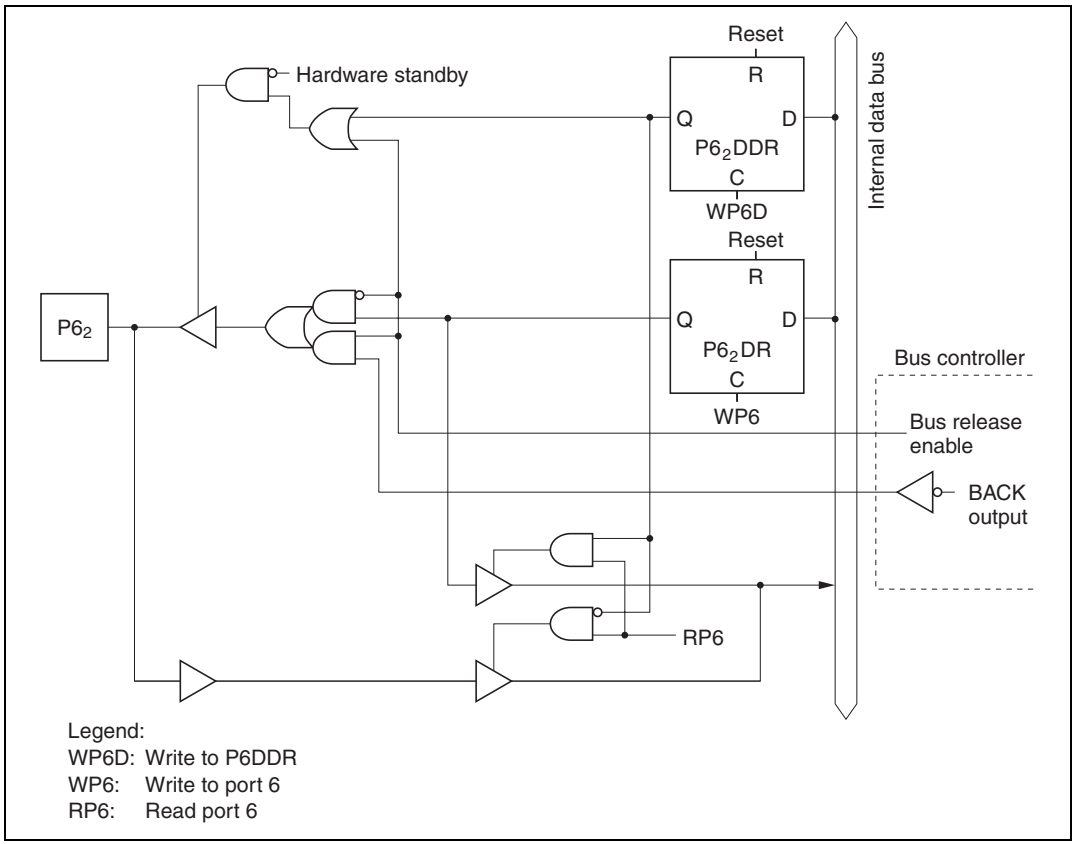

Figure C.2 (c) Port 6 Block Diagram (Pin $P6_2$)

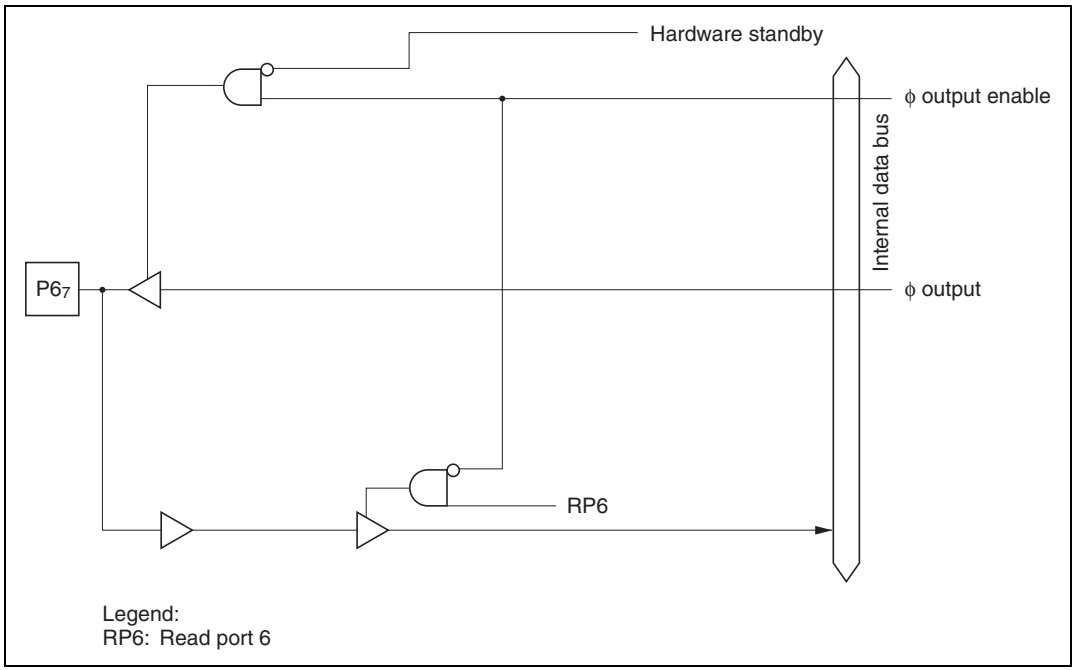

Figure C.2 (d) Port 6 Block Diagram (Pin $P6_7$)

C.3 Port 7 Block Diagrams

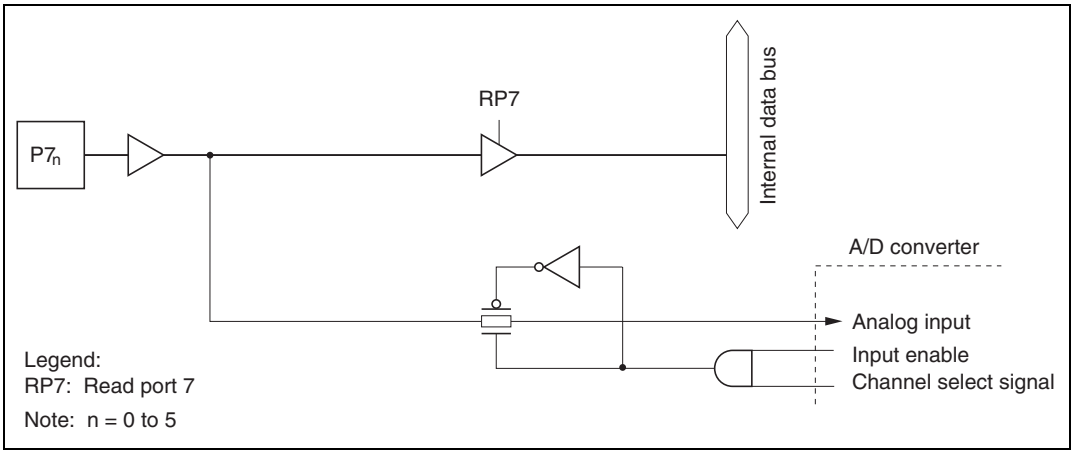

Figure C.3 (a) Port 7 Block Diagram (Pins $P7_0$ to $P7_5$)

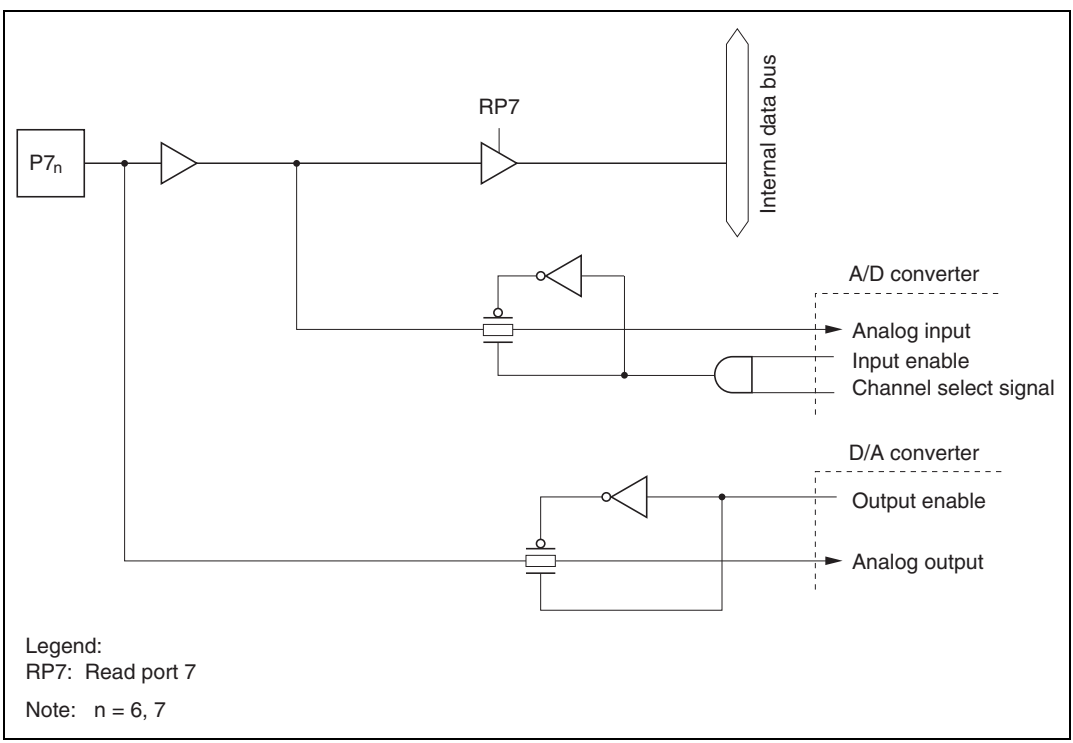

Figure C.3 (b) Port 7 Block Diagram (Pins $P7_6$ and $P7_7$)

C.4 Port 8 Block Diagrams

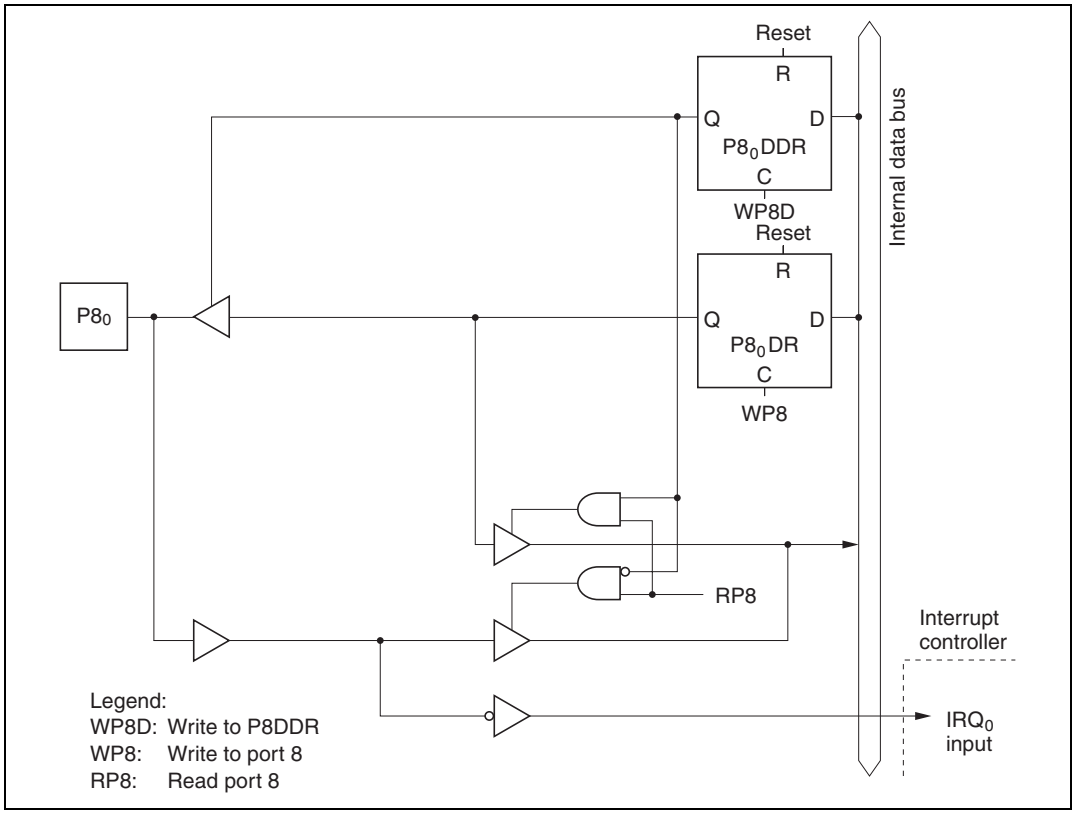

Figure C.4 (a) Port 8 Block Diagram (Pin $P8_0$)

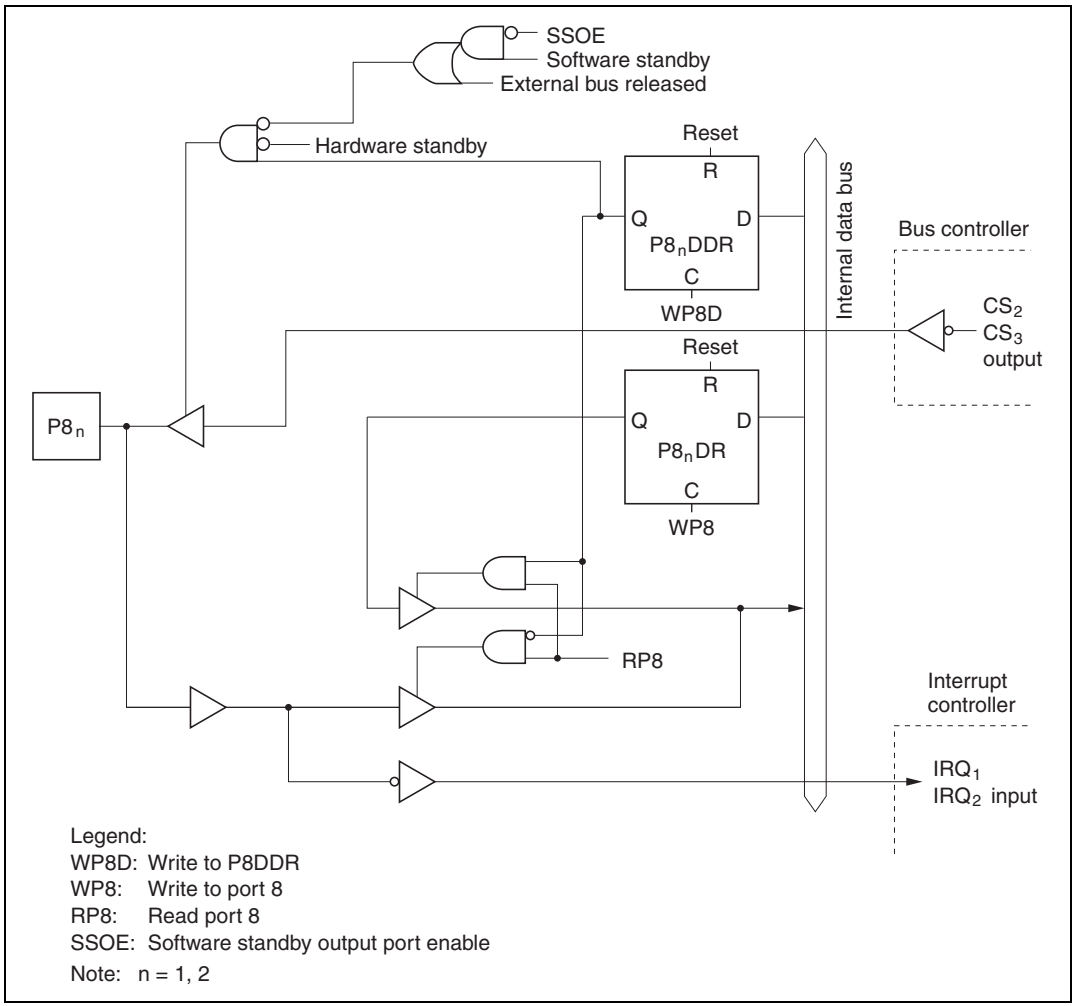

Figure C.4 (b) Port 8 Block Diagram (Pins $P8_1$ and $P8_2$)

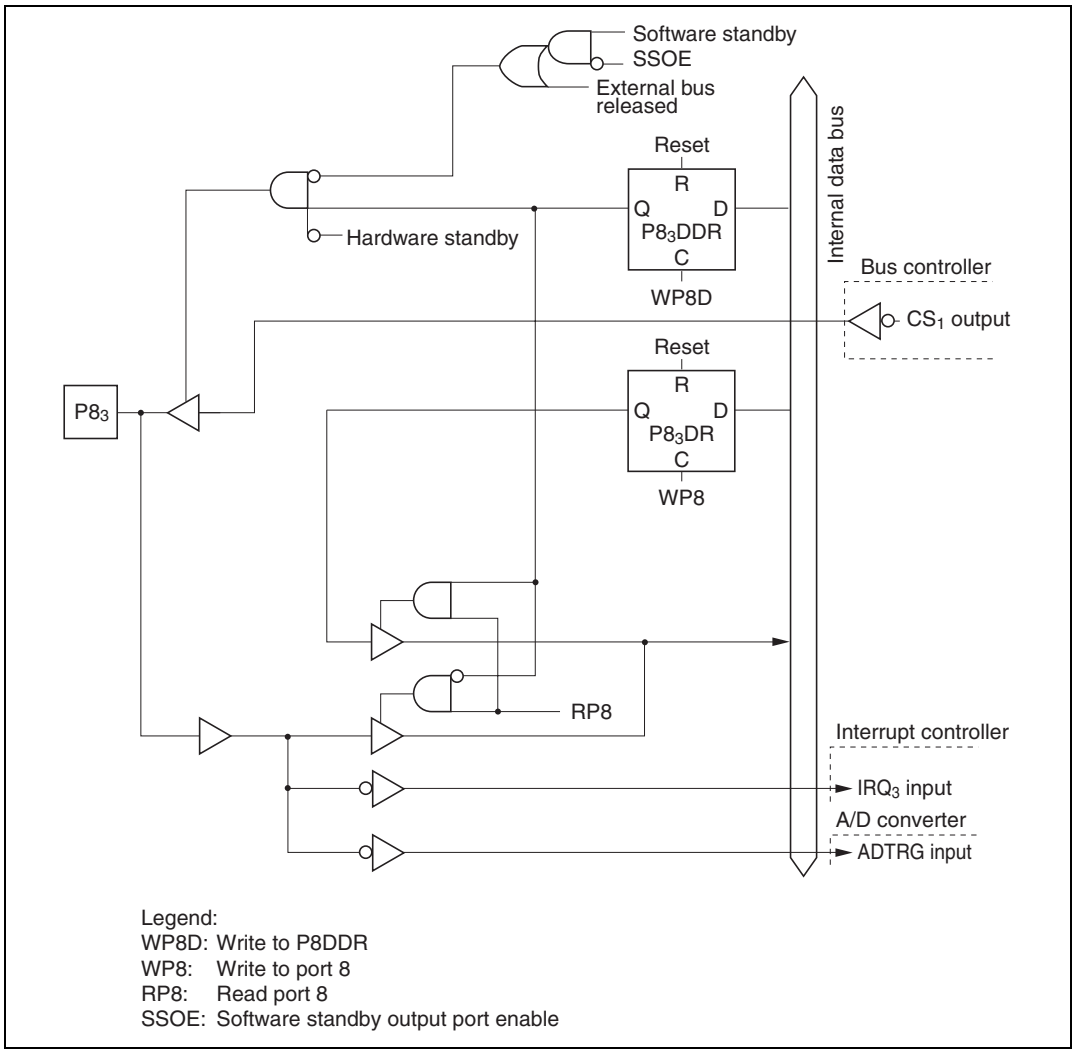

Figure C.4 (c) Port 8 Block Diagram (Pin $P8_3$)

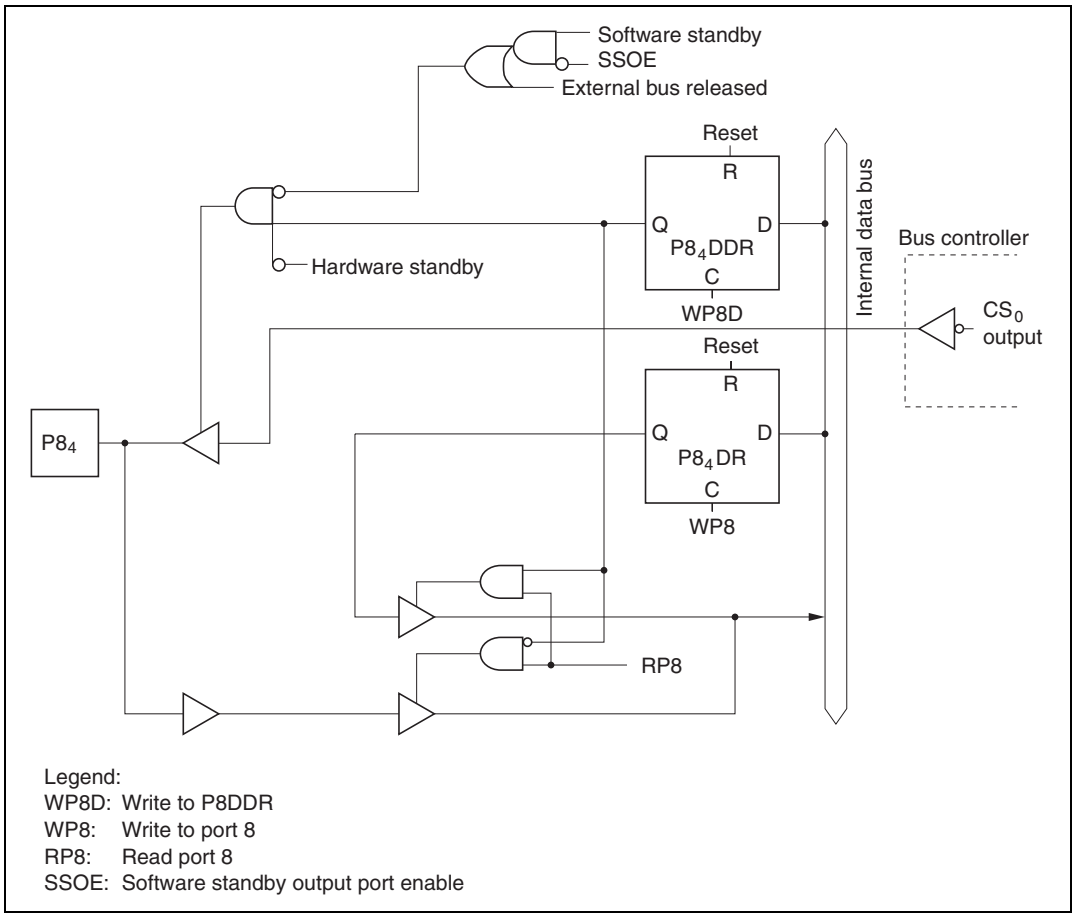

Figure C.4 (d) Port 8 Block Diagram (Pin $P8_4$)

C.5 Port 9 Block Diagrams

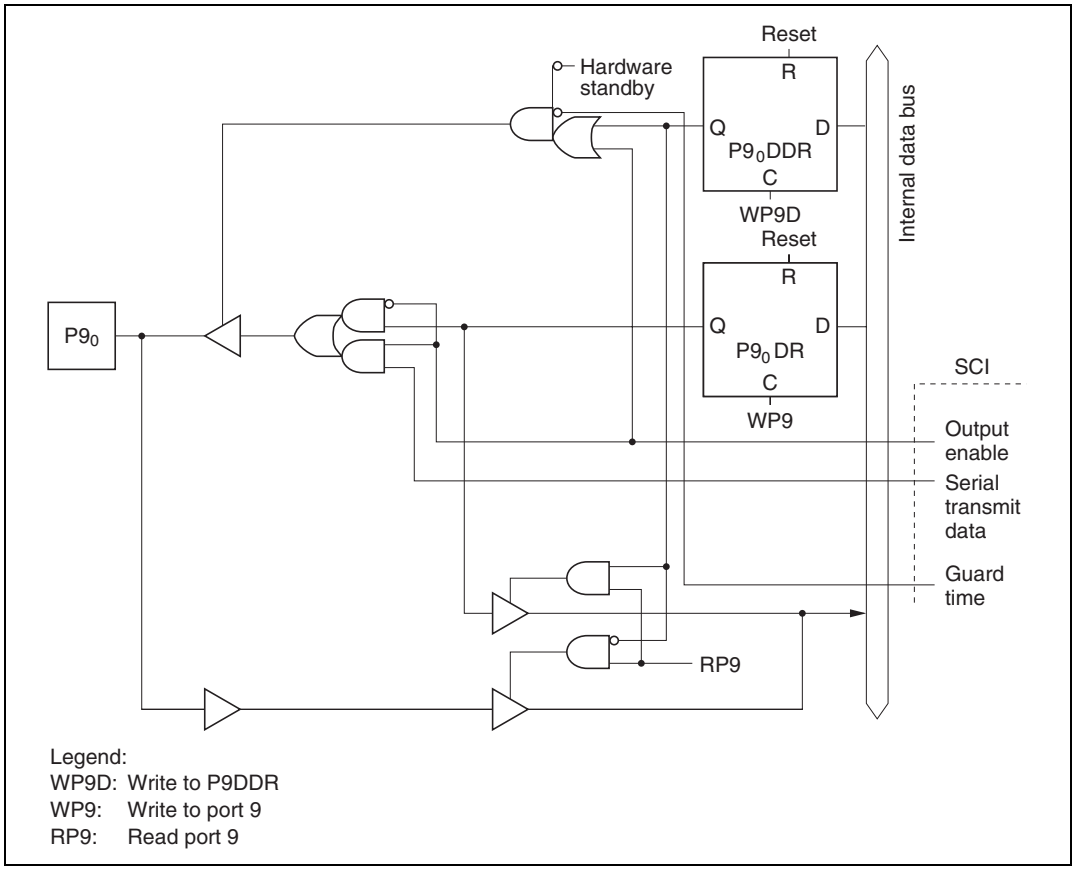

Figure C.5 (a) Port 9 Block Diagram (Pin $P9_0$)

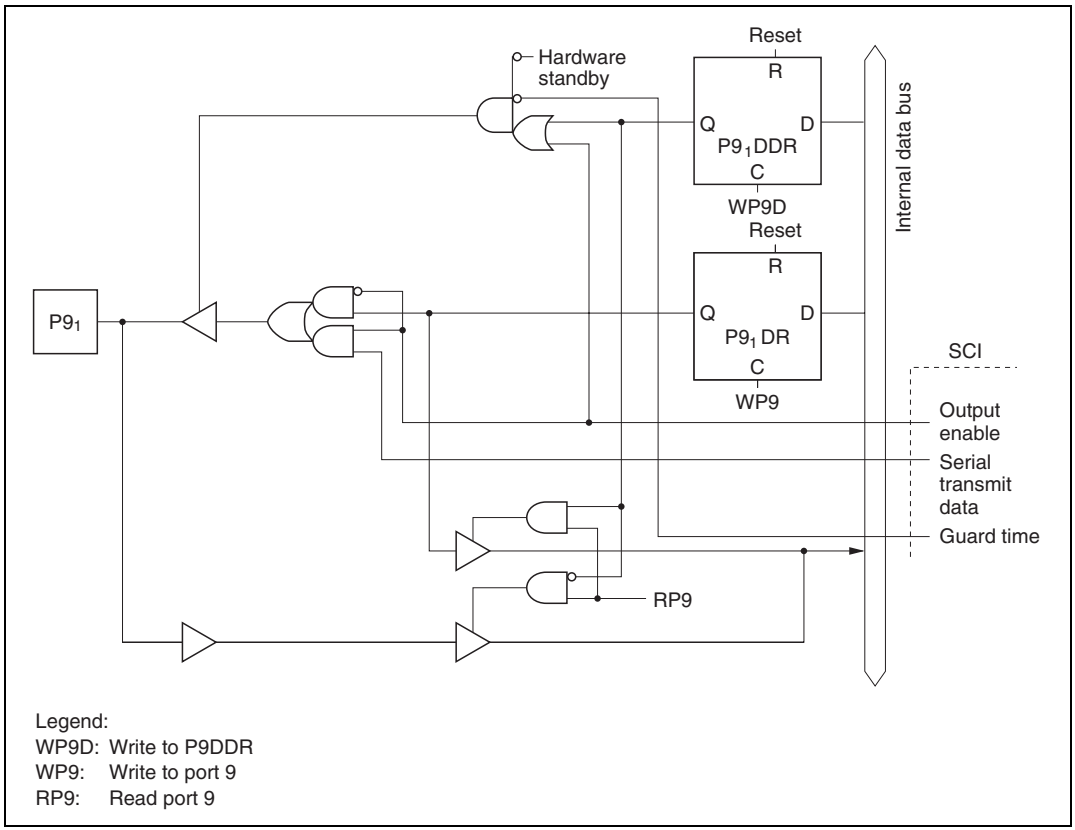

Figure C.5 (b) Port 9 Block Diagram (Pin $P9_1$)

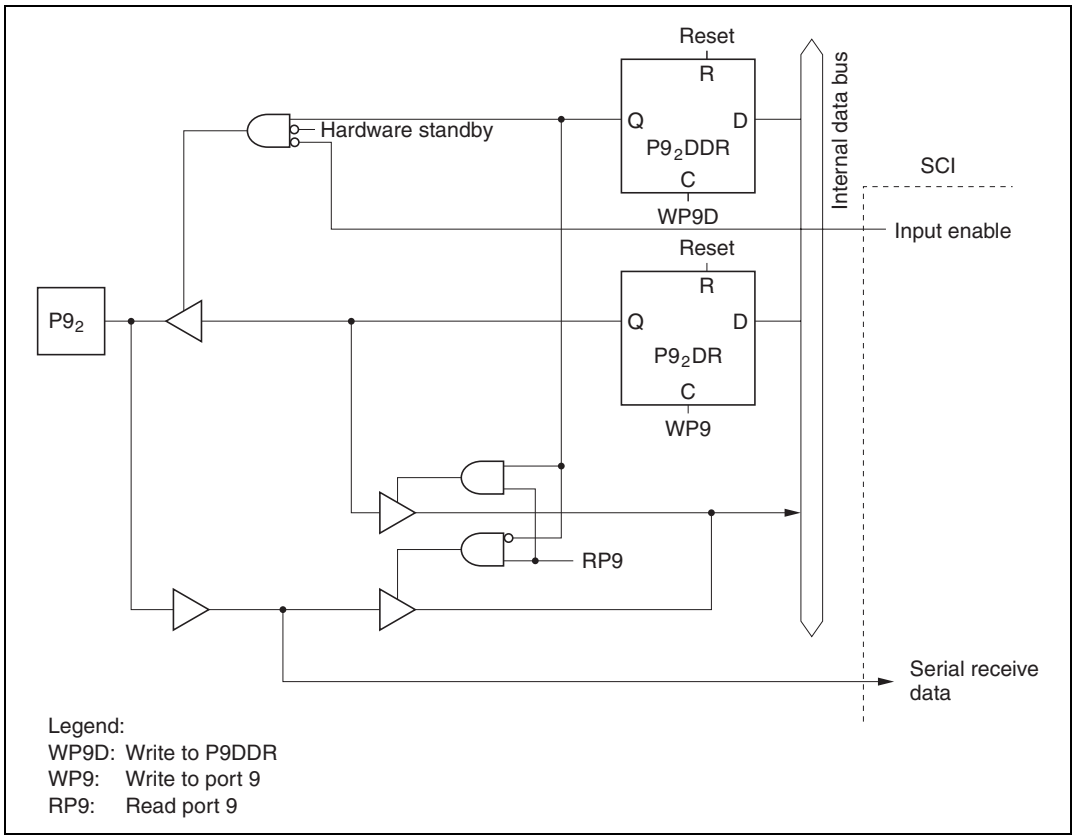

Figure C.5 (c) Port 9 Block Diagram (Pin $P9_2$)

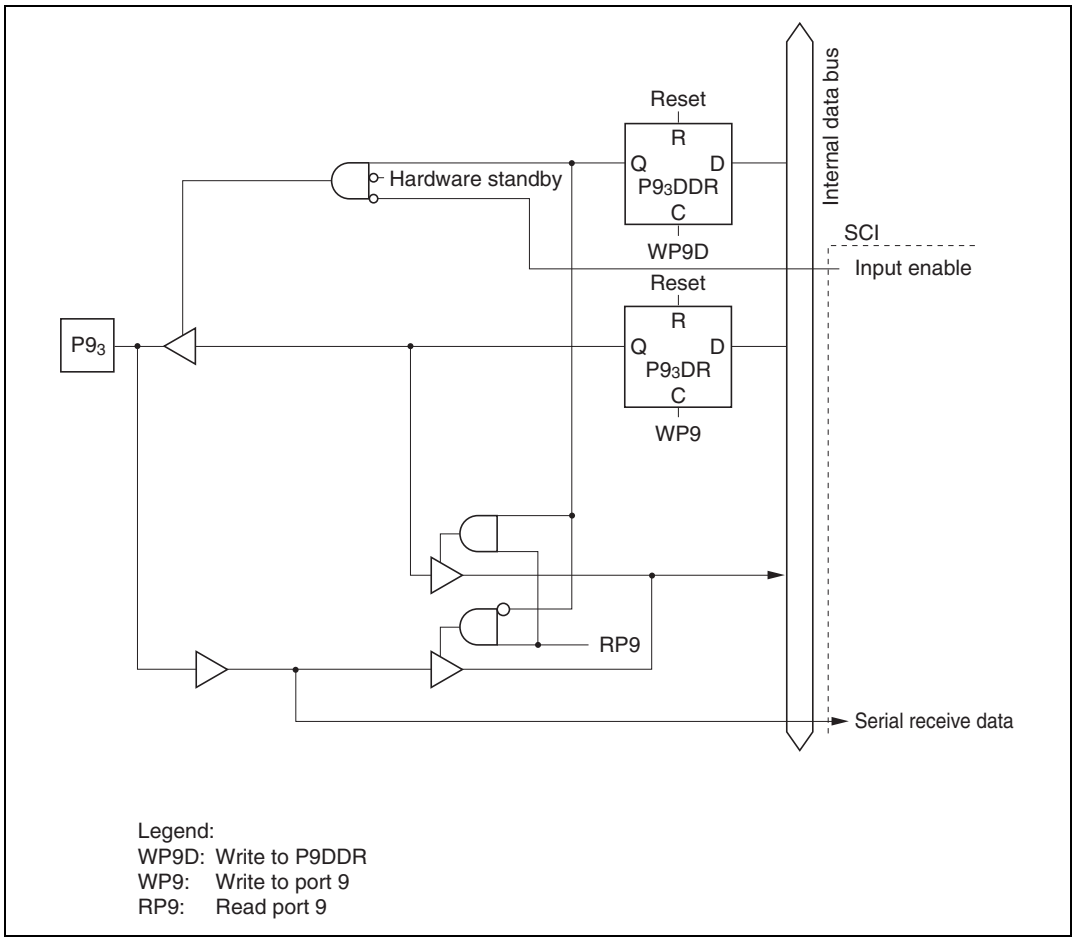

Figure C.5 (d) Port 9 Block Diagram (Pin $P9_3$)

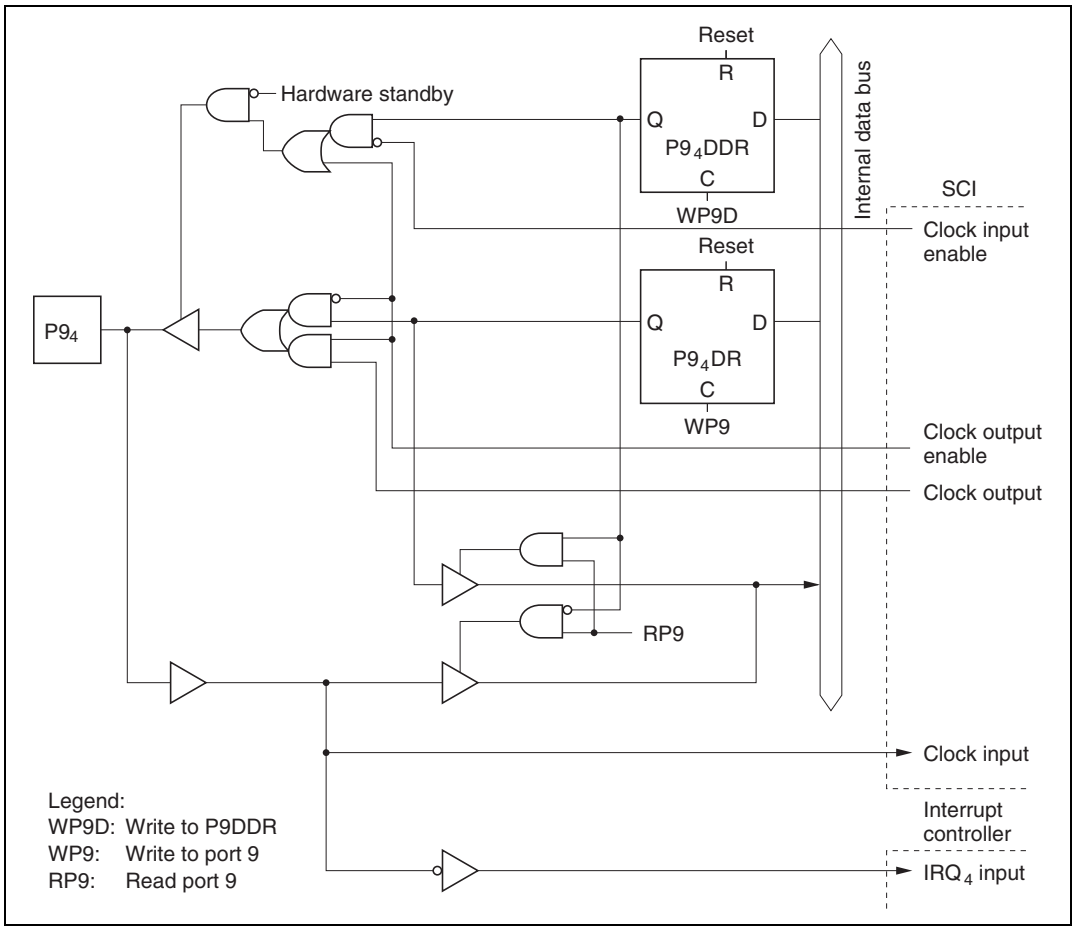

Figure C.5 (e) Port 9 Block Diagram (Pin $P9_4$)

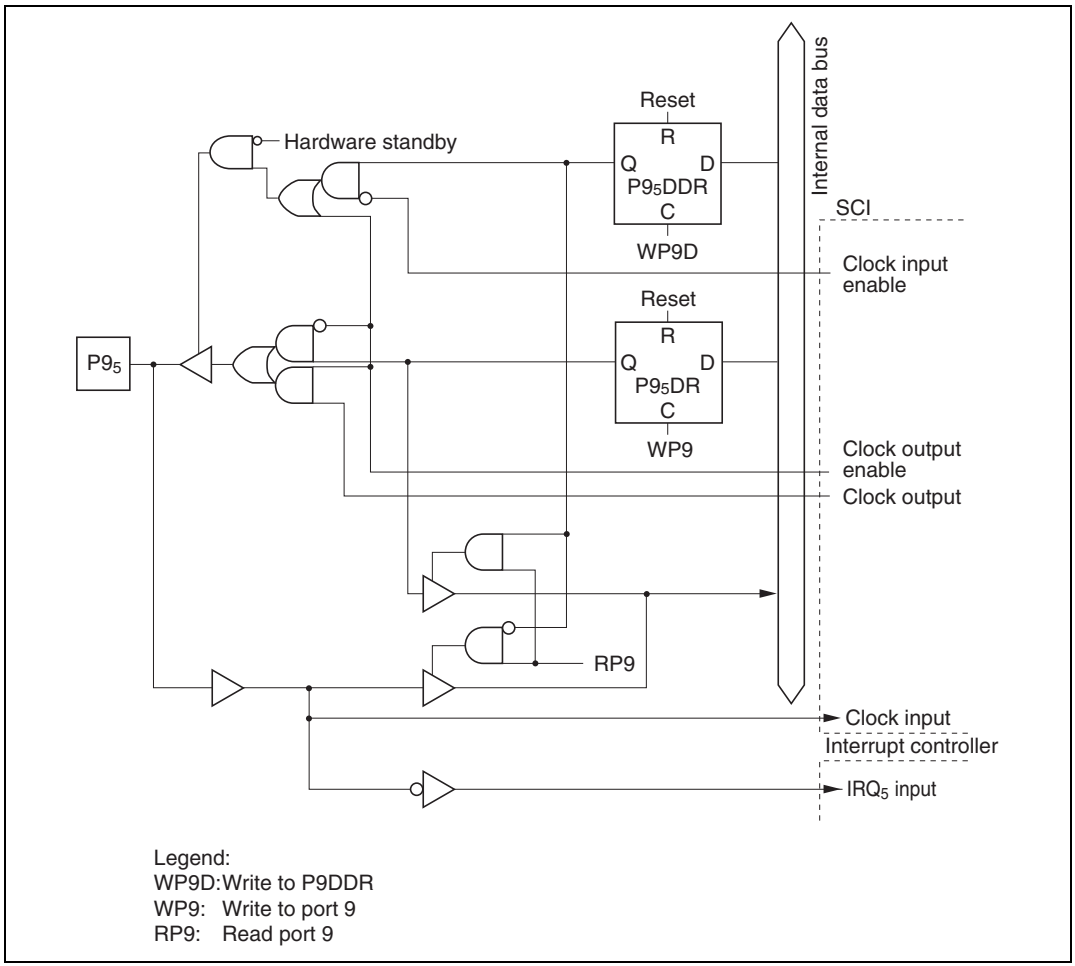

Figure C.5 (f) Port 9 Block Diagram (Pin $P9_5$)

C.6 Port A Block Diagrams

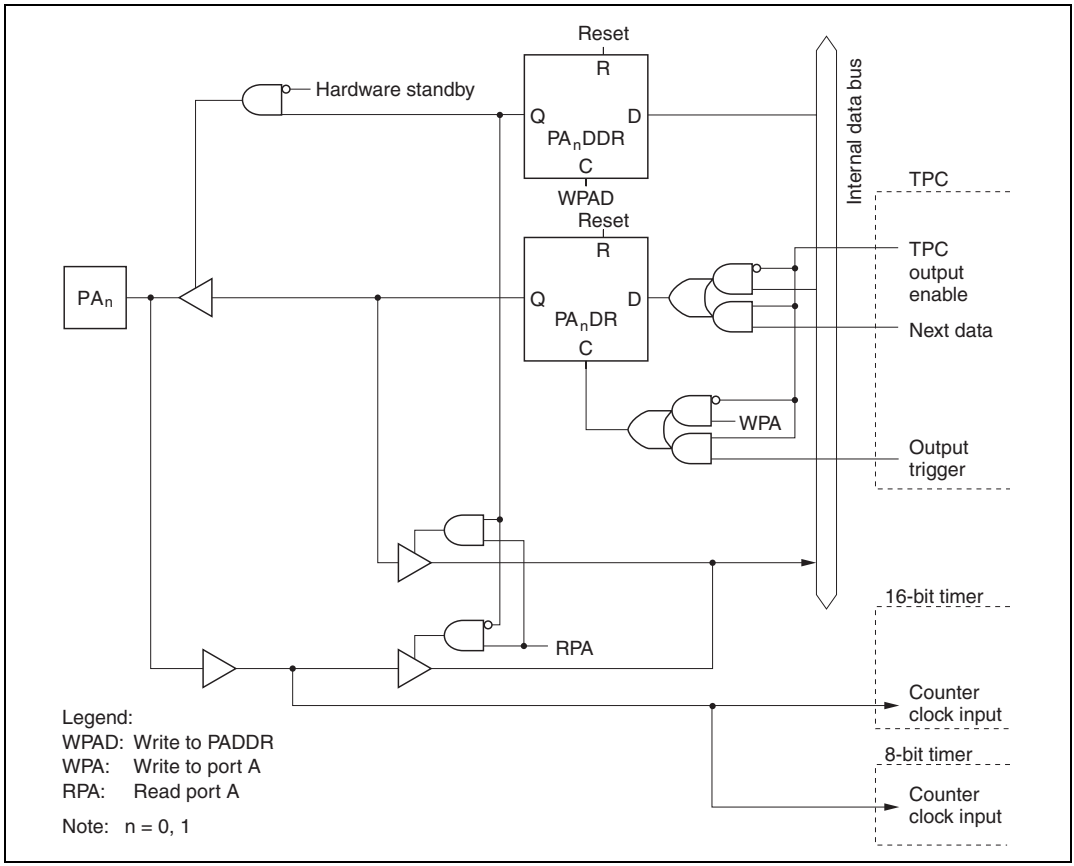

Figure C.6 (a) Port A Block Diagram (Pins PA_0 and PA_1)

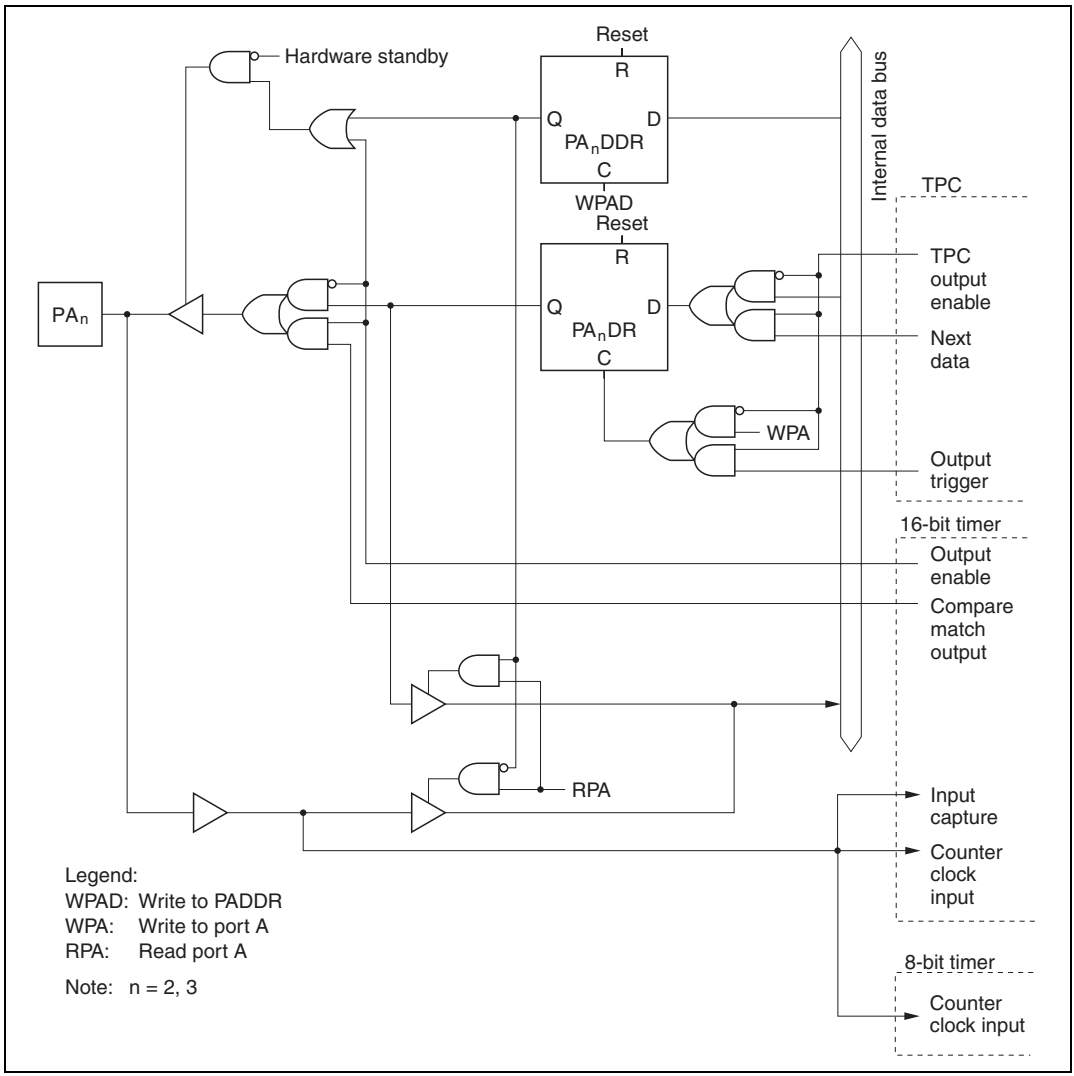

Figure C.6 (b) Port A Block Diagram (Pins PA_2 and PA_3)

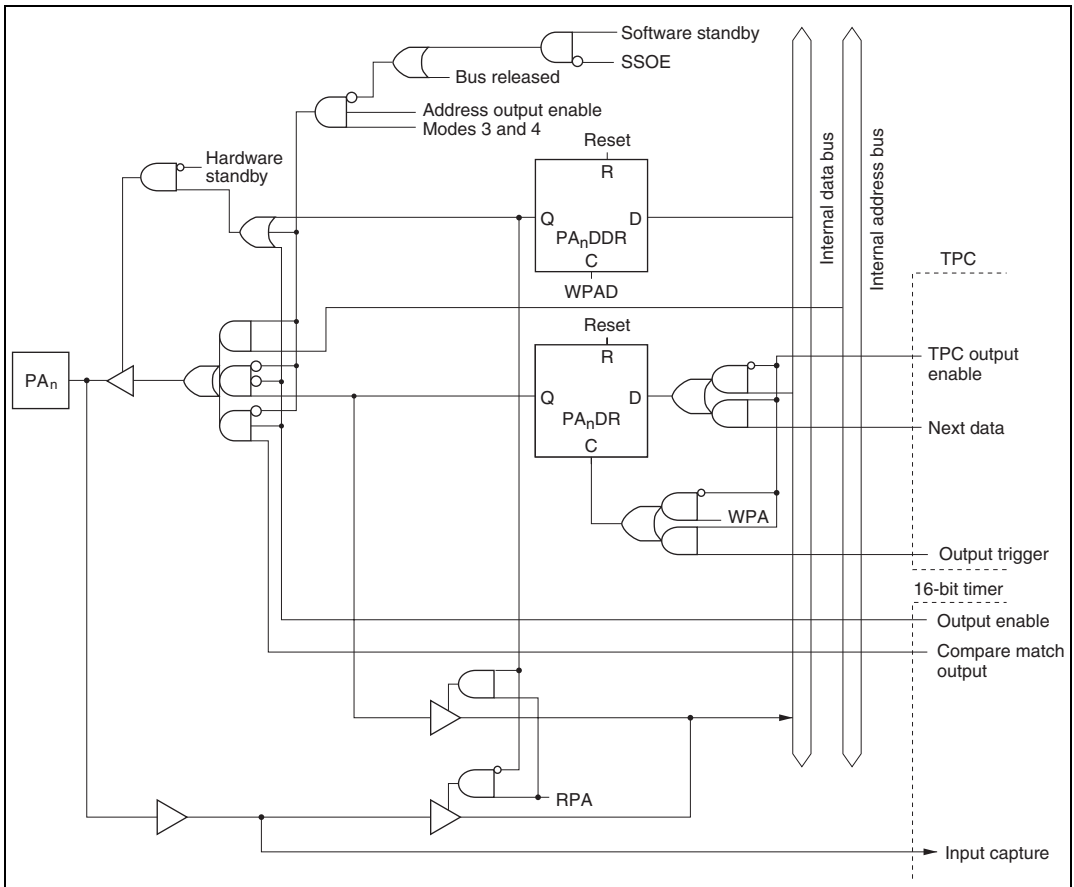

Legend:
WPAD: Write to PADDR
WPA: Write to port A
RPA: Read port A
SSOE: Software standby output port enable

Note: n = 4 to 7
The PA_7 address output enable setting is fixed at 1 in modes 3 and 4.

Figure C.6 (c) Port A Block Diagram (Pins PA_4 to PA_7)

C.7 Port B Block Diagrams

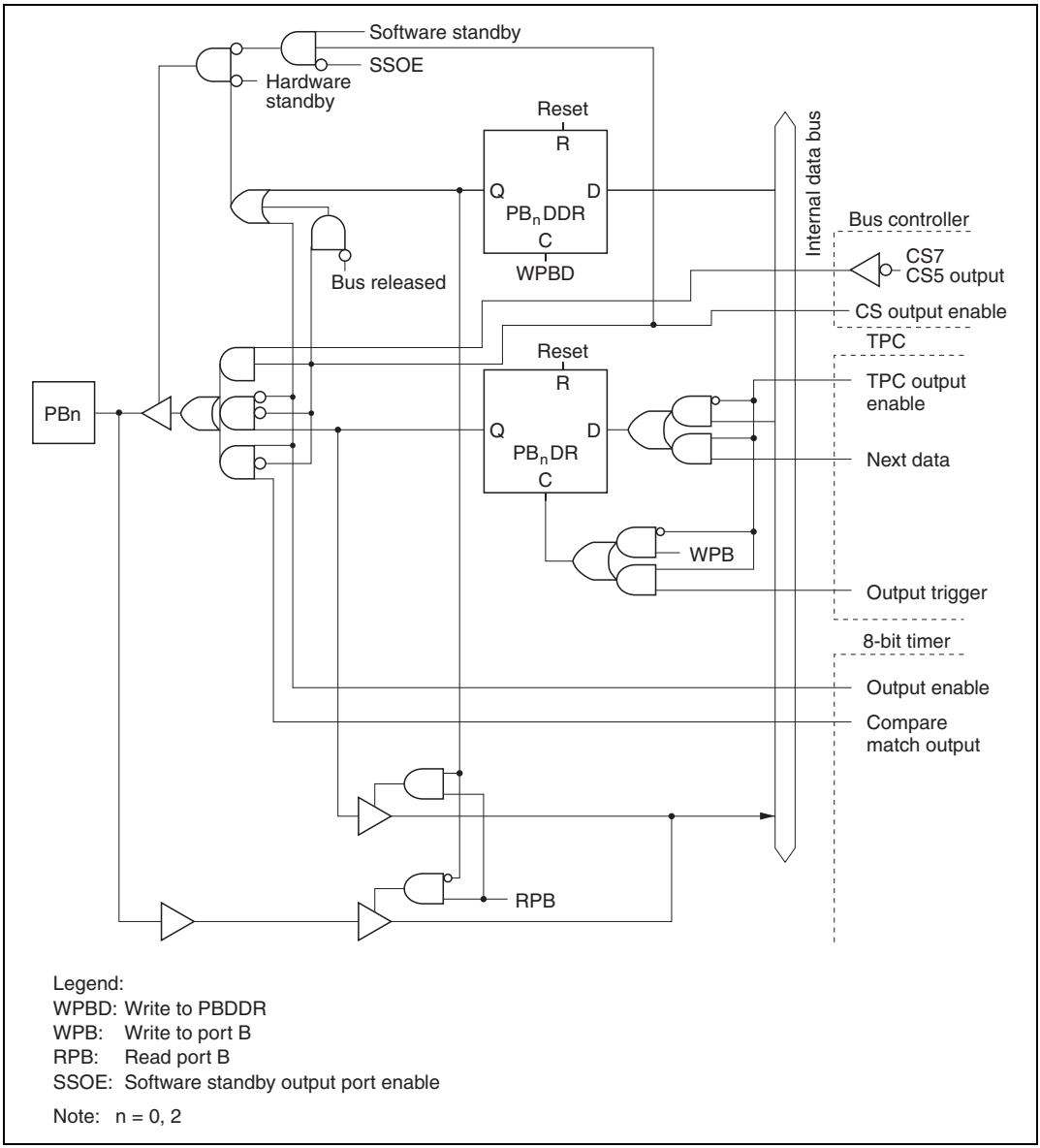

Figure C.7 (a) Port B Block Diagram (Pins PB_0 and PB_2)

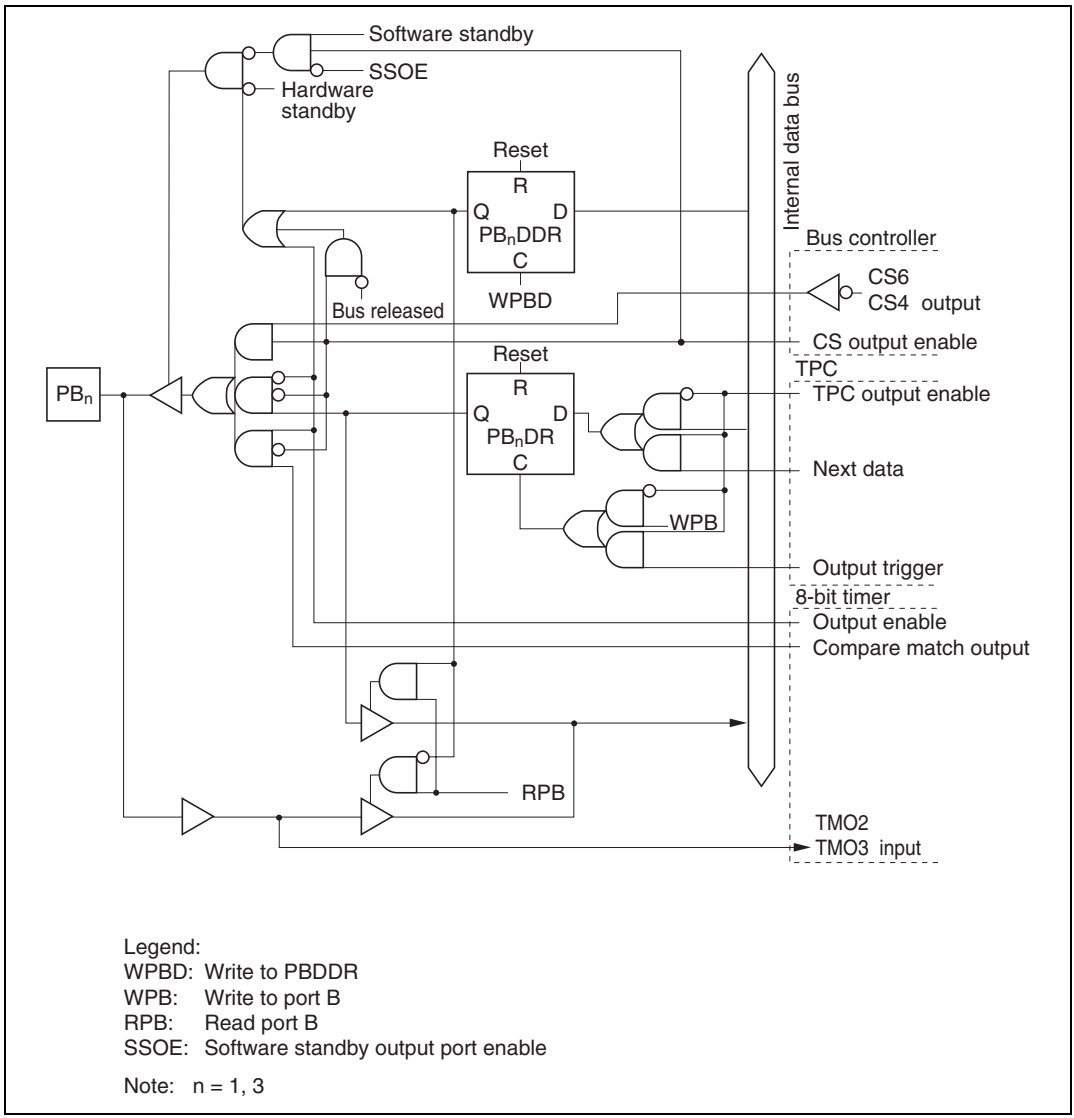

Figure C.7 (b) Port B Block Diagram (Pins PB_1 and PB_3)

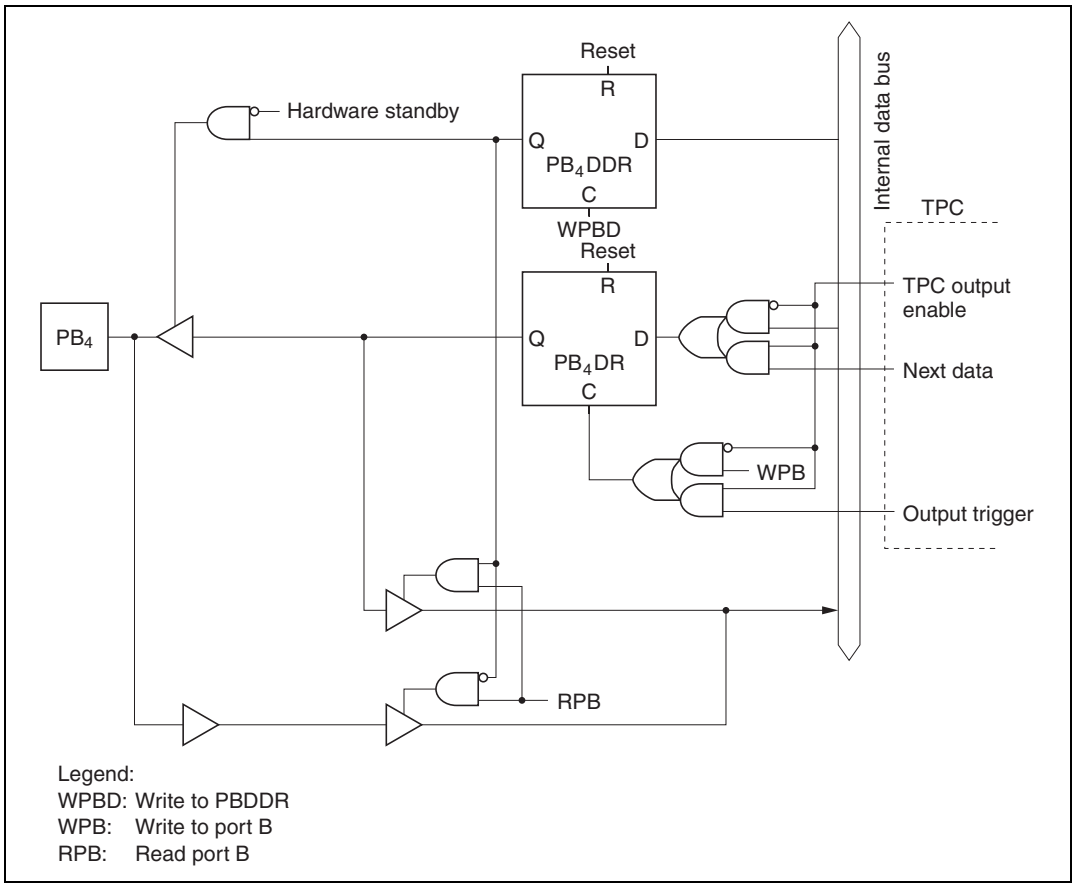

Figure C.7 (c) Port B Block Diagram (Pin PB_4)

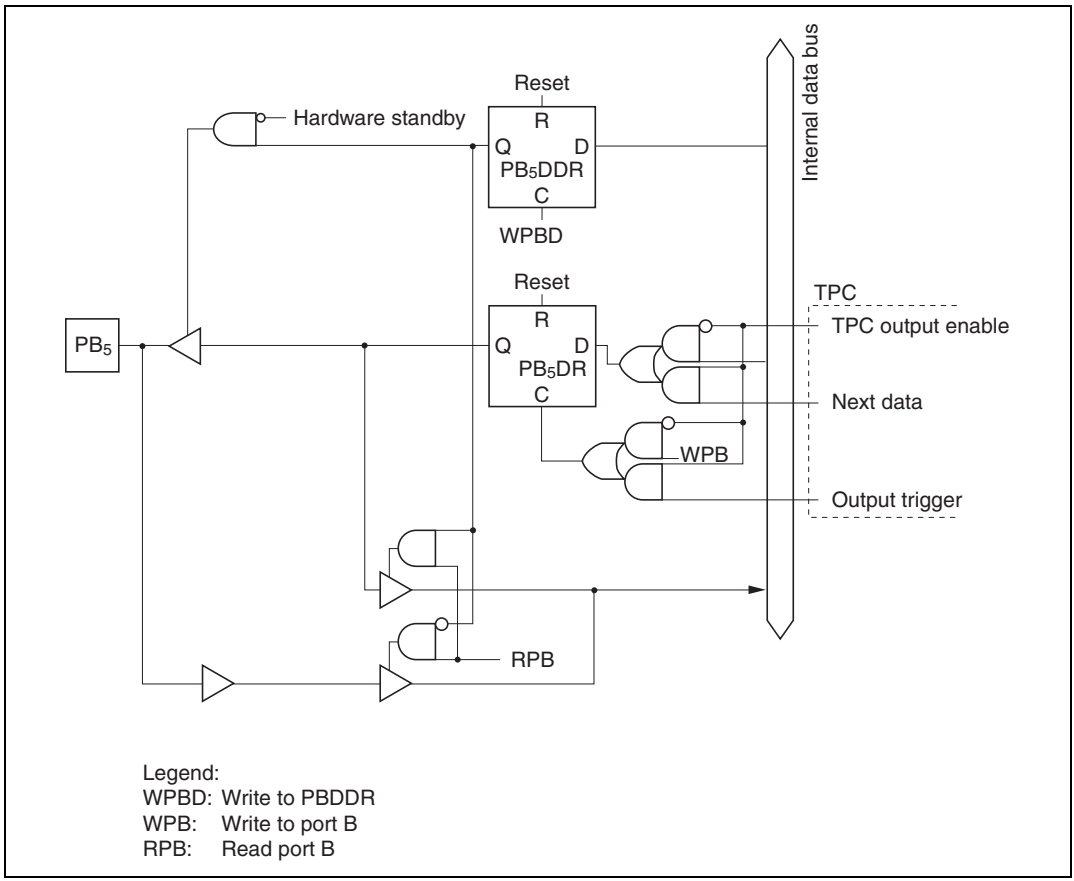

Figure C.7 (d) Port B Block Diagram (Pin PB_5)

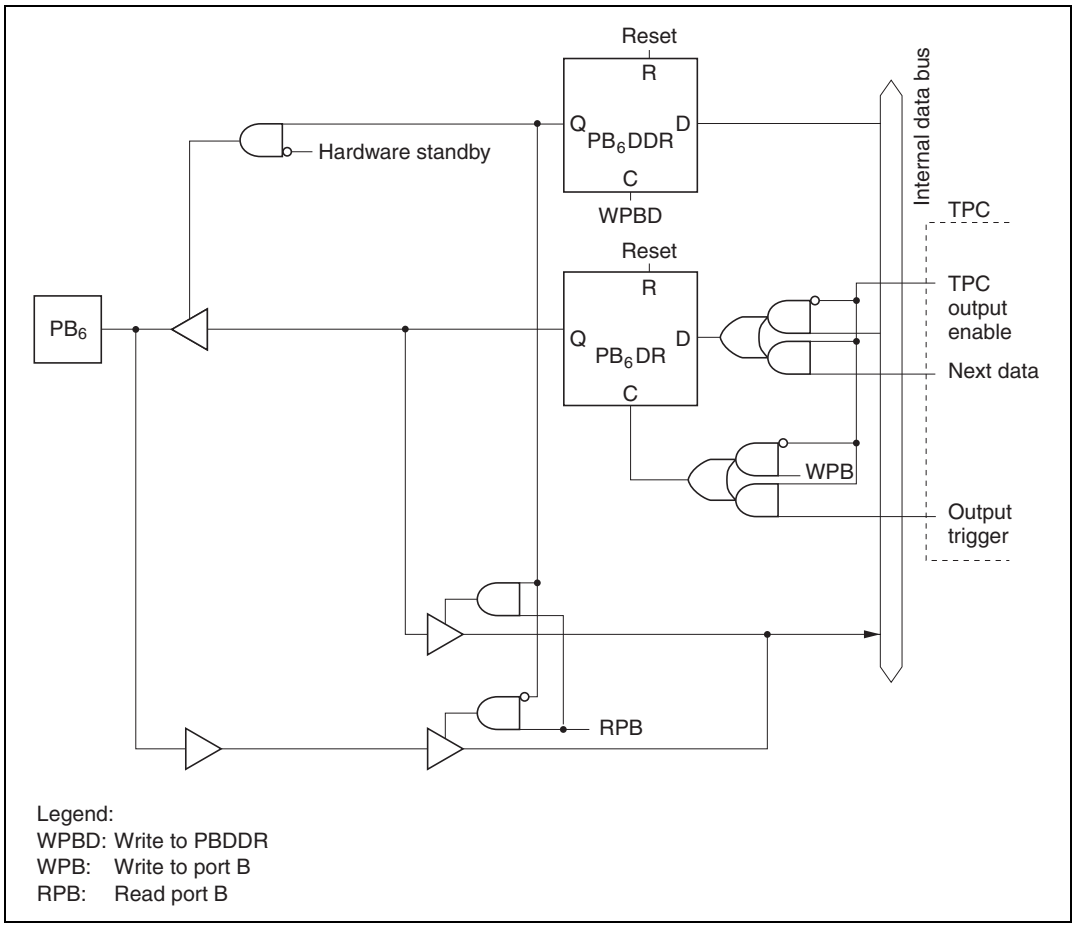

Figure C.7 (e) Port B Block Diagram (Pin PB_6)

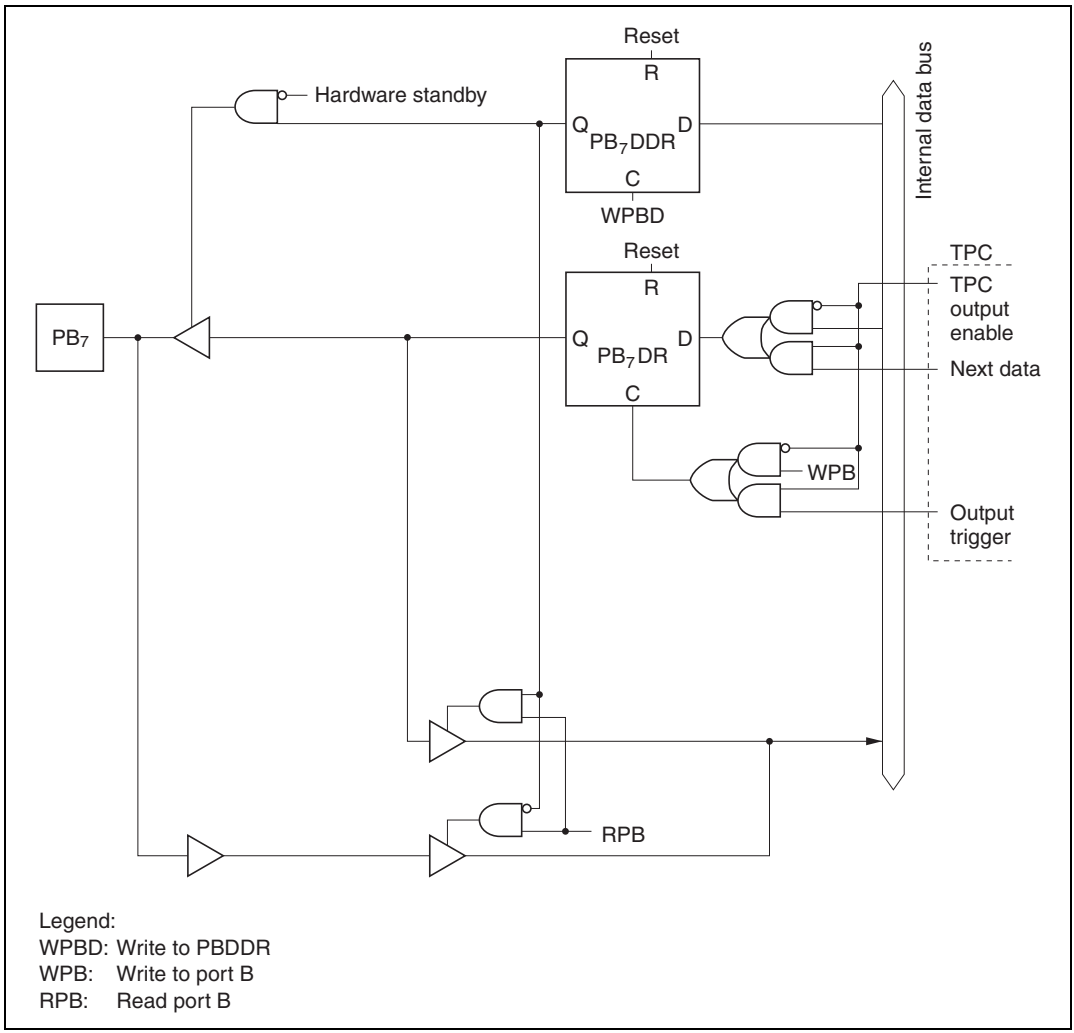

Figure C.7 (f) Port B Block Diagram (Pin PB_7)

Appendix D Pin States

D.1 Port States in Each Mode

Table D.1 Port States

Pin Name	Mode	Reset	Hardware Standby Mode	Software Standby Mode	Bus-Released Mode	Program Execution Mode
A_7 to A_0	—	L	T	(SSOE = 0) T (SSOE = 1) Keep	T	A_7 to A_0
A_{15} to A_8	—	L	T	(SSOE = 0) T (SSOE = 1) Keep	T	A_{15} to A_8
D_{15} to D_8	—	T	T	T	T	D_{15} to D_8
$P4_7$ to $P4_0$	1, 3	T	T	Keep	Keep	I/O port
	2, 4	T	T	T	T	D_7 to D_0
A_{19} to A_{16}	—	L	T	(SSOE = 0) T (SSOE = 1) Keep	T	A_{19} to A_{16}
$P6_0$	—	T	T	Keep	Keep	I/O port $\overline{WAIT}$
$P6_1$	—	T	T	(BRLE = 0) Keep (BRLE = 1) T	T	I/O port $\overline{BREQ}$
$P6_2$	—	T	T	(BRLE = 0) Keep (BRLE = 1) H	L	(BRLE = 0) I/O port (BRLE = 1) $\overline{BACK}$
$\overline{AS}$, $\overline{RD}$, $\overline{HWR}$, $\overline{LWR}$	—	H	T	(SSOE = 0) T (SSOE = 1) H	T	$\overline{AS}$, $\overline{RD}$, $\overline{HWR}$, $\overline{LWR}$
$P6_7$	—	Clock output	T	(PSTOP = 0) H (PSTOP = 1) Keep	(PSTOP = 0) ϕ (PSTOP = 1) Keep	(PSTOP = 0) ϕ (PSTOP = 1) Input port

Pin Name	Mode	Reset	Hardware Standby Mode	Software Standby Mode	Bus-Released Mode	Program Execution Mode
$P7_7$ to $P7_0$	—	T	T	T	T	Input port
$P8_0$	—	T	T	Keep	—	I/O port
$P8_1$	—	T	T	(DDR = 0) T (DDR = 1, SSOE = 0) T (DDR = 1, SSOE = 1) H	(DDR = 0) Keep (DDR = 1) T	(DDR = 0) Input port (DDR = 1) $\overline{CS}_3$
$P8_2$	—	T	T	(DDR = 0) T (DDR = 1, SSOE = 0) T (DDR = 1, SSOE = 1) H	(DDR = 0) Keep (DDR = 1) T	(DDR = 0) Input port (DDR = 1) $\overline{CS}_2$
$P8_3$	—	T	T	(DDR = 0) T (DDR = 1, SSOE = 0) T (DDR = 1, SSOE = 1) H	(DDR = 0) Keep (DDR = 1) T	(DDR = 0) Input port (DDR = 1) $\overline{CS}_1$
$P8_4$	—	H	T	(DDR = 0) T (DDR = 1, SSOE = 0) T (DDR = 1, SSOE = 1) H	(DDR = 0) Keep (DDR = 1) T	(DDR = 0) Input port (DDR = 1) $\overline{CS}_0$
$P9_5$ to $P9_0$	—	T	T	Keep	Keep	I/O port
PA_3 to PA_0	—	T	T	Keep	Keep	I/O port
PA_6 to PA_4	1, 2	T	T	Keep	Keep	I/O port
	3, 4	T	T	(Address output)*1 (SSOE = 0) T (SSOE = 1) Keep (Otherwise)*2 Keep	(Address output)*1 T (Otherwise)*2 Keep	(Address output)*1 A_{23} to A_{21} (Otherwise)*2 I/O port

Pin Name	Mode	Reset	Hardware Standby Mode	Software Standby Mode	Bus-Released Mode	Program Execution Mode
PA_7	1, 2	T	T	Keep	Keep	I/O port
	3, 4	L	T	(SSOE = 0) T (SSOE = 1) Keep	T	A_{20}
PB_3 to PB_0	—	T	T	(CS output)*3 (SSOE = 0) T (SSOE = 1) H (Otherwise)*4 Keep	(CS output)*3 T (Otherwise)*4 Keep	(CS output)*3 $\overline{CS_7}$ to $\overline{CS_4}$ (Otherwise)*4 I/O port
PB_7 to PB_4	—	T	T	Keep	Keep	I/O port

Legend:
H: High
L: Low
T: High-impedance state
keep: Input pins are in the high-impedance state; output pins maintain their previous state.
DDR: Data direction register

Notes:
1. When A23E, A22E, A21E = 0 in BRCR (bus release control register).
2. When A23E, A22E, A21E = 1 in BRCR (bus release control register).
3. When CS7E, CS6E, CS5E, CS4E = 1 in CSCR (chip select control register).
4. When CS7E, CS6E, CS5E, CS4E = 0 in CSCR (chip select control register).

D.2 Pin States at Reset

Modes 1 and 2: Figure D.1 is a timing diagram for the case in which $\overline{RES}$ goes low during an external memory access in mode 1 or 2. As soon as $\overline{RES}$ goes low, all ports are initialized to the input state. $\overline{AS}$, $\overline{RD}$, $\overline{HWR}$, $\overline{LWR}$, and $\overline{CS}_0$ go high, and D_{15} to D_0 go to the high-impedance state. The address bus is initialized to the low output level 2.5 ϕ clock cycles after the low level of $\overline{RES}$ is sampled. Clock pin $P6_7/\phi$ goes to the output state at the next rise of ϕ after $\overline{RES}$ goes low.

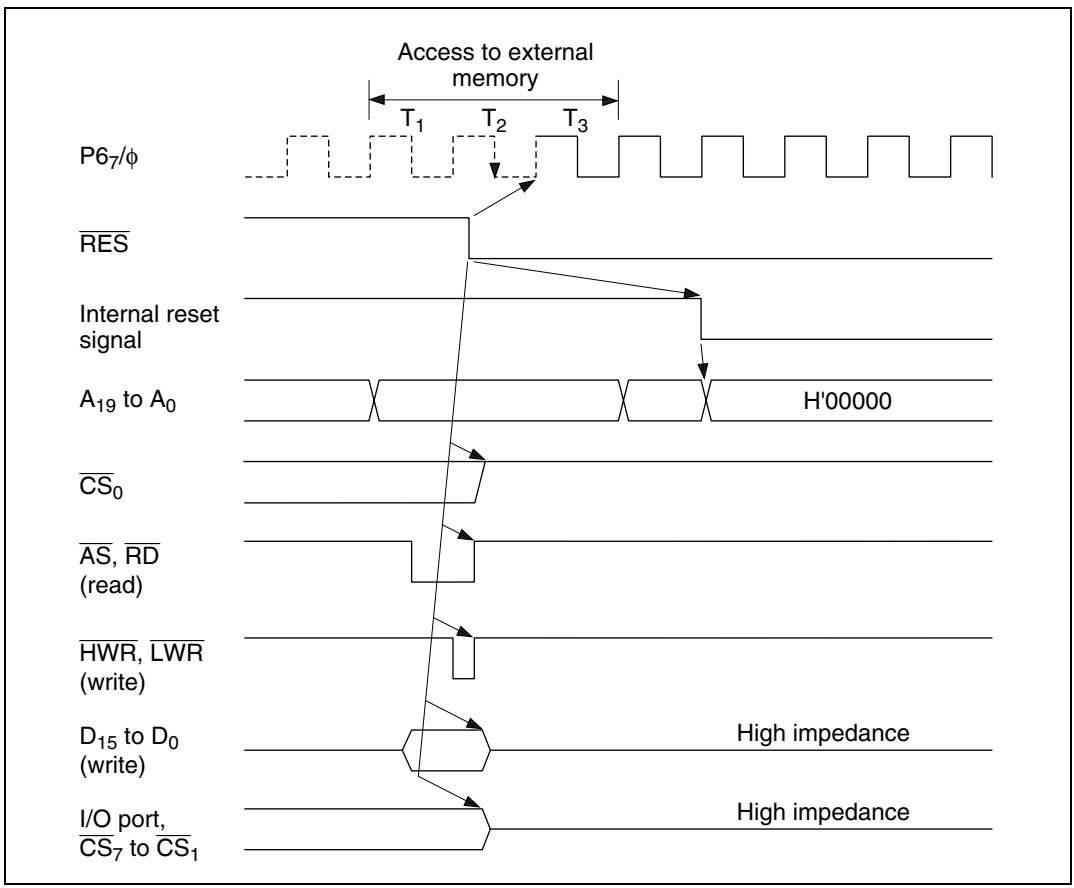

Figure D.1 Reset during Memory Access (Modes 1 and 2)

Modes 3 and 4: Figure D.2 is a timing diagram for the case in which $\overline{RES}$ goes low during an external memory access in mode 3 or 4. As soon as $\overline{RES}$ goes low, all ports are initialized to the input state. $\overline{AS}$, $\overline{RD}$, $\overline{HWR}$, $\overline{LWR}$, and $\overline{CS_0}$ go high, and D_{15} to D_0 go to the high-impedance state. The address bus is initialized to the low output level 2.5 ϕ clock cycles after the low level of $\overline{RES}$ is sampled. However, when PA_4 to PA_6 are used as address bus pins, or when $P8_3$ to $P8_1$ and PB_0 to PB_3 are used as CS output pins, they go to the high-impedance state at the same time as $\overline{RES}$ goes low. Clock pin $P6_7$/ϕ goes to the output state at the next rise of ϕ after $\overline{RES}$ goes low.

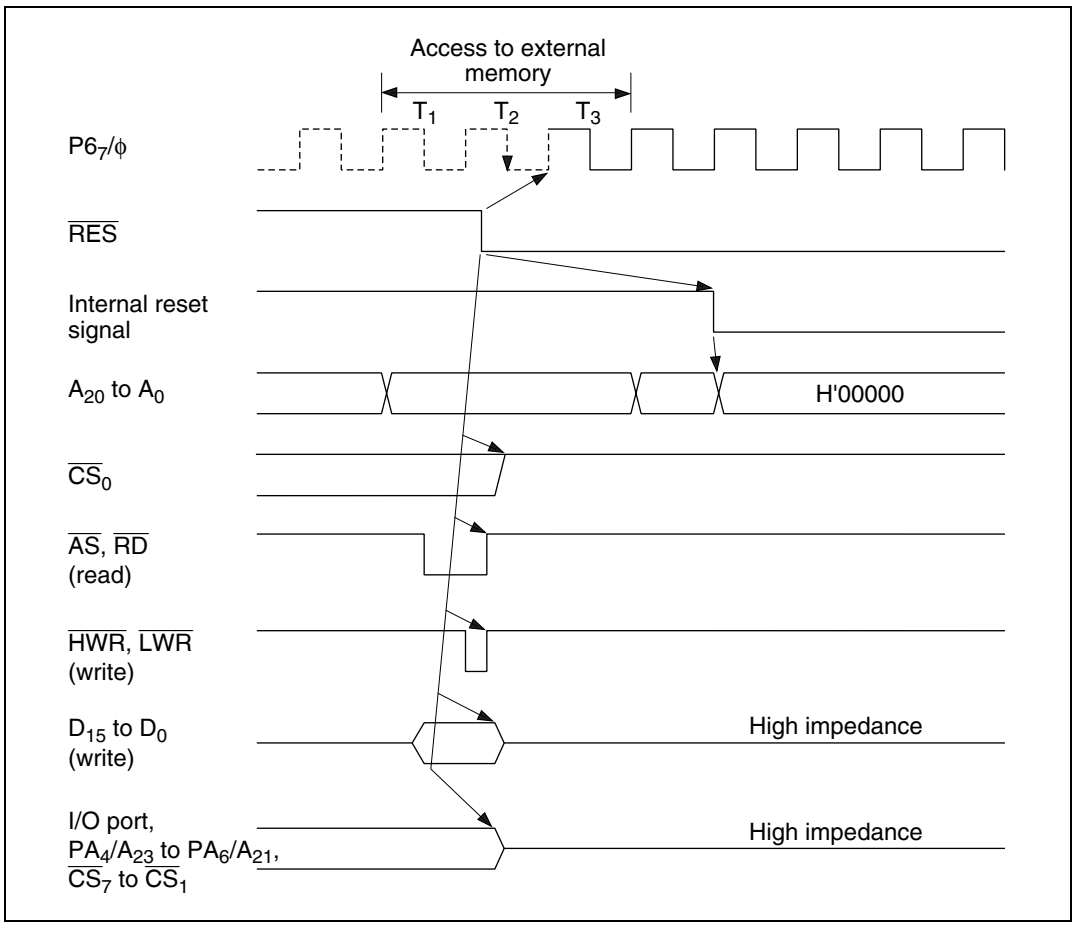

Figure D.2 Reset during Memory Access (Modes 3 and 4)

Appendix E Timing of Transition to and Recovery from Hardware Standby Mode

Timing of Transition to Hardware Standby Mode

1. To retain RAM contents with the RAME bit set to 1 in SYSCR, drive the $\overline{\text{RES}}$ signal low 10 system clock cycles before the $\overline{\text{STBY}}$ signal goes low, as shown below. $\overline{\text{RES}}$ must remain low until $\overline{\text{STBY}}$ goes low (minimum delay from $\overline{\text{STBY}}$ low to $\overline{\text{RES}}$ high: 0 ns).

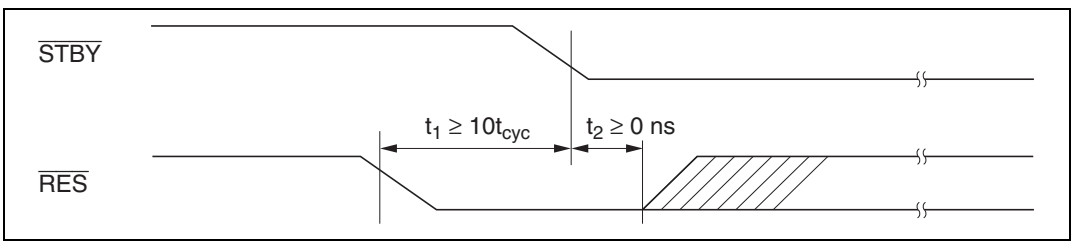

2. To retain RAM contents with the RAME bit cleared to 0 in SYSCR, $\overline{\text{RES}}$ does not have to be driven low as in (1).

Timing of Recovery from Hardware Standby Mode: Drive the $\overline{\text{RES}}$ signal low approximately 100 ns before $\overline{\text{STBY}}$ goes high.

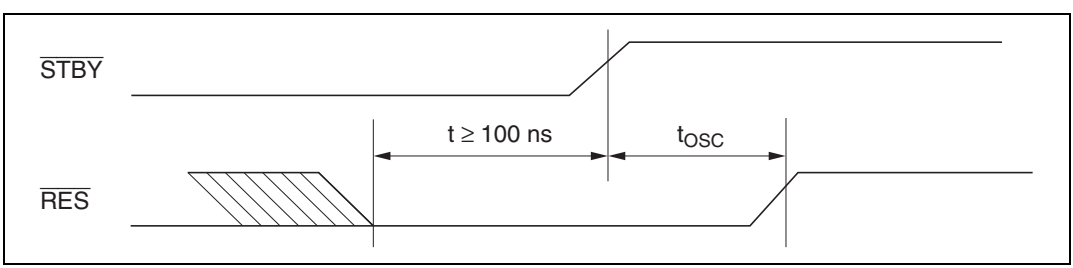

Appendix F Product Code Lineup

Table F.1 H8/3008 Product Code Lineup

Product Type			Product Code	Mark Code	Package (Package Code)
H8/3008	ROMless	5 V	HD6413008F	HD6413008F	100-pin QFP (FP-100B)
			HD6413008TE	HD6413008TE	100-pin TQFP (TFP-100B)
		3 V	HD6413008VF	HD6413008VF	100-pin QFP (FP-100B)
			HD6413008VTE	HD6413008VTE	100-pin TQFP (TFP-100B)

Appendix G Package Dimensions

Figure G.1 shows the FP-100B package dimensions of the H8/3008. Figure G.2 shows the TFP-100B package dimensions.

JEITA Package Code	RENESAS Code	Previous Code	MASS[Typ.]
P-QFP100-14x14-0.50	PRQP0100KA-A	FP-100B/FP-100BV	1.2g

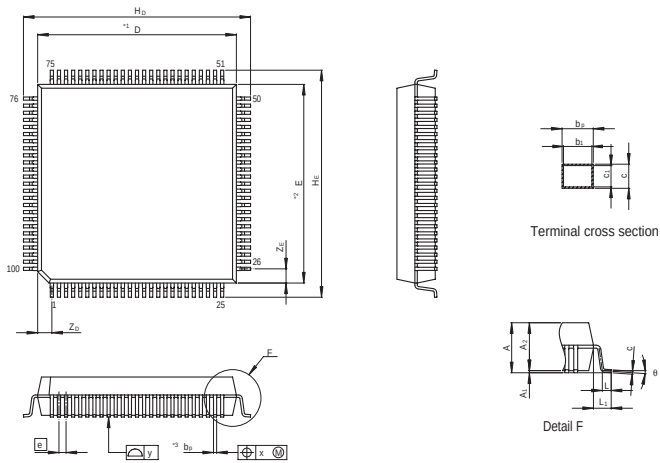

NOTE)
1. DIMENSIONS"*1"AND"*2" DO NOT INCLUDE MOLD FLASH
2. DIMENSION"*3"DOES NOT INCLUDE TRIM OFFSET.

Reference Symbol	Dimension in Millimeters		
	Min	Nom	Max
D	—	14	—
E	—	14	—
A_2	—	2.70	—
H_D	15.7	16.0	16.3
H_E	15.7	16.0	16.3
A	—	—	3.05
A_1	0.00	0.12	0.25
b_p	0.17	0.22	0.27
b_1	—	0.20	—
c	0.12	0.17	0.22
c_1	—	0.15	—
θ	0°	—	8°
e	—	0.5	—
x	—	—	0.08
y	—	—	0.10
Z_D	—	1.0	—
Z_E	—	1.0	—
L	0.3	0.5	0.7
L_1	—	1.0	—

Figure G.1 Package Dimensions (FP-100B)

JEITA Package Code	RENESAS Code	Previous Code	MASS[Typ.]
P-TQFP100-14x14-0.50	PTQP0100KA-A	TFP-100B/TFP-100BV	0.5g

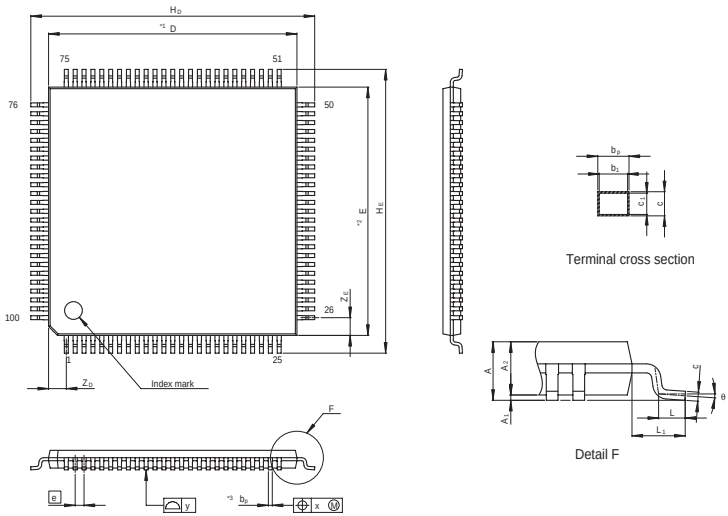

Terminal cross section

Detail F

NOTE)
1. DIMENSIONS"*1"AND"*2" DO NOT INCLUDE MOLD FLASH
2. DIMENSION"*3"DOES NOT INCLUDE TRIM OFFSET.

Reference Symbol	Dimension in Millimeters		
	Min	Nom	Max
D	—	14	—
E	—	14	—
A_2	—	1.00	—
H_D	15.8	16.0	16.2
H_E	15.8	16.0	16.2
A	—	—	1.20
A_1	0.00	0.10	0.20
b_p	0.17	0.22	0.27
b_1	—	0.20	—
c	0.12	0.17	0.22
c_1	—	0.15	—
θ	0°	—	8°
e	—	0.5	—
x	—	—	0.08
y	—	—	0.10
Z_D	—	1.00	—
Z_E	—	1.00	—
L	0.4	0.5	0.6
L_1	—	1.0	—

Figure G.2 Package Dimensions (TFP-100B)

Appendix H Comparison of H8/300H Series Product Specifications

H.1 Differences between H8/3067 and H8/3062 Group, H8/3048 Group, H8/3006 and H8/3007, and H8/3008

	Item		H8/3067 Group, H8/3062 Group	H8/3048 Group	H8/3006, H8/3007	H8/3008
1	Operating mode	Mode 5	16 Mbyte ROM enabled expanded mode	1 Mbyte ROM enabled expanded mode		
		Mode 6	64 kbyte single-chip mode	16 Mbyte ROM enabled expanded mode		
2	Interrupt controller	Internal interrupt sources	36 (H8/3067) 27 (H8/3062 Group)	30	36	27
3	Bus controller	Burst ROM interface	Yes (H8/3067) No (H8/3062 Group)	No	Yes	No
		Idle cycle insertion function	Yes	No	Yes	Yes
		Wait mode	2 modes	4 modes	2 modes	2 modes
		Wait state number setting	Per area	Common to all areas	Per area	Per area
		Address output method	Choice of address update mode (fixed in H8/3067F-ZTAT and H8/3062F-ZTAT)	Fixed	Fixed	Choice of address update mode
4	DRAM interface	Connectable areas	Area 2/3/4/5 (H8/3067 only)	Area 3	Area 2/3/4/5	No
		Precharge cycle insertion function	Yes (H8/3067 only)	No	Yes	No
		Fast page mode	Yes (H8/3067 only)	No	Yes	No
		Address shift amount	8 bit/9 bit/10 bit (H8/3067 only)	8 bit/9 bit	8 bit/9 bit/10 bit	No

	Item		H8/3067 Group, H8/3062 Group		H8/3048 Group	H8/3006, H8/3007		H8/3008	
5	Timer functions		16-bit timers	8-bit timers	ITU	16-bit timers	8-bit timers	16-bit timers	8-bit timers
		Number of channels	16 bits × 3	8 bits × 4 (16 bits × 2)	16 bits × 5	16 bits × 3	8 bits × 4 (16 bits × 2)	16 bits × 3	8 bits × 4 (16 bits × 2)
		Pulse output	6 pins	4 pins (2 pins)	12 pins	6 pins	4 pins (2 pins)	6 pins	4 pins (2 pins)
		Input capture	6	2	10	6	2	6	2
		External clock	4 systems (selec-table)	4 systems (fixed)	4 systems (selec-table)	4 systems (selec-table)	4 systems (fixed)	4 systems (selec-table)	4 systems (fixed)
		Internal clock	ϕ, ϕ/2, ϕ/4, ϕ/8	ϕ/8, ϕ/64, ϕ/8192	ϕ, ϕ/2, ϕ/4, ϕ/8	ϕ, ϕ/2, ϕ/4, ϕ/8	ϕ/8, ϕ/64, ϕ/8192	ϕ, ϕ/2, ϕ/4, ϕ/8	ϕ/8, ϕ/64, ϕ/8192
		Comple-mentary PWM function	No	No	Yes	No	No	No	No
		Reset-synchronous PWM function	No	No	Yes	No	No	No	No
		Buffer operation	No	No	Yes	No	No	No	No
		Output initialization function	Yes	No	No	Yes	No	Yes	No
		PWM output	3	4 (2)	5	3	4 (2)	3	4 (2)
		DMAC activation	3 channels (H8/3067 only)	No	4 channels	3 channels	No	No	
		A/D conversion activation	No	Yes	No	No	Yes	Yes	
		Interrupt sources	3 sources × 3	8 sources	3 sources × 5	3 sources × 3	8 sources	8 sources	
6	TPC	Time base	3 kinds, 16-bit timer base		4 kinds, ITU base	3 kinds, 16-bit timer base		3 kinds, 16-bit timer base	
7	WDT	Reset signal external output function	Yes (except products with on-chip flash memory)		Yes	Yes		Yes	

	Item		H8/3067 Group, H8/3062 Group	H8/3048 Group	H8/3006, H8/3007	H8/3008
8	SCI	Number of channels	3 channels (H8/3067) 2 channels (H8/3062 Group)	2 channels	3 channels	2 channels
		Smart card interface	Supported on all channels	Supported on SCI0 only	Supported on all channels	Supported on all channels
9	A/D converter	Conversion start trigger input	External trigger/8-bit timer compare match	External trigger	External trigger/8-bit timer compare match	External trigger/8-bit timer compare match
		Conversion states	70/134	134/266	70/134	70/134
10	Pin control	ϕ pin	ϕ/input port multiplexing	ϕ output only	ϕ/input port multiplexing	ϕ output/input port
		A_{20} in 16 MB ROM enabled expanded mode	A_{20} / I/O port multiplexing	A_{20} output		
		Address bus, $\overline{AS}$, $\overline{RD}$, $\overline{HWR}$, $\overline{LWR}$, $\overline{CS_7}$–$\overline{CS_0}$, $\overline{RFSH}$ in software standby state	High-level output/high-impedance selectable ($\overline{RFSH}$: H8/3067 only)	High-level output (except $\overline{CS_0}$) Low-level output ($\overline{CS_0}$)	High-level output/high-impedance selectable	High-level output/high-impedance selectable
		$\overline{CS_7}$–$\overline{CS_0}$ in bus-released state	High-impedance	High-level output	High-impedance	High-impedance
11	Flash memory functions	Program/erase voltage	12 V application unnecessary. Single-power-supply programming.	12 V application from off-chip		
		Block divisions	8 blocks (12 blocks in H8/3064F-ZTAT B-mask version)	16 blocks		

H.2 Comparison of Pin Functions of 100-Pin Package Products (FP-100B, TFP-100B)

Table H.1 Pin Arrangement of Each Product (FP-100B, TFP-100B)

	On-chip-ROM Products				ROMless Products	
Pin No.	H8/3067 Group	H8/3062 Group	H8/3048 Group	H8/3042 Group	H8/3006, H8/3007	H8/3008
1	V_{CC}	V_{CC}/V_{CL}*2	V_{CC}	V_{CC}	V_{CC}	V_{CC}/V_{CL}*2
2	$PB_0/TP_8/TMO_0/\overline{CS_7}$	$PB_0/TP_8/TMO_0/\overline{CS_7}$	$PB_0/TP_8/TIOCA_3$	$PB_0/TP_8/TIOCA_3$	$PB_0/TP_8/TMO_0/\overline{CS_7}$	$PB_0/TP_8/TMO_0/\overline{CS_7}$
3	$PB_1/TP_9/TMIO_1/\overline{DREQ_0}/\overline{CS_6}$	$PB_1/TP_9/TMIO_1/\overline{CS_6}$	$PB_1/TP_9/TIOCB_3$	$PB_1/TP_9/TIOCB_3$	$PB_1/TP_9/TMIO_1/\overline{DREQ_0}/\overline{CS_6}$	$PB_1/TP_9/TMIO_1/\overline{CS_6}$
4	$PB_2/TP_{10}/TMO_2/\overline{CS_5}$	$PB_2/TP_{10}/TMO_2/\overline{CS_5}$	$PB_2/TP_{10}/TIOCA_4$	$PB_2/TP_{10}/TIOCA_4$	$PB_2/TP_{10}/TMO_2/\overline{CS_5}$	$PB_2/TP_{10}/TMO_2/\overline{CS_5}$
5	$PB_3/TP_{11}/TMIO_3/\overline{DREQ_1}/\overline{CS_4}$	$PB_3/TP_{11}/TMIO_3/\overline{CS_4}$	$PB_3/TP_{11}/TIOCB_4$	$PB_3/TP_{11}/TIOCB_4$	$PB_3/TP_{11}/TMIO_3/\overline{DREQ_1}/\overline{CS_4}$	$PB_3/TP_{11}/TMIO_3/\overline{CS_4}$
6	$PB_4/TP_{12}/\overline{UCAS}$	PB_4/TP_{12}	$PB_4/TP_{12}/TOCXA_4$	$PB_4/TP_{12}/TOCXA_4$	$PB_4/TP_{12}/\overline{UCAS}$	PB_4/TP_{12}
7	$PB_5/TP_{13}/\overline{LCAS}/SCK_2$	PB_5/TP_{13}	$PB_5/TP_{13}/TOCXB_4$	$PB_5/TP_{13}/TOCXB_4$	$PB_5/TP_{13}/\overline{LCAS}/SCK_2$	PB_5/TP_{13}
8	$PB_6/TP_{14}/TxD_2$	PB_6/TP_{14}	$PB_6/TP_{14}/\overline{DREQ_0}/\overline{CS_7}$	$PB_6/TP_{14}/\overline{DREQ_0}$	$PB_6/TP_{14}/TxD_2$	PB_6/TP_{14}
9	$PB_7/TP_{15}/RxD_2$	PB_7/TP_{15}	$PB_7/TP_{15}/\overline{DREQ_1}/\overline{ADTRG}$	$PB_7/TP_{15}/\overline{DREQ_1}/\overline{ADTRG}$	$PB_7/TP_{15}/RxD_2$	PB_7/TP_{15}
10	$\overline{RESO}/FWE$*1	$\overline{RESO}/FWE$*1	$\overline{RESO}/V_{PP}$	$\overline{RESO}$	$\overline{RESO}$	$NC/\overline{RESO}$
11	Vss	Vss	Vss	Vss	Vss	Vss
12	$P9_0/TxD_0$	$P9_0/TxD_0$	$P9_0/TxD_0$	$P9_0/TxD_0$	$P9_0/TxD_0$	$P9_0/TxD_0$
13	$P9_1/TxD_1$	$P9_1/TxD_1$	$P9_1/TxD_1$	$P9_1/TxD_1$	$P9_1/TxD_1$	$P9_1/TxD_1$
14	$P9_2/RxD_0$	$P9_2/RxD_0$	$P9_2/RxD_0$	$P9_2/RxD_0$	$P9_2/RxD_0$	$P9_2/RxD_0$
15	$P9_3/RxD_1$	$P9_3/RxD_1$	$P9_3/RxD_1$	$P9_3/RxD_1$	$P9_3/RxD_1$	$P9_3/RxD_1$
16	$P9_4/SCK_0/\overline{IRQ_4}$	$P9_4/SCK_0/\overline{IRQ_4}$	$P9_4/SCK_0/\overline{IRQ_4}$	$P9_4/SCK_0/\overline{IRQ_4}$	$P9_4/SCK_0/\overline{IRQ_4}$	$P9_4/SCK_0/\overline{IRQ_4}$
17	$P9_5/SCK_1/\overline{IRQ_5}$	$P9_5/SCK_1/\overline{IRQ_5}$	$P9_5/SCK_1/\overline{IRQ_5}$	$P9_5/SCK_1/\overline{IRQ_5}$	$P9_5/SCK_1/\overline{IRQ_5}$	$P9_5/SCK_1/\overline{IRQ_5}$
18	$P4_0/D_0$	$P4_0/D_0$	$P4_0/D_0$	$P4_0/D_0$	$P4_0/D_0$	$P4_0/D_0$
19	$P4_1/D_1$	$P4_1/D_1$	$P4_1/D_1$	$P4_1/D_1$	$P4_1/D_1$	$P4_1/D_1$
20	$P4_2/D_2$	$P4_2/D_2$	$P4_2/D_2$	$P4_2/D_2$	$P4_2/D_2$	$P4_2/D_2$
21	$P4_3/D_3$	$P4_3/D_3$	$P4_3/D_3$	$P4_3/D_3$	$P4_3/D_3$	$P4_3/D_3$
22	Vss	Vss	Vss	Vss	Vss	Vss
23	$P4_4/D_4$	$P4_4/D_4$	$P4_4/D_4$	$P4_4/D_4$	$P4_4/D_4$	$P4_4/D_4$

Pin No.	On-chip-ROM Products				ROMless Products	
	H8/3067 Group	H8/3062 Group	H8/3048 Group	H8/3042 Group	H8/3006, H8/3007	H8/3008
24	$P4_5/D_5$	$P4_5/D_5$	$P4_5/D_5$	$P4_5/D_5$	$P4_5/D_5$	$P4_5/D_5$
25	$P4_6/D_6$	$P4_6/D_6$	$P4_6/D_6$	$P4_6/D_6$	$P4_6/D_6$	$P4_6/D_6$
26	$P4_7/D_7$	$P4_7/D_7$	$P4_7/D_7$	$P4_7/D_7$	$P4_7/D_7$	$P4_7/D_7$
27	$P3_0/D_8$	$P3_0/D_8$	$P3_0/D_8$	$P3_0/D_8$	D_8	D_8
28	$P3_1/D_9$	$P3_1/D_9$	$P3_1/D_9$	$P3_1/D_9$	D_9	D_9
29	$P3_2/D_{10}$	$P3_2/D_{10}$	$P3_2/D_{10}$	$P3_2/D_{10}$	D_{10}	D_{10}
30	$P3_3/D_{11}$	$P3_3/D_{11}$	$P3_3/D_{11}$	$P3_3/D_{11}$	D_{11}	D_{11}
31	$P3_4/D_{12}$	$P3_4/D_{12}$	$P3_4/D_{12}$	$P3_4/D_{12}$	D_{12}	D_{12}
32	$P3_5/D_{13}$	$P3_5/D_{13}$	$P3_5/D_{13}$	$P3_5/D_{13}$	D_{13}	D_{13}
33	$P3_6/D_{14}$	$P3_6/D_{14}$	$P3_6/D_{14}$	$P3_6/D_{14}$	D_{14}	D_{14}
34	$P3_7/D_{15}$	$P3_7/D_{15}$	$P3_7/D_{15}$	$P3_7/D_{15}$	D_{15}	D_{15}
35	Vcc	Vcc	Vcc	Vcc	Vcc	Vcc
36	$P1_0/A_0$	$P1_0/A_0$	$P1_0/A_0$	$P1_0/A_0$	A_0	A_0
37	$P1_1/A_1$	$P1_1/A_1$	$P1_1/A_1$	$P1_1/A_1$	A_1	A_1
38	$P1_2/A_2$	$P1_2/A_2$	$P1_2/A_2$	$P1_2/A_2$	A_2	A_2
39	$P1_3/A_3$	$P1_3/A_3$	$P1_3/A_3$	$P1_3/A_3$	A_3	A_3
40	$P1_4/A_4$	$P1_4/A_4$	$P1_4/A_4$	$P1_4/A_4$	A_4	A_4
41	$P1_5/A_5$	$P1_5/A_5$	$P1_5/A_5$	$P1_5/A_5$	A_5	A_5
42	$P1_6/A_6$	$P1_6/A_6$	$P1_6/A_6$	$P1_6/A_6$	A_6	A_6
43	$P1_7/A_7$	$P1_7/A_7$	$P1_7/A_7$	$P1_7/A_7$	A_7	A_7
44	Vss	Vss	Vss	Vss	Vss	Vss
45	$P2_0/A_8$	$P2_0/A_8$	$P2_0/A_8$	$P2_0/A_8$	A_8	A_8
46	$P2_1/A_9$	$P2_1/A_9$	$P2_1/A_9$	$P2_1/A_9$	A_9	A_9
47	$P2_2/A_{10}$	$P2_2/A_{10}$	$P2_2/A_{10}$	$P2_2/A_{10}$	A_{10}	A_{10}
48	$P2_3/A_{11}$	$P2_3/A_{11}$	$P2_3/A_{11}$	$P2_3/A_{11}$	A_{11}	A_{11}
49	$P2_4/A_{12}$	$P2_4/A_{12}$	$P2_4/A_{12}$	$P2_4/A_{12}$	A_{12}	A_{12}
50	$P2_5/A_{13}$	$P2_5/A_{13}$	$P2_5/A_{13}$	$P2_5/A_{13}$	A_{13}	A_{13}
51	$P2_6/A_{14}$	$P2_6/A_{14}$	$P2_6/A_{14}$	$P2_6/A_{14}$	A_{14}	A_{14}
52	$P2_7/A_{15}$	$P2_7/A_{15}$	$P2_7/A_{15}$	$P2_7/A_{15}$	A_{15}	A_{15}
53	$P5_0/A_{16}$	$P5_0/A_{16}$	$P5_0/A_{16}$	$P5_0/A_{16}$	A_{16}	A_{16}
54	$P5_1/A_{17}$	$P5_1/A_{17}$	$P5_1/A_{17}$	$P5_1/A_{17}$	A_{17}	A_{17}
55	$P5_2/A_{18}$	$P5_2/A_{18}$	$P5_2/A_{18}$	$P5_2/A_{18}$	A_{18}	A_{18}
56	$P5_3/A_{19}$	$P5_3/A_{19}$	$P5_3/A_{19}$	$P5_3/A_{19}$	A_{19}	A_{19}

Pin No.	On-chip-ROM Products				ROMless Products	
	H8/3067 Group	H8/3062 Group	H8/3048 Group	H8/3042 Group	H8/3006, H8/3007	H8/3008
57	Vss	Vss	Vss	Vss	Vss	Vss
58	$P6_0/\overline{WAIT}$	$P6_0/\overline{WAIT}$	$P6_0/\overline{WAIT}$	$P6_0/\overline{WAIT}$	$P6_0/\overline{WAIT}$	$P6_0/\overline{WAIT}$
59	$P6_1/\overline{BREQ}$	$P6_1/\overline{BREQ}$	$P6_1/\overline{BREQ}$	$P6_1/\overline{BREQ}$	$P6_1/\overline{BREQ}$	$P6_1/\overline{BREQ}$
60	$P6_2/\overline{BACK}$	$P6_2/\overline{BACK}$	$P6_2/\overline{BACK}$	$P6_2/\overline{BACK}$	$P6_2/\overline{BACK}$	$P6_2/\overline{BACK}$
61	$P6_7/\phi$	$P6_7/\phi$	ϕ	ϕ	$P6_7/\phi$	$P6_7/\phi$
62	$\overline{STBY}$	$\overline{STBY}$	$\overline{STBY}$	$\overline{STBY}$	$\overline{STBY}$	$\overline{STBY}$
63	$\overline{RES}$	$\overline{RES}$	$\overline{RES}$	$\overline{RES}$	$\overline{RES}$	$\overline{RES}$
64	NMI	NMI	NMI	NMI	NMI	NMI
65	Vss	Vss	Vss	Vss	Vss	Vss
66	EXTAL	EXTAL	EXTAL	EXTAL	EXTAL	EXTAL
67	XTAL	XTAL	XTAL	XTAL	XTAL	XTAL
68	Vcc	Vcc	Vcc	Vcc	Vcc	Vcc
69	$P6_3/\overline{AS}$	$P6_3/\overline{AS}$	$P6_3/\overline{AS}$	$P6_3/\overline{AS}$	$\overline{AS}$	$\overline{AS}$
70	$P6_4/\overline{RD}$	$P6_4/\overline{RD}$	$P6_4/\overline{RD}$	$P6_4/\overline{RD}$	$\overline{RD}$	$\overline{RD}$
71	$P6_5/\overline{HWR}$	$P6_5/\overline{HWR}$	$P6_5/\overline{HWR}$	$P6_5/\overline{HWR}$	$\overline{HWR}$	$\overline{HWR}$
72	$P6_6/\overline{LWR}$	$P6_6/\overline{LWR}$	$P6_6/\overline{LWR}$	$P6_6/\overline{LWR}$	$\overline{LWR}$	$\overline{LWR}$
73	MD_0	MD_0	MD_0	MD_0	MD_0	MD_0
74	MD_1	MD_1	MD_1	MD_1	MD_1	MD_1
75	MD_2	MD_2	MD_2	MD_2	MD_2	MD_2
76	AVcc	AVcc	AVcc	AVcc	AVcc	AVcc
77	V_{REF}	V_{REF}	V_{REF}	V_{REF}	V_{REF}	V_{REF}
78	$P7_0/AN_0$	$P7_0/AN_0$	$P7_0/AN_0$	$P7_0/AN_0$	$P7_0/AN_0$	$P7_0/AN_0$
79	$P7_1/AN_1$	$P7_1/AN_1$	$P7_1/AN_1$	$P7_1/AN_1$	$P7_1/AN_1$	$P7_1/AN_1$
80	$P7_2/AN_2$	$P7_2/AN_2$	$P7_2/AN_2$	$P7_2/AN_2$	$P7_2/AN_2$	$P7_2/AN_2$
81	$P7_3/AN_3$	$P7_3/AN_3$	$P7_3/AN_3$	$P7_3/AN_3$	$P7_3/AN_3$	$P7_3/AN_3$
82	$P7_4/AN_4$	$P7_4/AN_4$	$P7_4/AN_4$	$P7_4/AN_4$	$P7_4/AN_4$	$P7_4/AN_4$
83	$P7_5/AN_5$	$P7_5/AN_5$	$P7_5/AN_5$	$P7_5/AN_5$	$P7_5/AN_5$	$P7_5/AN_5$
84	$P7_6/AN_6/DA_0$	$P7_6/AN_6/DA_0$	$P7_6/AN_6/DA_0$	$P7_6/AN_6/DA_0$	$P7_6/AN_6/DA_0$	$P7_6/AN_6/DA_0$
85	$P7_7/AN_7/DA_1$	$P7_7/AN_7/DA_1$	$P7_7/AN_7/DA_1$	$P7_7/AN_7/DA_1$	$P7_7/AN_7/DA_1$	$P7_7/AN_7/DA_1$
86	AVss	AVss	AVss	AVss	AVss	AVss
87	$P8_0/\overline{RFSH}/\overline{IRQ_0}$	$P8_0/\overline{IRQ_0}$	$P8_0/\overline{RFSH}/\overline{IRQ_0}$	$P8_0/\overline{RFSH}/\overline{IRQ_0}$	$P8_0/\overline{RFSH}/\overline{IRQ_0}$	$P8_0/\overline{IRQ_0}$
88	$P8_1/\overline{CS_3}/\overline{IRQ_1}$	$P8_1/\overline{CS_3}/\overline{IRQ_1}$	$P8_1/\overline{CS_3}/\overline{IRQ_1}$	$P8_1/\overline{CS_3}/\overline{IRQ_1}$	$P8_1/\overline{CS_3}/\overline{IRQ_1}$	$P8_1/\overline{CS_3}/\overline{IRQ_1}$
89	$P8_2/\overline{CS_2}/\overline{IRQ_2}$	$P8_2/\overline{CS_2}/\overline{IRQ_2}$	$P8_2/\overline{CS_2}/\overline{IRQ_2}$	$P8_2/\overline{CS_2}/\overline{IRQ_2}$	$P8_2/\overline{CS_2}/\overline{IRQ_2}$	$P8_2/\overline{CS_2}/\overline{IRQ_2}$

Pin No.	On-chip-ROM Products				ROMless Products	
	H8/3067 Group	H8/3062 Group	H8/3048 Group	H8/3042 Group	H8/3006, H8/3007	H8/3008
90	$P8_3/\overline{CS_1}/\overline{IRQ_3}/\overline{ADTRG}$	$P8_3/\overline{CS_1}/\overline{IRQ_3}/\overline{ADTRG}$	$P8_3/\overline{CS_1}/\overline{IRQ_3}$	$P8_3/\overline{CS_1}/\overline{IRQ_3}$	$P8_3/\overline{CS_1}/\overline{IRQ_3}/\overline{ADTRG}$	$P8_3/\overline{CS_1}/\overline{IRQ_3}/\overline{ADTRG}$
91	$P8_4/\overline{CS_0}$	$P8_4/\overline{CS_0}$	$P8_4/\overline{CS_0}$	$P8_4/\overline{CS_0}$	$P8_4/\overline{CS_0}$	$P8_4/\overline{CS_0}$
92	Vss	Vss	Vss	Vss	Vss	Vss
93	$PA_0/TP_0/\overline{TEND_0}$/TCLKA	PA_0/TP_0/TCLKA	$PA_0/TP_0/\overline{TEND_0}$/TCLKA	$PA_0/TP_0/\overline{TEND_0}$/TCLKA	$PA_0/TP_0/\overline{TEND_0}$/TCLKA	PA_0/TP_0/TCLKA
94	$PA_1/TP_1/\overline{TEND_1}$/TCLKB	PA_1/TP_1/TCLKB	$PA_1/TP_1/\overline{TEND_1}$/TCLKB	$PA_1/TP_1/\overline{TEND_1}$/TCLKB	$PA_1/TP_1/\overline{TEND_1}$/TCLKB	PA_1/TP_1/TCLKB
95	PA_2/TP_2/TIOCA$_0$/TCLKC	PA_2/TP_2/TIOCA$_0$/TCLKC	PA_2/TP_2/TIOCA$_0$/TCLKC	PA_2/TP_2/TIOCA$_0$/TCLKC	PA_2/TP_2/TIOCA$_0$/TCLKC	PA_2/TP_2/TIOCA$_0$/TCLKC
96	PA_3/TP_3/TIOCB$_0$/TCLKD	PA_3/TP_3/TIOCB$_0$/TCLKD	PA_3/TP_3/TIOCB$_0$/TCLKD	PA_3/TP_3/TIOCB$_0$/TCLKD	PA_3/TP_3/TIOCB$_0$/TCLKD	PA_3/TP_3/TIOCB$_0$/TCLKD
97	PA_4/TP_4/TIOCA$_1$/A$_{23}$	PA_4/TP_4/TIOCA$_1$/A$_{23}$	$PA_4/TP_4/\overline{CS_6}$/TIOCA$_1$/A$_{23}$	PA_4/TP_4/TIOCA$_1$/A$_{23}$	PA_4/TP_4/TIOCA$_1$/A$_{23}$	PA_4/TP_4/TIOCA$_1$/A$_{23}$
98	PA_5/TP_5/TIOCB$_1$/A$_{22}$	PA_5/TP_5/TIOCB$_1$/A$_{22}$	$PA_5/TP_5/\overline{CS_5}$/TIOCB$_1$/A$_{22}$	PA_5/TP_5/TIOCB$_1$/A$_{22}$	PA_5/TP_5/TIOCB$_1$/A$_{22}$	PA_5/TP_5/TIOCB$_1$/A$_{22}$
99	PA_6/TP_6/TIOCA$_2$/A$_{21}$	PA_6/TP_6/TIOCA$_2$/A$_{21}$	$PA_6/TP_6/\overline{CS_4}$/TIOCA$_2$/A$_{21}$	PA_6/TP_6/TIOCA$_2$/A$_{21}$	PA_6/TP_6/TIOCA$_2$/A$_{21}$	PA_6/TP_6/TIOCA$_2$/A$_{21}$
100	PA_7/TP_7/TIOCB$_2$/A$_{20}$	PA_7/TP_7/TIOCB$_2$/A$_{20}$	PA_7/TP_7/TIOCB$_2$/A$_{20}$	PA_7/TP_7/TIOCB$_2$/A$_{20}$	PA_7/TP_7/TIOCB$_2$/A$_{20}$	PA_7/TP_7/TIOCB$_2$/A$_{20}$

Notes: 1. Functions as $\overline{RESO}$ in the mask ROM versions, and as FWE in the on-chip flash memory versions.

2. The 5 V operation models of the H8/3064F-ZTAT B-mask version and the H8/3062F-ZTAT B-mask version have a V_{CL} pin, and require an external capacitor (0.1 μF).

Renesas 16-Bit Single-chip Microcomputer
Hardware Manual
H8/3008

Publication Date: 1st Edition, September 2000
Rev.4.00, August 20, 2007
Published by: Sales Strategic Planning Div.
Renesas Technology Corp.
Edited by: Customer Support Department
Global Strategic Communication Div.
Renesas Solutions Corp.

© 2007. Renesas Technology Corp., All rights reserved. Printed in Japan.

Renesas Technology Corp. Sales Strategic Planning Div. Nippon Bldg., 2-6-2, Ohte-machi, Chiyoda-ku, Tokyo 100-0004, Japan

RENESAS SALES OFFICES

http://www.renesas.com

Refer to "**http://www.renesas.com/en/network**" for the latest and detailed information.

Renesas Technology America, Inc.
450 Holger Way, San Jose, CA 95134-1368, U.S.A
Tel: <1> (408) 382-7500, Fax: <1> (408) 382-7501

Renesas Technology Europe Limited
Dukes Meadow, Millboard Road, Bourne End, Buckinghamshire, SL8 5FH, U.K.
Tel: <44> (1628) 585-100, Fax: <44> (1628) 585-900

Renesas Technology (Shanghai) Co., Ltd.
Unit 204, 205, AZIACenter, No.1233 Lujiazui Ring Rd, Pudong District, Shanghai, China 200120
Tel: <86> (21) 5877-1818, Fax: <86> (21) 6887-7898

Renesas Technology Hong Kong Ltd.
7th Floor, North Tower, World Finance Centre, Harbour City, 1 Canton Road, Tsimshatsui, Kowloon, Hong Kong
Tel: <852> 2265-6688, Fax: <852> 2730-6071

Renesas Technology Taiwan Co., Ltd.
10th Floor, No.99, Fushing North Road, Taipei, Taiwan
Tel: <886> (2) 2715-2888, Fax: <886> (2) 2713-2999

Renesas Technology Singapore Pte. Ltd.
1 Harbour Front Avenue, #06-10, Keppel Bay Tower, Singapore 098632
Tel: <65> 6213-0200, Fax: <65> 6278-8001

Renesas Technology Korea Co., Ltd.
Kukje Center Bldg. 18th Fl., 191, 2-ka, Hangang-ro, Yongsan-ku, Seoul 140-702, Korea
Tel: <82> (2) 796-3115, Fax: <82> (2) 796-2145

Renesas Technology Malaysia Sdn. Bhd
Unit 906, Block B, Menara Amcorp, Amcorp Trade Centre, No.18, Jalan Persiaran Barat, 46050 Petaling Jaya, Selangor Darul Ehsan, Malaysia
Tel: <603> 7955-9390, Fax: <603> 7955-9510

Colophon 6.0

H8/3008
Hardware Manual

Renesas Technology Corp.
2-6-2, Ote-machi, Chiyoda-ku, Tokyo, 100-0004, Japan