LM350

Three-terminal 3 A adjustable voltage regulators

Features

- Guaranteed 3 A output current
- Adjustable output down to 1.2 V
- Line regulation typically 0.005 %/V
- Load regulation typically 0.1 %
- Guaranteed thermal regulation
- Current limit constant with temperature
- Standard 3-lead transistor package

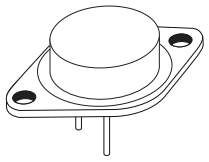

TO-3

Table 1. Device summary

Order codes	
TO-3	**Temperature range**
LM350K	0 to 125 °C

Contents

1 Diagram 3

2 Pin configuration 4

3 Maximum ratings 5

4 Electrical characteristics 6

5 Typical performance 7

6 Application hints 8

6.1 External capacitors 8

6.2 Load regulation 9

6.3 Protection diodes 9

7 Application circuits 10

8 Package mechanical data 11

9 Revision history 13

1 Diagram

Figure 1. Schematic diagram

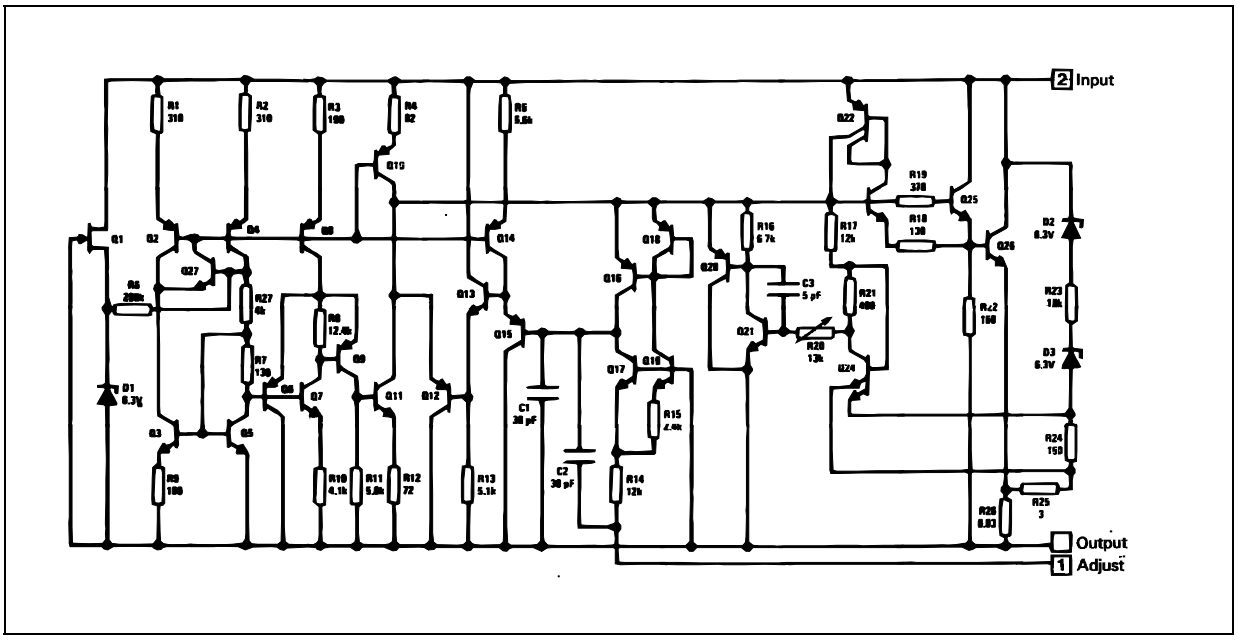

2 Pin configuration

Figure 2. Pin connections (bottom view)

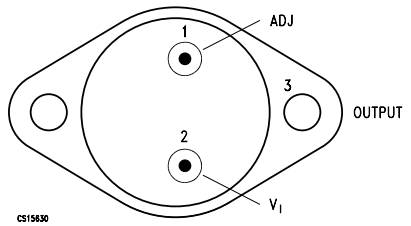

3 Maximum ratings

Table 2. Absolute maximum ratings

Symbol	Parameter	Value	Unit
P_D	Power dissipation	Internally limited	
V_I - V_O	Input-output voltage differential	35	V
T_{STG}	Storage temperature range	-65 to 150	°C
T_{LEAD}	lead temperature (Soldering, 10 seconds)	300	°C
T_{OP}	Operating junction temperature range	0 to 125	°C

Note: Absolute maximum ratings are those values beyond which damage to the device may occur. Functional operation under these condition is not implied

Table 3. Thermal data

Symbol	Parameter	Value	Unit
R_{thJC}	Thermal resistance junction-case	1.5	°C/W
R_{thJA}	Thermal resistance junction-ambient	35	°C/W

4 Electrical characteristics

Table 4. Electrical characteristics (V_I -V_O = 5V, I_O = 1.5 A. Although power dissipation is internally limited, these specifications apply to power dissipation up to 30 W, unless otherwise specified)

Symbol	Parameter	Test conditions		Min.	Typ.	Max.	Unit
K_{VI}	Line regulation (1)	T_a = 25°C, V_I - V_O = 3 to 35 V			0.005	0.03	%/V
K_{VO}	Load regulation (1)	T_a = 25°C I_O = 10 mA to 3 A	V_O ≤5 V		5	25	mV
			V_O ≥ 5 V		0.1	0.5	%
	Thermal regulation	Pulse = 20 ms			0.002	0.02	%/W
I_{ADJ}	Adjustment pin current				50	100	µA
ΔI_{ADJ}	Adjustment pin current change	I_L = 10 mA to 3 A, V_I - V_O = 3 to 35 V			0.2	5	µA
V_{REF}	Reference voltage	V_I - V_O = 3 to 35 V, I_O = 10 mA to 3 A P ≤30 W		1.19	1.24	1.29	V
K_{VI}	Line regulation (1)	V_I - V_O = 3 to 35 V			0.02	0.05	%/V
K_{VO}	Load regulation (1)	I_O = 10 mA to 3 A	V_O ≤5 V		20	70	mV
			V_O ≥ 5 V		0.3	1.5	%
K_{VT}	Temperature stability	T_J = T_{MIN} to T_{MAX}			1		%
$I_{O(MIN)}$	Minimum load current	V_I - V_O ≤35 V			3.5	10	mA
$I_{O(MAX)}$	Current limit	V_I - V_O ≤10 V	DC	3	4.5		A
			V_I - V_O = 30 V		1		
V_{NO}	RMS output noise (% of V_O)	T_a = 25°C, f = 10 Hz to 10 kHz			0.001		%
R_{VF}	Ripple rejection ratio	V_O = 10 V, f = 120 Hz			65		dB
		C_{ADJ} = 10 µF		66	86		
K_{VH}	Long term stability	T_a = 125°C			0.3	1	%

1. Regulation is measured at constant junction temperature. Changes in output voltage due to heating effects are taken into account separately by thermal rejection.

5 Typical performance

Figure 3. 1.2 V to 25 V adjustable regulator

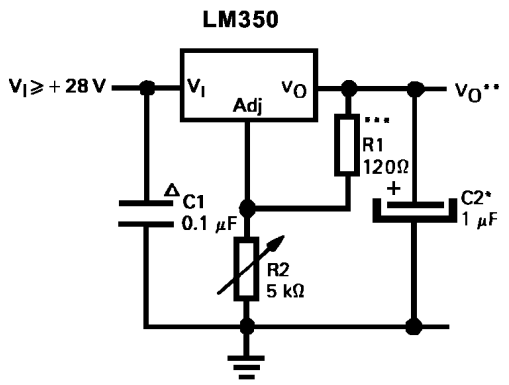

Δ Needed if device is far from filter capacitors.

* Optional-improves transient response. Output capacitors in the range of 1 µF to 100 µF of aluminium or tantalum electrolytic are commonly used to provide improved output impedance and rejection of transients

** V_O = 1.25 V (1 + R2/R1)

6 Application hints

In operation, the LM350 develops a nominal 1.25 V reference voltage, $V_{(REF)}$, between the output and adjustment terminal. The reference voltage is impressed across program resistor R_1 and, since the voltage is constant, a constant current I_1 then flows through the output set resistor R_2, giving an output voltage of:

$V_O = V_{(REF)} (1+ R_2 / R_1) + I_{ADJ} \times R_2$.

Figure 4. Circuit

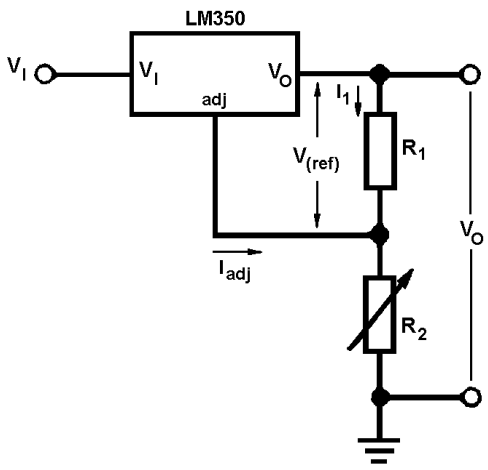

Since the 50 µA current from the adjustment terminal represents an error term, the LM350 was designed to minimize I_{ADJ} and make it very constant with line and load changes. To do this, all quiescent operating current is returned to the output establishing a minimum load current requirement. If there is insufficient load on the output, the output will rise.

6.1 External capacitors

An input bypass capacitor is recommended. A 0.1 µF disc or 1 µF solid tantalum on the input is suitable input by passing for almost all applications. The device is more sensitive to the absence of input bypassing when adjustment or output capacitors are used by the above values will eliminate the possibility of problems.

The adjustment terminal can be bypassed to ground on the LM350 to improve ripple rejection. This bypass capacitor prevents ripple form being amplified as the output voltage is increased. With a 10 µF bypass capacitor 75 dB ripple rejection is obtainable at any output level. Increases over 20 µF do not appreciably improve the ripple rejection at frequencies above 120 Hz. If the bypass capacitor is used, it is sometimes necessary to include protection diodes to prevent the capacitor from discharging through internal low current paths and damaging the device.

In general, the best type of capacitors to use are solid tantalum. Solid tantalum capacitors have low impedance even at high frequencies. Depending upon capacitor construction, it takes about 25 µF in aluminium electrolytic to equal 1 µF solid tantalum at high frequencies. Ceramic capacitors are also good at high frequencies, but some types have a large

decrease in capacitance at frequencies around 0.5 MHz. For this reason, 0.01 µF disc may seem to work better than a 0.1 µF disc as a bypass.

Although the LM350 is stable with no output capacitors, like any feedback circuit, certain values of external capacitance can cause excessive ringing. This occurs with values between 500 pF and 5000 pF. A 1 µF solid tantalum (or 25 µF aluminium electrolytic) on the output swamps this effect and insures stability.

6.2 Load regulation

The LM350 is capable of providing extremely good load regulation but a few precautions are needed to obtain maximum performance. The current set resistor connected between the adjustment terminal and the output terminal (usually 240 Ω) should be tied directly to the output of the regulator rather than near the load. This eliminates line drops from appearing effectively in series with the reference and degrading regulation. For example, a 15 V regulator with 0.05 Ω resistance between the regulator and load will have a load regulation due to line resistance of 0.05 Ω x I_L. If the set resistor is connected near the load the effective line resistance will be 0.05 Ω (1 + R_2/R_1) or in this case, 11.5 times worse.

Figure 5 shows the effect of resistance between the regulator and 140 Ω set resistor. With the TO-3 package, it is easy to minimize the resistance from the case to the set resistor, by using 2 separate leads to the case. The ground of R_2 can be returned near the ground of the load to provide remote ground sensing and improve load regulation.

6.3 Protection diodes

When external capacitors are used with any IC regulator it is sometimes necessary to add protection diodes to prevent the capacitors from discharging through low current points into the regulator. Most 20 µF capacitors have low enough internal series resistance to deliver 20 A spikes when shorted. Although the surge is short, there is enough energy to damage parts of the IC.

When an output capacitor is connected to a regulator and the input is shorted, the output capacitor will discharge into the output of the regulator. The discharge current depends on the value of the capacitor, the output voltage of the regulator, and the rate of decrease of V_I. In the LM350 this discharge path is through a large junction that is able to sustain 25 A surge with no problem. This is not true of other types of positive regulators. For output capacitors of 100 µF or less at output of 15 V or less, there is no need to use diodes.

The bypass capacitor on the adjustment terminal can discharge through a low current junction. Discharge occurs when either the input or output is shorted. Internal to the LM350 is a 50 Ω resistor which limits the peak discharge current. No protection is needed for output voltages of 25 V or less and 10 µF capacitance. *Figure 6* shows an LM350 with protection diodes included for use with outputs greater than 25 V and high values of output capacitance.

7 Application circuits

Figure 5. Regulator with line resistance in output lead

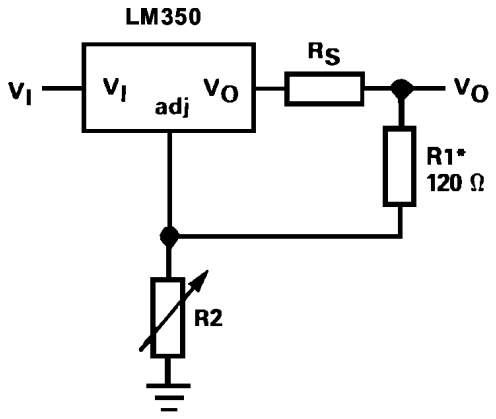

Figure 6. Regulator with protection diodes

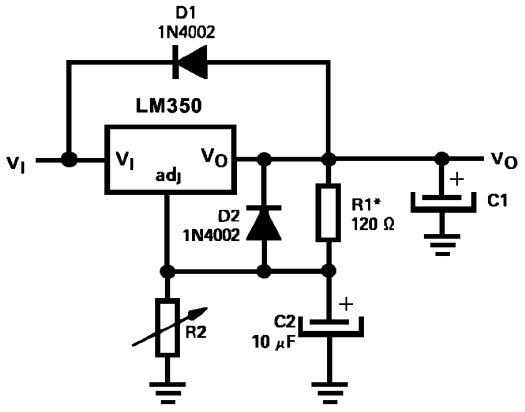

8 Package mechanical data

In order to meet environmental requirements, ST offers these devices in ECOPACK® packages. These packages have a lead-free second level interconnect. The category of second Level Interconnect is marked on the package and on the inner box label, in compliance with JEDEC Standard JESD97. The maximum ratings related to soldering conditions are also marked on the inner box label. ECOPACK is an ST trademark. ECOPACK specifications are available at: www.st.com.

TO-3 mechanical data

Dim.	mm.			inch.		
	Min.	Typ.	Max.	Min.	Typ.	Max.
A		11.85			0.466	
B	0.96	1.05	1.10	0.037	0.041	0.043
C			1.70			0.066
D			8.7			0.342
E			20.0			0.787
G		10.9			0.429	
N		16.9			0.665	
P			26.2			1.031
R	3.88		4.09	0.152		0.161
U			39.5			1.555
V		30.10			1.185	

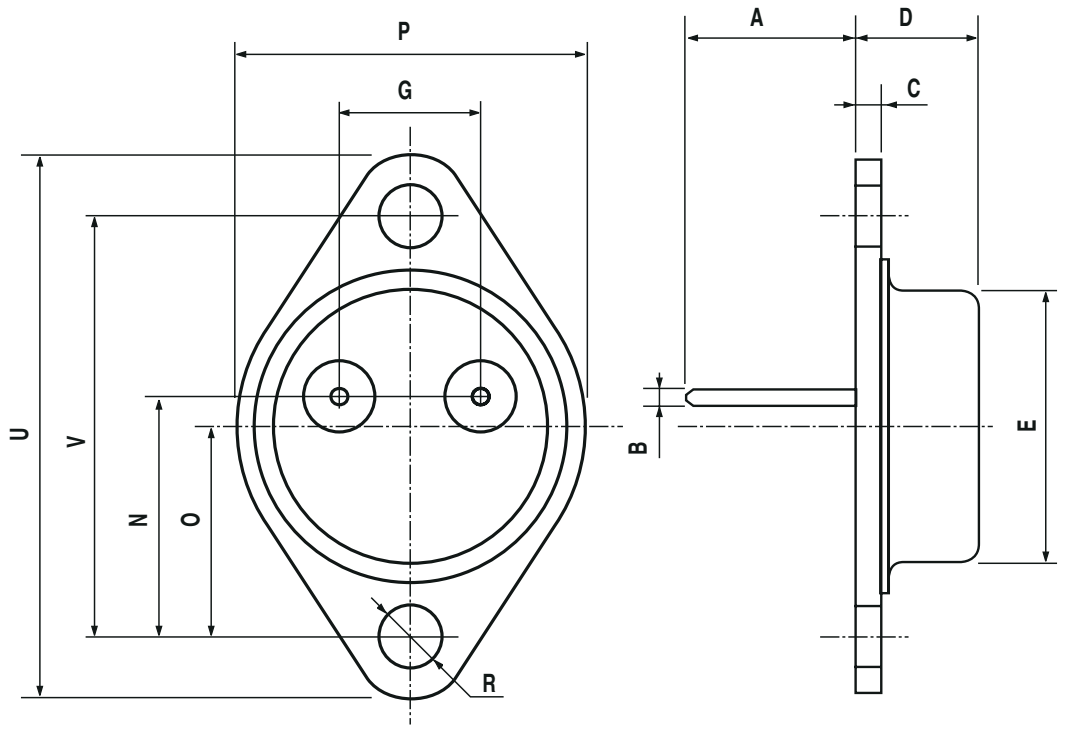

P003C/C

9 Revision history

Table 5. Document revision history

Date	Revision	Changes
29-Sep-2006	1	
11-Feb-2008	2	Added: *Table 1 on page 1*.

Please Read Carefully:

Information in this document is provided solely in connection with ST products. STMicroelectronics NV and its subsidiaries (“ST”) reserve the right to make changes, corrections, modifications or improvements, to this document, and the products and services described herein at any time, without notice.

All ST products are sold pursuant to ST’s terms and conditions of sale.

Purchasers are solely responsible for the choice, selection and use of the ST products and services described herein, and ST assumes no liability whatsoever relating to the choice, selection or use of the ST products and services described herein.

No license, express or implied, by estoppel or otherwise, to any intellectual property rights is granted under this document. If any part of this document refers to any third party products or services it shall not be deemed a license grant by ST for the use of such third party products or services, or any intellectual property contained therein or considered as a warranty covering the use in any manner whatsoever of such third party products or services or any intellectual property contained therein.

UNLESS OTHERWISE SET FORTH IN ST’S TERMS AND CONDITIONS OF SALE ST DISCLAIMS ANY EXPRESS OR IMPLIED WARRANTY WITH RESPECT TO THE USE AND/OR SALE OF ST PRODUCTS INCLUDING WITHOUT LIMITATION IMPLIED WARRANTIES OF MERCHANTABILITY, FITNESS FOR A PARTICULAR PURPOSE (AND THEIR EQUIVALENTS UNDER THE LAWS OF ANY JURISDICTION), OR INFRINGEMENT OF ANY PATENT, COPYRIGHT OR OTHER INTELLECTUAL PROPERTY RIGHT.

UNLESS EXPRESSLY APPROVED IN WRITING BY AN AUTHORIZED ST REPRESENTATIVE, ST PRODUCTS ARE NOT RECOMMENDED, AUTHORIZED OR WARRANTED FOR USE IN MILITARY, AIR CRAFT, SPACE, LIFE SAVING, OR LIFE SUSTAINING APPLICATIONS, NOR IN PRODUCTS OR SYSTEMS WHERE FAILURE OR MALFUNCTION MAY RESULT IN PERSONAL INJURY, DEATH, OR SEVERE PROPERTY OR ENVIRONMENTAL DAMAGE. ST PRODUCTS WHICH ARE NOT SPECIFIED AS "AUTOMOTIVE GRADE" MAY ONLY BE USED IN AUTOMOTIVE APPLICATIONS AT USER’S OWN RISK.

Resale of ST products with provisions different from the statements and/or technical features set forth in this document shall immediately void any warranty granted by ST for the ST product or service described herein and shall not create or extend in any manner whatsoever, any liability of ST.

ST and the ST logo are trademarks or registered trademarks of ST in various countries.

Information in this document supersedes and replaces all information previously supplied.

The ST logo is a registered trademark of STMicroelectronics. All other names are the property of their respective owners.

© 2008 STMicroelectronics - All rights reserved

STMicroelectronics group of companies

Australia - Belgium - Brazil - Canada - China - Czech Republic - Finland - France - Germany - Hong Kong - India - Israel - Italy - Japan - Malaysia - Malta - Morocco - Singapore - Spain - Sweden - Switzerland - United Kingdom - United States of America

www.st.com