PLESSEY
Semiconductors

ML923

REMOTE CONTROL RECEIVER

The ML923 is an MOS/LSI monolithic integrated circuit for use as a receiver of remote control signals for television control. It accepts 24 of the 32 codes transmitted by the SL490 transmitter circuit in the Pulse Position Modulation (PPM) method of coding.

FEATURES

- 16 Channel Selection Codes
- Single Analogue Output
- Mute Output (Toggle)
- On-set Controls—Channel Step, ON, Reset
- Normalise to $\frac{3}{8}$ of Max Output on Analogue Output
- Outputs Provide Control of ON/STANDBY, Analogue Mute, and AFC Defeat
- Choice of Power-Up Function:
  a) Power Up to Standby State, Switch to ON State by Local or Remote Command and STANDBY by Remote Command.
  b) Power Up to ON State, Switch OFF with Solenoid Operated Mains Switch by Local or Remote Command.

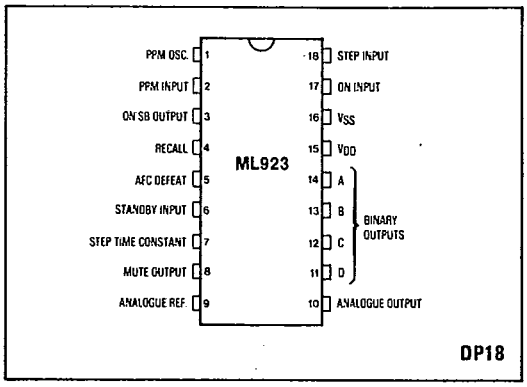

Fig.1 Pin connections (top view)

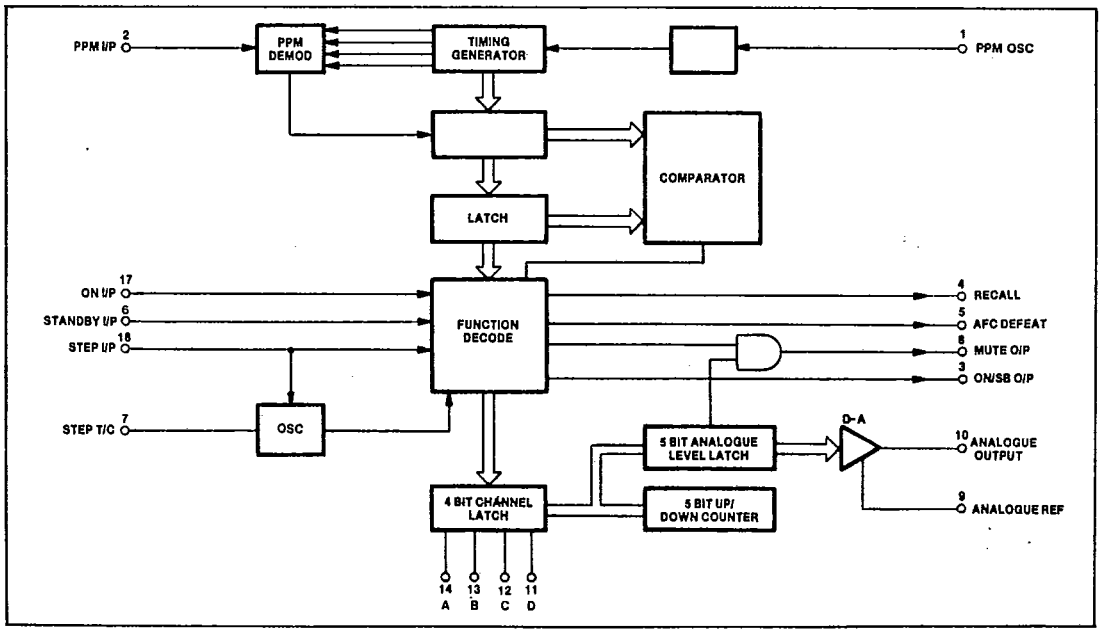

Fig.2 ML923 block diagram

This Material Copyrighted By Its Respective Manufacturer

ELECTRICAL CHARACTERISTICS

T-77-11

Test conditions (unless otherwise stated):
$T_{amb} = +25°C$, $V_{SS} = 0V$, $V_{DD} = -16V$

Characteristics	Pin	Value			Units	Conditions
		Min.	Typ.	Max.		
Supply voltage	1	14		18	V	
Supply current	1		6		mA	
Input logic level high	6, 17, 18	-1		0	V	
Input logic level low		V_{DD}		$V_{DD}+3.5$	V	
Output logic level high	3, 4, 11, 14	-1.5		0V	V	50k to V_{DD}
Output logic level low	8	V_{DD}		$V_{DD}+0.5$	V	
Analogue output current range	10	0		$\frac{31}{8}$	1 Ref	3.9k to V_{DD}
Analogue step size	10	0	$\frac{1}{8}$	$\frac{1}{4}$	1 Ref	$V_{out} < V_{DD}+5V$
D/A reference, I ref	9	-250	-345	-455	mA	33kΩ to V_{DD}
PPM		15		150k	Hz	Typical TC
Oscillator frequency	1		3k		Hz	C = 22nF R = 100kΩ
On input or standby input time constant for power on	6 or 17	250		500	ms	
Step time constant	7		1		s	C = 470nF R = 3.3MΩ
PPM input level high	2	-1		0	V	
PPM input level low	2	V_{DD}		-6	V	
PPM input pulse width	2	.1		22 T_{osc}	μs	$T = \frac{1}{f_{osc}}$

Note 1 R_{osc} (pin 5) is 56k-156kΩ $f_{osc} \simeq \frac{1}{0.15CR}$ ±20%

OPERATING NOTES

The receiver operates on a timescale fixed by an internal oscillator and its external timing components. The oscillater may be adjusted to any value between 15Hz and 150kHz (allowing different receivers to respond to different transmission rates within the same operating area).

Checks are made to ensure 6 pulses, or 5 bits, are received for a word to be valid, and only after two consecutive and identical words is the receiver allowed to respond to the incoming code. Channel step time period is derived from an external time constant.

PIN FUNCTIONS

Positive Logic: Logic '1' = V_{SS}, 0V Logic '0' = V_{DD}, -16V

1. Oscillator Time Constant An RC Time Constant at this pin defines the internal clock frequency. The clock frequency may be varied from 15Hz to 150kHz.

2. PPM Input The output of the Front End Amplifier is connected to the pin; the signal must consist of a normal low level with pulses to high level, corresponding to the PPM pulse from the transmitter.

3. ON/SB Output Open drain output. Logic '0' denotes on-set. Logic '1' standby set. Set to '0' when channel number changes, and by ON input at logic '0', set to '1' by standby input or by transmitter selected OFF.

4. Recall O/P Open drain output. A '0' may be used to trigger an on-screen display. A '0' is output during an input at pin 17, ON input. The pulse to logic '0' is generated by any channel change if circuit switches to ON from Standby, and by recall and normalise commands from the remote transmitter.

5. AFC O/P Open drain output. A logic '0' can inhibit tuner AFC. A static output is generated by manual ON control. A pulse is generated by any channel number change.

6. Standby Input A logic '0' will select standby state and normalise the analogue output to 3/8 maximum and select programme 1. An RC time constant may be connected to select standby at power ON.

7. Channel Step Time Constant An RC time constant defines the time period between increments of the channel number when stepping.

8. MUTE Output This will change state (toggle) on receptin of a Mute command or will remain at logic '1' if the D-A output is zero. The output is reset by any channel change command.

9. Analogue Reference A current drain attached to this input will define the current step of the D-A output. The current is equal to 8 output current steps.

10. Analogue Output The output of a current mirror D-A convertor provides a current source of between 0mA and 1.3mA. It is variable in 32 steps, UP or DOWN. It is normalised to 3/8 maximum value by the ON/SB input, and by normalise command from the transmitter.

11, 12, 13, 14. Channel Selection Outputs These outputs encode the 16 channels in binary code.

	A	B	C	D
Channel 1	0	0	0	0
Channel 16	1	1	1	1

Set to channel 1 on set switch ON.

15. V_{DD} -14V to -18V power supply

16. V_{SS} 0V (Ground)

17. ON I/P A logic '0' will switch the ON/SB output to ON (logic '0'). Channel 1 is selected and analogue output is normalised to 3/8 maximum. An RC time constant may be connected to select set ON at power on. The AFC defeat signal is generated and Mute is reset.

18. Step Input The channel code will step up by 1 as long as the pin is held at logic '0'. The time period between steps is defined by an RC constant on pin 7. When the channel code reaches 16 it will go to 1 next step. A step input will set ON/SB output to ON and normalise the analogue output. Mute is reset if analogue = 0.

This Material Copyrighted By Its Respective Manufacturer

T-77-11

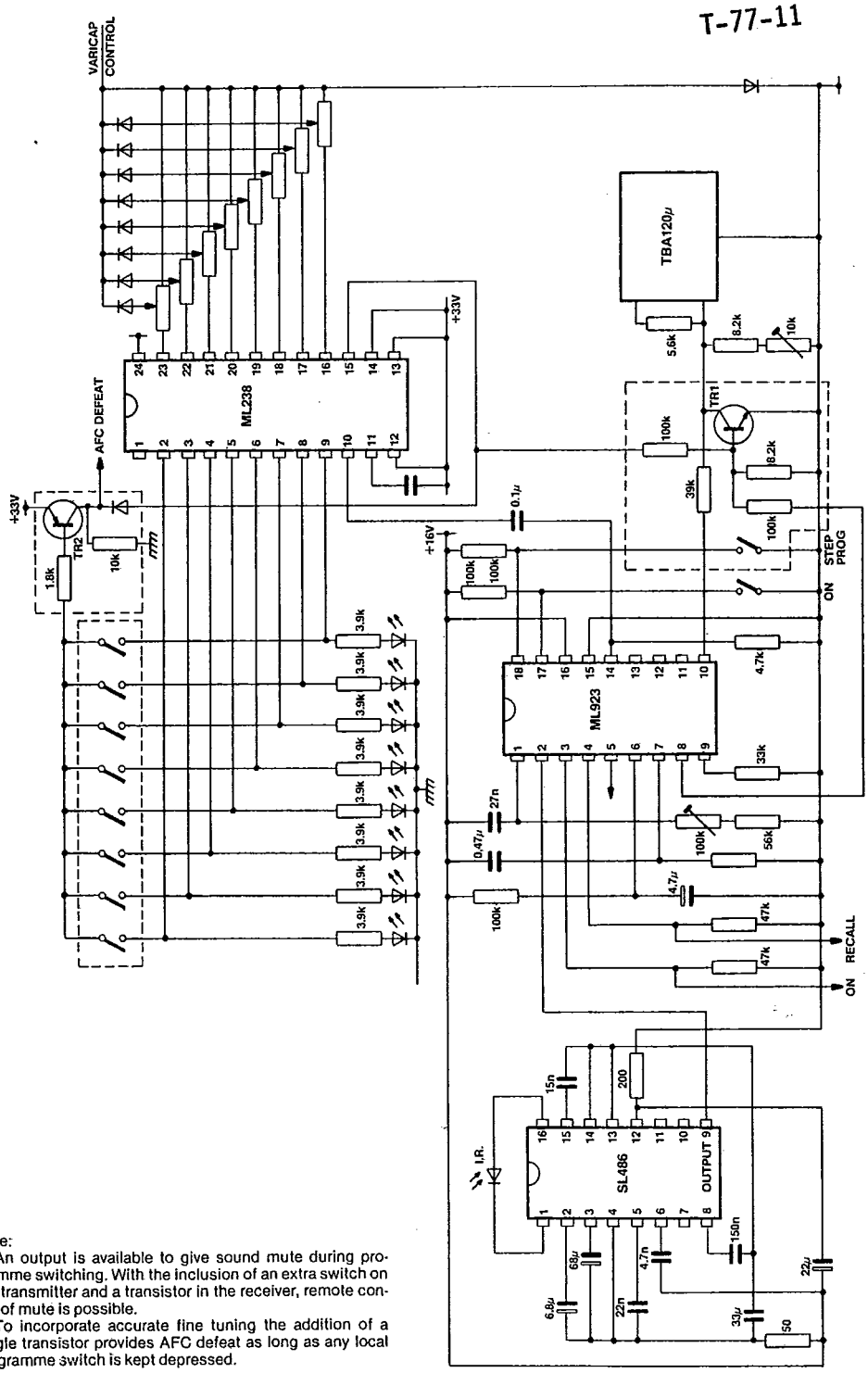

Note:
1. An output is available to give sound mute during programme switching. With the inclusion of an extra switch on the transmitter and a transistor in the receiver, remote control of mute is possible.
2. To incorporate accurate fine tuning the addition of a single transistor provides AFC defeat as long as any local programme switch is kept depressed.

Fig.3 Receiver application

This Material Copyrighted By Its Respective Manufacturer

CODE					FUNCTION
E	D	C	B	A	
0	0	0	0	0	Channel 1
0	0	0	0	1	Channel 2
0	0	0	1	0	Channel 3
0	0	0	1	1	Channel 4
0	0	1	0	0	Channel 5
0	0	1	0	1	Channel 6
0	0	1	1	0	Channel 7
0	0	1	1	1	Channel 8
0	1	0	0	0	Channel 9
0	1	0	0	1	Channel 10
0	1	0	1	0	Channel 11
0	1	0	1	1	Channel 12
0	1	1	0	0	Channel 13
0	1	1	0	1	Channel 14
0	1	1	1	0	Channel 15
0	1	1	1	1	Channel 16
1	0	1	0	1	Channel Step +
1	0	1	0	0	Analogue +
1	1	0	1	0	Recall
1	1	0	0	1	Mute (Toggle)
1	1	0	1	1	Normalise
1	1	0	0	0	OFF
1	1	1	0	1	Channel Step-
1	1	1	0	0	Analogue-

Table 1 Command set

ABSOLUTE MAXIMUM RATINGS (V_{SS} = 0V).

T-77-11

Supply Voltage V_{DD}	+0.3V to -25V
Voltage at any input	+0.3V to -25V
Maximum power dissipation	600mW
Operating temperature range	-10° C to +65° C
Storage temperature range	-55° C to +125° C

This Material Copyrighted By Its Respective Manufacturer