LM96551

LM96551 Ultrasound Transmit Pulser

Literature Number: SNAS511A

November 30, 2011

LM96551

Ultrasound Transmit Pulser

General Description

The LM96551 is an eight-channel monolithic high-voltage, high-speed pulse generator for multi-channel medical ultrasound applications. It is well-suited for use with National's LM965XX series chipset which offers a complete medical ultrasound solution targeted towards low-power, portable systems.

The LM96551 contains eight high-voltage pulsers with integrated diodes generating ±50V bipolar pulses with peak currents of up to 2A and pulse rates of up to 15 MHz. Advanced features include low-jitter and low-phase-noise output pulses ideal for continuous-wave (CW) modes of operation. Active clamp circuitry is integrated for ensuring low harmonic distortion of the output signal waveform.

The LM96551 also featuers a low-power operation mode and over-temperature protection (OTP) which are enabled by on-chip temperature sensing and power-down logic.

Applications

- Ultrasound Imaging

Features

- 8-channel high-voltage CMOS pulse generator
- Output pulses with ±50V and 2A peak current
- Active damper with built-in blocking diodes
- Built-in floating supply voltages for output stage
- Up to 15 MHz operating frequency
- Matched delays for rising and falling edges
- Low second harmonic distortion allows and improves harmonic imaging
- Continuous-wave (CW) operation down to ±3.3V
- Low Phase noise enables Doppler measurements -145 dBc/Hz Phase Noise at 10 MHz (1 kHz offset)
- Output state over-temperature protection
- Blocking diodes for direct interface to transducer
- 2.5V to 5.0V CMOS logic interface
- Low-power consumption per channel
- Over Temperature Protection

Key Specifications

Output voltage	±50	V
Output peak current	±2.0	A
Output pulse rate	Up to 15	MHz
Rise/fall delay matching (max)	< 3.7	ns
Pulser HD2 (5 MHz)	-40	dB
Operating Temp.	0 to +70	°C

Block Diagram

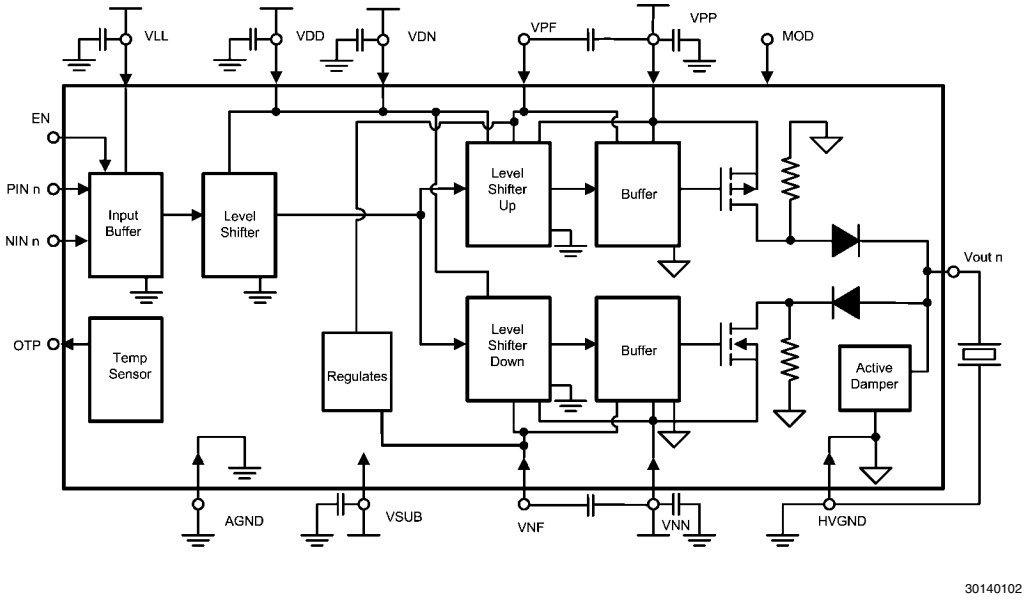

© 2011 Texas Instruments Incorporated

Typical Application

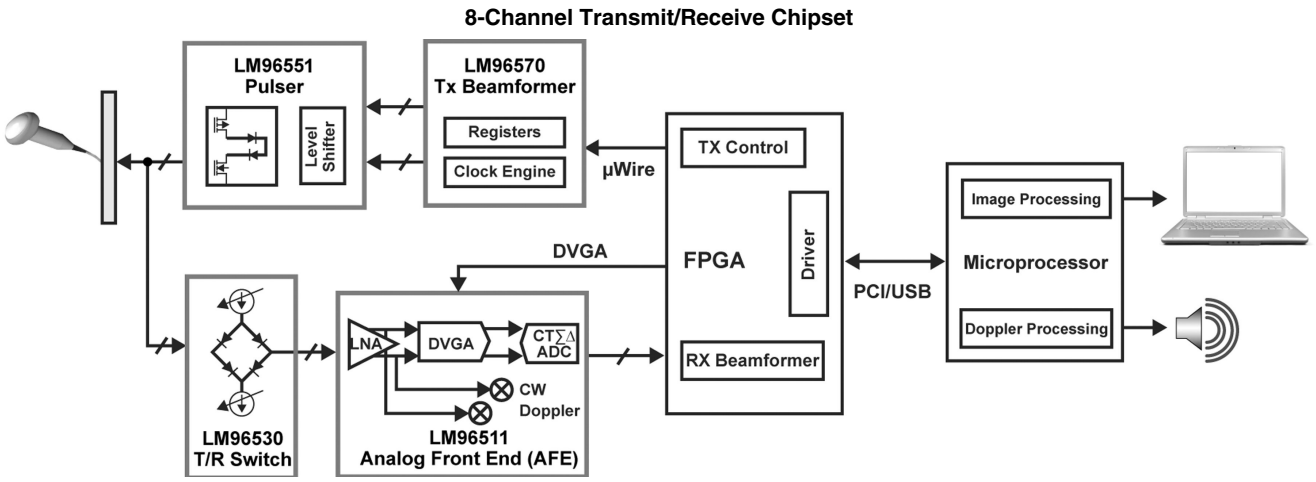

30140107

Pin Diagram

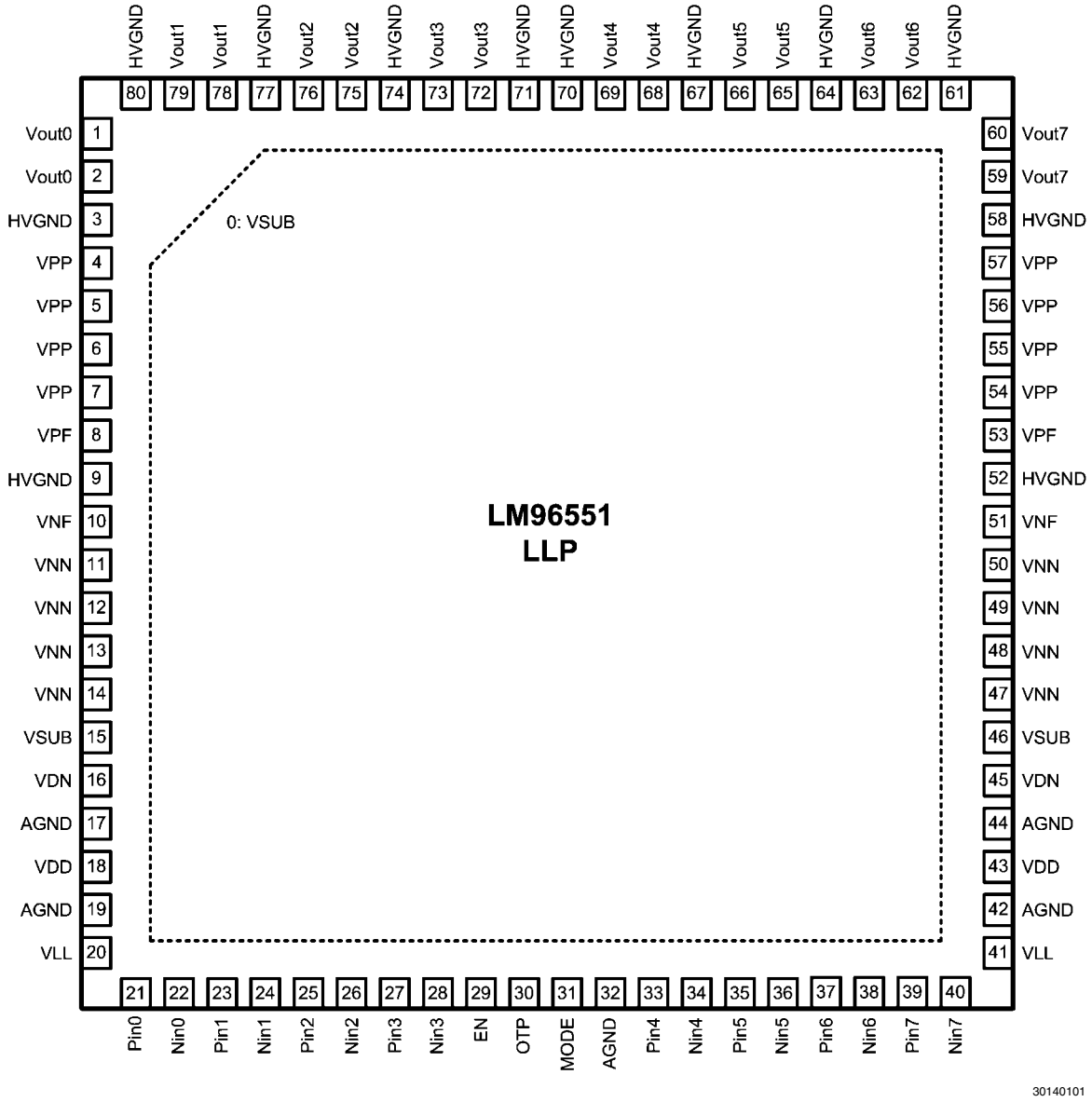

FIGURE 1. Pin Diagram of LM96551

Ordering Information

Order Number	Package Type	NSC Package Drawing	Supplied As
LM96551SQ	80 Lead LLP	SQA80A	1000
LM96551SQE			250
LM96551SQX			2000

TABLE 1. Pin Descriptions

Pin No.	Name	Type	Function and Connection
21, 23, 25, 27, 33, 35, 37, 39	PIN n=0...7	Input	Logic control positive output channel P 1 = ON 0 = OFF
22, 24, 26, 28, 34, 36, 38, 40	NIN n=0...7	Input	Logic control negative output channel N 1 = ON 0 = OFF
59, 60	V_{OUT7}	Output	High voltage output of channels 0 to 7
62, 63	V_{OUT6}		
65, 66	V_{OUT5}		
68, 69	V_{OUT4}		
72, 73	V_{OUT3}		
75, 76	V_{OUT2}		
78, 79	V_{OUT1}		
1, 2	V_{OUT0}		
29	EN	Input	Chip power enable 1 = ON 0 = OFF
31	MODE	Input	Output current mode control 1 = Max Current 0 = Low Current
30	OTP	Output	Over-temperature indicating IC temp > 125°C 0 = Over-temperature 1 = Normal temperature This pin is open-drain.
4, 5, 6, 7, 54, 55, 56, 57	VPP	Power	Positive high voltage power supply (+3.3V to +50V)
11, 12, 13, 14, 47, 48, 49, 50	VNN	Power	Negative high voltage power supply (-3.3V to -50V)
8, 53	VPF	Power	Positive internal floating power supply (VPP -10V)
10, 51	VNF	Power	Negative internal floating power supply (VNN +10V)
18, 43	VDD	Power	Positive level-shifter supply voltage (+10V)
16, 45	VDN	Power	Negative level-shifter supply voltage (-10V)
20, 41	VLL	Power	Logic supply voltage. Hi voltage reference input (+2.5 to +5V)
0, 15, 46	VSUB	Power	All VSUB pins must be connected to most negative potential of the IC. NOTE: The exposed thermal pad is connected to VSUB.
3, 9, 52, 58, 61, 64, 67, 70, 71, 74, 77, 80	HVGND	Ground	High voltage reference potential (0V)
17, 19, 32, 42, 44	AGND	Ground	Analog and Logic voltage reference input, logic ground (0V)

Absolute Maximum Ratings (Note 1)

If Military/Aerospace specified devices are required, please contact the Texas Instruments Sales Office/ Distributors for availability and specifications.

Maximum Junction Temperature (T_{JMAX})	+150°C
Storage Temperature Range	−40°C to +125°C
Supply Voltage (VDD)	−0.3V to +12V
Supply Voltage (VDN)	+0.3V and −12V
Supply Voltage (VPP)	−0.3V and +55V
Supply Voltage (VNN)	+0.3V and −55V
Supply Voltage (VSUB)	−65V
IO Supply Voltage (VLL)	−0.3V to +5.5V
Voltage at Logic Inputs	−0.3V to VLL +0.3V

Operating Ratings

Operation Junction Temperature	0°C to + 70°C
VPP, −VNN; High-voltage supply	+3.3V to +50V
VDD, −VDN; Level-shift supply	+9V to 11V
VLL, Logic Supply	+2.4V to +5.3V
VSUB, Substrate bias supply	must be most negative supply
Package Thermal Resistance (θ_{JA})	19.7 °C/W
ESD Tolerance	
Human Body Model	2KV
Machine Model	150V
Charge Device Model	750V

Analog Characteristics

Unless otherwise stated, the following conditions apply

VLL = +3.3V, VPP = −VNN = 50V, VSUB = −55V, VDD = −VDN = 10V, R_L = 2KΩ, T_A = 25°C, Fin=5MHz, Mode = LO, EN = HI.

Symbol	Parameter	Conditions		Min	Typ	Max	Units
F_{OUT}	Output Frequency Range	R_L = 100Ω		1		15	MHz
	Output Voltage Range			-48.5		+48.5	V
	Output Current	2% Duty Cycle			2		A
	Output Current	100% Duty Cycle, Mode=HI			0.6		A
HD2	Second harmonic distortion	R_L = 100Ω, C_L = 330pF			-40		dBc
R_{ON}	Output ON Resistance	100 mA			7	11	Ω
	Output clamp	Positive or Negative pulse			2		A
	Power Supply Current	Pin = Nin = LO	VPP		3.2	7	mA
			VNN		3.4	8	mA
			VDD		12	18	mA
			VDN		8	13	mA
			VLL		25	50	µA
			VSUB		0.7	6	mA
		En = LO	VPP		3.2	7	mA
			VNN		3.4	8	mA
			VDD		4	7	mA
			VDN		3	6.5	mA
			VLL		25	50	µA
			VSUB		0.7	6	mA
OTP	Over Temperature Protection				125		°C
σ_{OTP}	OTP sigma				3.0		°C
$Hsys_{OTP}$	OTP hysteresis				5.5		°C

AC and Timing Characteristics

Unless otherwise stated, the following conditions apply

VLL = +3.3V, VDD = −VDN = 10V, VSUB = −55V, VPP = −VNN = 50V, R_L = 100Ω, C_L = 330pF, Fin=5MHz, T_A = 25°C. Mode = LO, EN = HI.

Symbol	Parameter	Conditions	Min	Typ	Max	Unit
t_r	Output rise time			19	29	ns
t_f	Output fall time			19	29	
t_E	Enable time			1		µs
t_{dr}	Delay time on inputs rise			32	39	ns
t_{df}	Delay time on inputs fall			32	39	
$\lvert t_{dr} - t_{dr} \rvert$	Delay time mismatch	P-to-N (see Note 2)			3.7	
t_{dm}	Delay on mode change			1		µs

DC Characteristics

Unless otherwise stated, the following conditions apply.
VLL = +3.3V, VDD = −VDN = 10V, VSUB = −55V, VPP = −VNN = 50V, T_A = 25°C,

Symbol	Parameter	Conditions	Min	Typ	Max	Unit
V_{IL}	Low Input “LO” threshold				1	V
V_{IH}	High Input “HI” threshold		2.3			V
I_{IN}	input current			1		µA

Note 1: Absolute Maximum Ratings are limits beyond which damage to the device may occur. Operating Ratings are conditions under which operation of the device is guaranteed to be functional, but do not guarantee specific performance limits. For guaranteed specifications and test conditions, see the Electrical Characteristics.

Note 2: The delay time mismatch can be adjust to be less than 0.8ns with the LM96570 duty cycle control function.

Note 3: 10.24 MHz Differential Input signal from LMK04800 Evaluation board with 122.88 MHz Crystek CVHD-950 VCXO clock source. The LMK04800 clock output channel was configured with a divide value of 12 and LVCMOS outputs with opposite polarity.

Overview

The LM96551 pulser provides an 8-channel transmit side solution for medical ultrasound applications suitable for integration into multi-channel (128/256 channel) systems. Its flexible, integrated ±50V pulser architecture enables low-power designs targeting portable systems. A complete system can be designed using National's companion LM965XX chipset.

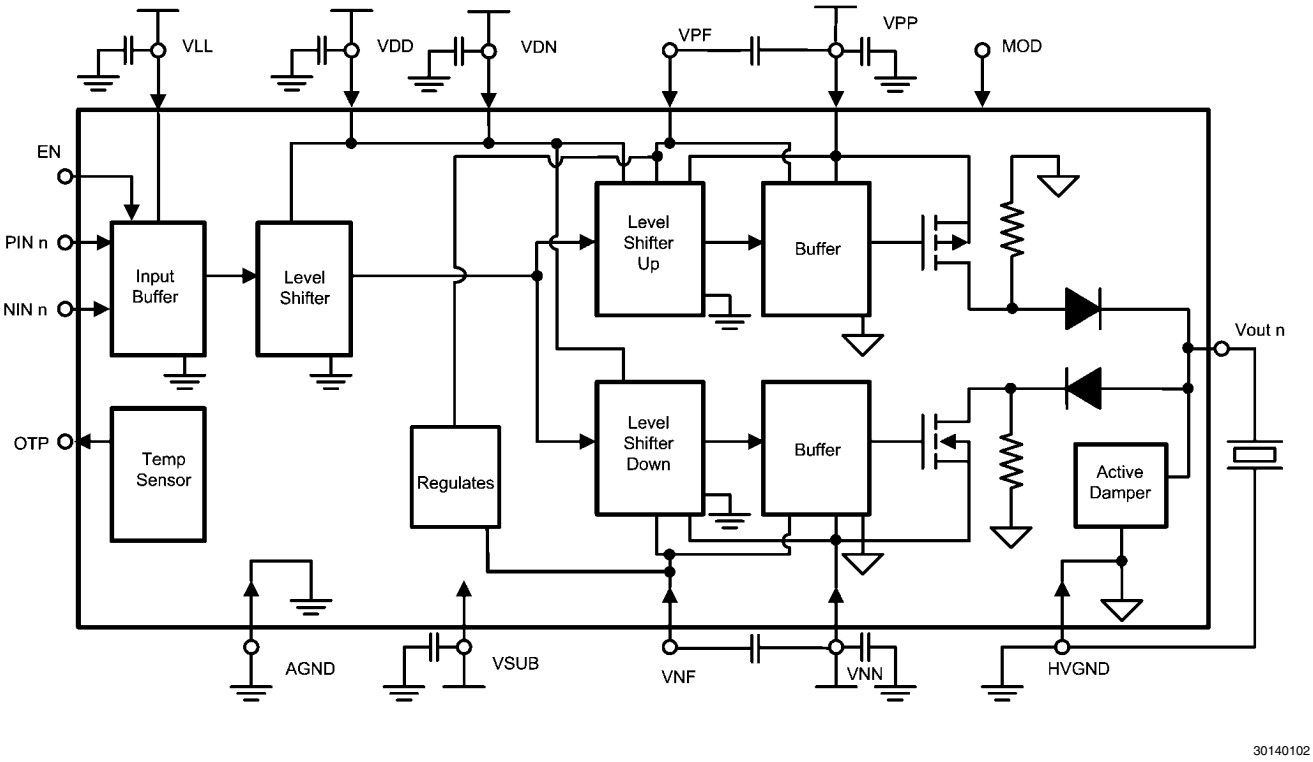

FIGURE 2. Block Diagram of High-Voltage Pulser Channel

A functional block diagram of the LM96551 is shown in . It has an input buffer at its CMOS logic interface, which is powered by VLL (2.5 to 5.0V). When EN=HI, driving a channel's inputs (PIN n or NIN n) HI will result in a positive or negative pulse at the channel's output pin (V_{OUT} n), respectively. The output pins V_{OUT} are pulled to either the positive or negative supplies, VPP or VNN by power MOSFETs.

When PIN and NIN are both LO, Vout is actively clamped to GNDHI at 0V. This clamping reduces harmonic distortions compared to competing architectures that use bleeding resistors for implementing the return to zero of the output. **The user must avoid the condition in which PIN and NIN are both HI simultaneously, as this will damage the output stage!**

The impedance of the output stage can be controlled via the Mode-pin. When the Mode = HI as shown, only one output transistor pair drives the output resulting in a peak current of 600 mA at VPP = -VNN = 50V. When Mode=LO, a peak-current of 2A is achievable resulting in faster transients at the output. However, faster output transients can lead to significant overshoot of the output signal. This can be avoided using the lower drive current option.

Continuous-wave (CW) applications are supported for low power consumption down to VPP = -VNN = 3.3V with Mode =HI.

Internally, the CMOS logic input signals are level shifted to VDD = 10V and VDN = -10V for pulse transmission. The outputs of the level shifter drive the high-voltage P and N drivers that control the output power MOSFETs, which are supplied from the positive and negative rails VPP and VNN, respectively. The high-voltage rails are designed for a maximum of 50V; however, they can be operated down to 3.3V. The necessary gate-overdrive voltage levels for the output drivers are internally generated from the high-voltage rails.

Over-Temperature Protection (OTP) is implemented by continuously monitoring the on-chip temperature. The OTP output (open drain) pin goes LO when the chip temperature exceeds a critical level. Prior to this event, the user must ensure that the chip is powered down before fatal damage occurs. In addition to a primary software controlled safety shutdown, the OTP pin can be also be hard-wired to the EN pin as a secondary safety measure.

Timing Diagrams

RISE AND FALL TIME

The timing diagram shown in *Figure 3* defines the rise and fall times tr and tf.

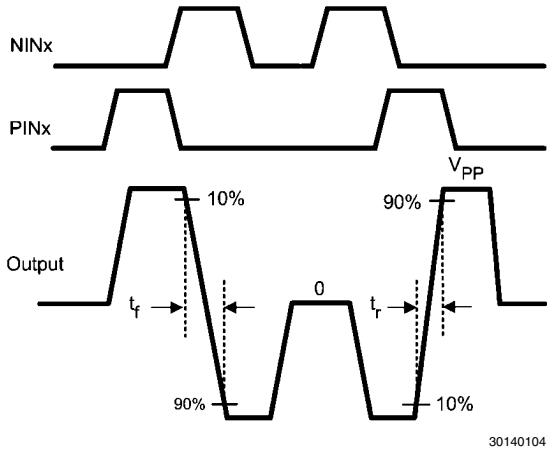

FIGURE 3. Timing Diagram Defining Rise and Fall Times tr and tf, respectively

INPUT TO OUTPUT DELAY

The timing diagram shown in *Figure 4* defines the delays between the input and output signals.

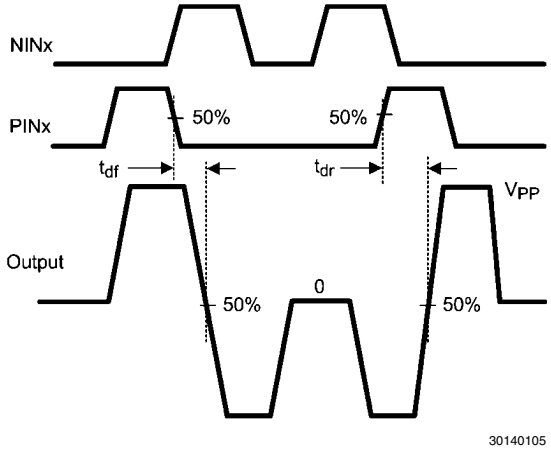

FIGURE 4. Timing Diagram Defining Input-to-Output Delays Times

Typical Performance Characteristics

Unless otherwise stated, the following conditions apply

VLL = +3.3V, VDD = −VDN = 10V, VSUB = −55V, VPP = −VNN = 50V, R_L = 100Ω, C_L = 330pF, Fin=5MHz, T_A = 25°C. Mode = LO, EN = HI

Return-to-Zero Rise Time (R_L=2KΩ)

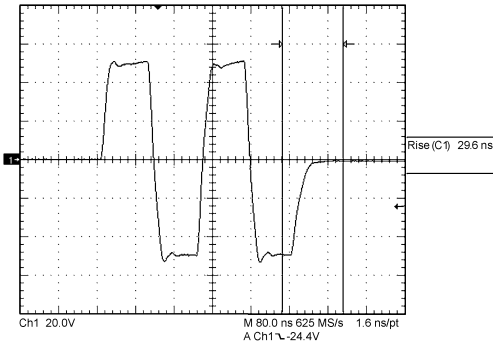

30140108

Return-to-Zero Fall Time (R_L=2KΩ)

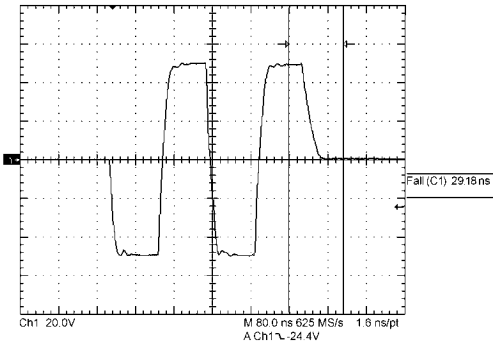

30140109

Harmonic Distortion (8 pulses)

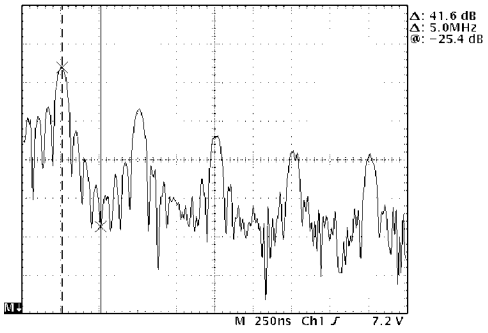

30140110

Differential Input vs. Pulser Output Phase Noise (*Note 3*)

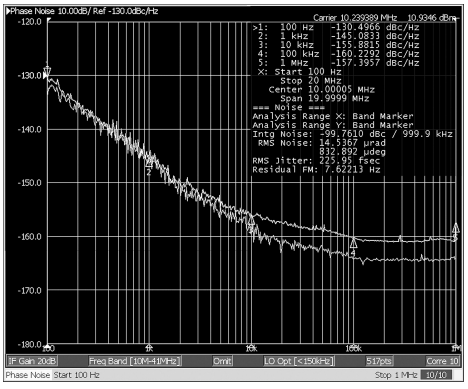

30140111

Constant 5W Total Power R_L=300Ω
100% CW mode, Mode=HI, VSUB=-10V

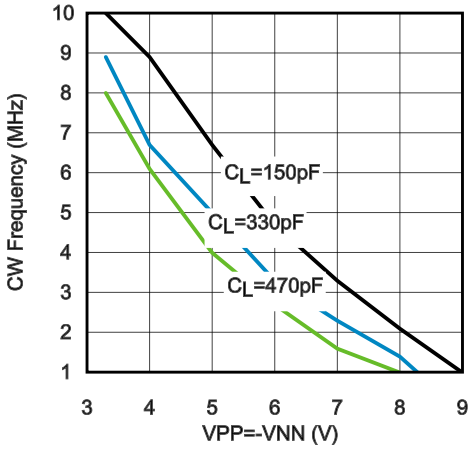

30140112

Over Temperature Protection

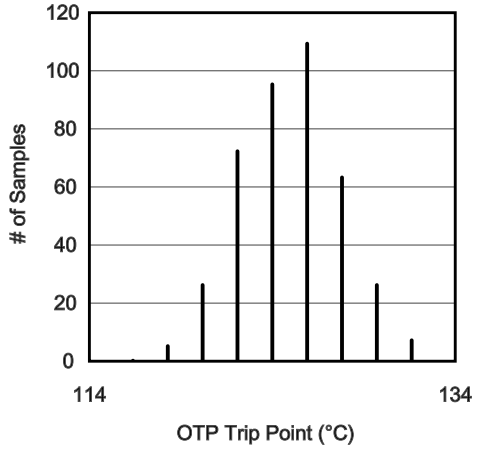

30140113

Functional Description

Note that the case, PINn = NNn = HI is not allowed as it will damage the output transistors.

Logic inputs			Output
EN	PINn	NINn	Voutn
1	0	0	0V
1	1	0	VPP - 0.7V
1	0	1	VNN + 0.7V
1	1	1	**not allowed**
0	X	X	0V

Applications

POWER-UP AND POWER-DOWN SEQUENCES

VSUB must always be the most negative supply, i.e., it must be equal to or more negative than the most negative supply, VNN or VDN.

Power UP Sequence:

1. Turn ON VSUB, hold EN pin LO
2. Turn On VLL
3. Turn ON VDD, VDN, VPP, and VNN

Power DOWN Sequence:

1. Turn OFF VDD, VDN, VPP & VNN
2. Turn OFF VLL
3. Turn OFF VSUB

Physical Dimensions inches (millimeters) unless otherwise noted

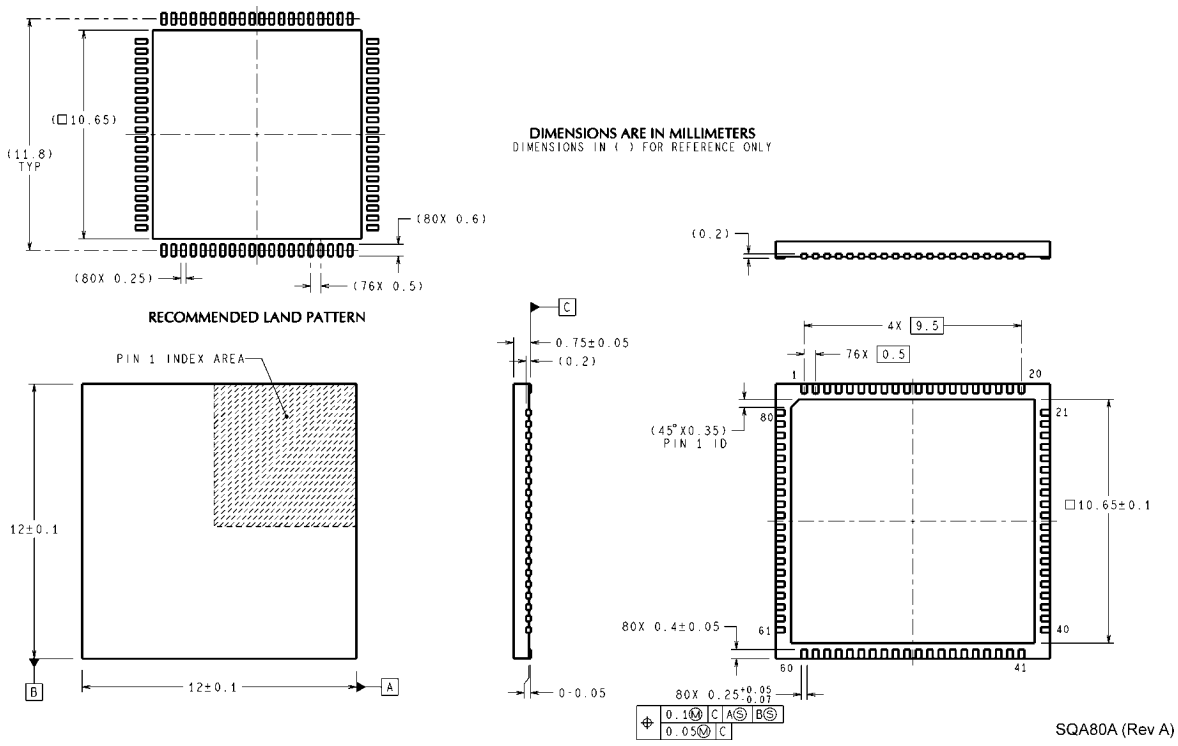

80-Lead LLP Package
NS Package Number SQA80A

Notes

TI/NATIONAL INTERIM IMPORTANT NOTICE

Texas Instruments has purchased National Semiconductor. As of Monday, September 26th, and until further notice, products sold or advertised under the National Semiconductor name or logo, and information, support and interactions concerning such products, remain subject to the preexisting National Semiconductor standard terms and conditions of sale, terms of use of website, and Notices (and/or terms previously agreed in writing with National Semiconductor, where applicable) and are not subject to any differing terms and notices applicable to other TI components, sales or websites. To the extent information on official TI and National websites and business social networking media, etc., pertains to both TI and National-branded products, both companies' instructions, warnings and limitations in the above-referenced terms of use apply.

Following are URLs where you can obtain information on other Texas Instruments products and application solutions:

Products		Applications	
Audio	www.ti.com/audio	Communications and Telecom	www.ti.com/communications
Amplifiers	amplifier.ti.com	Computers and Peripherals	www.ti.com/computers
Data Converters	dataconverter.ti.com	Consumer Electronics	www.ti.com/consumer-apps
DLP® Products	www.dlp.com	Energy and Lighting	www.ti.com/energy
DSP	dsp.ti.com	Industrial	www.ti.com/industrial
Clocks and Timers	www.ti.com/clocks	Medical	www.ti.com/medical
Interface	interface.ti.com	Security	www.ti.com/security
Logic	logic.ti.com	Space, Avionics and Defense	www.ti.com/space-avionics-defense
Power Mgmt	power.ti.com	Transportation and Automotive	www.ti.com/automotive
Microcontrollers	microcontroller.ti.com	Video and Imaging	www.ti.com/video
RFID	www.ti-rfid.com	Wireless	www.ti.com/wireless-apps
RF/IF and ZigBee® Solutions	www.ti.com/lprf	**TI E2E Community Home Page**	e2e.ti.com

Mailing Address: Texas Instruments, Post Office Box 655303, Dallas, Texas 75265

Copyright© 2011 Texas Instruments Incorporated

IMPORTANT NOTICE

Texas Instruments Incorporated and its subsidiaries (TI) reserve the right to make corrections, modifications, enhancements, improvements, and other changes to its products and services at any time and to discontinue any product or service without notice. Customers should obtain the latest relevant information before placing orders and should verify that such information is current and complete. All products are sold subject to TI's terms and conditions of sale supplied at the time of order acknowledgment.

TI warrants performance of its hardware products to the specifications applicable at the time of sale in accordance with TI's standard warranty. Testing and other quality control techniques are used to the extent TI deems necessary to support this warranty. Except where mandated by government requirements, testing of all parameters of each product is not necessarily performed.

TI assumes no liability for applications assistance or customer product design. Customers are responsible for their products and applications using TI components. To minimize the risks associated with customer products and applications, customers should provide adequate design and operating safeguards.

TI does not warrant or represent that any license, either express or implied, is granted under any TI patent right, copyright, mask work right, or other TI intellectual property right relating to any combination, machine, or process in which TI products or services are used. Information published by TI regarding third-party products or services does not constitute a license from TI to use such products or services or a warranty or endorsement thereof. Use of such information may require a license from a third party under the patents or other intellectual property of the third party, or a license from TI under the patents or other intellectual property of TI.

Reproduction of TI information in TI data books or data sheets is permissible only if reproduction is without alteration and is accompanied by all associated warranties, conditions, limitations, and notices. Reproduction of this information with alteration is an unfair and deceptive business practice. TI is not responsible or liable for such altered documentation. Information of third parties may be subject to additional restrictions.

Resale of TI products or services with statements different from or beyond the parameters stated by TI for that product or service voids all express and any implied warranties for the associated TI product or service and is an unfair and deceptive business practice. TI is not responsible or liable for any such statements.

TI products are not authorized for use in safety-critical applications (such as life support) where a failure of the TI product would reasonably be expected to cause severe personal injury or death, unless officers of the parties have executed an agreement specifically governing such use. Buyers represent that they have all necessary expertise in the safety and regulatory ramifications of their applications, and acknowledge and agree that they are solely responsible for all legal, regulatory and safety-related requirements concerning their products and any use of TI products in such safety-critical applications, notwithstanding any applications-related information or support that may be provided by TI. Further, Buyers must fully indemnify TI and its representatives against any damages arising out of the use of TI products in such safety-critical applications.

TI products are neither designed nor intended for use in military/aerospace applications or environments unless the TI products are specifically designated by TI as military-grade or "enhanced plastic." Only products designated by TI as military-grade meet military specifications. Buyers acknowledge and agree that any such use of TI products which TI has not designated as military-grade is solely at the Buyer's risk, and that they are solely responsible for compliance with all legal and regulatory requirements in connection with such use.

TI products are neither designed nor intended for use in automotive applications or environments unless the specific TI products are designated by TI as compliant with ISO/TS 16949 requirements. Buyers acknowledge and agree that, if they use any non-designated products in automotive applications, TI will not be responsible for any failure to meet such requirements.

Following are URLs where you can obtain information on other Texas Instruments products and application solutions:

Products		**Applications**	
Audio	www.ti.com/audio	Communications and Telecom	www.ti.com/communications
Amplifiers	amplifier.ti.com	Computers and Peripherals	www.ti.com/computers
Data Converters	dataconverter.ti.com	Consumer Electronics	www.ti.com/consumer-apps
DLP® Products	www.dlp.com	Energy and Lighting	www.ti.com/energy
DSP	dsp.ti.com	Industrial	www.ti.com/industrial
Clocks and Timers	www.ti.com/clocks	Medical	www.ti.com/medical
Interface	interface.ti.com	Security	www.ti.com/security
Logic	logic.ti.com	Space, Avionics and Defense	www.ti.com/space-avionics-defense
Power Mgmt	power.ti.com	Transportation and Automotive	www.ti.com/automotive
Microcontrollers	microcontroller.ti.com	Video and Imaging	www.ti.com/video
RFID	www.ti-rfid.com		
OMAP Mobile Processors	www.ti.com/omap		
Wireless Connectivity	www.ti.com/wirelessconnectivity		

TI E2E Community Home Page e2e.ti.com

Mailing Address: Texas Instruments, Post Office Box 655303, Dallas, Texas 75265
Copyright © 2011, Texas Instruments Incorporated