300-W STEREO / 600-W MONO PurePath™ HD DIGITAL-INPUT POWER STAGE

Check for Samples: TAS5631

FEATURES

- **PurePath™ HD Enabled Integrated Feedback Provides:**
  - **Signal Bandwidth up to 80 kHz for High-Frequency Content From HD Sources**
  - **Ultralow 0.03% THD at 1 W Into 4 Ω**
  - **Flat THD at All Frequencies for Natural Sound**
  - **80-dB PSRR (BTL, No Input Signal)**
  - **>100-dB (A-weighted) SNR**
  - **Click- and Pop-Free Start-Up**
- **Multiple Configurations Possible on the Same PCB With Stuffing Options:**
  - **Mono Parallel Bridge-Tied Load (PBTL)**
  - **Stereo Bridge-Tied Load (BTL)**
  - **2.1 Single-Ended Stereo Pair and Bridge-Tied Load Subwoofer**
  - **Quad Single-Ended Outputs**
- **Total Output Power at 10% THD+N**
  - **600 W in Mono PBTL Configuration**
  - **300 W per Channel in Stereo BTL Configuration**
  - **145 W per Channel in Quad Single-Ended Configuration**
- **High-Efficiency Power Stage (>88%) With 60-mΩ Output MOSFETs**
- **Two Thermally Enhanced Package Options:**
  - **PHD (64-Pin QFP)**
  - **DKD (44-Pin PSOP3)**
- **Self-Protection Design (Including Undervoltage, Overtemperature, Clipping, and Short-Circuit Protection) With Error Reporting**
- **EMI Compliant When Used With Recommended System Design**

APPLICATIONS

- **Mini Combo System**
- **AV Receivers**
- **DVD Receivers**
- **Active Speakers**

DESCRIPTION

The TAS5631 is a high-performance PWM input class-D amplifier with integrated closed-loop feedback technology (known as PurePath HD technology) with the ability to drive up to 300 W [(1)] stereo into 4-Ω to 8-Ω speakers from a single 50-V supply.

PurePath HD technology enables traditional AB-amplifier performance (<0.03% THD) levels while providing the power efficiency of traditional class-D amplifiers.

Unlike traditional class-D amplifiers, the distortion curve only increases once the output levels move into clipping.

PurePath HD technology enables lower idle losses, making the device even more efficient.

Note 1. Achievable output power levels are dependent on the thermal configuration of the target application. A high-performance thermal interface material between the package exposed heat slug and the heat sink should be used to achieve high output-power levels.

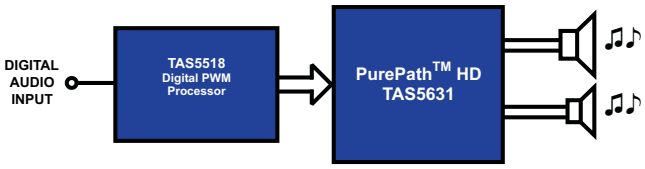

Please be aware that an important notice concerning availability, standard warranty, and use in critical applications of Texas Instruments semiconductor products and disclaimers thereto appears at the end of this data sheet.

PurePath HD is a trademark of Texas Instruments.
All other trademarks are the property of their respective owners.

PRODUCTION DATA information is current as of publication date. Products conform to specifications per the terms of the Texas Instruments standard warranty. Production processing does not necessarily include testing of all parameters.

Copyright © 2009–2010, Texas Instruments Incorporated

These devices have limited built-in ESD protection. The leads should be shorted together or the device placed in conductive foam during storage or handling to prevent electrostatic damage to the MOS gates.

DEVICE INFORMATION

Terminal Assignment

Both package types contains a heat slug that is located on the top side of the device for convenient thermal coupling to the heat sink.

PHD PACKAGE (TOP VIEW)

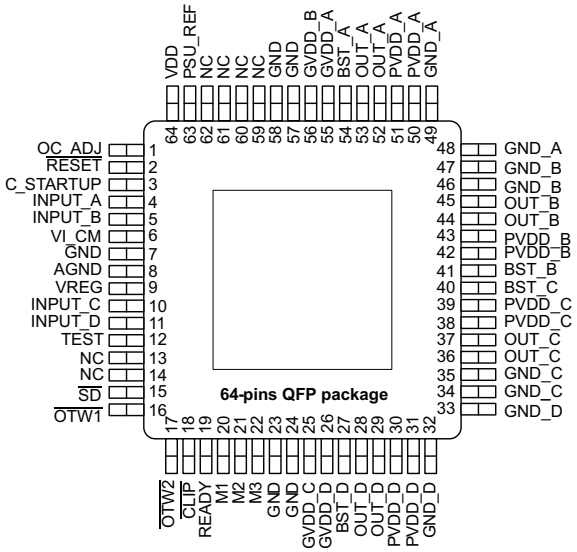

DKD PACKAGE (TOP VIEW)

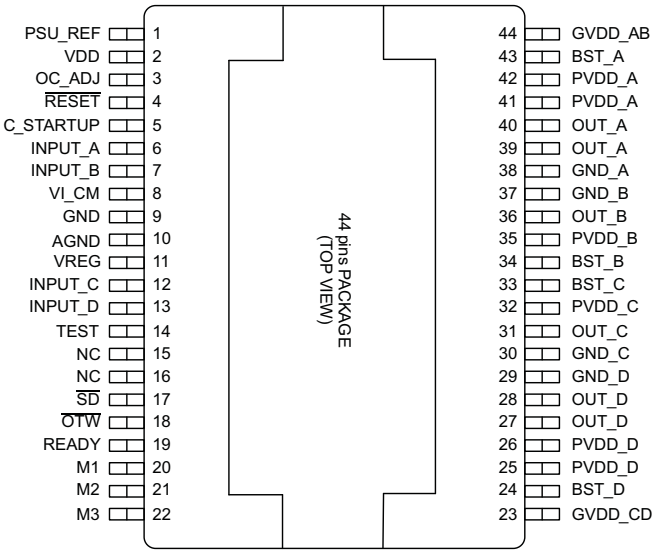

PIN ONE LOCATION PHD PACKAGE

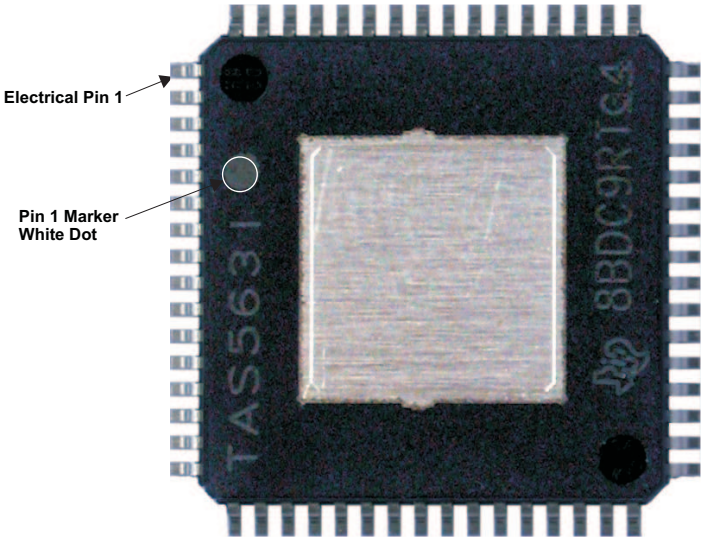

Copyright © 2009–2010, Texas Instruments Incorporated

MODE SELECTION PINS

MODE PINS			PWM INPUT[1]	OUTPUT CONFIGURATION	DESCRIPTION		
M3	M2	M1					
0	0	0	2N	2 × BTL	AD mode		
0	0	1	—	—	Reserved		
0	1	0	2N	2 × BTL	BD mode		
0	1	1	1N	1 × BTL +2 × SE	AD mode		
1	0	0	1N	4 × SE	AD mode		
1	0	1	2N 1N	1 × PBTL	INPUT_C[2]	INPUT_D[2]	
					0	0	AD mode
					1	0	BD mode
1	1	0	Reserved				
1	1	1					

(1) The 1N and 2N naming convention is used to indicate the number of PWM lines to the power stage per channel in a specific mode.
(2) INPUT_C and INPUT_D are used to select between a subset of AD and BD mode operations in PBTL mode.

PACKAGE HEAT DISSIPATION RATINGS[1]

PARAMETER	TAS5631PHD	TAS5631DKD
$R_{\theta JC}$ (°C/W) – 2 BTL or 4 SE channels	2.63	14
$R_{\theta JC}$ (°C/W) – 1 BTL or 2 SE channel(s)	4.13	2.04
$R_{\theta JC}$ (°C/W) – 1 SE channel	6.45	3.45
Pad area [2]	64 mm^2	80 mm^2

(1) $R_{\theta JC}$ is junction-to-case; $R_{\theta CH}$ is case-to-heatsink.
(2) $R_{\theta CH}$ is an important consideration. Assume a 2-mil (0.051-mm) thickness of thermal grease with a thermal conductivity of 2.5 W/mK between the pad area and the heat sink and both channels active. The $R_{\theta CH}$ with this condition is 1.1°C/W for the PHD package and 0.44°C/W for the DKD package.

Table 1. ORDERING INFORMATION[1]

T_A	PACKAGE	DESCRIPTION
0°C–70°C	TAS5631PHD	64-pin HTQFP
0°C–70°C	TAS5631DKD	44-pin PSOP3

(1) For the most current package and ordering information, see the Package Option Addendum at the end of this document, or see the TI Web site at www.ti.com.

Copyright © 2009–2010, Texas Instruments Incorporated

ABSOLUTE MAXIMUM RATINGS

over operating free-air temperature range unless otherwise noted [1]

TAS5631			UNIT
VDD to AGND		–0.3 to 13.2	V
GVDD to AGND		–0.3 to 13.2	V
PVDD_X to GND_X[2]		–0.3 to 69	V
OUT_X to GND_X[2]		–0.3 to 69	V
BST_X to GND_X[2]		–0.3 to 82.2	V
BST_X to GVDD_X[2]		–0.3 to 69	V
VREG to AGND		–0.3 to 4.2	V
GND_X to GND		–0.3 to 0.3	V
GND_X to AGND		–0.3 to 0.3	V
GND to AGND		–0.3 to 0.3	V
INPUT_X, OC_ADJ, M1, M2, M3, OSC_IO+, OSC_IO–, FREQ_ADJ, VI_CM, C_STARTUP, PSU_REF to AGND		–0.3 to 4.2	V
$\overline{\text{RESET}}$, $\overline{\text{SD}}$, $\overline{\text{OTW1}}$, $\overline{\text{OTW2}}$, $\overline{\text{CLIP}}$, $\overline{\text{READY}}$ to AGND		–0.3 to 7	V
Maximum continuous sink current ($\overline{\text{SD}}$, $\overline{\text{OTW1}}$, $\overline{\text{OTW2}}$, $\overline{\text{CLIP}}$, $\overline{\text{READY}}$)		9	mA
Maximum operating junction temperature range, T_J		0 to 150	°C
Storage temperature, T_{stg}		–40 to 150	°C
Electrostatic discharge	Human-body model[3] (all pins)	±2	kV
	Charged-device model[3] (all pins)	±500	V

(1) Stresses beyond those listed under *Absolute Maximum Ratings* may cause permanent damage to the device. These are stress ratings only, and functional operation of the device at these or any other conditions beyond those indicated under *Recommended Operating Conditions* is not implied. Exposure to absolute-maximum-rated conditions for extended periods may affect device reliability.
(2) These voltages represents the dc voltage + peak ac waveform measured at the terminal of the device in all conditions.
(3) Failure to follow good anti-static ESD handling during manufacture and rework contributes to device malfunction. Make sure the operators handling the device are adequately grounded through the use of ground straps or alternative ESD protection.

RECOMMENDED OPERATING CONDITIONS

over operating free-air temperature range (unless otherwise noted)

			MIN	NOM	MAX	UNIT
PVDD_x	Half-bridge supply	DC supply voltage	25	50	52.5	V
GVDD_x	Supply for logic regulators and gate-drive circuitry	DC supply voltage	10.8	12	13.2	V
VDD	Digital regulator supply voltage	DC supply voltage	10.8	12	13.2	V
R_L(BTL)	Load impedance	Output filter according to schematics in the application information section.	3.5	4		Ω
R_L(SE)			1.8	2		
R_L(PBTL)			1.6	2		
L_{OUTPUT}(BTL)	Output filter inductance	Minimum output inductance at I_{OC}	7	10		µH
L_{OUTPUT}(SE)			7	15		
L_{OUTPUT}(PBTL)			7	10		
f_{PWM}	PWM frame rate		352	384	500	kHz
T_J	Junction temperature		0		150	°C

TERMINAL FUNCTIONS

TERMINAL			Function[1]	DESCRIPTION
NAME	PHD NO.	DKD NO.		
AGND	8	10	P	Analog ground
BST_A	54	43	P	HS bootstrap supply (BST); external 0.033-µF capacitor to OUT_A required
BST_B	41	34	P	HS bootstrap supply (BST); external 0.033-µF capacitor to OUT_B required

(1) I = Input, O = Output, P = Power

Copyright © 2009–2010, Texas Instruments Incorporated

TERMINAL FUNCTIONS (continued)

TERMINAL			Function[1]	DESCRIPTION
NAME	PHD NO.	DKD NO.		
BST_C	40	33	P	HS bootstrap supply (BST); external 0.033-µF capacitor to OUT_C required
BST_D	27	24	P	HS bootstrap supply (BST); external 0.033-µF capacitor to OUT_D required
$\overline{\text{CLIP}}$	18	—	O	Clipping warning; open drain; active-low
C_STARTUP	3	5	O	Start-up ramp requires a charging capacitor of 4.7 nF to AGND.
TEST	12	14	I	Connect to VREG node
GND	7, 23, 24, 57, 58	9	P	Ground
GND_A	48, 49	38	P	Power ground for half-bridge A
GND_B	46, 47	37	P	Power ground for half-bridge B
GND_C	34, 35	30	P	Power ground for half-bridge C
GND_D	32, 33	29	P	Power ground for half-bridge D
GVDD_A	55	—	P	Gate drive voltage supply requires 0.1-µF capacitor to AGND.
GVDD_B	56	—	P	Gate drive voltage supply requires 0.1-µF capacitor to AGND.
GVDD_C	25	—	P	Gate drive voltage supply requires 0.1-µF capacitor to AGND.
GVDD_D	26	—	P	Gate drive voltage supply requires 0.1-µF capacitor to AGND.
GVDD_AB	—	44	P	Gate drive voltage supply requires 0.22-µF capacitor to AGND.
GVDD_CD	—	23	P	Gate drive voltage supply requires 0.22-µF capacitor to AGND.
INPUT_A	4	6	I	Input signal for half-bridge A
INPUT_B	5	7	I	Input signal for half-bridge B
INPUT_C	10	12	I	Input signal for half-bridge C
INPUT_D	11	13	I	Input signal for half-bridge D
M1	20	20	I	Mode selection
M2	21	21	I	Mode selection
M3	22	22	I	Mode selection
NC	59–62	–	—	No connect; pins may be grounded.
NC	13, 14	15, 16	—	No connect; pins may be grounded.
OC_ADJ	1	3	O	Analog overcurrent programming pin requires resistor to ground.
$\overline{\text{OTW}}$	—	18	O	Overtemperature warning signal, open-drain, active-low
$\overline{\text{OTW1}}$	16	—	O	Overtemperature warning signal, open-drain, active-low
$\overline{\text{OTW2}}$	17	—	O	Overtemperature warning signal, open-drain, active-low
OUT_A	52, 53	39, 40	O	Output, half-bridge A
OUT_B	44, 45	36	O	Output, half-bridge B
OUT_C	36, 37	31	O	Output, half-bridge C
OUT_D	28, 29	27, 28	O	Output, half-bridge D
PSU_REF	63	1	P	PSU reference requires close decoupling of 4.7 µF to AGND.
PVDD_A	50, 51	41, 42	P	Power-supply input for half-bridge A requires close decoupling of 0.01-µF capacitor in parallel with 1-µF capacitor to GND_A.
PVDD_B	42, 43	35	P	Power-supply input for half-bridge B requires close decoupling of 0.01-µF capacitor in parallel with 1-µF capacitor to GND_B.
PVDD_C	38, 39	32	P	Power-supply input for half-bridge C requires close decoupling of 0.01-µF capacitor in parallel with 1-µF capacitor to GND_C.
PVDD_D	30, 31	25, 26	P	Power-supply input for half-bridge D requires close decoupling of 0.01-µF capacitor in parallel with 1-µF capacitor to GND_D.
READY	19	19	O	Normal operation; open-drain; active-high
$\overline{\text{RESET}}$	2	4	I	Device reset input; active-low
$\overline{\text{SD}}$	15	17	O	Shutdown signal; open-drain, active-low
VDD	64	2	P	Power supply for digital voltage regulator requires a 47-µF capacitor in parallel with a 0.1-µF capacitor to GND for decoupling.
VI_CM	6	8	O	Analog comparator reference node requires close decoupling of 4.7 µF to AGND.
VREG	9	11	P	Digital regulator supply filter pin requires 0.1-µF capacitor to AGND.

Copyright © 2009–2010, Texas Instruments Incorporated

TYPICAL SYSTEM BLOCK DIAGRAM

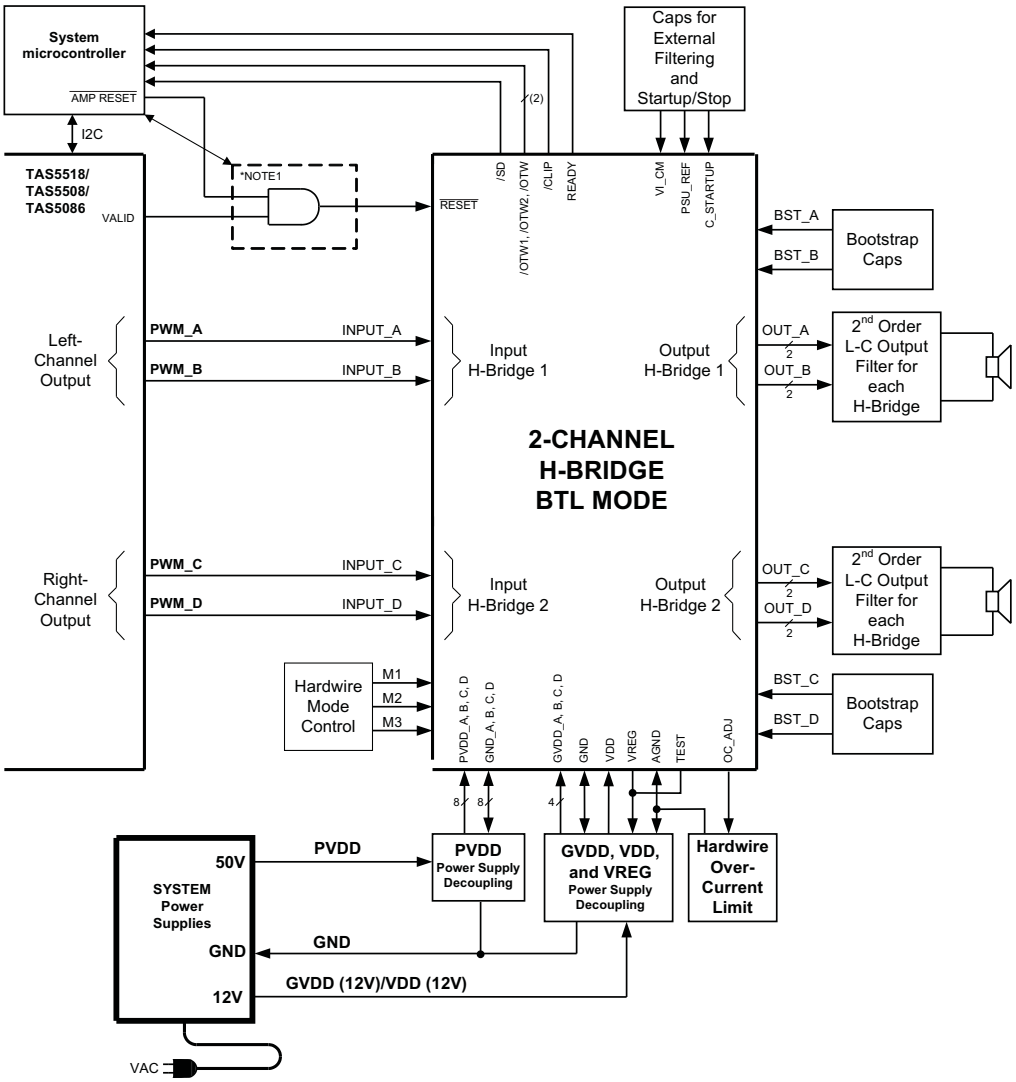

(1) Logic AND is inside or outside the microcontroller.

Copyright © 2009–2010, Texas Instruments Incorporated

FUNCTIONAL BLOCK DIAGRAM

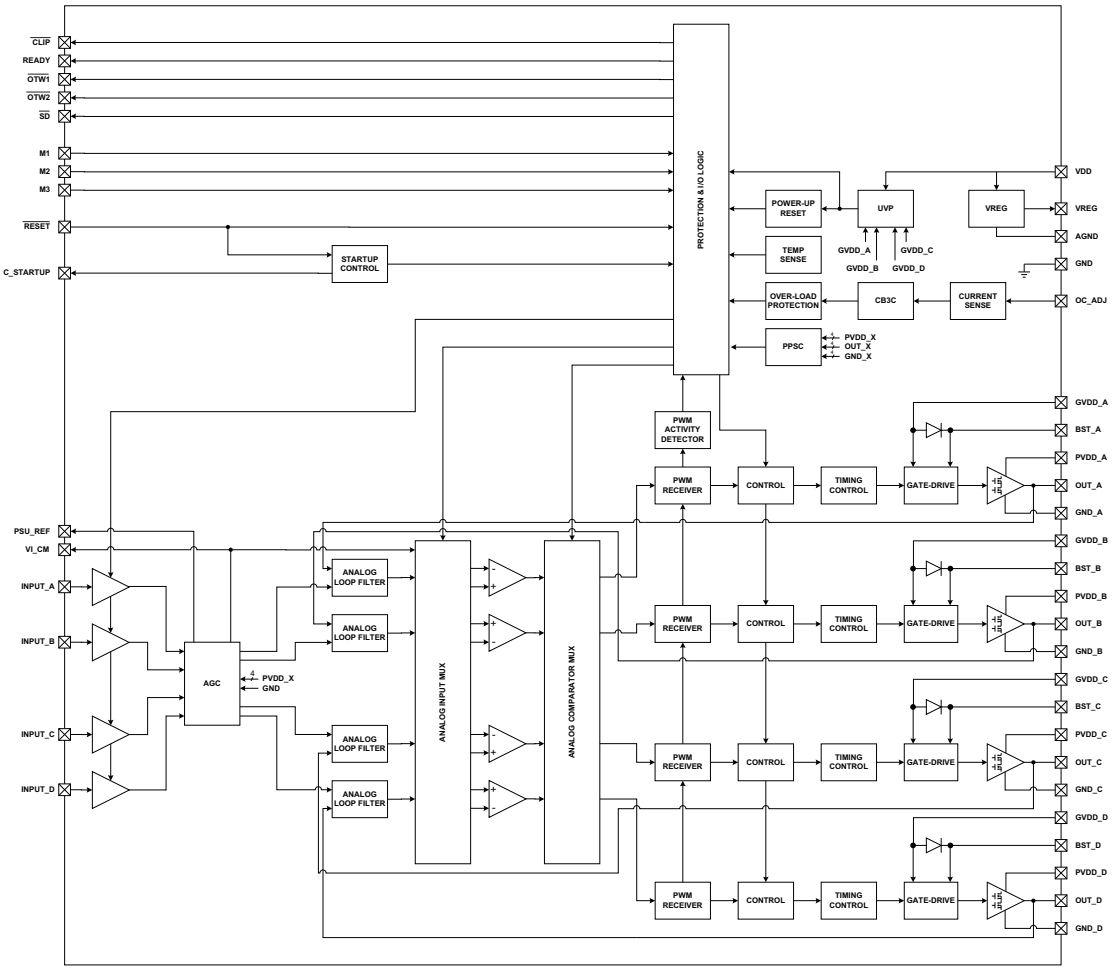

AUDIO CHARACTERISTICS (BTL)

Audio performance is recorded as a chipset consisting of a TAS5518 PWM processor (modulation index limited to 97.7%) and a TAS5631 power stage. PCB and system configurations are in accordance with recommended guidelines. Audio frequency = 1 kHz, PVDD_X = 50 V, GVDD_X = 12 V, R_L = 4 Ω, f_S = 384 kHz, R_{OC} = 22 kΩ, T_C = 75°C; output filter: L_{DEM} = 7 μH, C_{DEM} = 680 nF, MODE = 000, unless otherwise noted.

PARAMETER		TEST CONDITIONS	MIN	TYP	MAX	UNIT
P_O	Power output per channel	R_L = 4 Ω, 10% THD+N, clipped input signal		300		W
		R_L = 6 Ω, 10% THD+N, clipped input signal		210		
		R_L = 8 Ω, 10% THD+N, clipped input signal		160		
		R_L = 4 Ω, 1% THD+N, unclipped input signal		240		
		R_L = 6 Ω, 1% THD+N, unclipped input signal		160		
		R_L = 8 Ω, 1% THD+N, unclipped input signal		125		
THD+N	Total harmonic distortion + noise	1 W		0.03%		
V_n	Output integrated noise	A-weighted, TAS5518 modulator		180		μV
$\|V_{OS}\|$	Output offset voltage	No signal		40	150	mV
SNR	Signal-to-noise ratio(1)	A-weighted, TAS5518 modulator		103		dB
DNR	Dynamic range	A-weighted, input level –60 dBFS using TAS5518 modulator		103		dB
P_{idle}	Power dissipation due to idle losses (I_{PVDD_X})	P_O = 0, four channels switching(2)		3.9		W

(1) SNR is calculated relative to 1% THD-N output level.
(2) Actual system idle losses also are affected by core losses of output inductors.

AUDIO SPECIFICATION (Single-Ended Output)

Audio performance is recorded as a chipset consisting of a TAS5086 PWM processor (modulation index limited to 97.7%) and a TAS5631 power stage. PCB and system configurations are in accordance with recommended guidelines. Audio frequency = 1 kHz, PVDD_X = 50 V, GVDD_X = 12 V, R_L = 2 Ω, f_S = 384 kHz, R_{OC} = 22 kΩ, T_C = 75°C; output filter: L_{DEM} = 7 μH, C_{DEM} = 470 nF, MODE = 100, unless otherwise noted.

PARAMETER		TEST CONDITIONS	MIN	TYP	MAX	UNIT
P_O	Power output per channel	R_L = 2 Ω, 10%, THD+N, clipped input signal		145		W
		R_L = 3 Ω, 10%, THD+N, clipped input signal		100		
		R_L = 4 Ω, 10%, THD+N, clipped input signal		75		
		R_L = 2 Ω, 1% THD+N, unclipped input signal		110		
		R_L = 3 Ω, 1% THD+N, unclipped input signal		75		
		R_L = 4 Ω, 1% THD+N, unclipped input signal		55		
THD+N	Total harmonic distortion + noise	1 W		0.04%		
V_n	Output integrated noise	A-weighted, TAS5086 modulator		140		μV
SNR	Signal-to-noise ratio(1)	A-weighted, TAS5086 modulator		100		dB
DNR	Dynamic range	A-weighted, input level –60 dBFS using TAS5086 modulator		100		dB
P_{idle}	Power dissipation due to idle losses (I_{PVDD_X})	P_O = 0, 4 channels switching(2)		3		W

(1) SNR is calculated relative to 1% THD-N output level.
(2) Actual system idle losses are affected by core losses of output inductors.

Copyright © 2009–2010, Texas Instruments Incorporated

AUDIO SPECIFICATION (PBTL)

Audio performance is recorded as a chipset consisting of a TAS5518 PWM processor (modulation index limited to 97.7%) and a TAS5631 power stage. PCB and system configurations are in accordance with recommended guidelines. Audio frequency = 1 kHz, PVDD_X = 50 V, GVDD_X = 12 V, R_L = 2 Ω, f_S = 384 kHz, R_{OC} = 22 kΩ, T_C = 75°C; output filter: L_{DEM} = 7 μH, C_{DEM} = 1 μF, MODE = 101-00, unless otherwise noted.

PARAMETER		TEST CONDITIONS	MIN	TYP	MAX	UNIT
P_O	Power output per channel	R_L = 2 Ω, 10%, THD+N, clipped input signal		600		W
		R_L = 3 Ω, 10%, THD+N, clipped input signal		400		
		R_L = 4 Ω, 10%, THD+N, unclipped input signal		300		
		R_L = 2 Ω, 1% THD+N, unclipped input signal		480		
		R_L = 3 Ω, 1% THD+N, unclipped input signal		310		
		R_L = 4 Ω, 1% THD+N, unclipped input signal		230		
THD+N	Total harmonic distortion + noise	1 W		0.03%		
V_n	Output integrated noise	A-weighted, TAS5518 modulator		170		μV
SNR	Signal-to-noise ratio(1)	A-weighted, TAS5518 modulator		103		dB
DNR	Dynamic range	A-weighted, input level –60 dBFS using TAS5518 modulator		103		dB
P_{idle}	Power dissipation due to idle losses (I_{PVDD_X})	P_O = 0, 4 channels switching(2)		3.7		W

(1) SNR is calculated relative to 1% THD-N output level.
(2) Actual system idle losses are affected by core losses of output inductors.

ELECTRICAL CHARACTERISTICS

PVDD_X = 50V, GVDD_X = 12 V, VDD = 12V, T_C (case temperature) = 75°C, f_S = 384 kHz, unless otherwise specified.

PARAMETER		TEST CONDITIONS	MIN	TYP	MAX	UNIT
INTERNAL VOLTAGE REGULATOR AND CURRENT CONSUMPTION						
VREG	Voltage regulator, only used as reference node, VREG	VDD = 12 V	3	3.3	3.6	V
VI_CM	Analog comparator reference node, VI_CM		1.5	1.75	1.9	V
I_{VDD}	VDD supply current	Operating, 50% duty cycle		22.5		mA
		Idle, reset mode		22.5		
I_{GVDD_x}	Gate-supply current per half-bridge	50% duty cycle		12.5		mA
		Reset mode		1.5		
I_{PVDD_x}	Half-bridge idle current	50% duty cycle without output filter or load		19.5		mA
		Reset mode, no switching		750		μA
OUTPUT-STAGE MOSFETs						
$R_{DS(on)}$	Drain-to-source resistance, low side (LS)	T_J = 25°C, excludes metallization resistance, GVDD = 12 V		60	100	mΩ
	Drain-to-source resistance, high side (HS)			60	100	mΩ

ELECTRICAL CHARACTERISTICS (continued)

PVDD_X = 50V, GVDD_X = 12 V, VDD = 12V, T_C (case temperature) = 75°C, f_S = 384 kHz, unless otherwise specified.

PARAMETER		TEST CONDITIONS	MIN	TYP	MAX	UNIT
I/O PROTECTION						
$V_{uvp,G}$	Undervoltage protection limit, GVDD_X			10		V
$V_{uvp,hyst}$ (1)				0.6		V
OTW1 (1)	Overtemperature warning 1		95	100	105	°C
OTW2 (1)	Overtemperature warning 2		115	125	135	°C
OTW_{hyst} (1)	Temperature drop needed below OTW temperature for $\overline{OTW}$ to be inactive after $\overline{OTW}$ event			25		°C
OTE (1)	Overtemperature error		145	155	165	°C
	OTE-OTW differential			30		°C
OTE_{HYST} (1)	A reset must occur for $\overline{SD}$ to be released following an OTE event			25		°C
OLPC	Overload protection counter	f_{PWM} = 384 kHz		2.6		ms
I_{OC}	Overcurrent limit response	Resistor – programmable, nominal peak current in 1-Ω load, 64-pin QFP package (PHD) R_{OCP} = 22 kΩ		19		A
		Resistor – programmable, nominal peak current in 1-Ω load, 44-pin PSOP3 package (DKD) R_{OCP} = 24 kΩ		19		A
	Overcurrent response time, latched	Resistor – programmable, nominal peak current in 1-Ω load, R_{OCP} = 47 kΩ		19		A
I_{OCT}	Overcurrent response time	Time from application of short condition to Hi-Z of affected half-bridge		150		ns
I_{PD}	Internal pulldown resistor at output of each half-bridge	Connected when $\overline{RESET}$ is active to provide bootstrap charge. Not used in SE mode.		3		mA
STATIC DIGITAL SPECIFICATIONS						
V_{IH}	High-level input voltage	INPUT_X, M1, M2, M3, RESET	1.9			V
V_{IL}	Low-level input voltage				1.45	V
I_{lkg}	Input leakage current				100	µA
OTW/SHUTDOWN (SD)						
R_{INT_PU}	Internal pullup resistance, $\overline{OTW1}$ to VREG, $\overline{OTW2}$ to VREG, $\overline{SD}$ to VREG		20	26	33	kΩ
V_{OH}	High-level output voltage	Internal pullup resistor	3	3.3	3.6	V
		External pullup of 4.7 kΩ to 5 V	4.5		5	
V_{OL}	Low-level output voltage	I_O = 4 mA		200	500	mV
FANOUT	Device fanout $\overline{OTW1}$, $\overline{OTW2}$, $\overline{SD}$, $\overline{CLIP}$, $\overline{READY}$	No external pullup		30		devices

(1) Specified by design

Copyright © 2009–2010, Texas Instruments Incorporated

TYPICAL CHARACTERISTICS, BTL CONFIGURATION

TOTAL HARMONIC DISTORTION + NOISE vs OUTPUT POWER

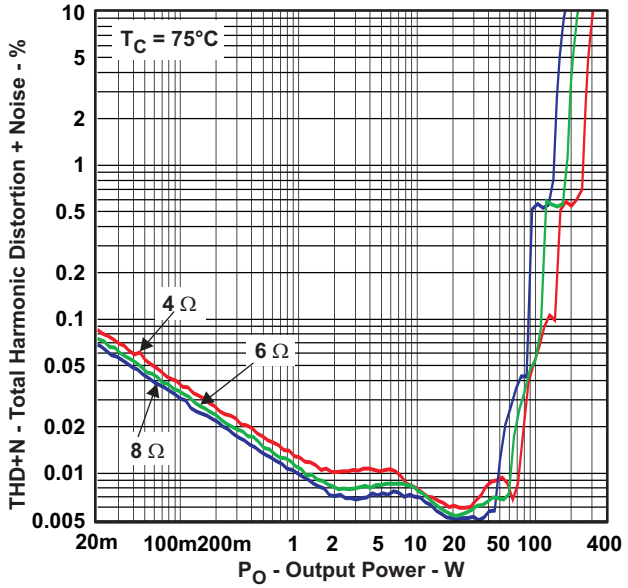

Figure 1.

OUTPUT POWER vs SUPPLY VOLTAGE

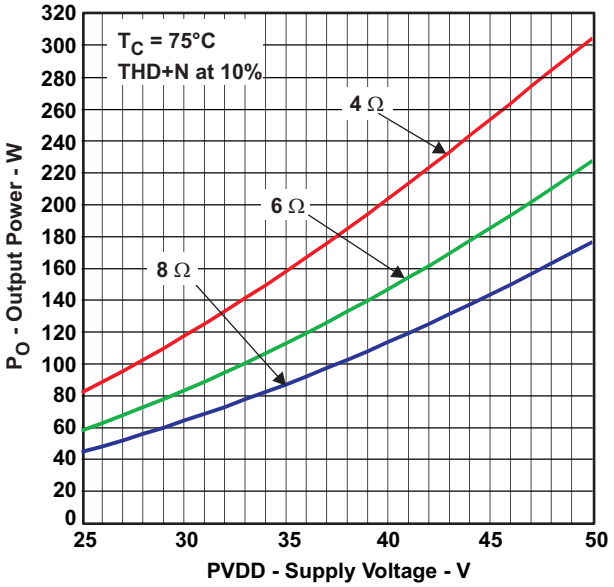

Figure 2.

UNCLIPPED OUTPUT POWER vs SUPPLY VOLTAGE

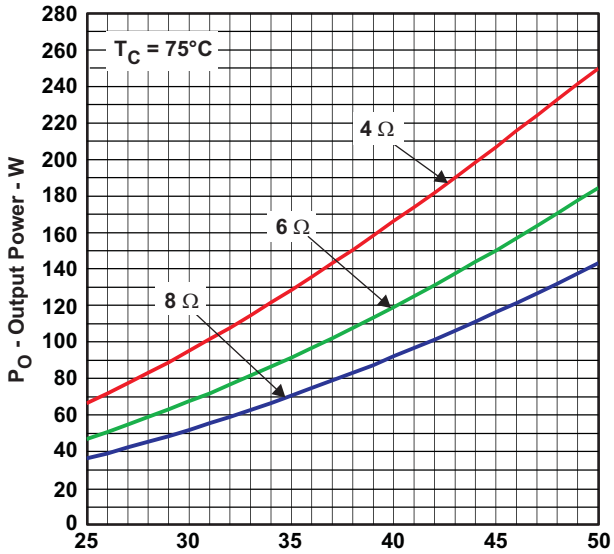

Figure 3.

SYSTEM EFFICIENCY vs OUTPUT POWER

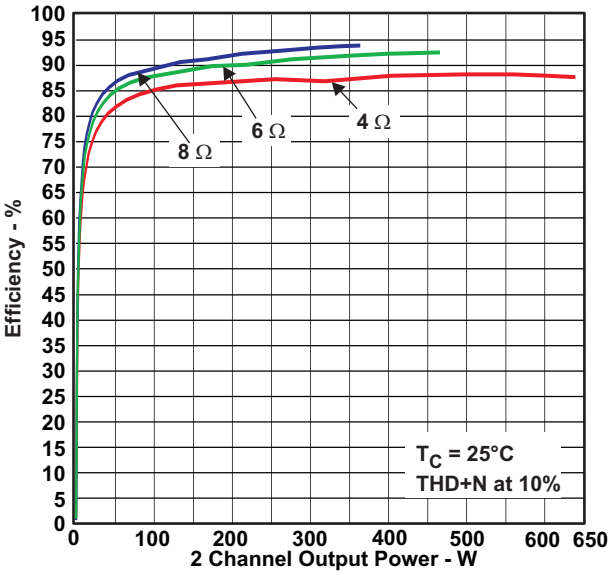

Figure 4.

TYPICAL CHARACTERISTICS, BTL CONFIGURATION (continued)

SYSTEMS POWER LOSS vs OUTPUT POWER

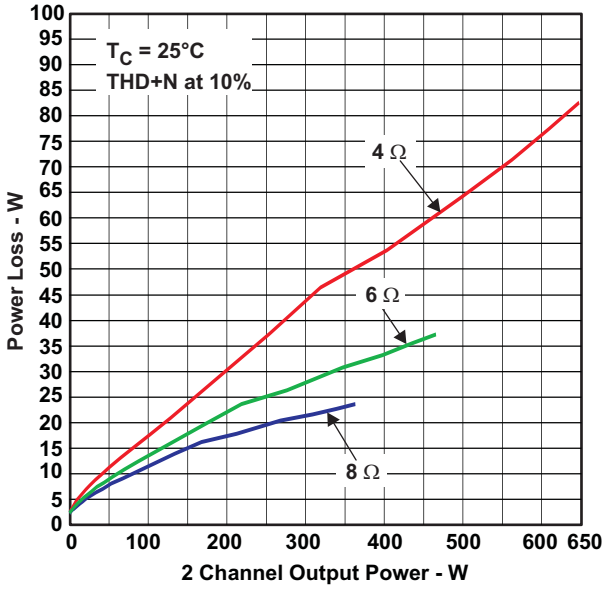

Figure 5.

OUTPUT POWER vs CASE TEMPERATURE

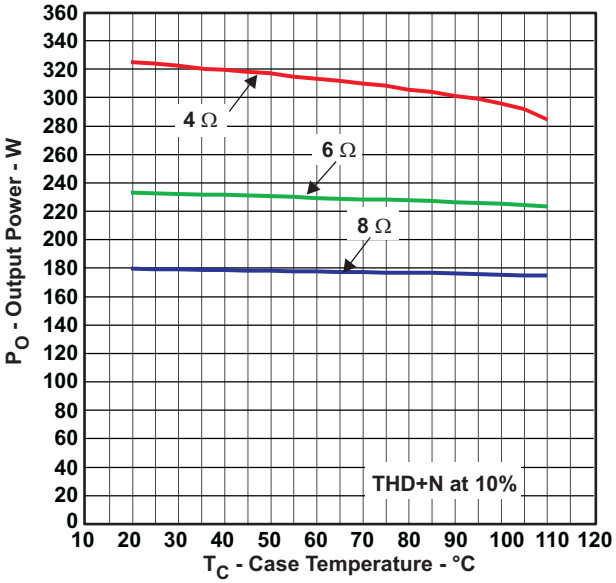

Figure 6.

NOISE AMPLITUDE vs FREQUENCY

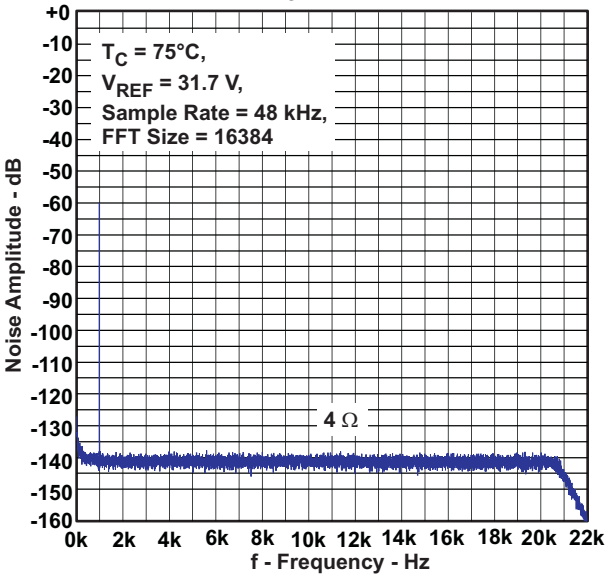

Figure 7.

Copyright © 2009–2010, Texas Instruments Incorporated

TYPICAL CHARACTERISTICS, SE CONFIGURATION

TOTAL HARMONIC dISTORTION + NOISE vs OUTPUT POWER

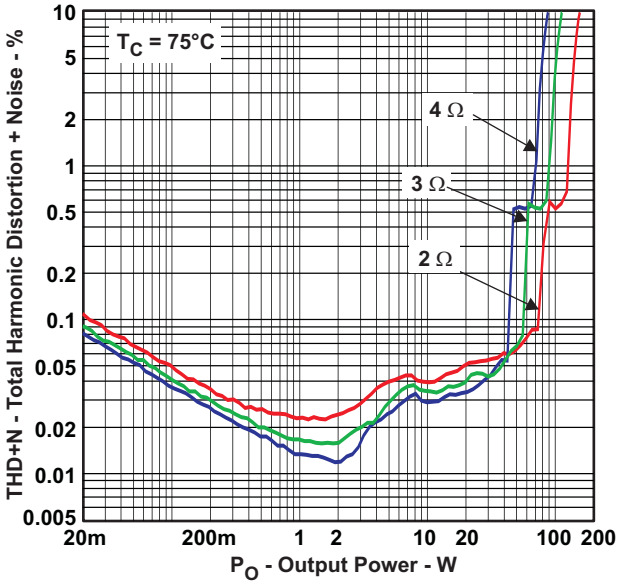

Figure 8.

OUTPUT POWER vs SUPPLY VOLTAGE

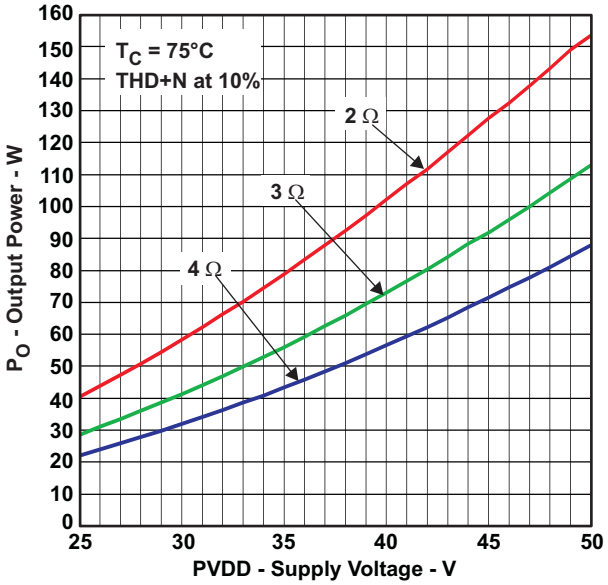

Figure 9.

OUTPUT POWER vs CASE TEMPERATURE

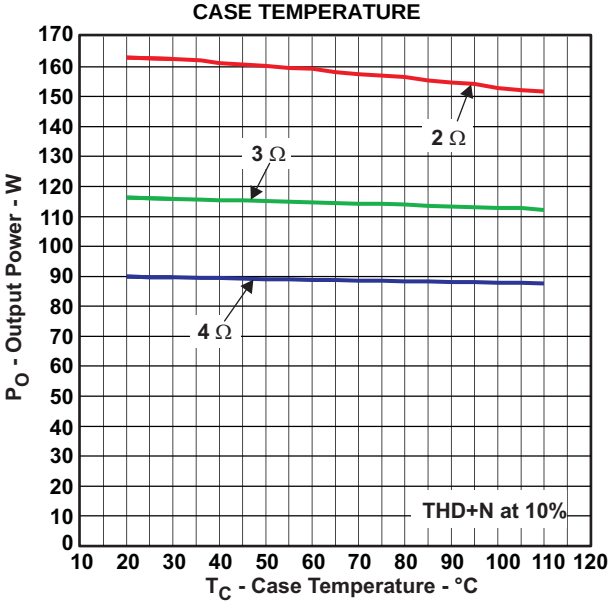

Figure 10.

TYPICAL CHARACTERISTICS, PBTL CONFIGURATION

TOTAL HARMONIC DISTORTION + NOISE vs OUTPUT POWER

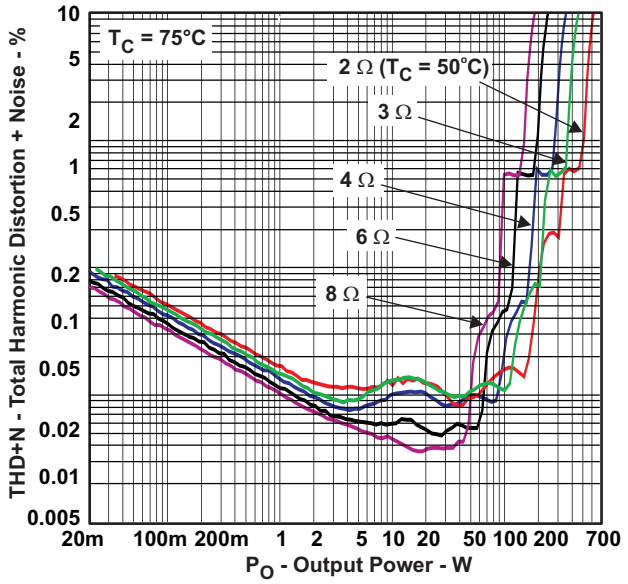

Figure 11.

OUTPUT POWER vs SUPPLY VOLTAGE

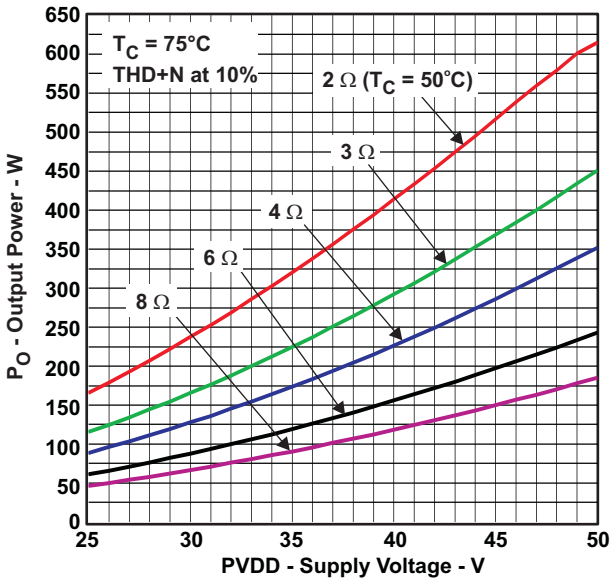

Figure 12.

OUTPUT POWER vs CASE TEMPERATURE

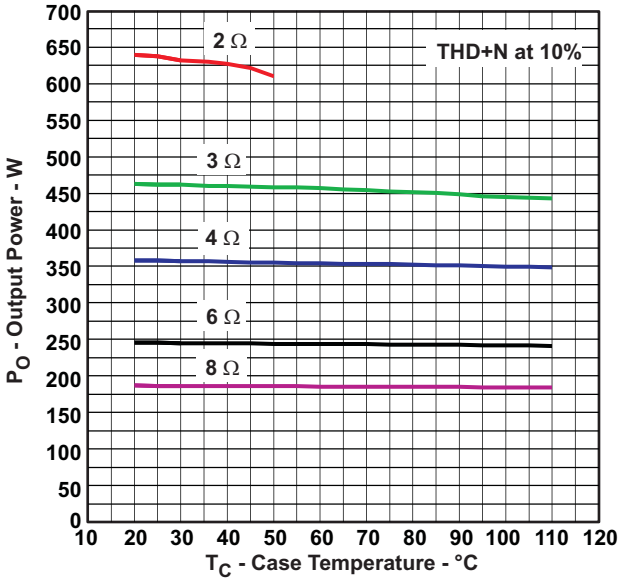

Figure 13.

Copyright © 2009–2010, Texas Instruments Incorporated

APPLICATION INFORMATION

PCB MATERIAL RECOMMENDATION

FR-4 2-oz. (70 μm) glass epoxy material is recommended for use with the TAS5631. The use of this material can provide for higher power output, improved thermal performance, and better EMI margin (due to lower PCB trace inductance).

PVDD CAPACITOR RECOMMENDATION

The large capacitors used in conjunction with each full bridge are referred to as the PVDD capacitors. These capacitors should be selected for proper voltage margin and adequate capacitance to support the power requirements. In practice, with a well-designed system power supply, 1000 μF, 63 V support more applications. The PVDD capacitors should be the low-ESR type because they are used in a circuit associated with high-speed switching.

DECOUPLING CAPACITOR RECOMMENDATION

To design an amplifier that has robust performance, passes regulatory requirements, and exhibits good audio performance, good-quality decoupling capacitors should be used. In practice, X7R should be used in this application.

The voltage of the decoupling capacitors should be selected in accordance with good design practices. Temperature, ripple current, and voltage overshoot must be considered. This fact is particularly true in the selection of the 0.1-μF capacitor that is placed on the power supply to each half-bridge. It must withstand the voltage overshoot of the PWM switching, the heat generated by the amplifier during high power output, and the ripple current created by high power output. A minimum voltage rating of 63 V is required for use with a 50-V power supply.

SYSTEM DESIGN RECOMMENDATIONS

The following schematics and PCB layouts illustrate *best practices* in the use of the TAS5631.

Copyright © 2009–2010, Texas Instruments Incorporated

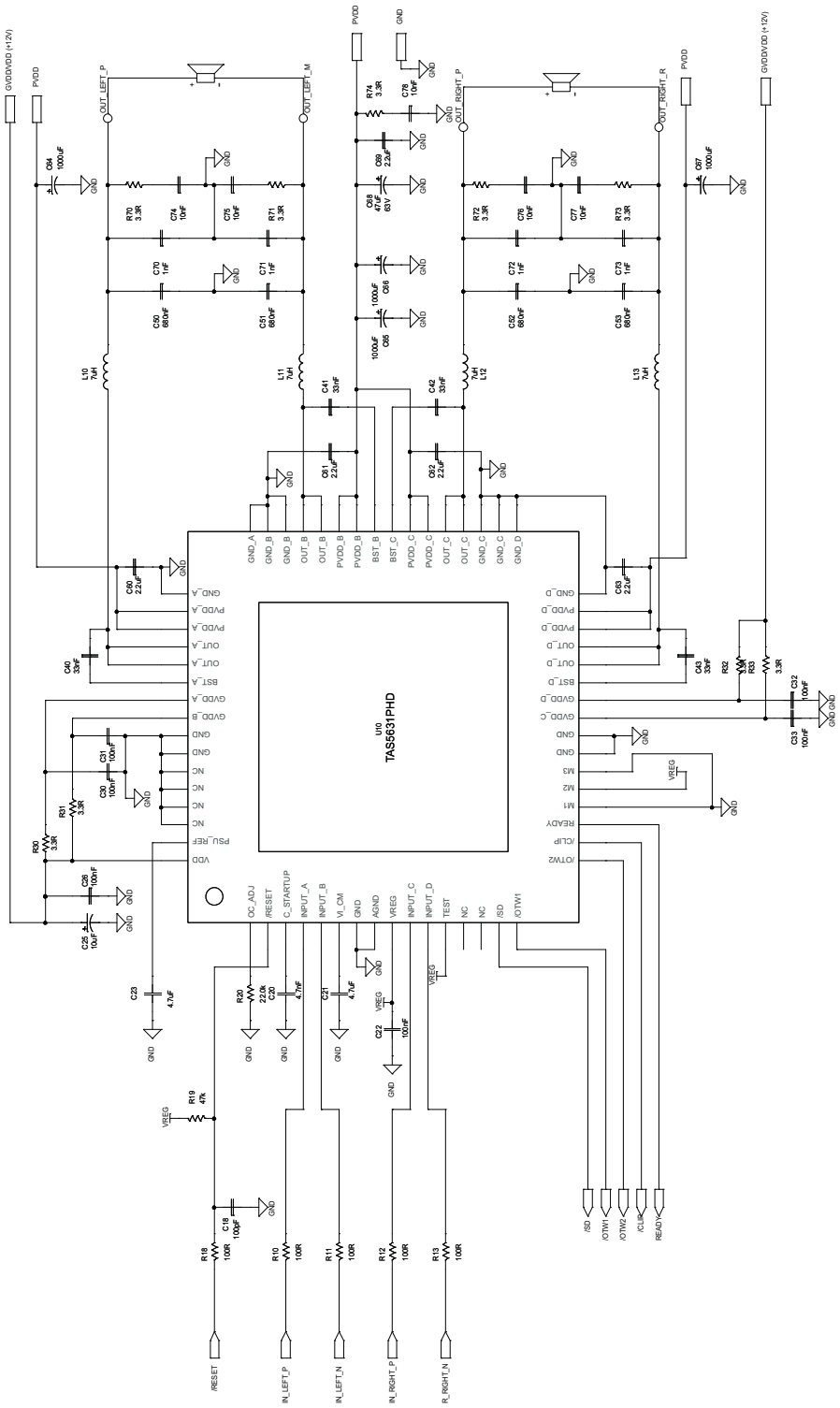

Figure 14. Typical Differential (2N) BTL Application With BD Modulation Filters

Copyright © 2009–2010, Texas Instruments Incorporated

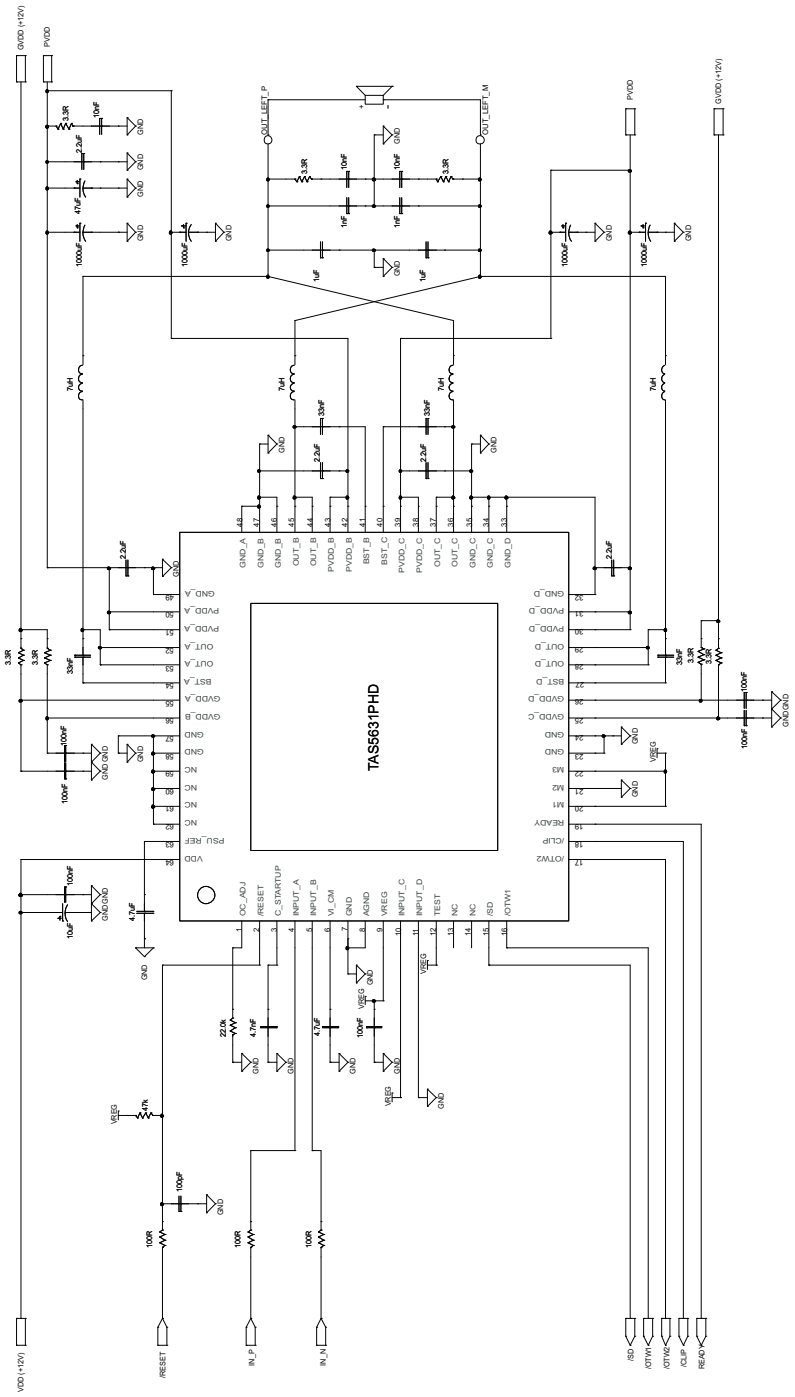

Figure 15. Typical (2N) PBTL Application With AD Modulation Filters

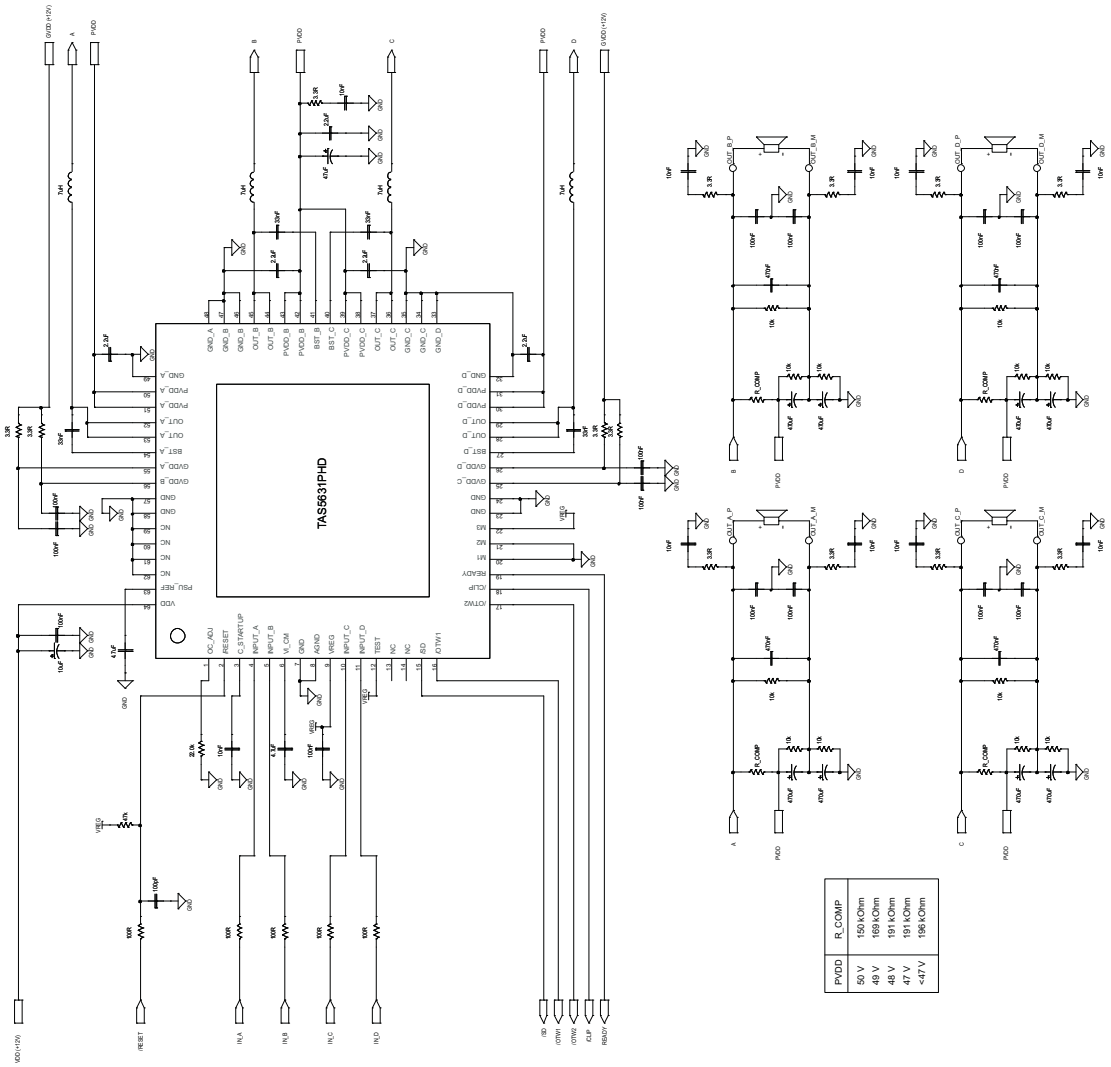

Figure 16. Typical SE Application

Copyright © 2009–2010, Texas Instruments Incorporated

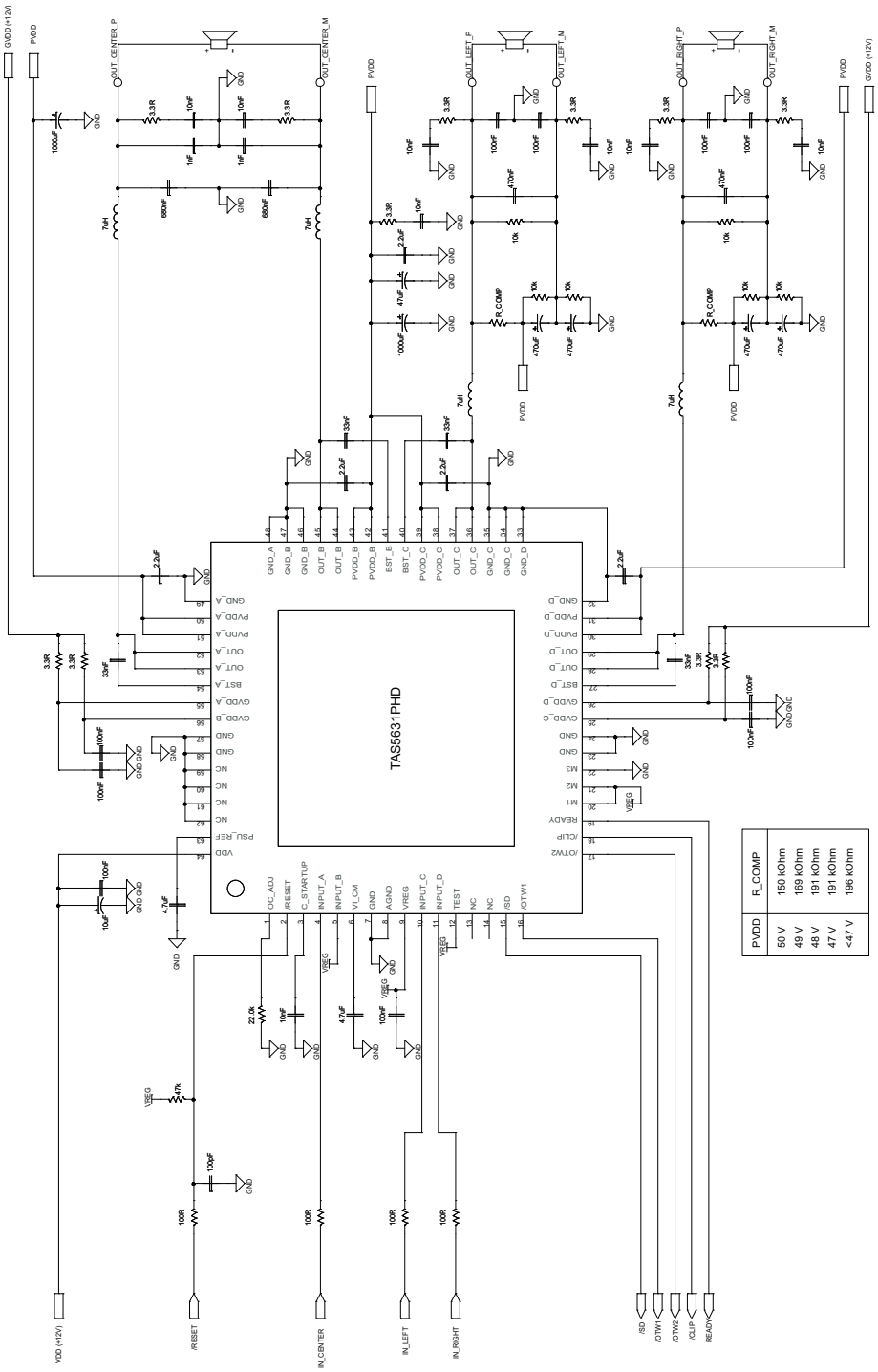

Figure 17. Typical 2.1 System (2N) Input BTL and (1N) Input SE Application

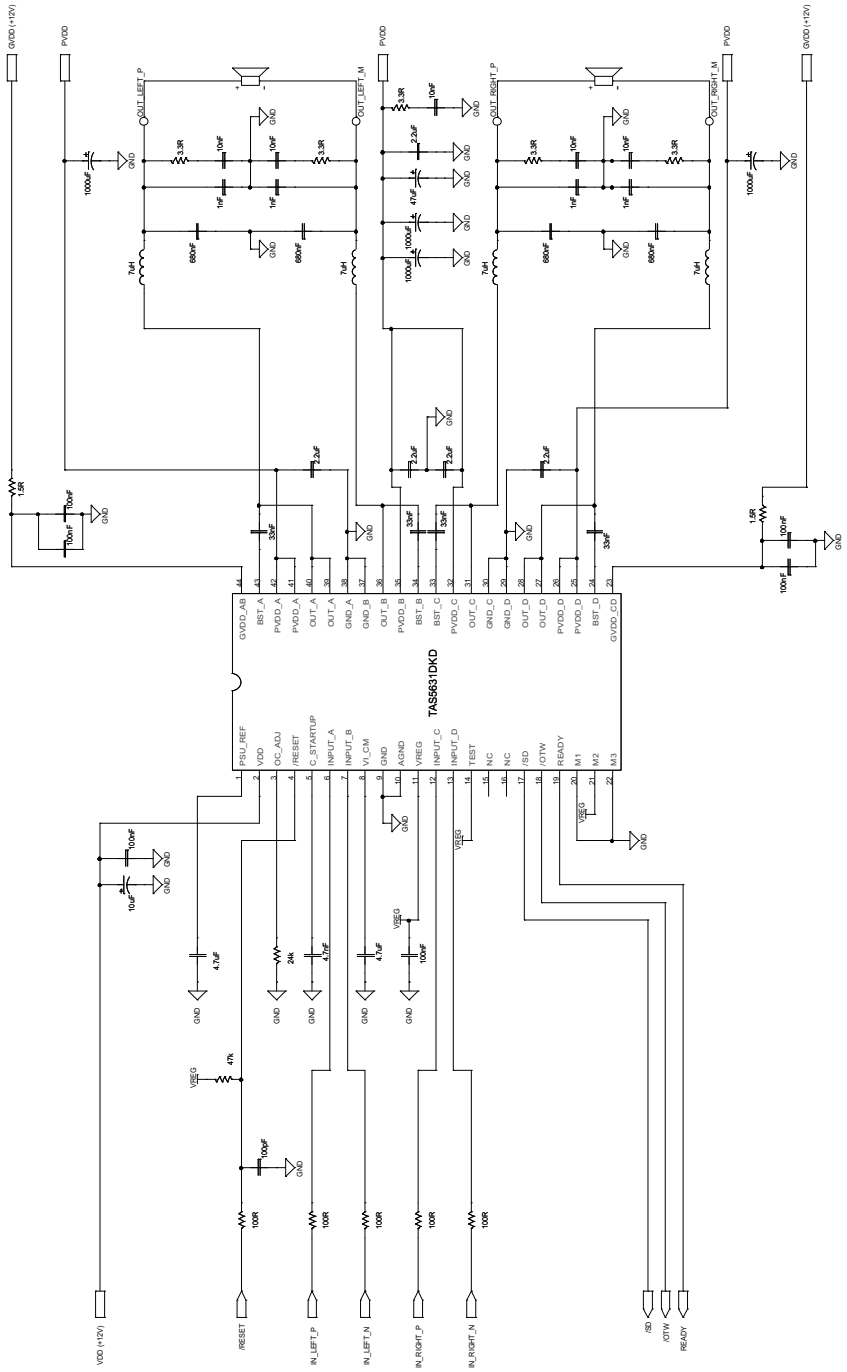

Figure 18. Typical Differential Input BTL Application With BD Modulation Filters, DKD Package

Copyright © 2009–2010, Texas Instruments Incorporated

THEORY OF OPERATION

POWER SUPPLIES

To facilitate system design, the TAS5631 needs only a 12-V supply in addition to the (typical) 50-V power-stage supply. An internal voltage regulator provides suitable voltage levels for the digital and low-voltage analog circuitry. Additionally, all circuitry requiring a floating voltage supply, e.g., the high-side gate drive, is accommodated by built-in bootstrap circuitry requiring only an external capacitor for each half-bridge.

To provide outstanding electrical and acoustical characteristics, the PWM signal path, including gate drive and output stage, is designed as identical, independent half-bridges. For this reason, each half-bridge has separate gate-drive supply pins (GVDD_X), bootstrap pins (BST_X), and power-stage supply pins (PVDD_X). Furthermore, an additional pin (VDD) is provided as a supply for all common circuits. Although supplied from the same 12-V source, it is highly recommended to separate GVDD_A, GVDD_B, GVDD_C, GVDD_D, and VDD on the printed-circuit board (PCB) by RC filters (see application diagram for details). These RC filters provide the recommended high-frequency isolation. Special attention should be paid to placing all decoupling capacitors as close to their associated pins as possible. In general, inductance between the power supply pins and decoupling capacitors must be avoided. (See reference board documentation for additional information.)

For a properly functioning bootstrap circuit, a small ceramic capacitor must be connected from each bootstrap pin (BST_X) to the power-stage output pin (OUT_X). When the power-stage output is low, the bootstrap capacitor is charged through an internal diode connected between the gate-drive power-supply pin (GVDD_X) and the bootstrap pin. When the power-stage output is high, the bootstrap capacitor potential is shifted above the output potential and thus provides a suitable voltage supply for the high-side gate driver. In an application with PWM switching frequencies in the range from 300 kHz to 4000 kHz, it is recommended to use 33-nF ceramic capacitors, size 0603 or 0805, for the bootstrap supply. These 33-nF capacitors ensure sufficient energy storage, even during minimal PWM duty cycles, to keep the high-side power stage FET (LDMOS) fully turned on during the remaining part of the PWM cycle.

Special attention should be paid to the power-stage power supply; this includes component selection, PCB placement, and routing. As indicated, each half-bridge has independent power-stage supply pins (PVDD_X). For optimal electrical performance, EMI compliance, and system reliability, it is important that each PVDD_X pin is decoupled with a 2.2-μF ceramic capacitor placed as close as possible to each supply pin. It is recommended to follow the PCB layout of the TAS5631 reference design. For additional information on recommended power supply and required components, see the application diagrams in this data sheet.

The 12-V supply should be from a low-noise, low-output-impedance voltage regulator. Likewise, the 50-V power-stage supply is assumed to have low output impedance and low noise. The power-supply sequence is not critical as facilitated by the internal power-on-reset circuit. Moreover, the TAS5631 is fully protected against erroneous power-stage turnon due to parasitic gate charging. Thus, voltage-supply ramp rates (dV/dt) are non-critical within the specified range (see the Recommended Operating Conditions table of this data sheet).

SYSTEM POWER-UP/POWER-DOWN SEQUENCE

Powering Up

The TAS5631 does not require a power-up sequence. The outputs of the H-bridges remain in a high-impedance state until the gate-drive supply voltage (GVDD_X) and VDD voltage are above the undervoltage protection (UVP) voltage threshold (see the Electrical Characteristics table of this data sheet). Although not specifically required, it is recommended to hold $\overline{\text{RESET}}$ in a low state while powering up the device. This allows an internal circuit to charge the external bootstrap capacitors by enabling a weak pulldown of the half-bridge output.

Powering Down

The TAS5631 does not require a power-down sequence. The device remains fully operational as long as the gate-drive supply (GVDD_X) voltage and VDD voltage are above the undervoltage protection (UVP) voltage threshold (see the Electrical Characteristics table of this data sheet). Although not specifically required, it is a good practice to hold $\overline{\text{RESET}}$ low during power down, thus preventing audible artifacts including pops or clicks.

Copyright © 2009–2010, Texas Instruments Incorporated

ERROR REPORTING

The $\overline{SD}$, $\overline{OTW}$, $\overline{OTW1}$, and $\overline{OTW2}$ pins are active-low, open-drain outputs. Their function is for protection-mode signaling to a PWM controller or other system-control device.

Any fault resulting in device shutdown is signaled by the $\overline{SD}$ pin going low. Likewise, $\overline{OTW}$ and $\overline{OTW2}$ go low when the device junction temperature exceeds 125°C and $\overline{OTW1}$ goes low when the junction temperature exceeds 100°C (see the following table).

$\overline{SD}$	$\overline{OTW1}$	$\overline{OTW2}$, $\overline{OTW}$	DESCRIPTION
0	0	0	Overtemperature (OTE) or overload (OLP) or undervoltage (UVP)
0	0	1	Overload (OLP) or undervoltage (UVP). Junction temperature higher than 100°C (overtemperature warning)
0	1	1	Overload (OLP) or undervoltage (UVP)
1	0	0	Junction temperature higher than 125°C (overtemperature warning)
1	0	1	Junction temperature higher than 100°C (overtemperature warning)
1	1	1	Junction temperature lower than 100°C and no OLP or UVP faults (normal operation)

Note that asserting $\overline{RESET}$ low forces the $\overline{SD}$ signal high, independent of faults being present. TI recommends monitoring the $\overline{OTW}$ signal using the system microcontroller and responding to an overtemperature warning signal by, e.g., turning down the volume to prevent further heating of the device resulting in device shutdown (OTE).

To reduce external component count, an internal pullup resistor to 3.3 V is provided on both $\overline{SD}$ and $\overline{OTW}$ outputs. Level compliance for 5-V logic can be obtained by adding external pullup resistors to 5 V (see the Electrical Characteristics table of this data sheet for further specifications).

DEVICE PROTECTION SYSTEM

The TAS5631 contains advanced protection circuitry carefully designed to facilitate system integration and ease of use, as well as to safeguard the device from permanent failure due to a wide range of fault conditions such as short circuits, overload, overtemperature, and undervoltage. The TAS5631 responds to a fault by immediately setting the power stage in a high-impedance (Hi-Z) state and asserting the ^{SD} pin low. In situations other than overload and overtemperature error (OTE), the device automatically recovers when the fault condition has been removed, i.e., the supply voltage has increased.

The device functions on errors, as shown in the following table.

BTL Mode		PBTL Mode		SE Mode	
Local Error In	Turns Off	Local Error In	Turns Off	Local Error In	Turns Off
A	A + B	A	A + B + C + D	A	A + B
B		B		B	
C	C + D	C		C	C + D
D		D		D	

Bootstrap UVP does not shut down according to the table; it shuts down the respective half-bridge.

PIN-TO-PIN SHORT-CIRCUIT PROTECTION (PPSC)

The PPSC detection system protects the device from permanent damage if a power output pin (OUT_X) is shorted to GND_X or PVDD_X. For comparison, the OC protection system detects an overcurrent after the demodulation filter, whereas PPSC detects shorts directly at the pin before the filter. PPSC detection is performed at startup, i.e., when VDD is supplied; consequently, a short to either GND_X or PVDD_X after system startup does not activate the PPSC detection system. When PPSC detection is activated by a short on the output, all half-bridges are kept in a Hi-Z state until the short is removed; the device then continues the start-up sequence and starts switching. The detection is controlled globally by a two-step sequence. The first step ensures that there are no shorts from OUT_X to GND_X; the second step tests that there are no shorts from OUT_X to PVDD_X. The total duration of this process is roughly proportional to the capacitance of the

 Copyright © 2009–2010, Texas Instruments Incorporated

output LC filter. The typical duration is <15 ms/μF. While the PPSC detection is in progress, $\overline{SD}$ is kept low, and the device does not react to changes applied to the $\overline{RESET}$ pin. If no shorts are present, the PPSC detection passes, and $\overline{SD}$ is released. A device reset does not start a new PPSC detection. PPSC detection is enabled in BTL and PBTL output configurations; the detection is not performed in SE mode. To make sure not to trip the PPSC detection system, it is recommended not to insert resistive load to GND_X or PVDD_X.

OVERTEMPERATURE PROTECTION

The two different package options have individual overtemperature protection schemes.

PHD Package

The TAS5631 PHD package option has a three-level temperature-protection system that asserts an active-low warning signal ($\overline{OTW1}$) when the device junction temperature exceeds 100°C (typical), ($\overline{OTW2}$) when the device junction temperature exceeds 125°C (typical) and, if the device junction temperature exceeds 155°C (typical), the device is put into thermal shutdown, resulting in all half-bridge outputs being set in the high-impedance (Hi-Z) state and $\overline{SD}$ being asserted low. OTE is latched in this case. To clear the OTE latch, $\overline{RESET}$ must be asserted. Thereafter, the device resumes normal operation.

DKD Package

The TAS5631 DKD package option has a two-level temperature-protection system that asserts an active-low warning signal ($\overline{OTW}$) when the device junction temperature exceeds 125°C (typical) and, if the device junction temperature exceeds 155°C (typical), the device is put into thermal shutdown, resulting in all half-bridge outputs being set in the high-impedance (Hi-Z) state and $\overline{SD}$ being asserted low. OTE is latched in this case. To clear the OTE latch, $\overline{RESET}$ must be asserted. Thereafter, the device resumes normal operation.

UNDERVOLTAGE PROTECTION (UVP) AND POWER-ON RESET (POR)

The UVP and POR circuits of the TAS5631 fully protect the device in any power-up/down and brownout situation. While powering up, the POR circuit resets the overload circuit (OLP) and ensures that all circuits are fully operational when the GVDD_X and VDD supply voltages reach values stated in the Electrical Characteristics table. Although GVDD_X and VDD are independently monitored, a supply-voltage drop below the UVP threshold on any VDD or GVDD_X pin results in all half-bridge outputs immediately being set in the high-impedance (Hi-Z) state and $\overline{SD}$ being asserted low. The device automatically resumes operation when all supply voltages have increased above the UVP threshold.

DEVICE RESET

When RESET is asserted low, all power-stage FETs in the four half-bridges are forced into a high-impedance (Hi-Z) state.

In BTL modes, to accommodate bootstrap charging prior to switching start, asserting the reset input low enables weak pulldown of the half-bridge outputs. In the SE mode, the output is forced into a high-impedance state when asserting the reset input low. Asserting the reset input low removes any fault information to be signaled on the $\overline{SD}$ output, i.e., $\overline{SD}$ is forced high. A rising-edge transition on the reset input allows the device to resume operation after an overload fault. To ensure thermal reliability, the rising edge of reset must occur no sooner than 4 ms after the falling edge of $\overline{SD}$.

SYSTEM DESIGN CONSIDERATIONS

A rising-edge transition on the reset input allows the device to execute the startup sequence and start switching.

Apply only audio when the state of READY is high; that starts and stops the amplifier without having audible artifacts that are heard in the output transducers. If an overcurrent protection event is introduced, the READY signal goes low; hence, filtering is needed if the signal is intended for audio muting in non-microcontroller systems.

The CLIP signal indicates that the output is approaching clipping. The signal can be used to either an audio volume decrease or intelligent power supply controlling a low and a high rail.

The device inverts the audio signal from input to output.

The VREG pin is not recommended to be used as a voltage source for external circuitry.

Copyright © 2009–2010, Texas Instruments Incorporated

PRINTED CIRCUIT BOARD RECOMMENDATION

Use an unbroken ground plane to have good low-impedance and -inductance return path to the power supply for power and audio signals. PCB layout, audio performance and EMI are linked closely together. The circuit contains high, fast-switching currents; therefore, care must be taken to prevent damaging voltage spikes. Routing for the audio input should be kept short and together with the accompanying audio source ground. It is important to keep a solid local ground area underneath the device to minimize ground bounce.

Netlist for this printed circuit board is generated from the schematic in Figure 14.

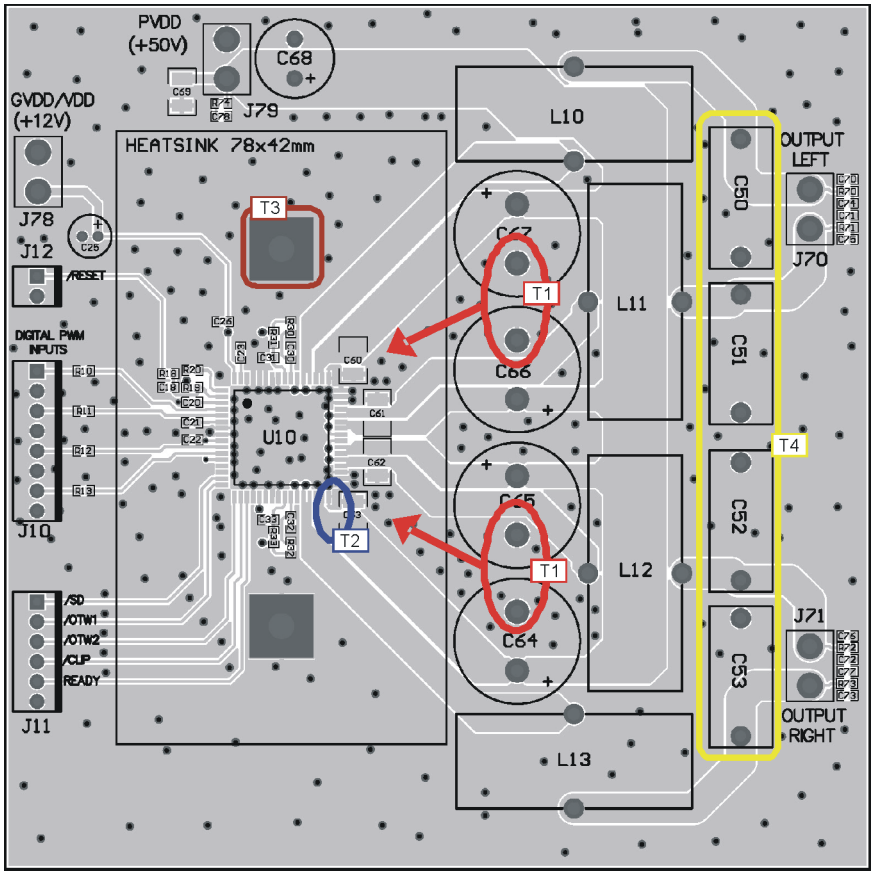

Note T1: PVDD decoupling bulk capacitors C60–C64 should be as close as possible to the PVDD and GND_X pins; the heat sink sets the distance. Wide traces should be routed on the top layer with direct connection to the pins and without going through vias. No vias or traces should be blocking the current path.

Note T2: Close decoupling of PVDD with low-impedance X7R ceramic capacitors is placed under the heat sink and close to the pins.

Note T3: Heat sink must have a good connection to PCB ground.

Note T4: Output filter capacitors must be linear in the applied voltage range, and preferably metal film types.

Figure 19. Printed Circuit Board – Top Layer

Copyright © 2009–2010, Texas Instruments Incorporated

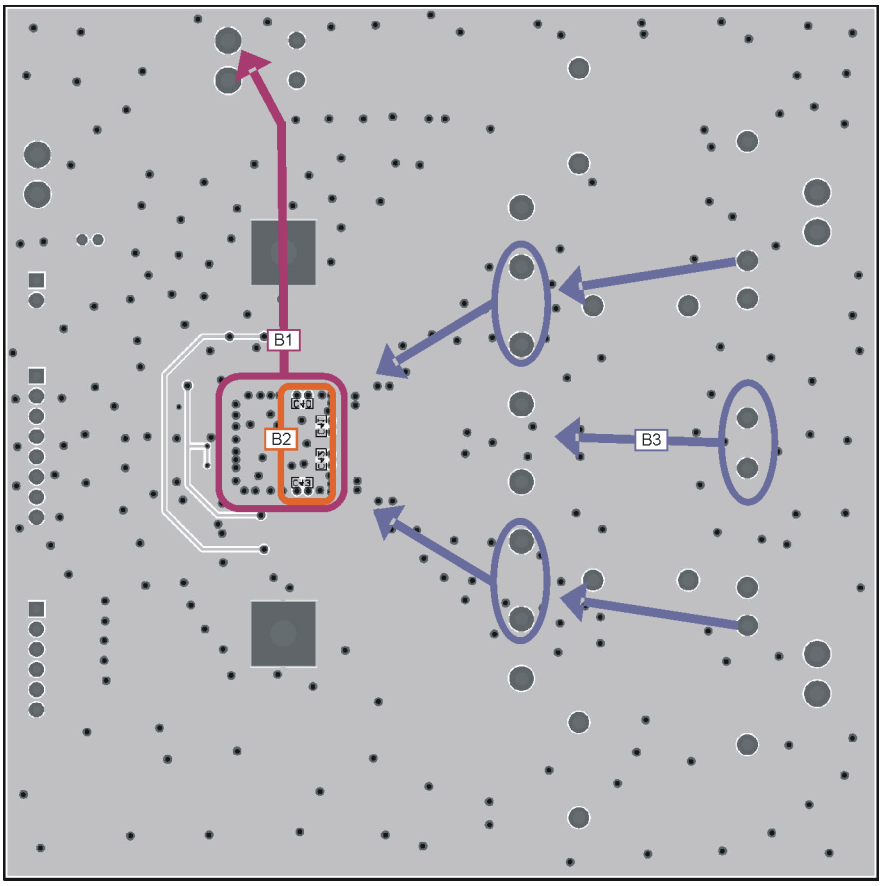

Note B1: It is important to have a direct, low-impedance return path for high current back to the power supply. Keep impedance low from top to bottom side of PCB through a lot of ground vias.

Note B2: Bootstrap low-impedance X7R ceramic capacitors placed on bottom side provide a short low-inductance current loop.

Note B3: Return currents from bulk capacitors and output filter capacitors

Figure 20. Printed Circuit Board – Bottom Layer

REVISION HISTORY

Changes from Original (July 2009) to Revision A	Page
• Deleted Product Preview from the PHD package	3

Changes from Revision A (September 2009) to Revision B	Page
• Changed OLPC - Overload protection counter TYP value From: 1.3 To: 2.6 ms	10

Changes from Revision B (January 2010) to Revision C	Page
• Deleted text form the last paragraph of the DESCRIPTION: Coupled with TI's class-G power-supply reference design for TAS563x, industry-leading levels of efficiency can be achieved.	1
• Changed the front page illustration	1
• Changed Pin 41 From BST_C To BST_B in the PHD PACKAGE	2

Copyright © 2009–2010, Texas Instruments Incorporated

PACKAGING INFORMATION

Orderable Device	Status (1)	Package Type	Package Drawing	Pins	Package Qty	Eco Plan (2)	Lead/Ball Finish	MSL Peak Temp (3)	Op Temp (°C)	Top-Side Markings (4)	Samples
TAS5631DKD	NRND	HSSOP	DKD	44	29	Green (RoHS & no Sb/Br)	CU NIPDAU	Level-4-260C-72 HR	0 to 70	TAS5631	
TAS5631DKDR	NRND	HSSOP	DKD	44	500	Green (RoHS & no Sb/Br)	CU NIPDAU	Level-4-260C-72 HR	0 to 70	TAS5631	
TAS5631PHD	NRND	HTQFP	PHD	64	90	Green (RoHS & no Sb/Br)	CU NIPDAU	Level-5A-260C-24 HR	0 to 70	TAS5631	
TAS5631PHDR	NRND	HTQFP	PHD	64	1000	Green (RoHS & no Sb/Br)	CU NIPDAU	Level-5A-260C-24 HR	0 to 70	TAS5631	

(1) The marketing status values are defined as follows:
ACTIVE: Product device recommended for new designs.
LIFEBUY: TI has announced that the device will be discontinued, and a lifetime-buy period is in effect.
NRND: Not recommended for new designs. Device is in production to support existing customers, but TI does not recommend using this part in a new design.
PREVIEW: Device has been announced but is not in production. Samples may or may not be available.
OBSOLETE: TI has discontinued the production of the device.

(2) Eco Plan - The planned eco-friendly classification: Pb-Free (RoHS), Pb-Free (RoHS Exempt), or Green (RoHS & no Sb/Br) - please check http://www.ti.com/productcontent for the latest availability information and additional product content details.
TBD: The Pb-Free/Green conversion plan has not been defined.
Pb-Free (RoHS): TI's terms "Lead-Free" or "Pb-Free" mean semiconductor products that are compatible with the current RoHS requirements for all 6 substances, including the requirement that lead not exceed 0.1% by weight in homogeneous materials. Where designed to be soldered at high temperatures, TI Pb-Free products are suitable for use in specified lead-free processes.
Pb-Free (RoHS Exempt): This component has a RoHS exemption for either 1) lead-based flip-chip solder bumps used between the die and package, or 2) lead-based die adhesive used between the die and leadframe. The component is otherwise considered Pb-Free (RoHS compatible) as defined above.
Green (RoHS & no Sb/Br): TI defines "Green" to mean Pb-Free (RoHS compatible), and free of Bromine (Br) and Antimony (Sb) based flame retardants (Br or Sb do not exceed 0.1% by weight in homogeneous material)

(3) MSL, Peak Temp. -- The Moisture Sensitivity Level rating according to the JEDEC industry standard classifications, and peak solder temperature.

(4) Multiple Top-Side Markings will be inside parentheses. Only one Top-Side Marking contained in parentheses and separated by a "~" will appear on a device. If a line is indented then it is a continuation of the previous line and the two combined represent the entire Top-Side Marking for that device.

Important Information and Disclaimer: The information provided on this page represents TI's knowledge and belief as of the date that it is provided. TI bases its knowledge and belief on information provided by third parties, and makes no representation or warranty as to the accuracy of such information. Efforts are underway to better integrate information from third parties. TI has taken and continues to take reasonable steps to provide representative and accurate information but may not have conducted destructive testing or chemical analysis on incoming materials and chemicals. TI and TI suppliers consider certain information to be proprietary, and thus CAS numbers and other limited information may not be available for release.

In no event shall TI's liability arising out of such information exceed the total purchase price of the TI part(s) at issue in this document sold by TI to Customer on an annual basis.

TAPE AND REEL INFORMATION

REEL DIMENSIONS

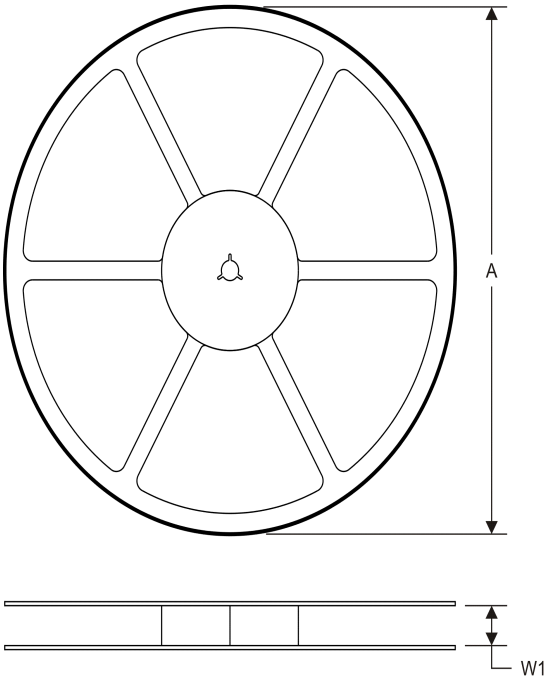

TAPE DIMENSIONS

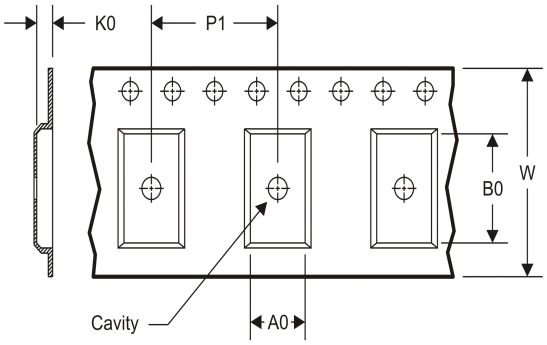

A0	Dimension designed to accommodate the component width
B0	Dimension designed to accommodate the component length
K0	Dimension designed to accommodate the component thickness
W	Overall width of the carrier tape
P1	Pitch between successive cavity centers

TAPE AND REEL INFORMATION

*All dimensions are nominal

Device	Package Type	Package Drawing	Pins	SPQ	Reel Diameter (mm)	Reel Width W1 (mm)	A0 (mm)	B0 (mm)	K0 (mm)	P1 (mm)	W (mm)	Pin1 Quadrant
TAS5631DKDR	HSSOP	DKD	44	500	330.0	24.4	14.7	16.4	4.0	20.0	24.0	Q1
TAS5631PHDR	HTQFP	PHD	64	1000	330.0	24.4	17.0	17.0	1.5	20.0	24.0	Q2

TAPE AND REEL BOX DIMENSIONS

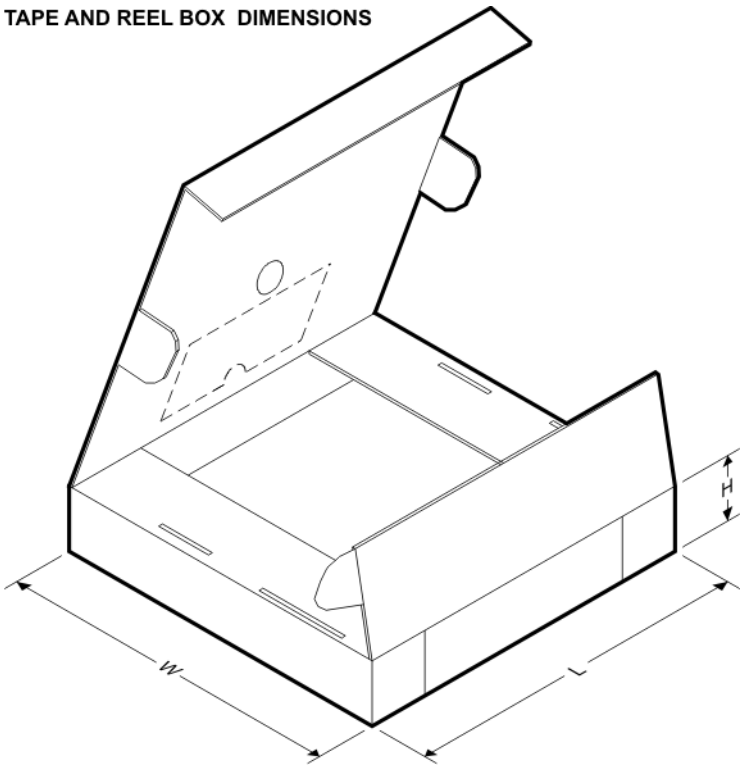

*All dimensions are nominal

Device	Package Type	Package Drawing	Pins	SPQ	Length (mm)	Width (mm)	Height (mm)
TAS5631DKDR	HSSOP	DKD	44	500	367.0	367.0	45.0
TAS5631PHDR	HTQFP	PHD	64	1000	367.0	367.0	45.0

DKD (R–PDSO–G44) PowerPAD™ PLASTIC SMALL OUTLINE

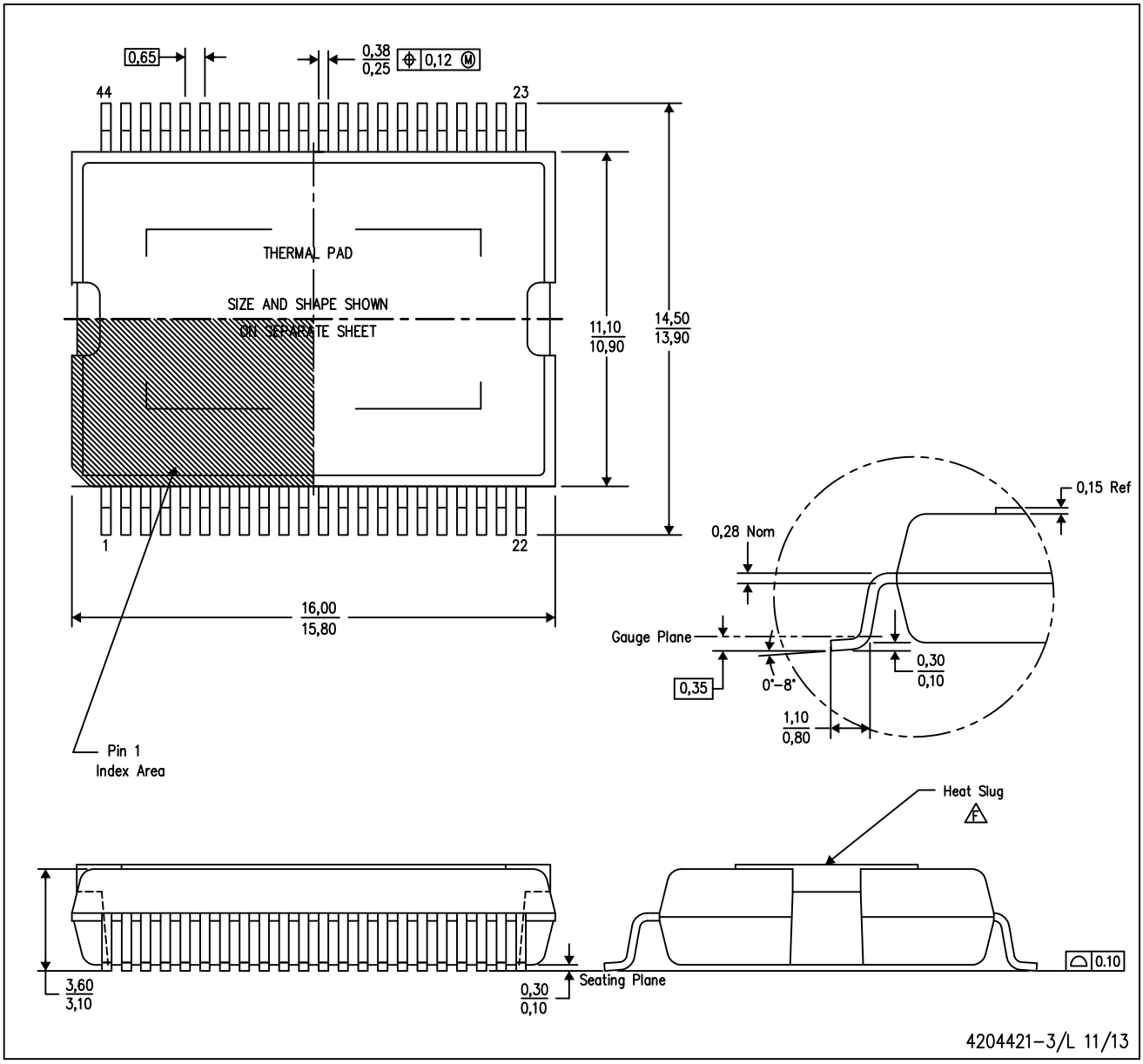

NOTES:
- A. All linear dimensions are in millimeters. Dimensioning and tolerancing per ASME Y14.5M–1994.
- B. This drawing is subject to change without notice.
- C. Body dimensions do not include mold flash or protrusion not to exceed 0.15mm.
- D. This package is designed to be soldered to a thermal pad on the board. Refer to Technical Brief, PowerPad Thermally Enhanced Package, Texas Instruments Literature No. SLMA002 for information regarding recommended board layout. This document is available at www.ti.com <http://www.ti.com>.
- E. See the additional figure in the Product Data Sheet for details regarding the exposed thermal pad features and dimensions.
- F. The package thermal performance is optimized for conductive cooling with attachment to an external heat sink.

PowerPAD is a trademark of Texas Instruments.

DKD (R-PDSO-G44) PowerPAD™ PLASTIC SMALL OUTLINE

THERMAL INFORMATION

This PowerPAD™ package incorporates an exposed thermal pad that is designed to be attached directly to an external heatsink. This design optimizes the heat transfer from the integrated circuit (IC).

For additional information on the PowerPAD package and how to take advantage of its heat dissipating abilities, refer to Technical Brief, PowerPAD Thermally Enhanced Package, Texas Instruments Literature No. SLMA002 and Application Brief, PowerPAD Made Easy, Texas Instruments Literature No. SLMA004. Both documents are available at www.ti.com.

The exposed thermal pad dimensions for this package are shown in the following illustration.

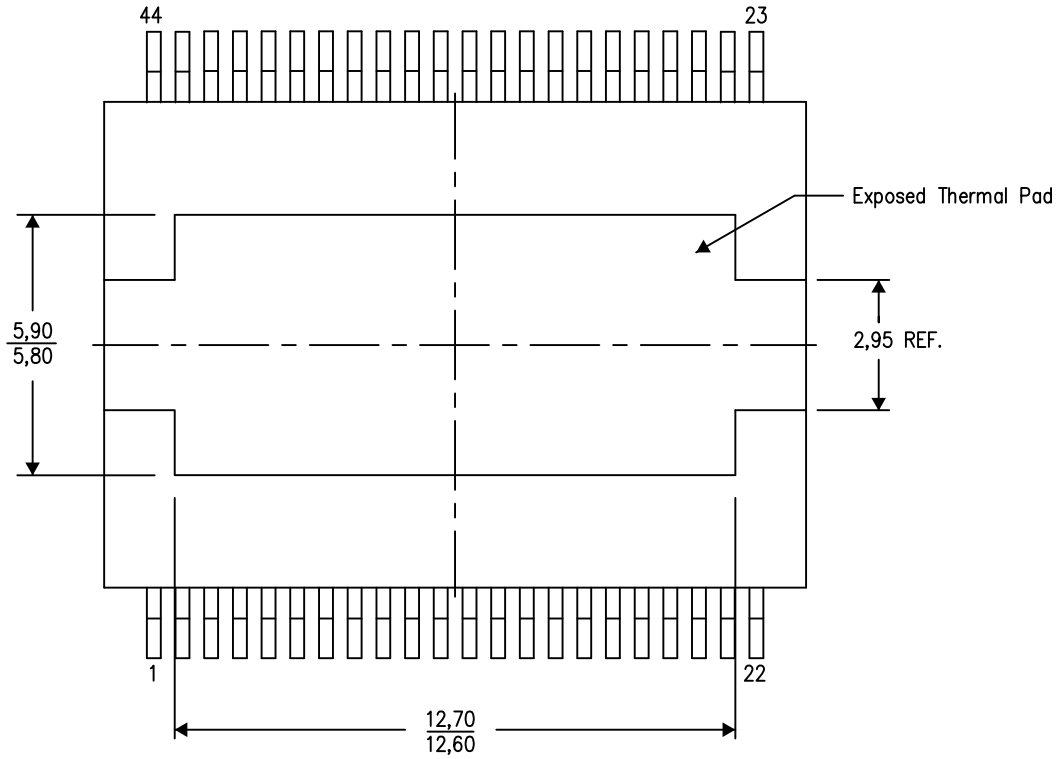

Top View

Exposed Thermal Pad Dimensions

4210894-3/E 06/12

NOTE: All linear dimensions are in millimeters

DKD (R–PDSO–G44) PowerPAD™ PLASTIC SMALL OUTLINE

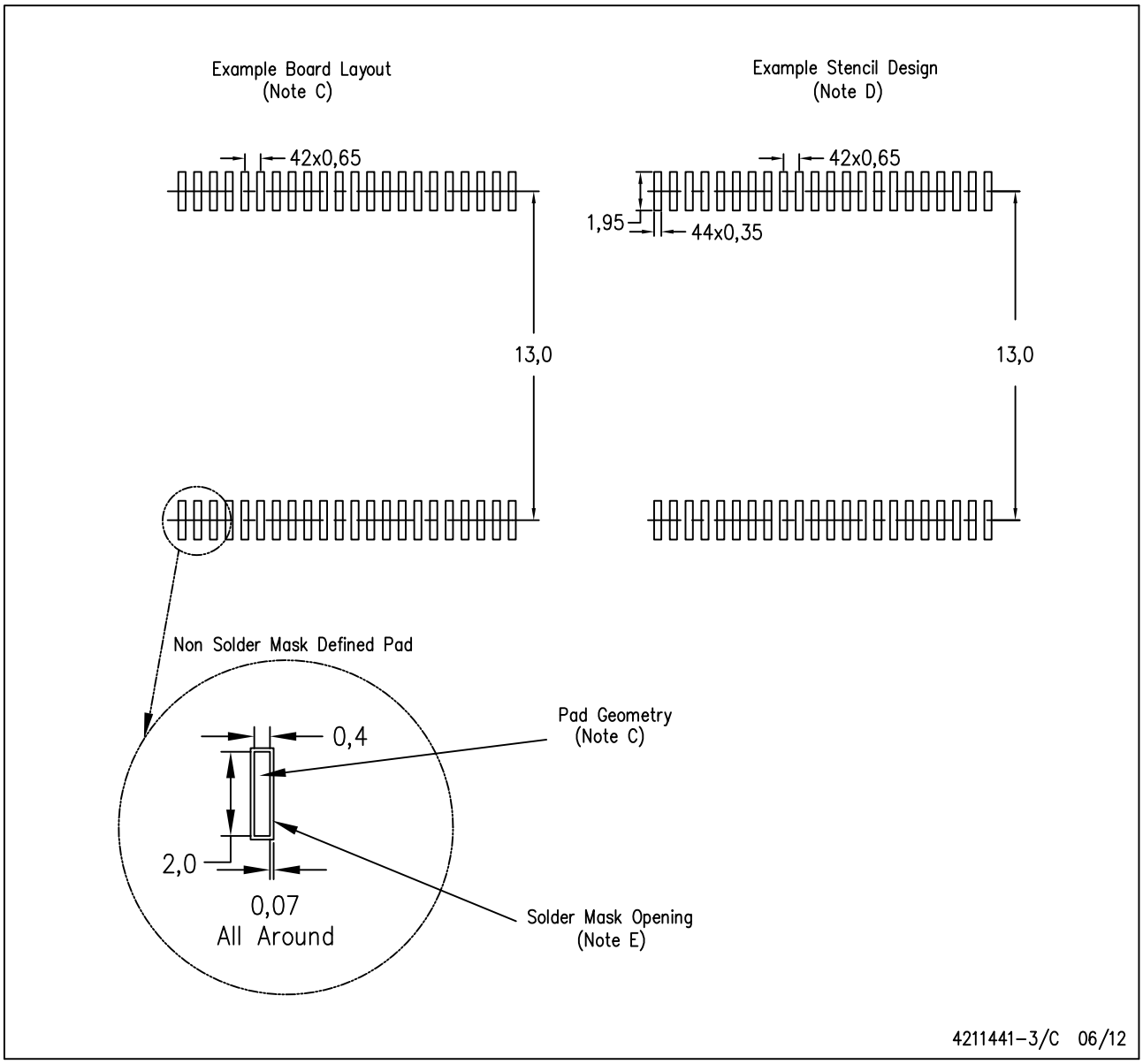

NOTES:
A. All linear dimensions are in millimeters.
B. This drawing is subject to change without notice.
C. Publication IPC–7351 is recommended for alternate designs.
D. Laser cutting apertures with trapezoidal walls and also rounding corners will offer better paste release. Customers should contact their board assembly site for stencil design recommendations. Refer to IPC–7525.
E. Customers should contact their board fabrication site for solder mask tolerances between and around signal pads.

PowerPAD is a trademark of Texas Instruments.

PHD (S-PQFP-G64) PowerPAD™ PLASTIC QUAD FLATPACK (DIE DOWN)

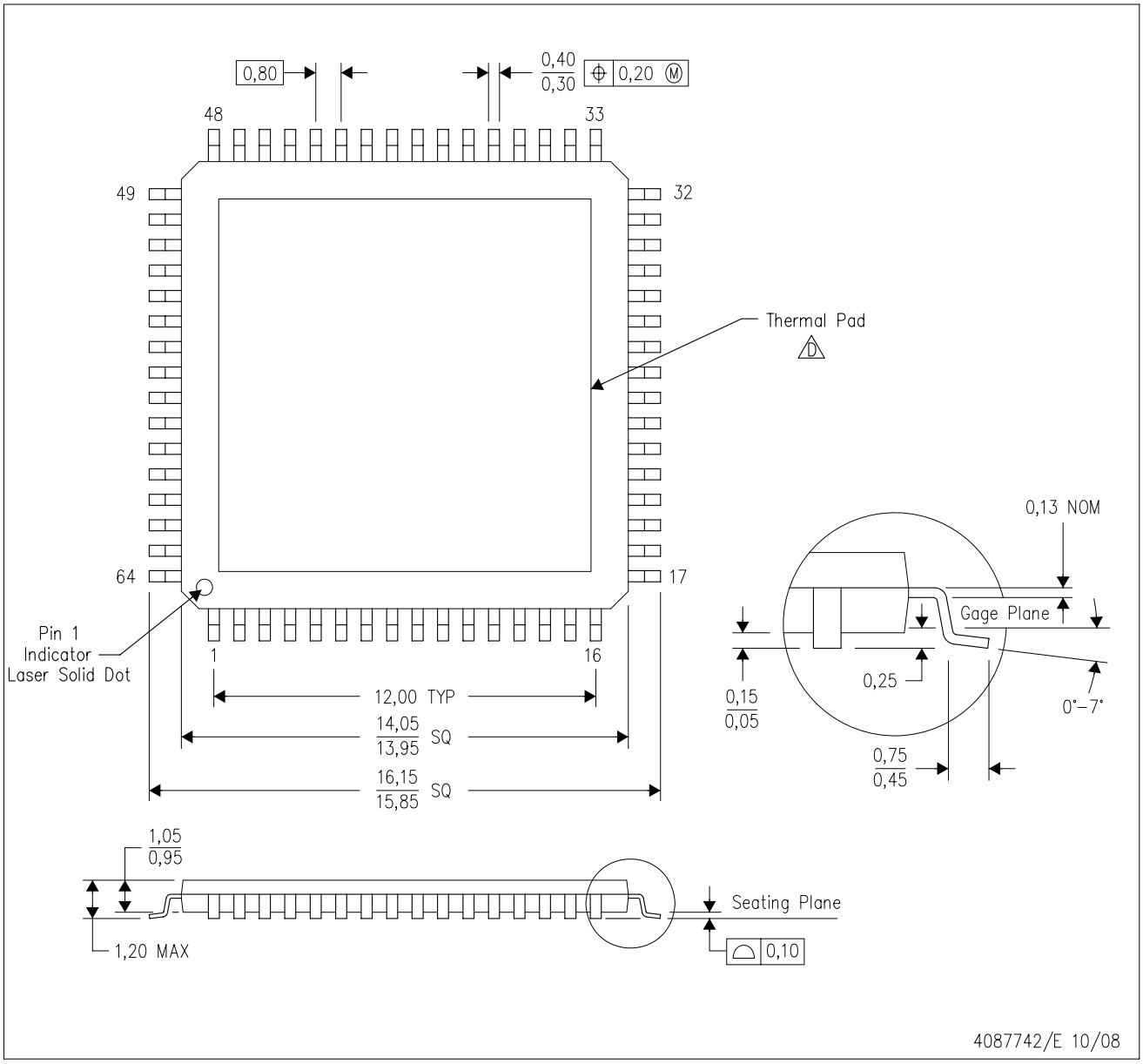

NOTES:
A. All linear dimensions are in millimeters. Dimensioning and tolerancing per ASME Y14.5M–1994.
B. This drawing is subject to change without notice.
C. Body dimensions do not include mold flash or protrusion
D. This package is designed to be attached directly to an external heatsink. Refer to Technical Brief, PowerPad Thermally Enhanced Package, Texas Instruments Literature No. SLMA002 for information regarding recommended board layout. This document is available at www.ti.com <http://www.ti.com>. See the product data sheet for details regarding the exposed thermal pad dimensions.
E. Falls within JEDEC MS-026

PowerPAD is a trademark of Texas Instruments.

PHD (S–PQFP–G64) PowerPAD™ PLASTIC QUAD FLATPACK (DIE DOWN)

THERMAL INFORMATION

This PowerPAD™ package incorporates an exposed thermal pad that is designed to be attached directly to an external heatsink. This design optimizes the heat transfer from the integrated circuit (IC).

For additional information on the PowerPAD package and how to take advantage of its heat dissipating abilities, refer to Technical Brief, PowerPAD Thermally Enhanced Package, Texas Instruments Literature No. SLMA002 and Application Brief, PowerPAD Made Easy, Texas Instruments Literature No. SLMA004. Both documents are available at www.ti.com.

The exposed thermal pad dimensions for this package are shown in the following illustration.

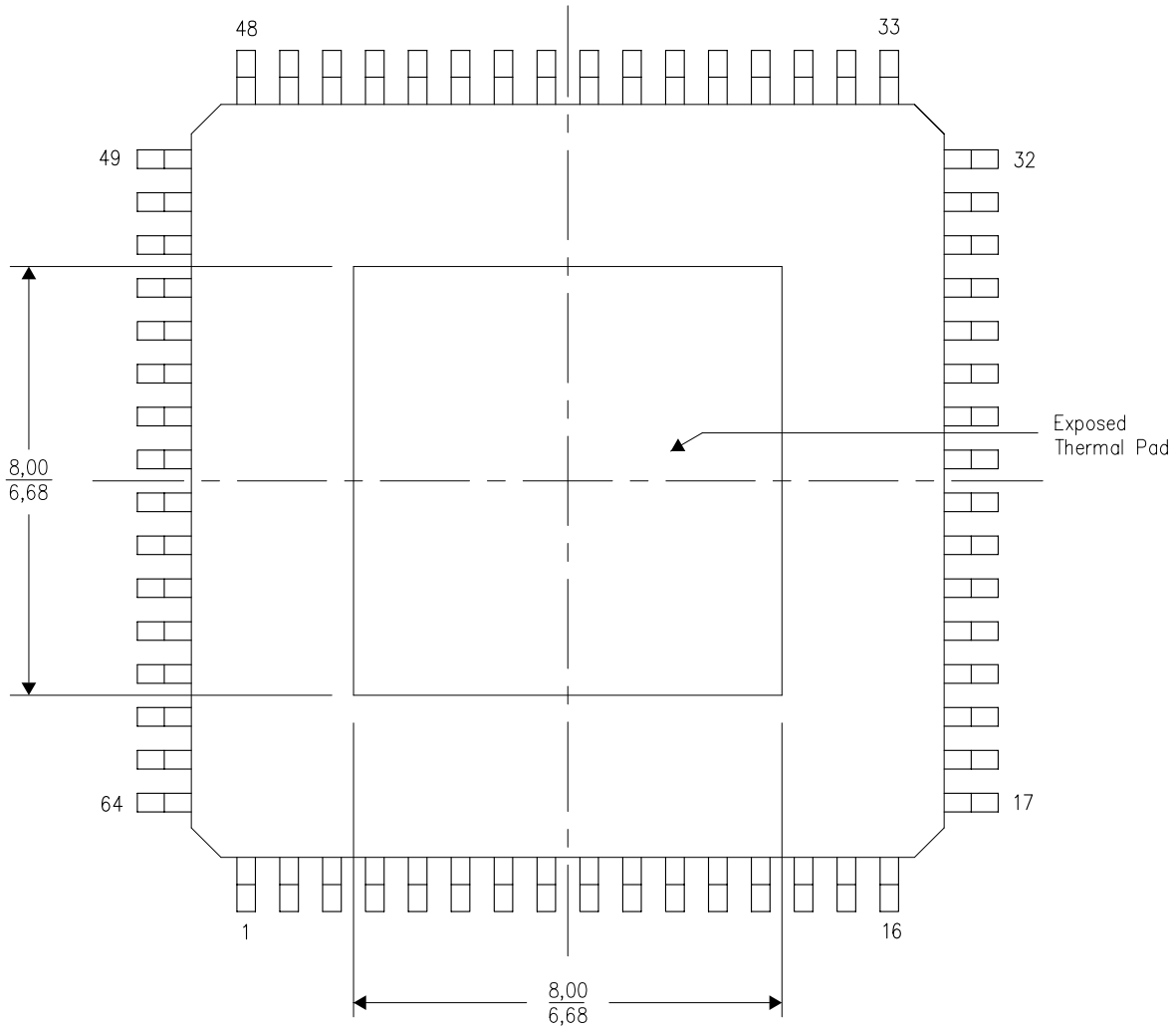

Top View

Exposed Thermal Pad Dimensions

4206328–3/H 04/11

NOTE: A. All linear dimensions are in millimeters

PowerPAD is a trademark of Texas Instruments

IMPORTANT NOTICE

Texas Instruments Incorporated and its subsidiaries (TI) reserve the right to make corrections, enhancements, improvements and other changes to its semiconductor products and services per JESD46, latest issue, and to discontinue any product or service per JESD48, latest issue. Buyers should obtain the latest relevant information before placing orders and should verify that such information is current and complete. All semiconductor products (also referred to herein as “components”) are sold subject to TI’s terms and conditions of sale supplied at the time of order acknowledgment.

TI warrants performance of its components to the specifications applicable at the time of sale, in accordance with the warranty in TI’s terms and conditions of sale of semiconductor products. Testing and other quality control techniques are used to the extent TI deems necessary to support this warranty. Except where mandated by applicable law, testing of all parameters of each component is not necessarily performed.

TI assumes no liability for applications assistance or the design of Buyers’ products. Buyers are responsible for their products and applications using TI components. To minimize the risks associated with Buyers’ products and applications, Buyers should provide adequate design and operating safeguards.

TI does not warrant or represent that any license, either express or implied, is granted under any patent right, copyright, mask work right, or other intellectual property right relating to any combination, machine, or process in which TI components or services are used. Information published by TI regarding third-party products or services does not constitute a license to use such products or services or a warranty or endorsement thereof. Use of such information may require a license from a third party under the patents or other intellectual property of the third party, or a license from TI under the patents or other intellectual property of TI.

Reproduction of significant portions of TI information in TI data books or data sheets is permissible only if reproduction is without alteration and is accompanied by all associated warranties, conditions, limitations, and notices. TI is not responsible or liable for such altered documentation. Information of third parties may be subject to additional restrictions.

Resale of TI components or services with statements different from or beyond the parameters stated by TI for that component or service voids all express and any implied warranties for the associated TI component or service and is an unfair and deceptive business practice. TI is not responsible or liable for any such statements.

Buyer acknowledges and agrees that it is solely responsible for compliance with all legal, regulatory and safety-related requirements concerning its products, and any use of TI components in its applications, notwithstanding any applications-related information or support that may be provided by TI. Buyer represents and agrees that it has all the necessary expertise to create and implement safeguards which anticipate dangerous consequences of failures, monitor failures and their consequences, lessen the likelihood of failures that might cause harm and take appropriate remedial actions. Buyer will fully indemnify TI and its representatives against any damages arising out of the use of any TI components in safety-critical applications.

In some cases, TI components may be promoted specifically to facilitate safety-related applications. With such components, TI’s goal is to help enable customers to design and create their own end-product solutions that meet applicable functional safety standards and requirements. Nonetheless, such components are subject to these terms.

No TI components are authorized for use in FDA Class III (or similar life-critical medical equipment) unless authorized officers of the parties have executed a special agreement specifically governing such use.

Only those TI components which TI has specifically designated as military grade or “enhanced plastic” are designed and intended for use in military/aerospace applications or environments. Buyer acknowledges and agrees that any military or aerospace use of TI components which have ***not*** been so designated is solely at the Buyer's risk, and that Buyer is solely responsible for compliance with all legal and regulatory requirements in connection with such use.

TI has specifically designated certain components as meeting ISO/TS16949 requirements, mainly for automotive use. In any case of use of non-designated products, TI will not be responsible for any failure to meet ISO/TS16949.

Products		**Applications**	
Audio	www.ti.com/audio	Automotive and Transportation	www.ti.com/automotive
Amplifiers	amplifier.ti.com	Communications and Telecom	www.ti.com/communications
Data Converters	dataconverter.ti.com	Computers and Peripherals	www.ti.com/computers
DLP® Products	www.dlp.com	Consumer Electronics	www.ti.com/consumer-apps
DSP	dsp.ti.com	Energy and Lighting	www.ti.com/energy
Clocks and Timers	www.ti.com/clocks	Industrial	www.ti.com/industrial
Interface	interface.ti.com	Medical	www.ti.com/medical
Logic	logic.ti.com	Security	www.ti.com/security
Power Mgmt	power.ti.com	Space, Avionics and Defense	www.ti.com/space-avionics-defense
Microcontrollers	microcontroller.ti.com	Video and Imaging	www.ti.com/video
RFID	www.ti-rfid.com		
OMAP Applications Processors	www.ti.com/omap	**TI E2E Community**	e2e.ti.com
Wireless Connectivity	www.ti.com/wirelessconnectivity		

Mailing Address: Texas Instruments, Post Office Box 655303, Dallas, Texas 75265
Copyright © 2013, Texas Instruments Incorporated

Mouser Electronics

Authorized Distributor

Click to View Pricing, Inventory, Delivery & Lifecycle Information:

Texas Instruments:

TAS5631PHD2EVM