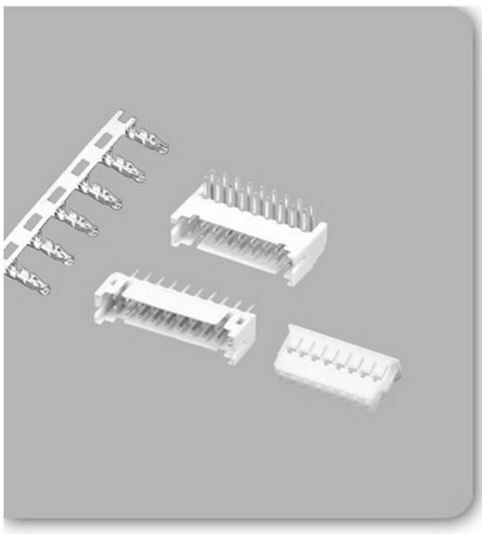

Unit:mm

SPECIFICATIONS

- Poles：6~40
- Applicable wire：AWG#24-#30
- Voltage rating：250V DC/AC
- Current rating：2.0A
- Withstand voltage：800V AC
- Working Temperature：-25℃～+85℃
- Insulation resistance：≥ 1000MΩ
- Contact resistance：≤ 0.01Ω
- Applicable PC board thickness：0.6~1.2mm

UL:Recognized No.E309635
RoHS-specification and
Halogen-free products

PH-D-2xnY 双排母座

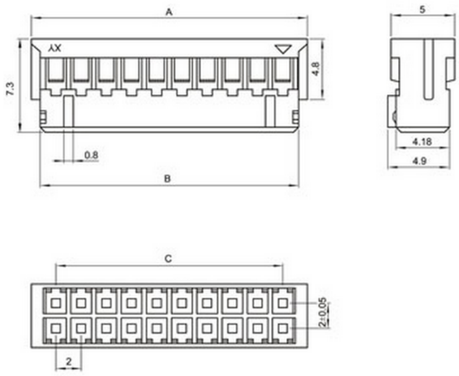

PH-D-2xnA 双排直针针座

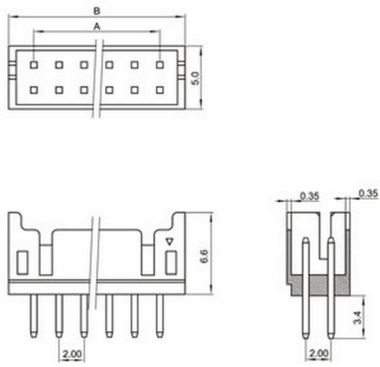

PH-D-2xnAWD 双排弯针针座

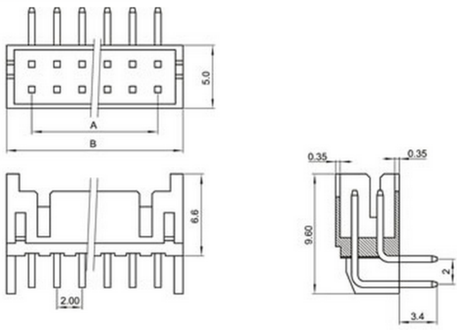

Unit:mm

Mounting Measurement

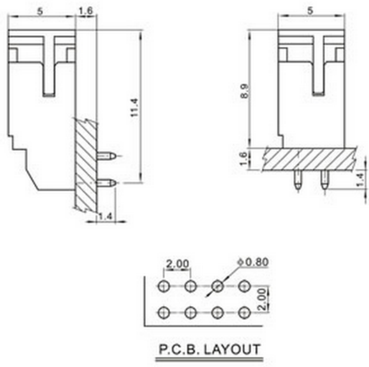

PH-D-PT

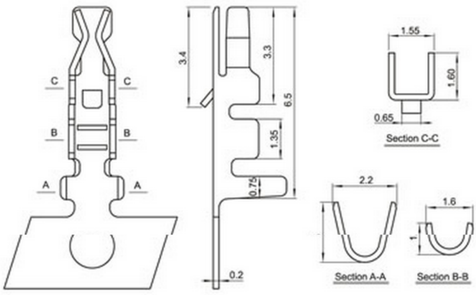

Terminal(PH-D)

Type	Applicable wires		O.D of wire ins	Material	Finish
	mm²	AWG#	mm		
BM-PH-D	0.08~0.3	28~22	1.2~1.9	Phos.bronze	Tin-plated

Poles	Type	Size(mm)	
		A	B
2	PH-2x2Y	2.0	6.0
3	PH-2x3Y	4.0	8.0
4	PH-2x4Y	6.0	10.0
5	PH-2x5Y	8.0	12.0
6	PH-2x6Y	10.0	14.0
7	PH-2x7Y	12.0	16.0
8	PH-2x8Y	14.0	18.0
9	PH-2x9Y	16.0	20.0
10	PH-2x10Y	18.0	22.0
11	PH-2x11Y	20.0	24.0
12	PH-2x12Y	22.0	26.0
13	PH-2x13Y	24.0	28.0
14	PH-2x14Y	26.0	30.0
15	PH-2x15Y	28.0	32.0
16	PH-2x16Y	30.0	34.0
17	PH-2x17Y	32.0	36.0
18	PH-2x18Y	34.0	38.0
19	PH-2x19Y	36.0	40.0
20	PH-2x20Y	38.0	42.0

Poles	Type	Size(mm)	
		A	B
2	PH-2x2A	2.0	6.0
3	PH-2x3A	4.0	8.0
4	PH-2x4A	6.0	10.0
5	PH-2x5A	8.0	12.0
6	PH-2x6A	10.0	14.0
7	PH-2x7A	12.0	16.0
8	PH-2x8A	14.0	18.0
9	PH-2x9A	16.0	20.0
10	PH-2x10A	18.0	22.0
11	PH-2x11A	20.0	24.0
12	PH-2x12A	22.0	26.0
13	PH-2x13A	24.0	28.0
14	PH-2x14A	26.0	30.0
15	PH-2x15A	28.0	32.0
16	PH-2x16A	30.0	34.0
17	PH-2x17A	32.0	36.0
18	PH-2x18A	34.0	38.0
19	PH-2x19A	36.0	40.0
20	PH-2x20A	38.0	42.0