CAD GENERATED DRAWING - NO PENCIL CHANGES ALLOWED

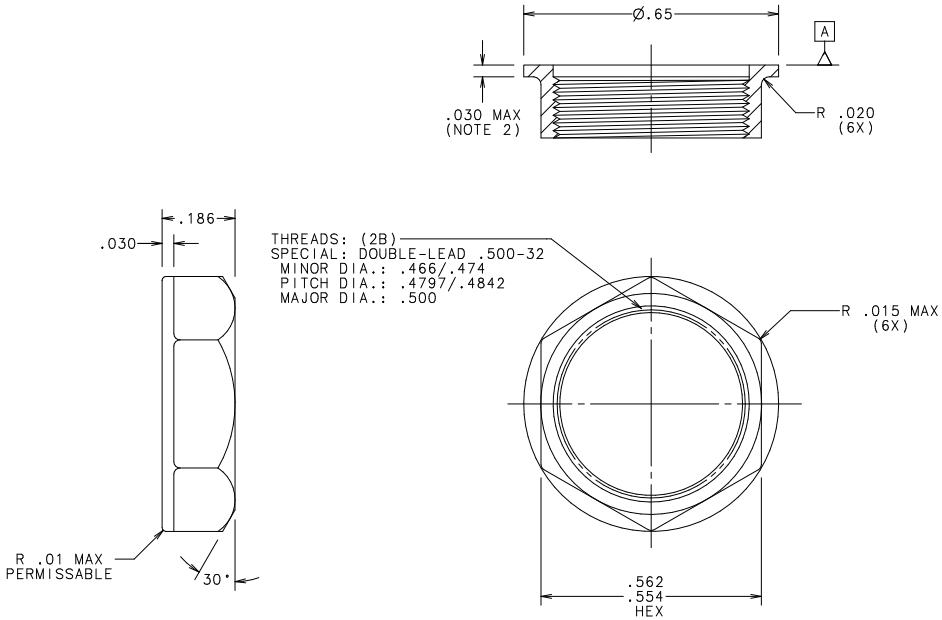

NOTES:

1. NUT IS TO ACCEPT A TORQUE OF 18 LB.-IN. WITHOUT CRACKING OR STRIPPING
2. THE STARTING POINT OF THE LEAD THREAD CANNOT EXCEED .030 FROM SURFACE [A].
3. "FLASH EXTENDING ABOVE SURFACE [A] CANNOT EXCEED .006 HIGH AND .004 THICK.

PACKAGING NOTES:

PLACE IN TOTE -580599 LINED WITH POLY BAG -890-750
LABEL TOTE WITH -914-796 PRINTED PER GENERAL LABEL
SPEC. LS-000003.

UNLESS OTHERWISE SPECIFIED, DIMENSIONS DO NOT INCLUDE PLATING.

C DENOTES CRITICAL CHARACTERISTICS.

CPK DENOTES CPK DIMENSIONS.-MINIMUM CPK VALUE

DENOTES A CHARACTERISTIC THAT PROVIDES AN INDICATION OF PROCESS PERFORMANCE. PROCEDURE FOR MEASUREMENT AND TRACKING TO BE DEFINED IN LITTELFUSE INSPECTION INSTRUCTIONS.

CP DENOTES CP DIMENSIONS.-MINIMUM CP VALUE MUST BE WITHIN THE DIMENSIONAL LIMITATIONS SHOWN ON DRAWING AND INITIALLY LOCATED TO ALLOW FOR MAXIMUM TOOL LIFE.

BILL OF MATERIAL

NO	COMPONENT NO	DESCRIPTION	QTY/M	U/M
1	057295	RYNITE 415 HP	2.25	LB

MATL SPEC

FINISH

COPIES TO: 1 9 18 / 2 10 19 / 3 12 20 / 4 13 21 / 5 14 23 / 6 15 33 / 7 16 43 / 8 17 53

DRW	KAM	DATE 1/23/97	SCALE 4:1
CHK		DATE	SUPER DRW
APPD		DATE	RAW STK WT LBS/M

TOLERANCE UNLESS OTHERWISE SPECIFIED
TWO PLACE DEC ±.01 FRACTION ±
THREE PLACE DEC ±.005 ANGULAR ±1°

TITLE HEX NUT, MOLDED

Littelfuse® DES PLAINES, ILLINOIS 60016

REVISION M DRWG. NO. 903-097

LTR	REVISION	CHK	APD
K	39068C-REVISE & REDRAWN IN NEW STRUCTURE 4/16/98 KAM		
L	39682C-CHG. 0.845 TO .7896 03/22/99 PJM		
M	80635C-CHG .7896 TO 2.25 06/22/00 PJM		

UNCONTROLLED DOCUMENT