# PF-SOCKET-CXA15-18

**Socket with press fit interface. Compatible with MIRELLA-PF and BARBARA-PF for CREE CXA/B 15xx and CXA/B 18xx.**

## TECHNICAL SPECIFICATIONS:

| | |
|---|---|
| Dimensions | Ø 38.0 mm |
| Height | 4.3 mm |
| Fastening | screw |
| ROHS compliant | yes |

## MATERIAL SPECIFICATIONS:

| Component | Type | Material | Colour | Finish |
|---|---|---|---|---|
| PF-SOCKET-CXA15-18 | Base part | PC | white | |

## ORDERING INFORMATION:

| Component | Qty in box | MOQ | MPQ | Box weight (kg) |
|---|---|---|---|---|
| C14115_PF-SOCKET-CXA15-18 | 336 | 28 | 28 | 1.0 |
| » Box size: | | | | |


LEDiL is a registered trademark of LEDiL Oy in the European Union, USA, and certain other countries.

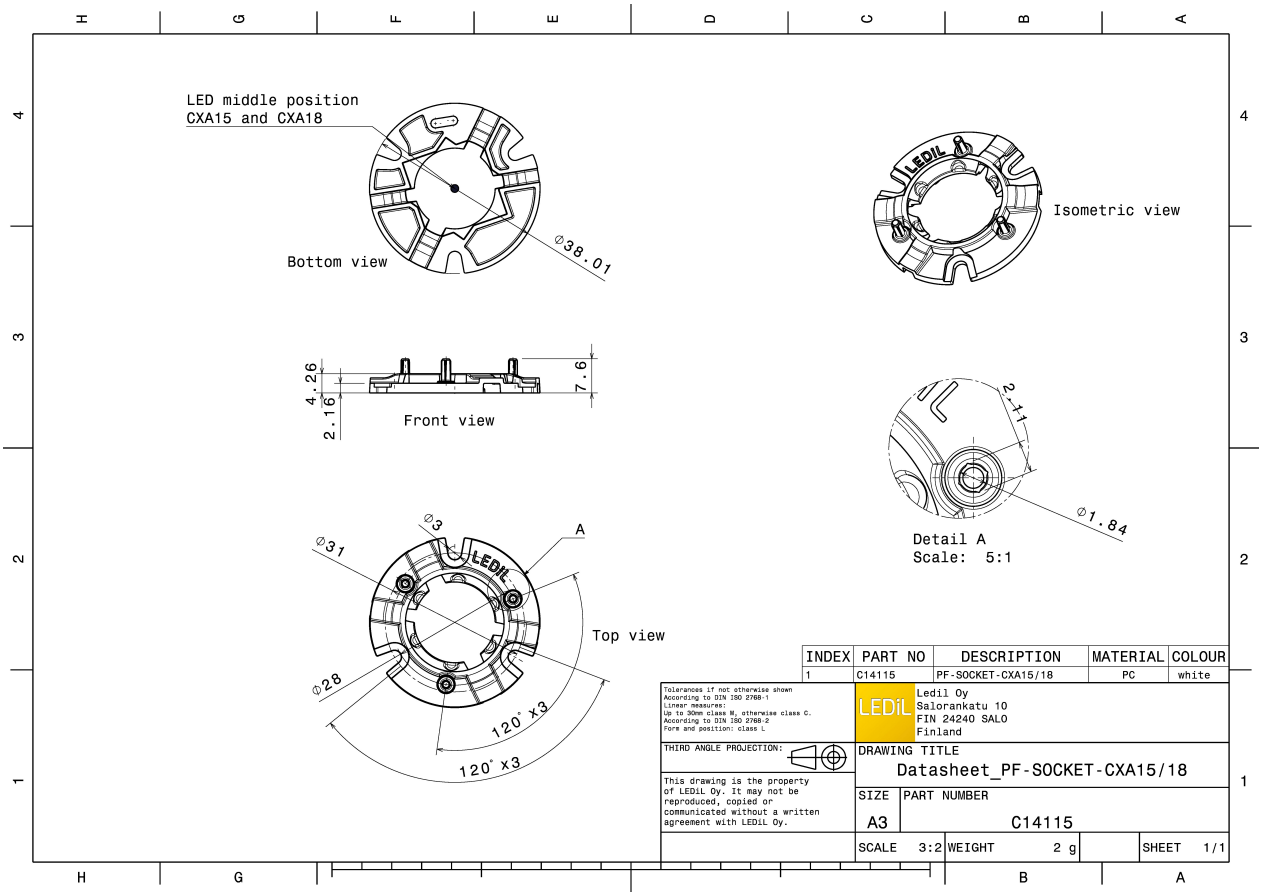



LEDiL is a registered trademark of LEDiL Oy in the European Union, USA, and certain other countries.

## GENERAL INFORMATION:

NOTE: The typical beam angle will be changed by different color, chip size and chip position tolerance. The typical total beam angle is the full angle measured where the luminous intensity is half of the peak value.

## MATERIALS:

As part of our continuous research and improvement processes, and to ensure the best possible quality and availability of our products, LEDiL reserves the right to change material grades without notice.

## PRODUCT DATA USER AGREEMENT AND DISCLAIMER:

The measured data in the provided downloadable LEDiL Product Datasheets and Mechanical 2D-Drawings is rounded and provided as reference for planning. LEDiL Oy's optical specifications have been verified by conducting performance testing of the products in accordance with the company's quality system. The reported data are averaged results of multiple measurements with typical variation. LEDiL Oy reserves the right to without prior notification make changes and improvements to its products.

LEDiL Oy assumes neither warranty, nor guarantee nor any other liability of any kind for the contents and correctness of the provided data. The provided data has been generated with highest diligence but the provided data may in reality not represent the complete possible variation range of all intrinsic parameters. Therefore, in certain cases a deviation from the provided data could occur.

LEDiL Oy reserves the right to undertake technical changes of its products without further notification which could lead to changes in the provided data. LEDiL Oy assumes no liability of any kind for the possible deviation from any provided data or any other damage resulting from the usage of the provided data.

The user agrees to this disclaimer and user agreement with the download or usage of the provided files.

**LEDiL Oy**
Joensuunkatu 13
FI-24240 SALO
Finland

**LEDiL Inc.**
228 West Page Street
Suite D
Sycamore IL 60178
USA

**Local sales and technical support**
www.ledil.com/
where_to_buy

**Shipping locations**
Salo, Finland
Hong Kong, China

**Distribution Partners**
www.ledil.com/
where_to_buy


LEDiL is a registered trademark of LEDiL Oy in the European Union, USA, and certain other countries.