SamHop Microelectronics Corp.

STU/D1255PL

Arp,20 2005 ver1.1

P-Channel Enhancement Mode Field Effect Transistor

PRODUCT SUMMARY		
V_{DSS}	I_D	$R_{DS(ON)}$ (mΩ) Max
-55V	-12A	110 @ V_{GS} = -10V
		145 @ V_{GS} = -4.5V

FEATURES

- Super high dense cell design for low $R_{DS(ON)}$.
- Rugged and reliable.
- TO-252 and TO-251 Package.

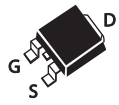

STU SERIES
TO-252AA(D-PAK)

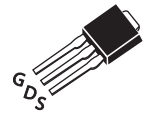

STD SERIES
TO-251(I-PAK)

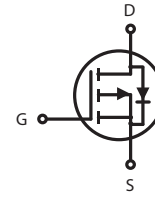

ABSOLUTE MAXIMUM RATINGS (T_A=25°C unless otherwise noted)

Parameter		Symbol	Limit	Unit
Drain-Source Voltage Rating		V_{spike} [d]	60	V
Drain-Source Voltage		V_{DS}	-55	V
Gate-Source Voltage		V_{GS}	±20	V
Drain Current-Continuous [a] @ Ta	25°C	I_D	-12	A
	70°C		-10	A
-Pulsed [b]		I_{DM}	-23	A
Drain-Source Diode Forward Current [a]		I_S	-15	A
Maximum Power Dissipation [a]	Ta= 25°C	P_D	50	W
	Ta=70°C		35	
Operating Junction and Storage Temperature Range		T_J, T_{STG}	-55 to 175	°C

THERMAL CHARACTERISTICS

Thermal Resistance, Junction-to-Case	$R_{\theta JC}$	3	°C/W
Thermal Resistance, Junction-to-Ambient	$R_{\theta JA}$	50	°C/W

STU/D1255PL

ELECTRICAL CHARACTERISTICS (TA =25°C unless otherwise noted)

Parameter	Symbol	Condition	Min	Typ [c]	Max	Unit
OFF CHARACTERISTICS						
Drain-Source Breakdown Voltage	BV_{DSS}	V_{GS} =0V, I_D =-250uA	-55			V
Zero Gate Voltage Drain Current	I_{DSS}	V_{DS} =-44V, V_{GS} =0V			-1	uA
Gate-Body Leakage	I_{GSS}	V_{GS} =±20V, V_{DS} =0V			±100	nA
ON CHARACTERISTICS [b]						
Gate Threshold Voltage	$V_{GS(th)}$	V_{DS} =V_{GS}, I_D = -250uA	-1.3	-1.8	-2.5	V
Drain-Source On-State Resistance	$R_{DS(ON)}$	V_{GS} = -10V, I_D =-10A		95	110	m-ohm
		V_{GS} = -4.5V, I_D = -6A		120	145	m-ohm
On-State Drain Current	$I_{D(ON)}$	V_{DS} = -5V, V_{GS} = -10V	30			A
Forward Transconductance	g_{FS}	V_{DS} = -15V, I_D = -10A		12		S
DYNAMIC CHARACTERISTICS [c]						
Input Capacitance	C_{ISS}	V_{DS} =-30V, V_{GS} = 0V f =1.0MHz		770	885	pF
Output Capacitance	C_{OSS}			80	94	pF
Reverse Transfer Capacitance	C_{RSS}			55	65	pF
SWITCHING CHARACTERISTICS [c]						
Turn-On Delay Time	$t_{D(ON)}$	V_D = -30V, I_D = -1A, V_{GEN} = - 10V, R_{GEN} = 6 ohm		12.3	14	ns
Rise Time	t_r			8.8	10	ns
Turn-Off Delay Time	$t_{D(OFF)}$			51.5	60	ns
Fall Time	t_f			23.1	26	ns
Total Gate Charge	Q_g	V_{DS} =-30V,I_D =-5A,V_{GS} =-10V		13.7	16	nC
		V_{DS} =-30V,I_D =-5A,V_{GS} =-4.5V		6.8	8	nC
Gate-Source Charge	Q_{gs}	V_{DS} =-30V, I_D = -5A, V_{GS} =-10V		2.5	3	nC
Gate-Drain Charge	Q_{gd}			2.8	3.3	nC

STU/D1255PL

ELECTRICAL CHARACTERISTICS (T_A=25°C unless otherwise noted)

Parameter	Symbol	Condition	Min	Typ[c]	Max	Unit
DRAIN-SOURCE DIODE CHARACTERISTICS [b]						
Diode Forward Voltage	V_{SD}	V_{GS} = 0V, Is =-15A		-1	-1.3	V

Notes

a.Surface Mounted on FR4 Board, t≤10sec.

b.Pulse Test:Pulse Width≤300us, Duty Cycle≤2%.

c.Guaranteed by design, not subject to production testing.

d.Guaranteed when external Rg=6 ohm and tf < tf max

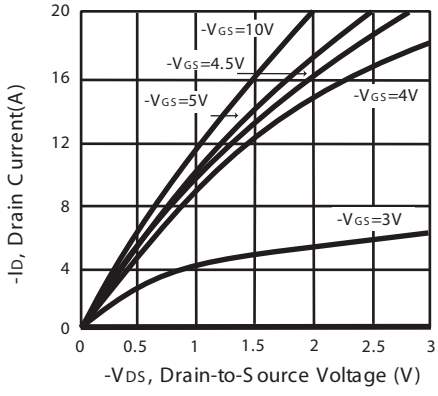

Figure 1. Output Characteristics

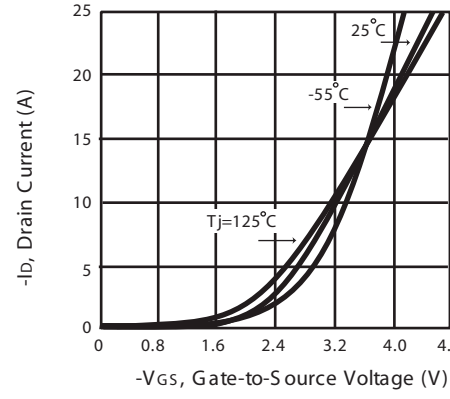

Figure 2. Transfer Characteristics

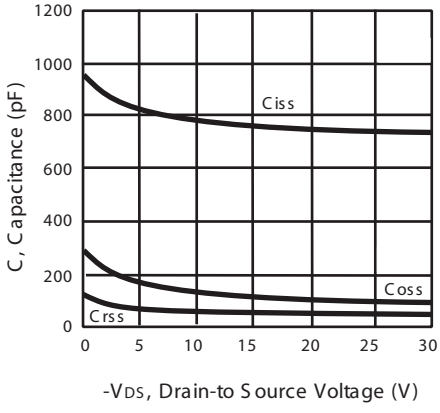

Figure 3. Capacitance

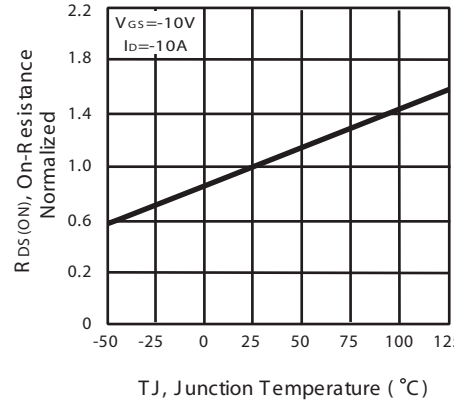

Figure 4. On-Resistance Variation with Temperature

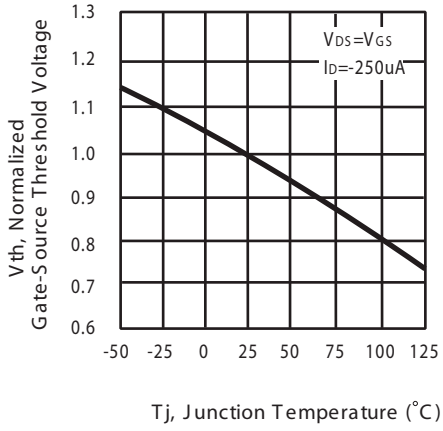

Figure 5. Gate Threshold Variation with Temperature

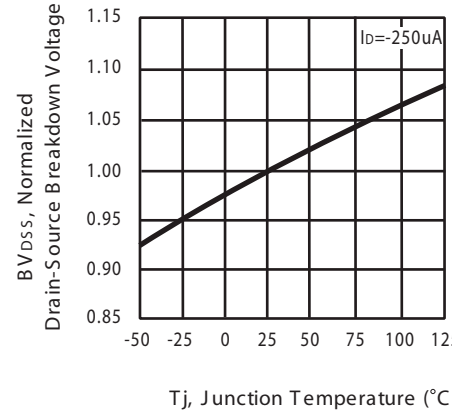

Figure 6. Breakdown Voltage Variation with Temperature

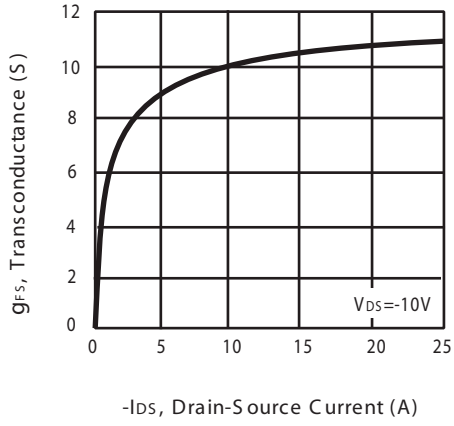

Figure 7. Transconductance Variation with Drain Current

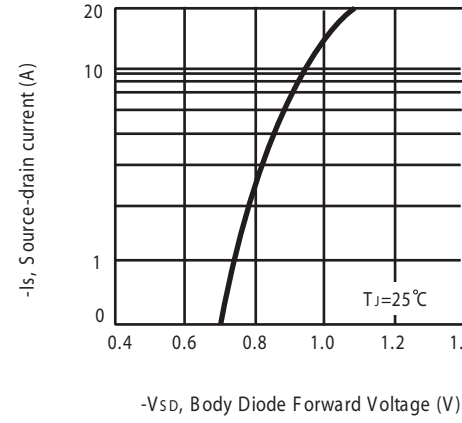

Figure 8. Body Diode Forward Voltage Variation with Source Current

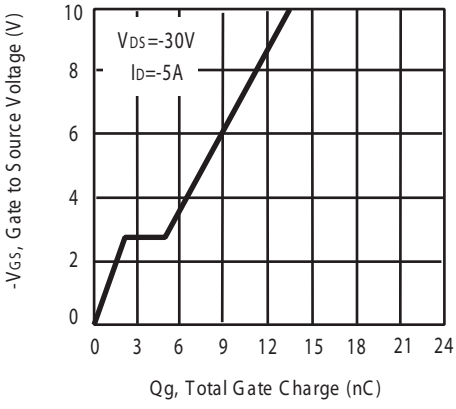

Figure 9. Gate Charge

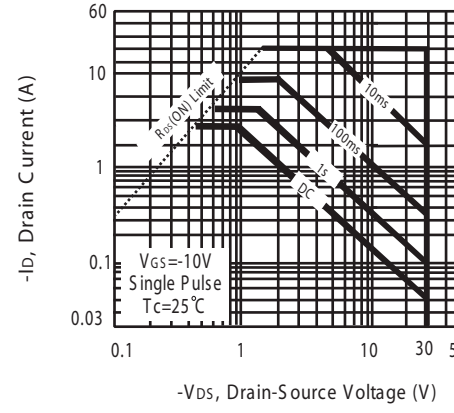

Figure 10. Maximum Safe Operating Area

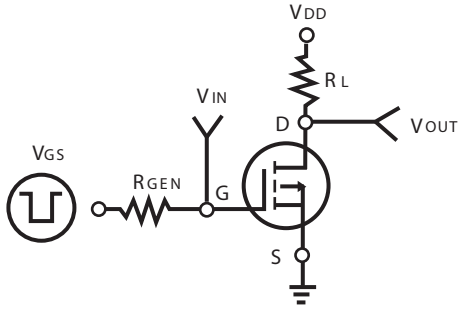

Figure 11. Switching Test Circuit

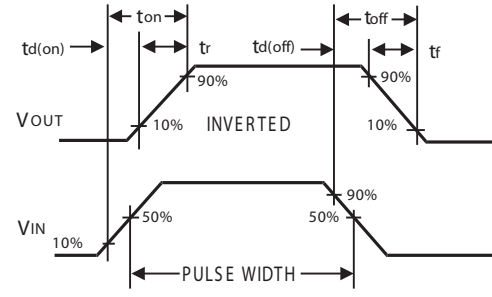

Figure 12. Switching Waveforms

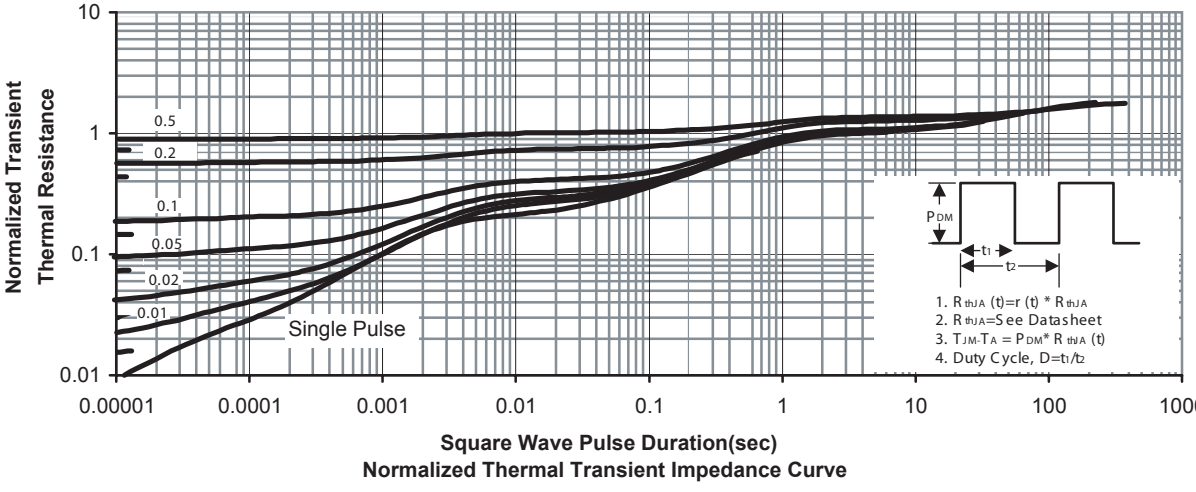

PACKAGE OUTLINE DIMENSIONS

TO-251

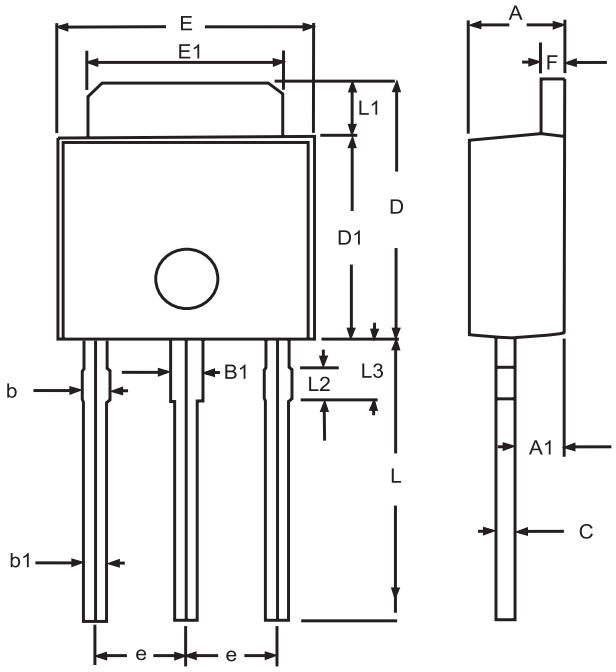

SYMBOLS	MILLIMETERS		INCHES	
	MIN	MAX	MIN	MAX
A	2.20	2.40	0.087	0.095
A1	1.100	1.300	0.043	0.051
B1	0.650	1.050	0.026	0.041
b	0.500	0.900	0.020	0.035
b1	0.400	0.800	0.016	0..32
C	0.400	0.600	0.016	0.024
D	6.700	7.300	0.264	0.287
D1	5.400	5.650	0.213	0.222
E	6.40	6.650	0.252	0.262
e	2.100	2.500	0.083	0.098
F	0.400	0.600	0.016	0.024
L	7.000	8.000	0.276	0.315
L1	1.300	1.700	0.051	0.067
L2	0.700	0.900	0.028	0.035
L3	1.400	1.800	0.055	0.071

STU/D1255PL

PACKAGE OUTLINE DIMENSIONS

TO-252

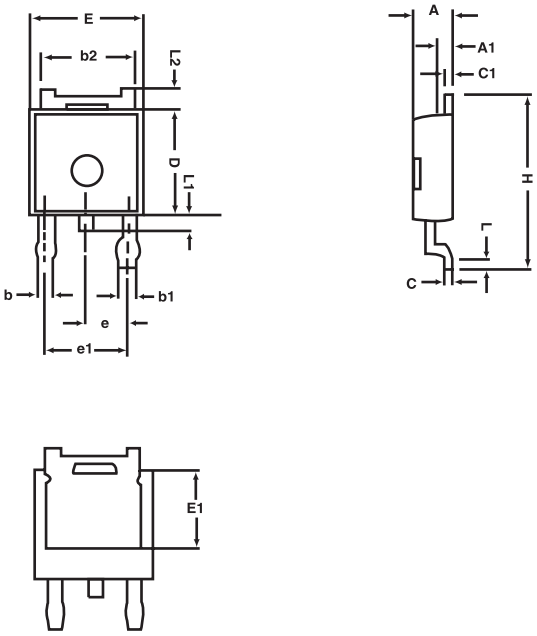

SYMBOLS	MILLIMETERS		INCHES	
	MIN	MAX	MIN	MAX
A	2.25	2.35	0.089	0.093
A1	0.95	1.05	0.037	0.041
b	0.77	0.85	0.030	0.033
b1	0.84	0.94	0.033	0.037
b2	5.30	5.45	0.209	0.215
C	0.49	0.53	0.019	0.021
D	6.00	6.20	0.236	0.244
E	6.40	6.60	0.252	0.260
E1	3.18	3.67	0.125	0.145
e	2.29	BSC	0.090	BSC
H	9.70	10.10	0.382	0.398
L	1.425	1.625	0.056	0.064
L1	0.650	0.850	0.026	0.033
L2	0.600	REF.	0.024	REF.

TO251 Tube/TO-252 Tape and Reel Data

TO-251 Tube

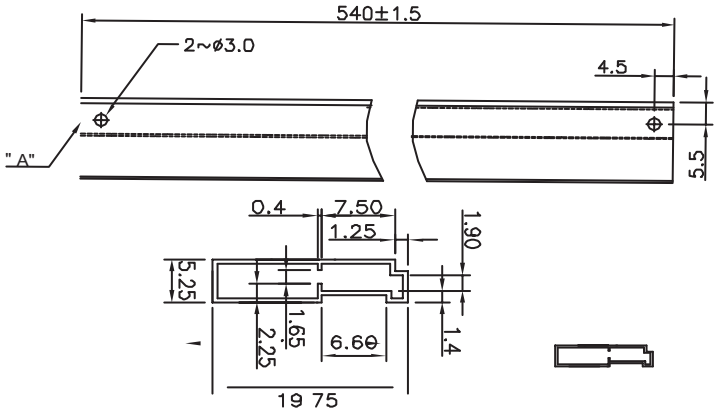

TO-252 Carrier Tape

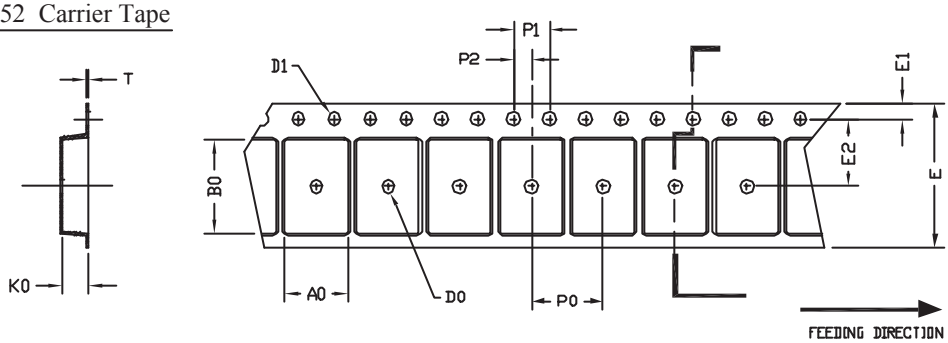

UNIT:mm

PACKAGE	A0	B0	K0	D0	D1	E	E1	E2	P0	P1	P2	T
TO-252 (16 mm)	6.80 ±0.1	10.3 ±0.1	2.50 ±0.1	ϕ2	ϕ1.5 + 0.1 - 0	16.0 0.3±	1.75 0.1±	7.5 ±0.15	8.0 ±0.1	4.0 ±0.1	2.0 ±0.15	0.3 ±0.05

TO-252 Reel

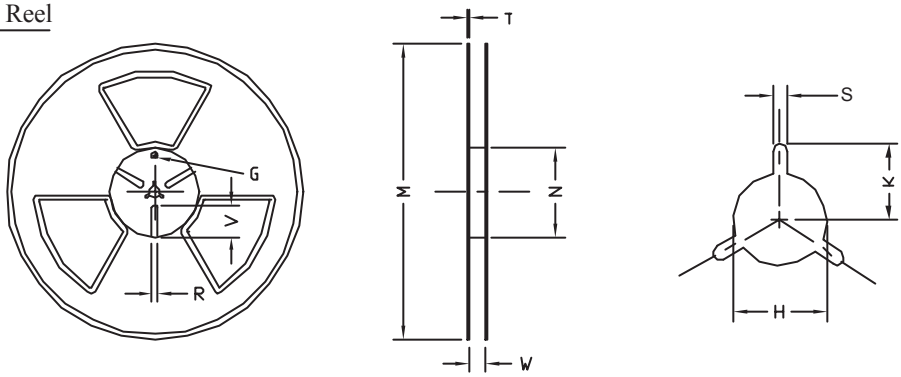

UNIT:mm

TAPE SIZE	REEL SIZE	M	N	W	T	H	K	S	G	R	V
16 mm	ϕ 330	ϕ330 ± 0.5	ϕ97 ± 1.0	17.0 + 1.5 - 0	2.2	ϕ13.0 + 0.5 - 0.2	10.6	2.0 ±0.5	---	---	---