LMC7221 Tiny CMOS Comparator with Rail-To-Rail Input and Open Drain Output

Check for Samples: LMC7221

FEATURES

- **Tiny 5-Pin SOT-23 package saves space**
- **Package is less than 1.43 mm thick**
- **Ensured specs at 2.7V, 5V, 15V supplies**
- **Typical supply current 7 µA at 5V**
- **Response time of 4 µs at 5V**
- **LMC7221—open drain output**
- **Input common-mode range beyond V^- and V^+**
- **Low input current**

APPLICATIONS

- **Mixed voltage battery powered products**
- **Notebooks and PDAs**
- **PCMCIA cards**
- **Mobile communications**
- **Alarm and security circuits**
- **Driving low current LEDs**
- **Direct sensor interface**

DESCRIPTION

The LM7221 is a micropower CMOS comparator available in the space saving 5-Pin SOT-23 package. This makes this comparator ideal for space and weight critical designs. The LMC7221 is also available in the 8-Pin SOIC package. The LMC7221 is supplied in two offset voltage grades, 5 mV and 15 mV.

The open drain output can be pulled up with a resistor to a voltage which can be higher or lower than the supply voltage—this makes the part useful for mixed voltage systems.

For a tiny comparator with a push-pull output, please see the LMC7211 datasheet.

Connection Diagram

8-Pin SOIC - Top View

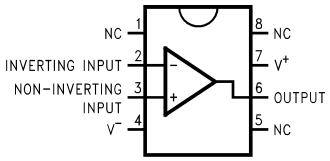

Figure 1. See Package Number D0008A

5-Pin SOT-23 - Top View

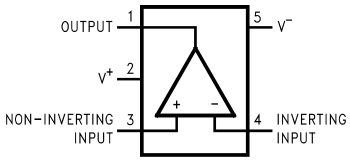

Figure 2. See Package Number DBV0005A

These devices have limited built-in ESD protection. The leads should be shorted together or the device placed in conductive foam during storage or handling to prevent electrostatic damage to the MOS gates.

Please be aware that an important notice concerning availability, standard warranty, and use in critical applications of Texas Instruments semiconductor products and disclaimers thereto appears at the end of this data sheet.

All trademarks are the property of their respective owners.

PRODUCTION DATA information is current as of publication date. Products conform to specifications per the terms of the Texas Instruments standard warranty. Production processing does not necessarily include testing of all parameters.

Copyright © 1999–2013, Texas Instruments Incorporated

Absolute Maximum Ratings [1]

ESD Tolerance [2]	2 kV
Differential Input Voltage	V^+ +0.3V, V^- −0.3V
Voltage at Input	V^+ +0.3V, V^- −0.3V
Voltage at Output Pin	15V
Supply Voltage (V^+–V^-)	16V
Current at Input Pin [3]	±5 mA
Current at Output Pin [4] [5]	±30 mA
Current at Power Supply Pin	40 mA
Lead Temperature (soldering, 10 sec.)	260°C
Junction Temperature [6]	150°C

(1) Absolute Maximum Ratings indicate limits beyond which damage to the device may occur. Operating Ratings indicate conditions for which the device is intended to be functional, but specific performance is not ensured. For ensured specifications and the test conditions, see the Electrical Characteristics.
(2) Human Body Model, applicable std. MIL-STD-883, Method 3015.7. Machine Model, applicable std. JESD22-A115-A (ESD MM std. of JEDEC)Field-Induced Charge-Device Model, applicable std. JESD22-C101-C (ESD FICDM std. of JEDEC).
(3) All limits are specified by testing or statistical analysis.
(4) Applies to both single-supply and split-supply operation. Continuous short circuit operation at elevated ambient temperature can result in exceeding the maximum allowed junction temperature of 150°C. Output currents in excess of ±30 mA may adversely affect reliability.
(5) Limiting input pin current is only necessary for input voltages which exceed the absolute maximum input voltage rating.
(6) The maximum power dissipation is a function of $T_{J(MAX)}$, θ_{JA}. The maximum allowable power dissipation at any ambient temperature is $P_D = (T_{J(MAX)} – T_A)/ \theta_{JA}$. All numbers apply for packages soldered directly onto a PC Board.

Operating Ratings [1]

Supply Voltage	$2.7 \le V_{CC} \le 15V$
Temperature Range [2]	
LMC7221AI, LMC7221BI	−40°C to +85°C
Thermal Resistance (θ_{JA})	
8-Pin SOIC	180°C/W
5-Pin SOT-23	325°C/W

(1) Absolute Maximum Ratings indicate limits beyond which damage to the device may occur. Operating Ratings indicate conditions for which the device is intended to be functional, but specific performance is not ensured. For ensured specifications and the test conditions, see the Electrical Characteristics.
(2) The maximum power dissipation is a function of $T_{J(MAX)}$, θ_{JA}. The maximum allowable power dissipation at any ambient temperature is $P_D = (T_{J(MAX)} – T_A)/ \theta_{JA}$. All numbers apply for packages soldered directly onto a PC Board.

2.7V Electrical Characteristics

Unless otherwise specified, all limits ensured for T_J = 25°C, V^+ = 2.7V, V^- = 0V, $V_{CM} = V_O = V^+/2$. **Boldface** limits apply at the temperature extremes.

Parameter		Test Conditions	Typ [1]	LMC7221AI Limit [2]	LMC7221BI Limit [2]	Units
V_{OS}	Input Offset Voltage		3	5 **8**	15 **18**	mV max
TCV_{OS}	Input Offset Voltage Temperature Drift		1.0			μV/°C
	Input Offset Voltage Average Drift	[3]	3.3			μV/Month
I_B	Input Current		0.04			pA
I_{OS}	Input Offset Current		0.02			pA
CMRR	Common Mode Rejection Ratio	$0V \le V_{CM} \le 2.7V$	75			dB
PSRR	Power Supply Rejection Ratio	$2.7V \le V^+ \le 15V$	80			dB

(1) Typical values represent the most likely parametric norm as determined at the time of characterization. Actual typical values may vary over time and will also depend on the application and configuration. The typical values are not tested and are not ensured on shipped production material.
(2) All limits are specified by testing or statistical analysis.
(3) C_L includes the probe and test jig capacitance.

Copyright © 1999–2013, Texas Instruments Incorporated

2.7V Electrical Characteristics (continued)

Unless otherwise specified, all limits ensured for T_J = 25°C, V^+ = 2.7V, V^- = 0V, V_{CM} = V_O = V^+/2. **Boldface** limits apply at the temperature extremes.

Parameter		Test Conditions	Typ (1)	LMC7221AI Limit (2)	LMC7221BI Limit (2)	Units
A_V	Voltage Gain		100			dB
CMVR	Input Common-Mode Voltage Range	CMRR > 55 dB	3.0	2.9	2.9	V
				2.7	**2.7**	min
		CMRR > 55 dB	−0.3	−0.2	−0.2	V
				0.0	**0.0**	max
V_{OL}	Output Voltage Low	I_{LOAD} = 2.5 mA	0.2	0.3	0.3	V
				0.4	**0.4**	max
I_S	Supply Current	V_{OUT} = Low	7	12	12	µA
				14	**14**	max

5.0V and 15.0V Electrical Characteristics

Unless otherwise specified, all limits ensured for T_J = 25°C, V^+ = 5.0V and 15V, V^- = 0V, V_{CM} = V_O = V^+/2. **Boldface** limits apply at the temperature extremes.

Parameter		Test Conditions	Typ (1)	LMC7221AI Limit (2)	LMC7221BI Limit (2)	Units
V_{OS}	Input Offset Voltage		3	5	15	mV
				8	**18**	max
TCV_{OS}	Input Offset Voltage Temperature Drift	V^+ = 5V	1.0			µV/°C
		V^+ = 15V	4.0			
	Input Offset Voltage Average Drift	V^+ = 5V (3)	3.3			µV/Month
		V^+ = 15V (3)	4.0			
I_B	Input Current		0.04			pA
I_{OS}	Input Offset Current		0.02			pA
CMRR	Common Mode Rejection Ration	V^+ = 5.0V	75			dB
		V^+ = 15.0V	82			dB
PSRR	Power Supply Rejection Ratio	5V ≤ V^+ ≤ 10V	80			dB
A_V	Voltage Gain		100			dB
CMVR	Input Common-Mode Voltage Range	V^+ = 5.0V CMRR > 55 dB	5.3	5.2	5.2	V
				5.0	**5.0**	min
		V^+ = 5.0V CMRR > 55 dB	−0.3	−0.2	−0.2	V
				0.0	**0.0**	max
		V^+ = 15.0V CMRR > 55 dB	15.3	15.2	15.2	V
				15.0	**15.0**	min
		V^+ = 15.0V CMRR > 55 dB	−0.3	−0.2	−0.2	V
				0.0	**0.0**	max
V_{OL}	Output Voltage Low	V^+ = 5V I_{LOAD} = 5 mA	0.2	0.40	0.40	mV
				0.55	**0.55**	max
		V^+ = 15V I_{LOAD} = 5 mA	0.2	0.40	0.40	mV
				0.55	**0.55**	max
I_S	Supply Current	V_{OUT} = Low	7	14	14	µA
				18	**18**	max

(1) Typical values represent the most likely parametric norm as determined at the time of characterization. Actual typical values may vary over time and will also depend on the application and configuration. The typical values are not tested and are not ensured on shipped production material.
(2) All limits are specified by testing or statistical analysis.
(3) C_L includes the probe and test jig capacitance.

Copyright © 1999–2013, Texas Instruments Incorporated

5.0V and 15.0V Electrical Characteristics (continued)

Unless otherwise specified, all limits ensured for T_J = 25°C, V^+ = 5.0V and 15V, V^- = 0V, V_{CM} = V_O = V^+/2. **Boldface** limits apply at the temperature extremes.

Parameter		Test Conditions	Typ (1)	LMC7221AI Limit (2)	LMC7221BI Limit (2)	Units
I_{SC}	Short Circuit Current	Sinking (4)	45			mA

(4) Limiting input pin current is only necessary for input voltages which exceed the absolute maximum input voltage rating.

Leakage Characteristics

T_J = 25°C

Parameter		Test Conditions	Typ (1)	LMC7221AI Limit (2)	LMC7221BI Limit (2)	Units
$I_{LEAKAGE}$	Output Leakage Current	V^+ = 2.7V $V_{IN}(+)$ = 0.5V $V_{IN}(-)$ = 0V V_{OUT} = 15V	0.1	500	500	nA

(1) Typical values represent the most likely parametric norm as determined at the time of characterization. Actual typical values may vary over time and will also depend on the application and configuration. The typical values are not tested and are not ensured on shipped production material.
(2) All limits are specified by testing or statistical analysis.

AC Electrical Characteristics

Unless otherwise specified, all limits ensured for T_J = 25°C, V^+ = 5V, V^- = 0V, V_{CM} = V_O = V^+/2. **Boldface** limits apply at the temperature extreme.

Parameter		Test Conditions		Typ (1)	LMC7221AI Limit (2)	LMC7221BI Limit (2)	Units
t_{rise}	Rise Time	f = 10 kHz, C_L = 50 pF, (3) Overdrive = 10 mV, 5 kΩ Pullup		0.3			µs
t_{fall}	Fall Time	f = 10 kHz, C_L = 50 pF, (3) Overdrive = 10 mV, 5 kΩ Pullup		0.3			µs
t_{PHL}	Propagation Delay (High to Low) (4)	f = 10 kHz, C_L = 50 pF, 5 kΩ Pullup (3)	10 mV	10			µs
			100 mV	4			
		V^+ = 2.7V, f = 10 kHz, C_L = 50 pF, 5 kΩ Pullup (3)	10 mV	10			µs
			100 mV	4			
t_{PLH}	Propagation Delay (Low to High) (4)	f = 10 kHz, C_L = 50 pF, 5 kΩ Pullup (3)	10 mV	6			µs
			100 mV	4			
		V^+ = 2.7V, f = 10 kHz, C_L = 50 pF, 5 kΩ Pullup (3)	10 mV	7			µs
			100 mV	4			

(1) Typical values represent the most likely parametric norm as determined at the time of characterization. Actual typical values may vary over time and will also depend on the application and configuration. The typical values are not tested and are not ensured on shipped production material.
(2) All limits are specified by testing or statistical analysis.
(3) Do not short circuit the output to V^+ when V^+ is greater than 12V or reliability will be adversely affected.
(4) Input offset voltage average drift is calculated by dividing the accelerated operating life V_{OS} drift by the equivalent operational time. This represents worst case input conditions and includes the first 30 days of drift.

Copyright © 1999–2013, Texas Instruments Incorporated

Typical Performance Characteristics

Supply Current vs. Supply Voltage

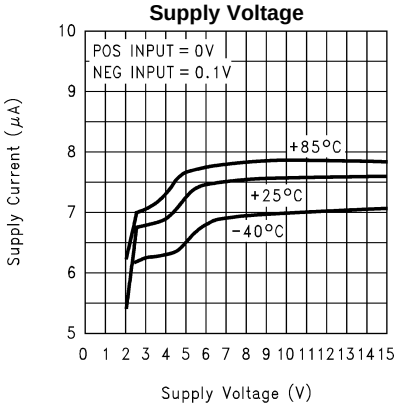

Figure 3.

Supply Current vs. Temperature while Sinking

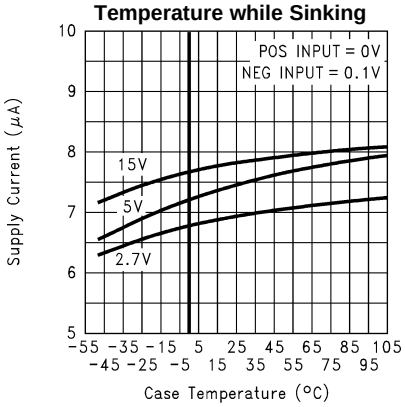

Figure 4.

Output Sinking Current vs. Supply Voltage

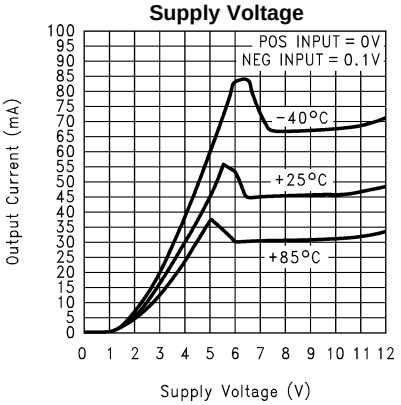

Figure 5.

Output Sinking Current vs. Output Voltage @ 5V

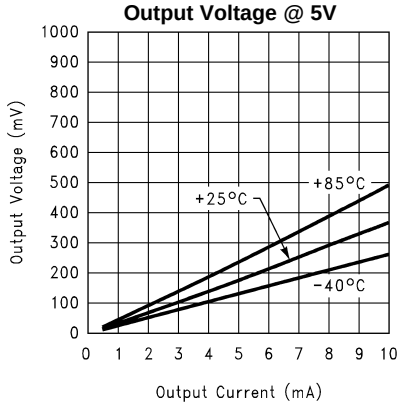

Figure 6.

Output Sinking Current vs. Output Voltage @ 15V

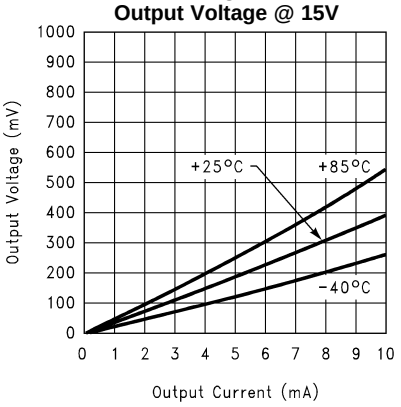

Figure 7.

Response Time for Various Input Overdrives −t_{PHL}

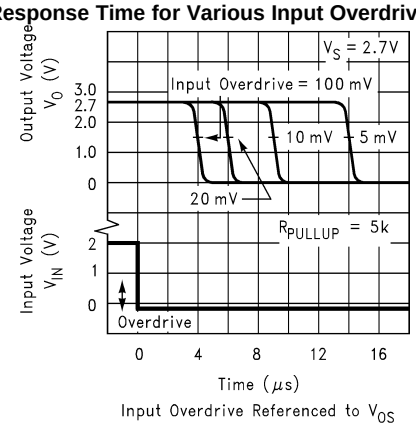

Figure 8.

Typical Performance Characteristics (continued)

Response Time vs. Various Input Overdrives −t_{PHL}

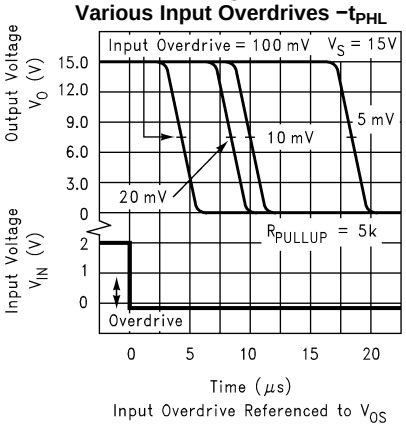

Figure 9.

Response Time vs Various Input Overdrives −t_{PHL}

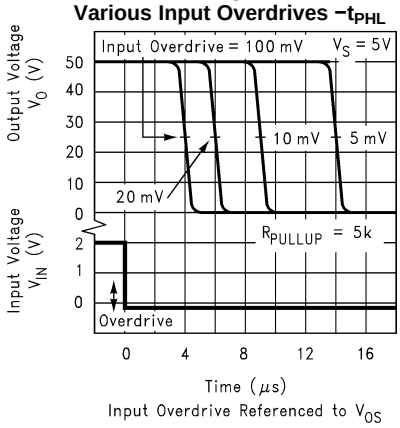

Figure 10.

Input Bias Current vs. Common Mode Voltage

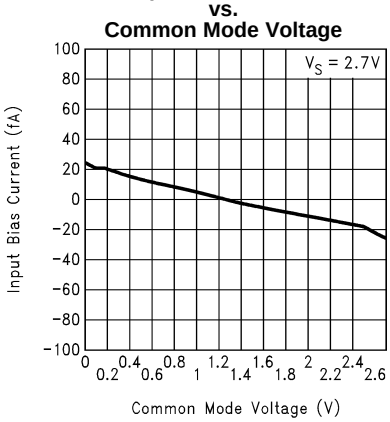

Figure 11.

Input Bias Current vs. Common Mode Voltage

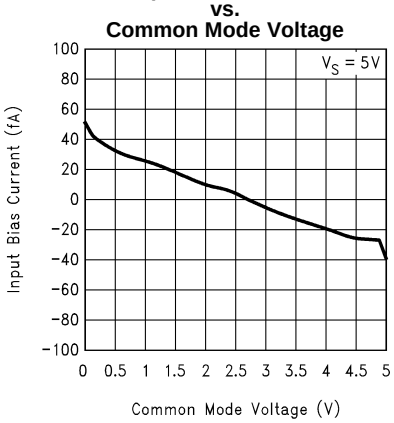

Figure 12.

Input Bias Current vs. Common Mode Voltage

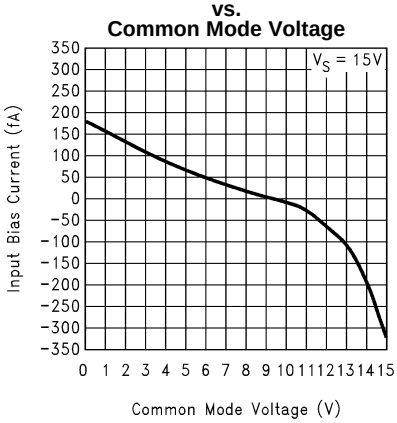

Figure 13.

Input Bias Current vs. Temperature

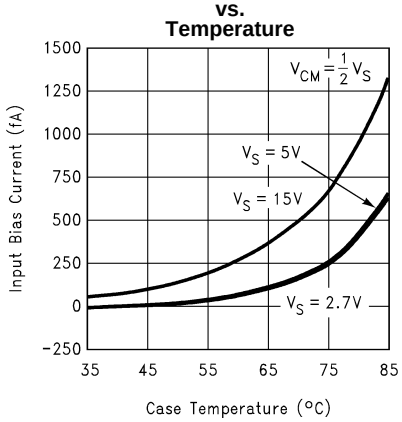

Figure 14.

Copyright © 1999–2013, Texas Instruments Incorporated

Typical Performance Characteristics (continued)

Leakage Current vs. Supply Voltage

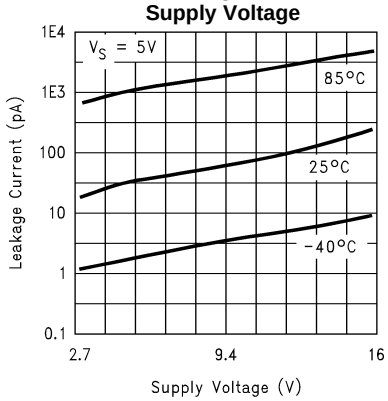

Figure 15.

APPLICATION INFORMATION

BENEFITS OF THE LMC7221 TINY COMPARATOR

Size

The small footprint of the 5-Pin SOT-23 packaged Tiny Comparator, (0.120 x 0.118 inches, 3.05 x 3.00 mm) saves space on printed circuit boards, and enable the design of smaller electronic products. Because they are easier to carry, many customers prefer smaller and lighter products.

Height

The height (0.056 inches, 1.43 mm) of the Tiny Comparator makes it possible to use it in PCMCIA type III cards.

Simplified Board Layout

The Tiny Comparator can simplify board layout in several ways. First, by placing a comparator where comparators are needed, instead of routing signals to a dual or quad device, long pc traces may be avoided.

By using multiple Tiny Comparators instead of duals or quads, complex signal routing and possibly crosstalk can be reduced.

Low Supply Current

The typical 7 µA supply current of the LMC7221 extends battery life in portable applications, and may allow the reduction of the size of batteries in some applications.

Wide Voltage Range

The LMC7221 is characterized at 15V, 5V and 2.7V. Performance data is provided at these popular voltages. This wide voltage range makes the LMC7221 a good choice for devices where the voltage may vary over the life of the batteries.

Digital Outputs Representing Signal Level

Comparators provide a high or low digital output depending on the voltage levels of the (+) and (−) inputs. This makes comparators useful for interfacing analog signals to microprocessors and other digital circuits. The LMC7221 can be thought of as a one-bit a/d converter.

Open Drain Output

The open drain output is like the open collector output of a logic gate. This makes the LMC7221 very useful for mixed voltage systems.

Copyright © 1999–2013, Texas Instruments Incorporated

Driving LEDs (Light Emitting Diodes)

With a 5 volt power supply, the LMC7221's output sinking current can drive small, high efficiency LEDs for indicator and test point circuits. The small size of the Tiny package makes it easy to find space to add this feature to even compact designs.

Input range to Beyond Rail to Rail

The input common mode range of the LMC7221 is slightly larger than the actual power supply range. This wide input range means that the comparator can be used to sense signals close to the power supply rails. This wide input range can make design easier by eliminating voltage dividers, amplifiers, and other front end circuits previously used to match signals to the limited input range of earlier comparators. This is useful to power supply monitoring circuits which need to sense their own power supply, and compare it to a reference voltage which is close to the power supply voltage. The wide input range can also be useful for sensing the voltage drop across a current sense resistor for battery chargers.

Zero Crossing Detector

Since the LMC7221's common mode input range extends below ground even when powered by a single positive supply, it can be used with large input resistors as a zero crossing detector.

Low Input Currents and High Input Impedance

These characteristics allow the LMC7221 to be used to sense high impedance signals from sensors. They also make it possible to use the LMC7221 in timing circuits built with large value resistors. This can reduce the power dissipation of timing circuits. For very long timing circuits, using high value resistors can reduce the size and cost of large value capacitors for the same R-C time constant.

Direct Sensor Interfacing

The wide input voltage range and high impedance of the LMC7221 may make it possible to directly interface to a sensor without the use of amplifiers or bias circuits. In circuits with sensors which can produce outputs in the tens to hundreds of millivolts, the LMC7221 can compare the sensor signal with an appropriately small reference voltage. This may be done close to ground or the positive supply rail. Direct sensor interfacing may eliminate the need for an amplifier for the sensor signal. Eliminating the amplifier can save cost, space, and design time.

LOW VOLTAGE OPERATION

Comparators are the common devices by which analog signals interface with digital circuits. The LMC7221 has been designed to operate at supply voltages of 2.7V without sacrificing performance to meet the demands of 3V digital systems.

At supply voltages of 2.7V, the common-mode voltage range extends 200 mV (ensured) below the negative supply. This feature, in addition to the comparator being able to sense signals near the positive rail, is extremely useful in low voltage applications.

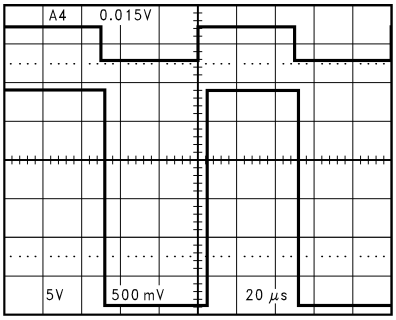

Figure 16. Even at Low-Supply Voltage of 2.7V, an Input Signal which Exceeds the Supply Voltages Produces No Phase Inversion at the Output

At V^+ = 2.7V propagation delays are t_{PLH} = 4 μs and t_{PHL} = 4 μs with overdrives of 100 mV.

Please refer to the performance curves for more extensive characterization.

Copyright © 1999–2013, Texas Instruments Incorporated

OPEN DRAIN OUTPUT

Output Stage

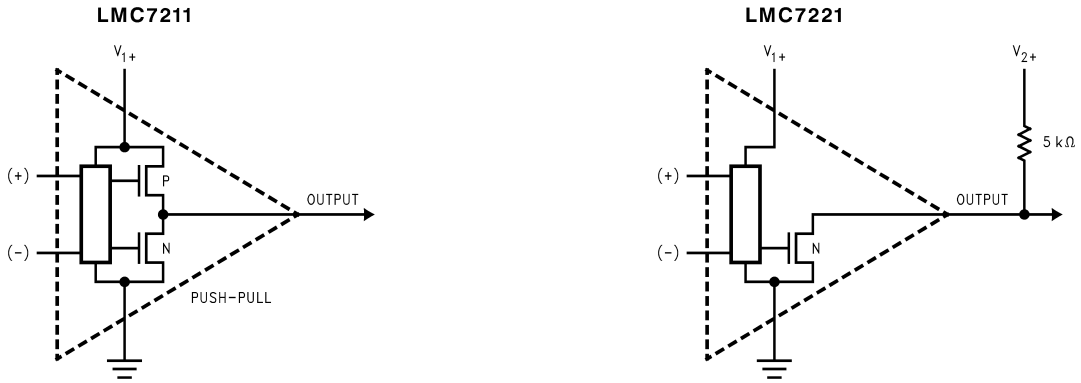

Figure 17. Output Stage

Figure 17 shows the difference between push-pull output and open drain output.

Push pull outputs will have a conventional high or low digital output, the same as a logic gate. Low will be the negative supply rail (usually ground) and high will be the positive supply rail.

This is useful if the chips you are interfacing to run on the same supply voltage as the comparator. An example would be an all +5V system.

Open drain outputs will only pull low—for the high output they depend on an external pull-up resistor. This can pull up to a voltage higher or lower than the comparator supply voltage. This voltage can be as high as 15V. This makes the open drain parts useful in mixed voltage systems. An example would be where the comparator runs at 5V and the logic circuits are at 3.3V. The pull-up resistor would go to the 3.3V supply.

Open drain outputs are the CMOS equivalent of open collector outputs.

OUTPUT SHORT CIRCUIT CURRENT

The LMC7221 has short circuit protection of 40 mA. However, it is not designed to withstand continuous short circuits, transient voltage or current spikes, or shorts to any voltage beyond the supplies. A resistor in series with the output should reduce the effect of shorts. For outputs which send signals off PC boards additional protection devices, such as diodes to the supply rails, and varistors may be used.

INPUT PROTECTION

If input signals are likely to exceed the common mode range of the LMC7221, or it is likely that signals may be present when power is off, damage to the LMC7221 may occur. Large value (100 kΩ to MΩ) input resistors may reduce the likelihood of damage by limiting the input currents. Since the LMC7221 has very low input leakage currents, the effect on accuracy will be small. Additional protection may require the use of diodes, as shown in *Figure 18*. Note that diode leakage current may affect accuracy during normal operation.

The R-C time constant of R_{IN} and the diode capacitance may also slow response time.

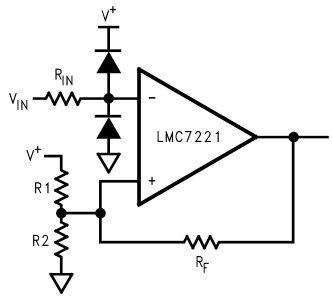

Figure 18.

LAYOUT CONSIDERATIONS

The LMC7221 is not an especially fast comparator, so high speed design practices are not required. The LMC7221 is capable of operating with very high impedance inputs, so precautions should be taken to reduce noise pickup with high impedance (~ 100 kΩ and greater) designs and in electrically noisy environments.

Keeping high value resistors close to the LMC7221 and minimizing the size of the input nodes is a good practice. With multilayer designs, try to avoid long loops which could act as inductors (coils). Sensors which are not close to the comparator may need twisted pair or shielded connections to reduce noise.

PUSH-PULL OUTPUTS, DUAL VERSIONS

The LMC7211 is a comparator similar to the LMC7221, but with push-pull outputs which can source current.

The performance of the LMC7221 is available in a dual device. Please see the LMC6772 datasheet. For a dual device with push-pull outputs, please see the LMC6762 datasheet.

Rail-to-Rail Input Low Power Comparators—

	Push-Pull Output	
LMC7221	5-Pin SOT-23, 8-Pin SOIC	Single
LMC6762	8-Pin SOIC	Dual
	Open Drain Output	
LMC7221	5-Pin SOT-23, 8-Pin SOIC	Single
LMC6772	8-Pin SOIC	Dual

ADDITIONAL 5-Pin SOT-23 TINY DEVICES

TI has additional parts available in the space saving SOT-23 Tiny package, including amplifiers, voltage references, and voltage regulators, including the following:

LMC7101	1 MHz gain-bandwidth rail-to-rail input and output amplifier—high input impedance and high gain 700 µA typical current 2.7V, 3V, 5V and 15V specifications.
LMC7111	Low power 50 kHz gain-bandwidth rail-to-rail input and output amplifier with 25 µA typical current specified at 2.7V, 3.0V, 3.3V, 5V and 10V.
LM7131	Tiny Video amp with 70 MHz gain bandwidth 3V, 5V and ±5V specifications.
LP2980	Micropower SOT 50 mA Ultra Low-Dropout Regulator.
LM4040	Precision micropower shunt voltage reference. Fixed voltages of 2.500V, 4.096V, 5.000V, 8.192V and 10.000V.
LM4041	Precision micropower shut voltage reference 1.225V and adjustable.
LM385	Low current voltage reference. Fixed Voltages of 1.2V and 2.5V.

 Copyright © 1999–2013, Texas Instruments Incorporated

Contact your TI representative for the latest information.

SPICE MACROMODEL

A Spice Macromodel is available for the LMC7221 comparator on the TI Amplifier Macromodel disk. Contact your TI representative to obtain the latest version.

REVISION HISTORY

Changes from Revision D (March 2013) to Revision E	Page
• Changed layout of National Data Sheet to TI format	11

Copyright © 1999–2013, Texas Instruments Incorporated

PACKAGING INFORMATION

Orderable Device	Status (1)	Package Type	Package Drawing	Pins	Package Qty	Eco Plan (2)	Lead/Ball Finish (6)	MSL Peak Temp (3)	Op Temp (°C)	Device Marking (4/5)	Samples
LMC7221AIM	NRND	SOIC	D	8	95	TBD	Call TI	Call TI	-40 to 85	LMC72 21AIM	
LMC7221AIM/NOPB	ACTIVE	SOIC	D	8	95	Green (RoHS & no Sb/Br)	SN | CU SN	Level-1-260C-UNLIM	-40 to 85	LMC72 21AIM	Samples
LMC7221AIM5	NRND	SOT-23	DBV	5	1000	TBD	Call TI	Call TI	-40 to 85	C01A	
LMC7221AIM5/NOPB	ACTIVE	SOT-23	DBV	5	1000	Green (RoHS & no Sb/Br)	CU SN	Level-1-260C-UNLIM	-40 to 85	C01A	Samples
LMC7221AIM5X	NRND	SOT-23	DBV	5	3000	TBD	Call TI	Call TI	-40 to 85	C01A	
LMC7221AIM5X/NOPB	ACTIVE	SOT-23	DBV	5	3000	Green (RoHS & no Sb/Br)	CU SN	Level-1-260C-UNLIM	-40 to 85	C01A	Samples
LMC7221AIMX	NRND	SOIC	D	8	2500	TBD	Call TI	Call TI	-40 to 85	LMC72 21AIM	
LMC7221AIMX/NOPB	ACTIVE	SOIC	D	8	2500	Green (RoHS & no Sb/Br)	SN | CU SN	Level-1-260C-UNLIM	-40 to 85	LMC72 21AIM	Samples
LMC7221BIM	NRND	SOIC	D	8	95	TBD	Call TI	Call TI	-40 to 85	LMC72 21BIM	
LMC7221BIM/NOPB	ACTIVE	SOIC	D	8	95	Green (RoHS & no Sb/Br)	SN | CU SN	Level-1-260C-UNLIM	-40 to 85	LMC72 21BIM	Samples
LMC7221BIM5	NRND	SOT-23	DBV	5	1000	TBD	Call TI	Call TI	-40 to 85	C01B	
LMC7221BIM5/NOPB	ACTIVE	SOT-23	DBV	5	1000	Green (RoHS & no Sb/Br)	CU SN	Level-1-260C-UNLIM	-40 to 85	C01B	Samples
LMC7221BIM5X	NRND	SOT-23	DBV	5	3000	TBD	Call TI	Call TI	-40 to 85	C01B	
LMC7221BIM5X/NOPB	ACTIVE	SOT-23	DBV	5	3000	Green (RoHS & no Sb/Br)	CU SN	Level-1-260C-UNLIM	-40 to 85	C01B	Samples
LMC7221BIMX	NRND	SOIC	D	8	2500	TBD	Call TI	Call TI	-40 to 85	LMC72 21BIM	
LMC7221BIMX/NOPB	ACTIVE	SOIC	D	8	2500	Green (RoHS & no Sb/Br)	SN | CU SN	Level-1-260C-UNLIM	-40 to 85	LMC72 21BIM	Samples

(1) The marketing status values are defined as follows:
ACTIVE: Product device recommended for new designs.
LIFEBUY: TI has announced that the device will be discontinued, and a lifetime-buy period is in effect.
NRND: Not recommended for new designs. Device is in production to support existing customers, but TI does not recommend using this part in a new design.
PREVIEW: Device has been announced but is not in production. Samples may or may not be available.
OBSOLETE: TI has discontinued the production of the device.

(2) Eco Plan - The planned eco-friendly classification: Pb-Free (RoHS), Pb-Free (RoHS Exempt), or Green (RoHS & no Sb/Br) - please check http://www.ti.com/productcontent for the latest availability information and additional product content details.
TBD: The Pb-Free/Green conversion plan has not been defined.
Pb-Free (RoHS): TI's terms "Lead-Free" or "Pb-Free" mean semiconductor products that are compatible with the current RoHS requirements for all 6 substances, including the requirement that lead not exceed 0.1% by weight in homogeneous materials. Where designed to be soldered at high temperatures, TI Pb-Free products are suitable for use in specified lead-free processes.
Pb-Free (RoHS Exempt): This component has a RoHS exemption for either 1) lead-based flip-chip solder bumps used between the die and package, or 2) lead-based die adhesive used between the die and leadframe. The component is otherwise considered Pb-Free (RoHS compatible) as defined above.
Green (RoHS & no Sb/Br): TI defines "Green" to mean Pb-Free (RoHS compatible), and free of Bromine (Br) and Antimony (Sb) based flame retardants (Br or Sb do not exceed 0.1% by weight in homogeneous material)

(3) MSL, Peak Temp. - The Moisture Sensitivity Level rating according to the JEDEC industry standard classifications, and peak solder temperature.

(4) There may be additional marking, which relates to the logo, the lot trace code information, or the environmental category on the device.

(5) Multiple Device Markings will be inside parentheses. Only one Device Marking contained in parentheses and separated by a "~" will appear on a device. If a line is indented then it is a continuation of the previous line and the two combined represent the entire Device Marking for that device.

(6) Lead/Ball Finish - Orderable Devices may have multiple material finish options. Finish options are separated by a vertical ruled line. Lead/Ball Finish values may wrap to two lines if the finish value exceeds the maximum column width.

Important Information and Disclaimer: The information provided on this page represents TI's knowledge and belief as of the date that it is provided. TI bases its knowledge and belief on information provided by third parties, and makes no representation or warranty as to the accuracy of such information. Efforts are underway to better integrate information from third parties. TI has taken and continues to take reasonable steps to provide representative and accurate information but may not have conducted destructive testing or chemical analysis on incoming materials and chemicals. TI and TI suppliers consider certain information to be proprietary, and thus CAS numbers and other limited information may not be available for release.

In no event shall TI's liability arising out of such information exceed the total purchase price of the TI part(s) at issue in this document sold by TI to Customer on an annual basis.

TAPE AND REEL INFORMATION

REEL DIMENSIONS

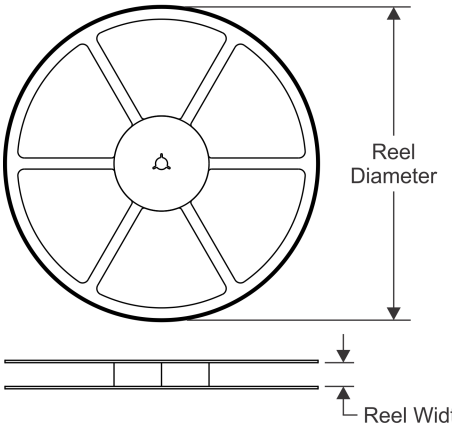

TAPE DIMENSIONS

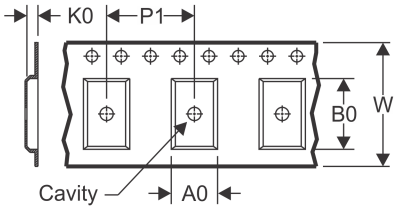

A0	Dimension designed to accommodate the component width
B0	Dimension designed to accommodate the component length
K0	Dimension designed to accommodate the component thickness
W	Overall width of the carrier tape
P1	Pitch between successive cavity centers

QUADRANT ASSIGNMENTS FOR PIN 1 ORIENTATION IN TAPE

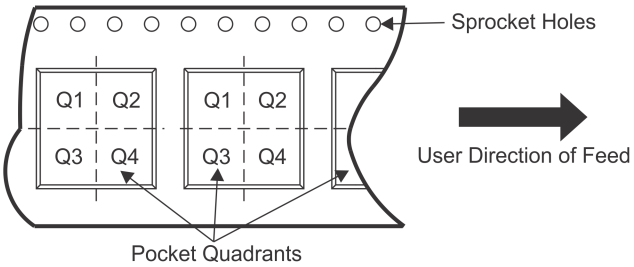

*All dimensions are nominal

Device	Package Type	Package Drawing	Pins	SPQ	Reel Diameter (mm)	Reel Width W1 (mm)	A0 (mm)	B0 (mm)	K0 (mm)	P1 (mm)	W (mm)	Pin1 Quadrant
LMC7221AIM5	SOT-23	DBV	5	1000	178.0	8.4	3.2	3.2	1.4	4.0	8.0	Q3
LMC7221AIM5/NOPB	SOT-23	DBV	5	1000	178.0	8.4	3.2	3.2	1.4	4.0	8.0	Q3
LMC7221AIM5X	SOT-23	DBV	5	3000	178.0	8.4	3.2	3.2	1.4	4.0	8.0	Q3
LMC7221AIM5X/NOPB	SOT-23	DBV	5	3000	178.0	8.4	3.2	3.2	1.4	4.0	8.0	Q3
LMC7221AIMX	SOIC	D	8	2500	330.0	12.4	6.5	5.4	2.0	8.0	12.0	Q1
LMC7221AIMX/NOPB	SOIC	D	8	2500	330.0	12.4	6.5	5.4	2.0	8.0	12.0	Q1
LMC7221BIM5	SOT-23	DBV	5	1000	178.0	8.4	3.2	3.2	1.4	4.0	8.0	Q3
LMC7221BIM5/NOPB	SOT-23	DBV	5	1000	178.0	8.4	3.2	3.2	1.4	4.0	8.0	Q3
LMC7221BIM5X	SOT-23	DBV	5	3000	178.0	8.4	3.2	3.2	1.4	4.0	8.0	Q3
LMC7221BIM5X/NOPB	SOT-23	DBV	5	3000	178.0	8.4	3.2	3.2	1.4	4.0	8.0	Q3
LMC7221BIMX	SOIC	D	8	2500	330.0	12.4	6.5	5.4	2.0	8.0	12.0	Q1
LMC7221BIMX/NOPB	SOIC	D	8	2500	330.0	12.4	6.5	5.4	2.0	8.0	12.0	Q1

TAPE AND REEL BOX DIMENSIONS

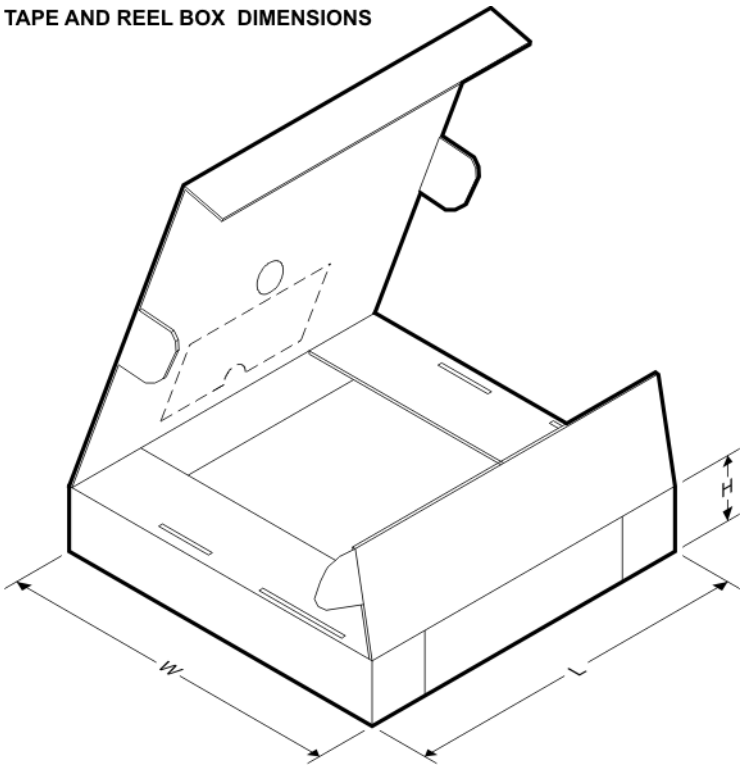

*All dimensions are nominal

Device	Package Type	Package Drawing	Pins	SPQ	Length (mm)	Width (mm)	Height (mm)
LMC7221AIM5	SOT-23	DBV	5	1000	210.0	185.0	35.0
LMC7221AIM5/NOPB	SOT-23	DBV	5	1000	210.0	185.0	35.0
LMC7221AIM5X	SOT-23	DBV	5	3000	210.0	185.0	35.0
LMC7221AIM5X/NOPB	SOT-23	DBV	5	3000	210.0	185.0	35.0
LMC7221AIMX	SOIC	D	8	2500	367.0	367.0	35.0
LMC7221AIMX/NOPB	SOIC	D	8	2500	367.0	367.0	35.0
LMC7221BIM5	SOT-23	DBV	5	1000	210.0	185.0	35.0
LMC7221BIM5/NOPB	SOT-23	DBV	5	1000	210.0	185.0	35.0
LMC7221BIM5X	SOT-23	DBV	5	3000	210.0	185.0	35.0
LMC7221BIM5X/NOPB	SOT-23	DBV	5	3000	210.0	185.0	35.0
LMC7221BIMX	SOIC	D	8	2500	367.0	367.0	35.0
LMC7221BIMX/NOPB	SOIC	D	8	2500	367.0	367.0	35.0

DBV (R–PDSO–G5) PLASTIC SMALL–OUTLINE PACKAGE

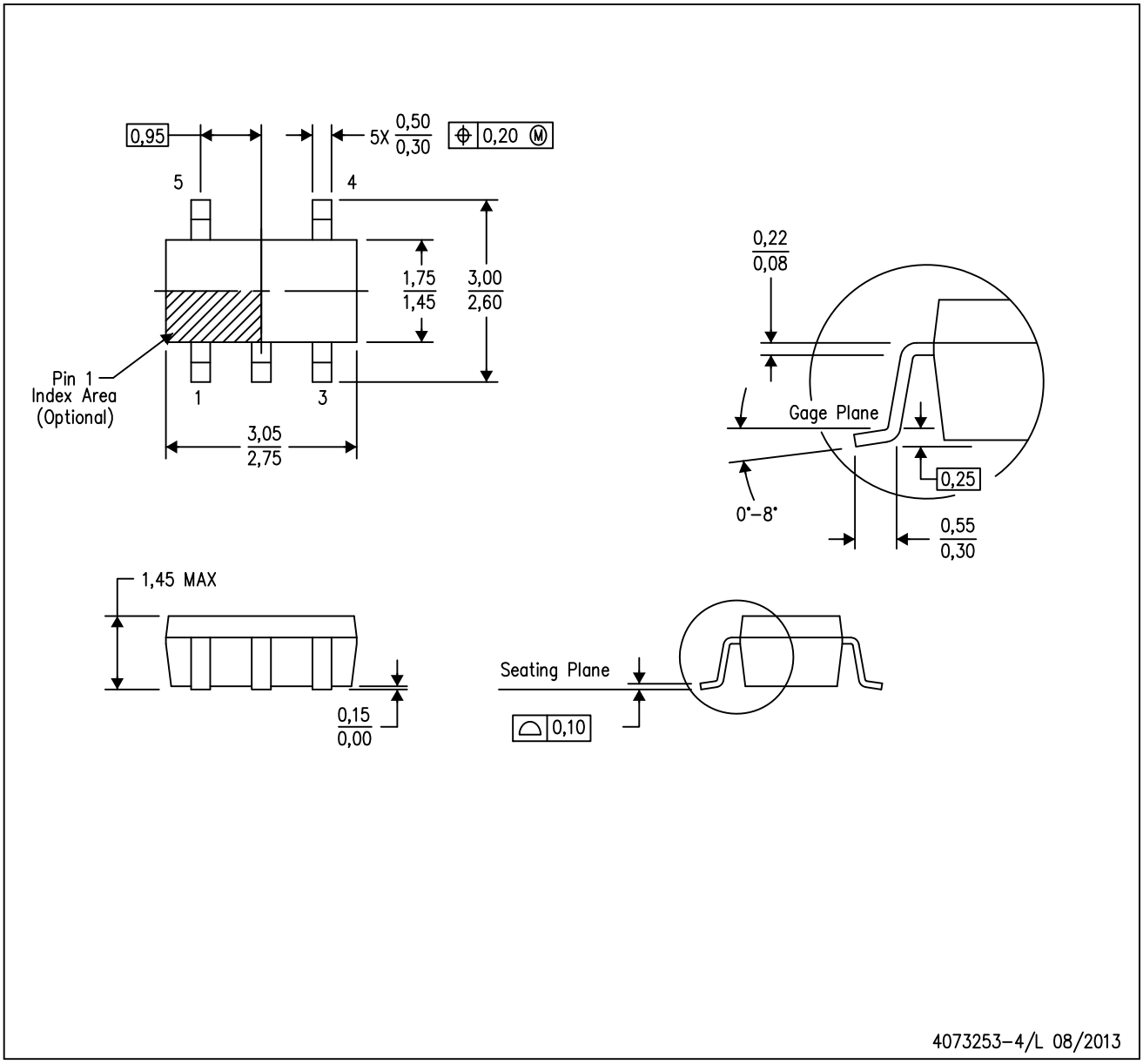

NOTES:
A. All linear dimensions are in millimeters.
B. This drawing is subject to change without notice.
C. Body dimensions do not include mold flash or protrusion. Mold flash and protrusion shall not exceed 0.15 per side.
D. Falls within JEDEC MO–178 Variation AA.

DBV (R-PDSO-G5) PLASTIC SMALL OUTLINE

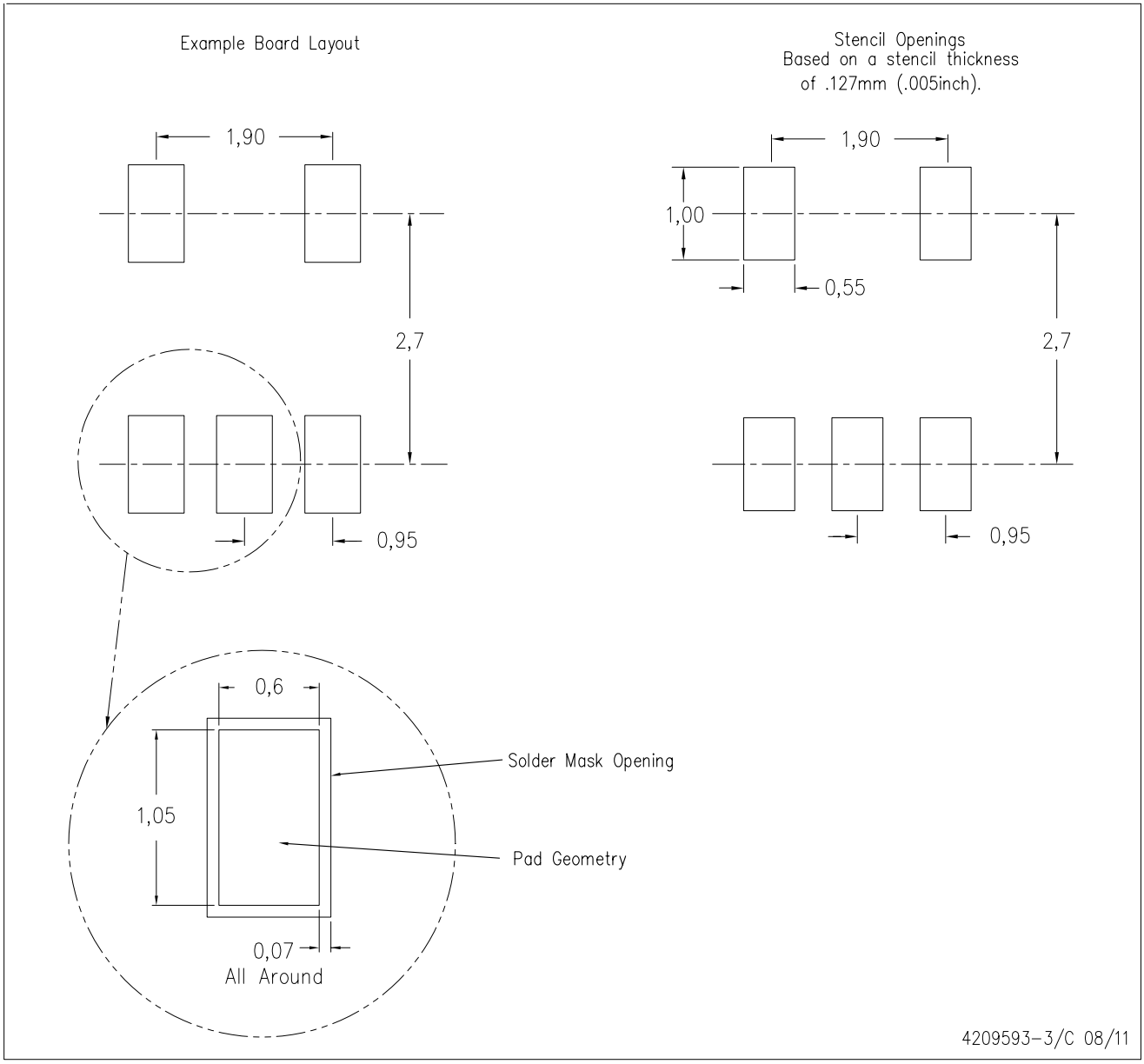

NOTES:
A. All linear dimensions are in millimeters.
B. This drawing is subject to change without notice.
C. Customers should place a note on the circuit board fabrication drawing not to alter the center solder mask defined pad.
D. Publication IPC-7351 is recommended for alternate designs.
E. Laser cutting apertures with trapezoidal walls and also rounding corners will offer better paste release. Customers should contact their board assembly site for stencil design recommendations. Example stencil design based on a 50% volumetric metal load solder paste. Refer to IPC-7525 for other stencil recommendations.

D (R–PDSO–G8) PLASTIC SMALL OUTLINE

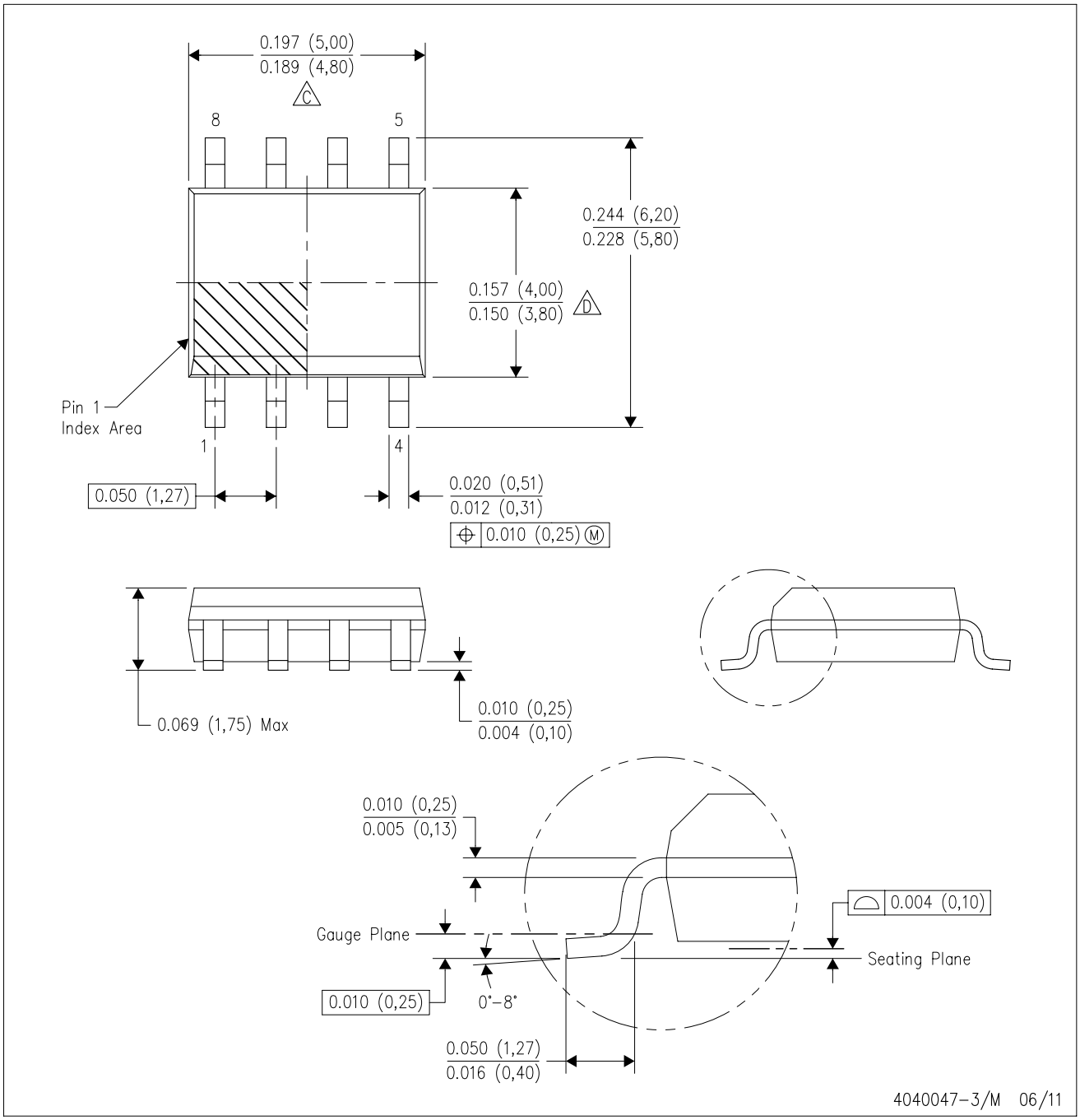

NOTES:
A. All linear dimensions are in inches (millimeters).
B. This drawing is subject to change without notice.
C. Body length does not include mold flash, protrusions, or gate burrs. Mold flash, protrusions, or gate burrs shall not exceed 0.006 (0,15) each side.
D. Body width does not include interlead flash. Interlead flash shall not exceed 0.017 (0,43) each side.
E. Reference JEDEC MS–012 variation AA.

IMPORTANT NOTICE

Texas Instruments Incorporated and its subsidiaries (TI) reserve the right to make corrections, enhancements, improvements and other changes to its semiconductor products and services per JESD46, latest issue, and to discontinue any product or service per JESD48, latest issue. Buyers should obtain the latest relevant information before placing orders and should verify that such information is current and complete. All semiconductor products (also referred to herein as “components”) are sold subject to TI’s terms and conditions of sale supplied at the time of order acknowledgment.

TI warrants performance of its components to the specifications applicable at the time of sale, in accordance with the warranty in TI’s terms and conditions of sale of semiconductor products. Testing and other quality control techniques are used to the extent TI deems necessary to support this warranty. Except where mandated by applicable law, testing of all parameters of each component is not necessarily performed.

TI assumes no liability for applications assistance or the design of Buyers’ products. Buyers are responsible for their products and applications using TI components. To minimize the risks associated with Buyers’ products and applications, Buyers should provide adequate design and operating safeguards.

TI does not warrant or represent that any license, either express or implied, is granted under any patent right, copyright, mask work right, or other intellectual property right relating to any combination, machine, or process in which TI components or services are used. Information published by TI regarding third-party products or services does not constitute a license to use such products or services or a warranty or endorsement thereof. Use of such information may require a license from a third party under the patents or other intellectual property of the third party, or a license from TI under the patents or other intellectual property of TI.

Reproduction of significant portions of TI information in TI data books or data sheets is permissible only if reproduction is without alteration and is accompanied by all associated warranties, conditions, limitations, and notices. TI is not responsible or liable for such altered documentation. Information of third parties may be subject to additional restrictions.

Resale of TI components or services with statements different from or beyond the parameters stated by TI for that component or service voids all express and any implied warranties for the associated TI component or service and is an unfair and deceptive business practice. TI is not responsible or liable for any such statements.

Buyer acknowledges and agrees that it is solely responsible for compliance with all legal, regulatory and safety-related requirements concerning its products, and any use of TI components in its applications, notwithstanding any applications-related information or support that may be provided by TI. Buyer represents and agrees that it has all the necessary expertise to create and implement safeguards which anticipate dangerous consequences of failures, monitor failures and their consequences, lessen the likelihood of failures that might cause harm and take appropriate remedial actions. Buyer will fully indemnify TI and its representatives against any damages arising out of the use of any TI components in safety-critical applications.

In some cases, TI components may be promoted specifically to facilitate safety-related applications. With such components, TI’s goal is to help enable customers to design and create their own end-product solutions that meet applicable functional safety standards and requirements. Nonetheless, such components are subject to these terms.

No TI components are authorized for use in FDA Class III (or similar life-critical medical equipment) unless authorized officers of the parties have executed a special agreement specifically governing such use.

Only those TI components which TI has specifically designated as military grade or “enhanced plastic” are designed and intended for use in military/aerospace applications or environments. Buyer acknowledges and agrees that any military or aerospace use of TI components which have ***not*** been so designated is solely at the Buyer's risk, and that Buyer is solely responsible for compliance with all legal and regulatory requirements in connection with such use.

TI has specifically designated certain components as meeting ISO/TS16949 requirements, mainly for automotive use. In any case of use of non-designated products, TI will not be responsible for any failure to meet ISO/TS16949.

Products		**Applications**	
Audio	www.ti.com/audio	Automotive and Transportation	www.ti.com/automotive
Amplifiers	amplifier.ti.com	Communications and Telecom	www.ti.com/communications
Data Converters	dataconverter.ti.com	Computers and Peripherals	www.ti.com/computers
DLP® Products	www.dlp.com	Consumer Electronics	www.ti.com/consumer-apps
DSP	dsp.ti.com	Energy and Lighting	www.ti.com/energy
Clocks and Timers	www.ti.com/clocks	Industrial	www.ti.com/industrial
Interface	interface.ti.com	Medical	www.ti.com/medical
Logic	logic.ti.com	Security	www.ti.com/security
Power Mgmt	power.ti.com	Space, Avionics and Defense	www.ti.com/space-avionics-defense
Microcontrollers	microcontroller.ti.com	Video and Imaging	www.ti.com/video
RFID	www.ti-rfid.com		
OMAP Applications Processors	www.ti.com/omap	**TI E2E Community**	e2e.ti.com
Wireless Connectivity	www.ti.com/wirelessconnectivity		

Mailing Address: Texas Instruments, Post Office Box 655303, Dallas, Texas 75265
Copyright © 2013, Texas Instruments Incorporated

Mouser Electronics

Authorized Distributor

Click to View Pricing, Inventory, Delivery & Lifecycle Information:

Texas Instruments:

LMC7221AIM LMC7221AIM/NOPB LMC7221AIM5 LMC7221AIM5/NOPB LMC7221AIM5X LMC7221AIM5X/NOPB LMC7221AIMX LMC7221AIMX/NOPB LMC7221BIM LMC7221BIM/NOPB LMC7221BIM5 LMC7221BIM5/NOPB LMC7221BIM5X LMC7221BIM5X/NOPB LMC7221BIMX LMC7221BIMX/NOPB