THIS DRAWING IS UNPUBLISHED. RELEASED FOR PUBLICATION -,- .
© COPYRIGHT - By - ALL RIGHTS RESERVED.

LOC	DIST
AF	50

REVISIONS

P	LTR	DESCRIPTION	DATE	DWN	APVD
	AG	REVISED PER ECR-13-011489	09DEC2013	KH	PD

1 SUPPLIED IN LOOSE PIECE.

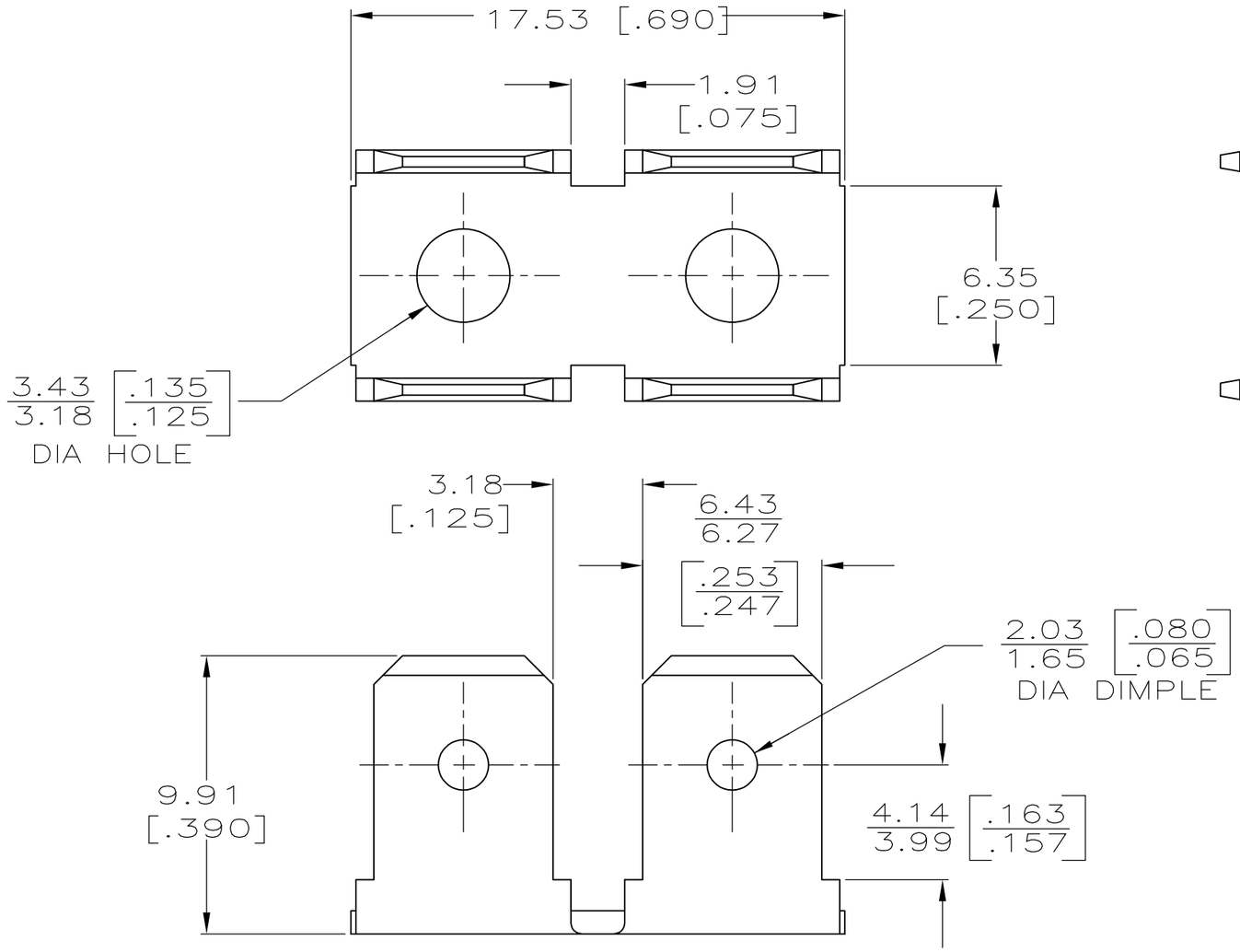

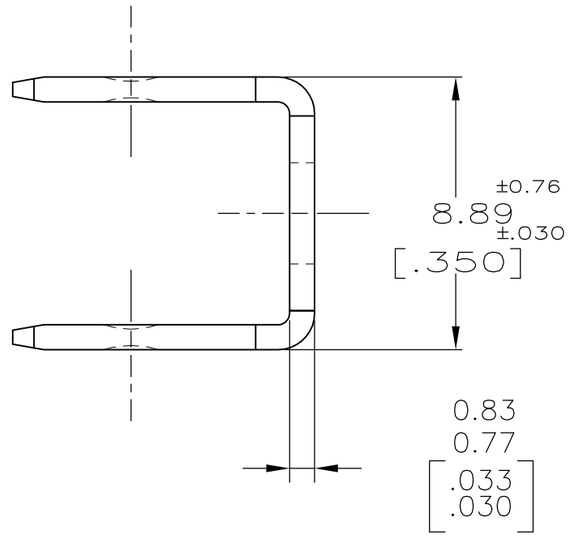

41481
PART NO

THIS DRAWING IS A CONTROLLED DOCUMENT.

DIMENSIONS: mm [INCHES]

TOLERANCES UNLESS OTHERWISE SPECIFIED:

0 PLC	± –
1 PLC	± –
2 PLC	± –
3 PLC	± 0.38 [.015]
4 PLC	± –
ANGLES	± –

MATERIAL: BRASS
FINISH: TIN

DWN	JR RUTH	12/2/91
CHK	MS FEHER	12/2/91
APVD	MEYERS	12/2/91
PRODUCT SPEC	—	
APPLICATION SPEC	—	
WEIGHT	—	

CUSTOMER DRAWING

TE Connectivity

NAME: TAB, FASTON, 6.35 [.250] SERIES

SIZE	CAGE CODE	DRAWING NO	RESTRICTED TO
A3	00779	C-41481	—

SCALE	SHEET	REV
5:1	1 OF 1	AG