THIS DRAWING IS UNPUBLISHED. RELEASED FOR PUBLICATION 20
© COPYRIGHT 20 BY TYCO ELECTRONICS CORPORATION, ALL RIGHTS RESERVED.

LOC	DIST
FT	0

REVISIONS

P	LTR	DESCRIPTION	DATE	DWN	APVD
	C	REVISED PER 0G3B-0119-01	31JUL2001	EZ	DB
	D	REVISED ECO-07-008459	24APR2007	SW	CR

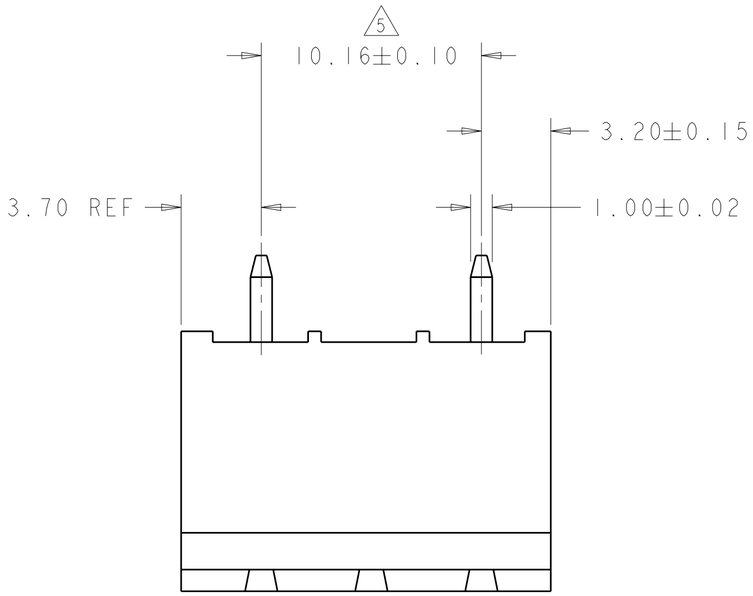

1. MATERIALS
   HOUSING: PA 6-6, UL 94-V0, COLOR: SEE TABLE
   CONTACT: PHOSPHOR BRONZE, FINISH: SEE TABLE
2. SUITABLE FOR 1,6-2,4mm PC BOARD THICKNESS.
3. RECOGNIZED UNDER THE COMPONENT PROGRAM OF UNDERWRITERS LABORATORIES INC. FILE N° E60677
4. IMQ CERTIFICATE WITH SURVEILLANCE IN CONFORMITY WITH IEC 998-1/998-2-1.
5. NOT CUMULATIVE TOLERANCE.

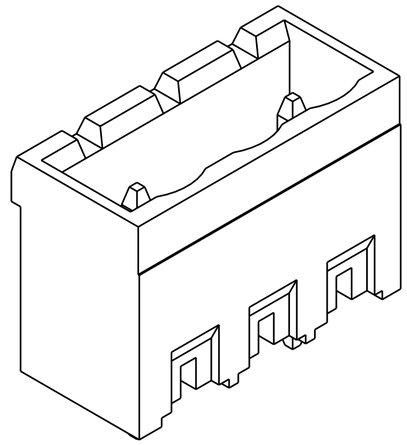

282828-2 AS SHOWN

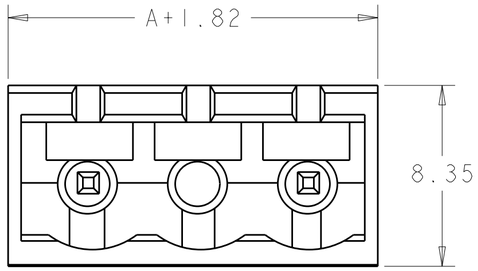

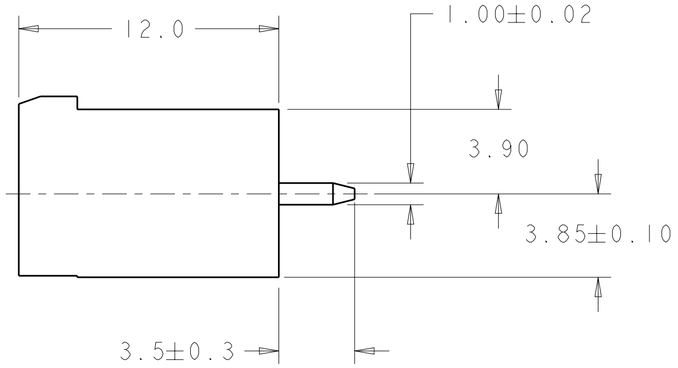

HOUSING COLOR	CONTACT FINISH	A	NO OF POSN	PART NUMBER
BLACK	TIN PLATED	35.56	4	2-282828-4
GREEN	0.00076 GOLD PLATED	15.24	2	1-282828-4
GREEN	TIN PLATED	127.00	13	1-282828-3
GREEN		116.84	12	1-282828-2
GREEN		106.68	11	1-282828-1
GREEN		96.52	10	1-282828-0
GREEN		86.36	9	282828-9
GREEN		76.20	8	282828-8
GREEN		66.04	7	282828-7
GREEN		55.88	6	282828-6
GREEN		45.72	5	282828-5
GREEN		35.56	4	282828-4
GREEN		25.40	3	282828-3
GREEN		15.24	2	282828-2

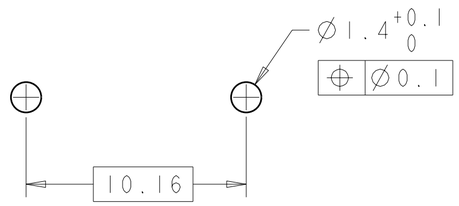

RECOMMENDED PC BOARD LAYOUT

THIS DRAWING IS A CONTROLLED DOCUMENT FOR TYCO ELECTRONICS CORPORATION. IT IS SUBJECT TO CHANGE AND THE CONTROLLING ENGINEERING ORGANIZATION SHOULD BE CONTACTED FOR THE LATEST REVISION.

DIMENSIONS: mm

TOLERANCES UNLESS OTHERWISE SPECIFIED:
0 PLC ±-
1 PLC ±.3
2 PLC ±.25
3 PLC ±-
4 PLC ±-
ANGLES ±2

MATERIAL 1 -
FINISH 1 -

DWN 31JUL2001 E. ZANOLINI
CHK 31JUL2001 D. BIEVENOUR
APVD 31JUL2001 D. BIEVENOUR
PRODUCT SPEC 108-20166
APPLICATION SPEC 114-20079
WEIGHT -

Tyco Electronics
Tyco Electronics
Harrisburg, PA 17105-3608

NAME
TERMINAL BLOCK HEADER ASSEMBLY
180° CLOSED ENDS
10.16mm PITCH

SIZE	CAGE CODE	DRAWING NO	RESTRICTED TO
A2	00779	C-282828	-

CUSTOMER DRAWING | SCALE 5:1 | SHEET 1 OF 1 | REV D

AMP 1471-9 REV 31MAR2000

Pro/ENGINEER DRAWING