DASH NO. RANGE	"D" DIA. RANGE	"E" DIMENSION		"G" GAP	"R" RADIUS	"T" GAUGE		"S" +.016 - .000
		ALUM.	STEEL			ALUM.	STEEL	
-2	1/8"	"D"/2 + .395	"D"/2 + .395	.078 / .062	.062	.032	.032	.045
-3 THRU -8	3/16" TO 1/2"	"D"/2 + .404	"D"/2 + .404					
-9 THRU -12	9/16" TO 3/4"	"D"/2 + .470	"D"/2 + .468		.109	.050		
-13 THRU -17	13/16" TO 1-1/16"		"D"/2 + .452					
-18 THRU -30	1-1/8" TO 1-7/8"	"D"/2 + .500	"D"/2 + .468	.109	.125	.062		.060
-31 THRU -66	1-15/16" TO 4-1/8"		"D"/2 + .476	.140			.040	

REV.	CHANGE	DATE	BY	CHK'D	APPR
G	SEE DRAWING CHANGE RECORD ON FILE.	09/25/13	HAD	KWE	HAD

S482

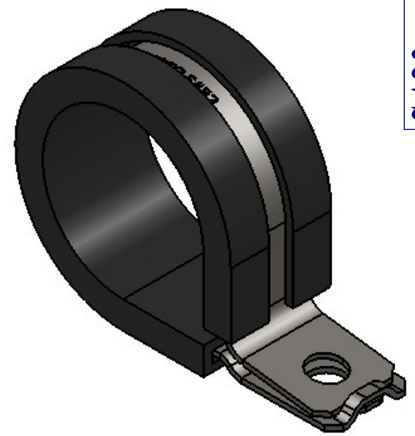

MATERIAL & FINISH CODES:

METAL: "NO CODE" 1008/1020 LOW CARBON STEEL PER ASTM A 1008, ASTM A 109, QQ-S-698
FINISH: CAD PLATE BRIGHT PER AMS-QQ-P-416, TY. I, CL. 2
"D" 2024-T42 ALUMINUM CLAD PER AMS-QQ-A-250/5
FINISH: CHEMICAL FILM GOLD PER MIL-DTL-5541, TY. I, CL. 1A
"SS" 304/321 STAINLESS STEEL PER AMS 5513/AMS 5510
FINISH: BALL BURNISH & PASSIVATE
PER ASTM A 967 & AMS 2700, METHOD 1, TY. 6

CUSHION: "F" NITRILE BUTADIENE PER AMS 3215
COLOR: YELLOW
"G" NEOPRENE PER AMS 3209 & MIL-C-8603
COLOR: BLACK W/BLUE IDENTIFIER
"H" SILICONE PER AMS 3303 & MIL-C-8603 WITH 100 PSI MIN. TEAR
COLOR: NATURAL WHITE

EXAMPLE OF PART CALLOUT:

1" DIA. STAINLESS STEEL CLAMP W/WEDGED NEOPRENE CUSHION

S482 W SS G 16
- 16 — DIA. "D" IN 1/16th INCREMENTS
- G — CUSHION CODE
- SS — METAL CODE (OMIT FOR "NO CODE")
- W — WEDGE CODE (OMIT IF NOT APPLICABLE)
- S482 — BASIC DRAWING NUMBER

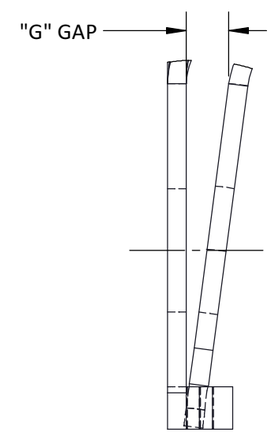

DETAIL F
TANG LOCK DETAIL
PER DS1016

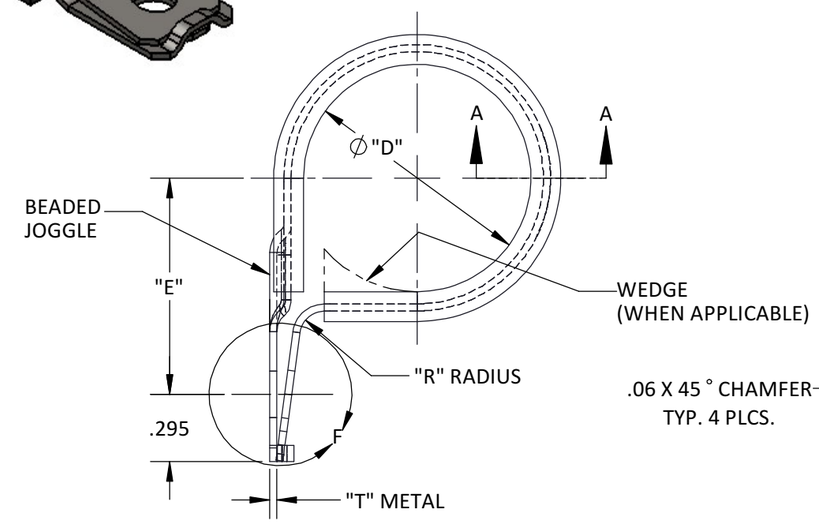

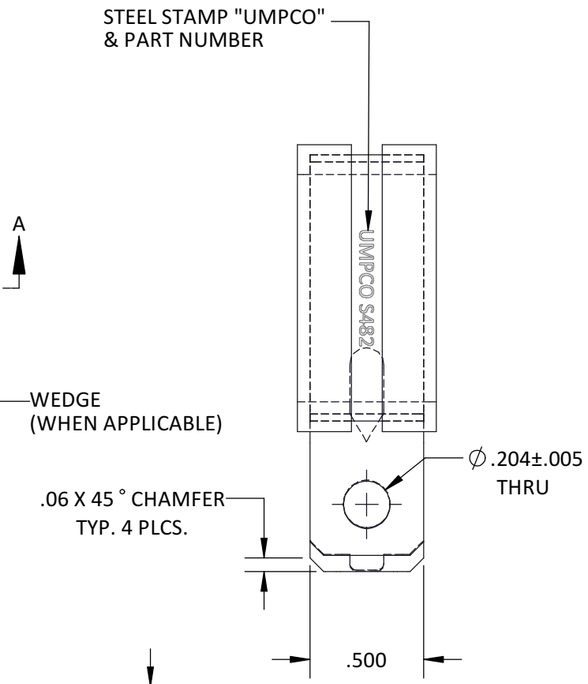

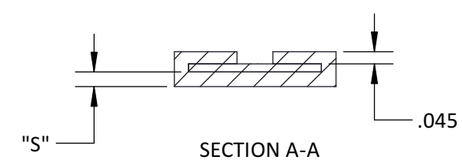

SECTION A-A

SHEET 1 OF 1

NOTES:

1) WEDGE IS AVAILABLE FOR SIZES -2 THRU -48 ONLY.
2) WEDGE SHALL BE INTEGRALLY MOLDED OR VULCANIZED.
3) ALL DIMENSIONS ARE IN INCHES.
4) CLAMPS FURNISHED IN THE NORMAL OPEN (SPRINGBACK) CONDITION.
5) INSPECT PER MIL-C-8603 CLOSURE TEST.

REFERENCES:

LIMITS ON DIMENSIONS UNLESS OTHERWISE SPECIFIED:
ANGULAR: X ± 5°
DECIMAL: .XX ± .03; .XXX ± .015

GENERAL MACHINE FINISHES EXCEPT AS NOTED:
INTERPRET GEOMETRIC TOLERANCING PER: ASME-Y14.5M

REMOVE ALL BURRS AND BREAK SHARP EDGES .010 MAX

ACT. WGHT. -
CALC. WGHT. -

PROPRIETARY AND CONFIDENTIAL
THE INFORMATION CONTAINED IN THIS DRAWING IS THE SOLE PROPERTY OF UMPCO, INC. ANY REPRODUCTION IN PART OR AS A WHOLE WITHOUT THE WRITTEN PERMISSION OF UMPCO, INC IS PROHIBITED.

UMPCO, INC.
7100 LAMPSON AVE.
P.O. BOX 5158
GARDEN GROVE, CA. 92846

CLAMP, LOOP-CUSHIONED, TANG LOCK, FOR #10 MOUNTING SCREW

PART AND/OR ASSEMBLY DESCRIPTION

FSCM/CAGE CODE No. 18076

KEL	KEL	EHK
02/07/78	02/07/78	02/07/78
DRAWN	CHECKED	ENGR

SIZE B — SCALE: NONE

PRINT NUMBER: S482