Z8018x

Family MPU

User Manual

UM005001-ZMP0400

ZiLOG WORLDWIDE HEADQUARTERS • 910 E. HAMILTON AVENUE • CAMPBELL, CA 95008
TELEPHONE: 408.558.8500 • FAX: 408.558.8300 • WWW.ZILOG.COM

Z8018x
Family MPU User Manual

This publication is subject to replacement by a later edition. To determine whether a later edition exists, or to request copies of publications, contact

ZiLOG Worldwide Headquarters
910 E. Hamilton Avenue
Campbell, CA 95008
Telephone: 408.558.8500
Fax: 408.558.8300
www.ZiLOG.com

Windows is a registered trademark of Microsoft Corporation.

Document Disclaimer

© 2000 by ZiLOG, Inc. All rights reserved. Information in this publication concerning the devices, applications, or technology described is intended to suggest possible uses and may be superseded. ZiLOG, INC. DOES NOT ASSUME LIABILITY FOR OR PROVIDE A REPRESENTATION OF ACCURACY OF THE INFORMATION, DEVICES, OR TECHNOLOGY DESCRIBED IN THIS DOCUMENT. ZiLOG ALSO DOES NOT ASSUME LIABILITY FOR INTELLECTUAL PROPERTY INFRINGEMENT RELATED IN ANY MANNER TO USE OF INFORMATION, DEVICES, OR TECHNOLOGY DESCRIBED HEREIN OR OTHERWISE. Except with the express written approval ZiLOG, use of information, devices, or technology as critical components of life support systems is not authorized. No licenses or other rights are conveyed, implicitly or otherwise, by this document under any intellectual property rights.

UM005001-ZMP0400

MANUAL OBJECTIVES

This user manual describes the features of the Z8018x Family MPUs.This manual provides basic programming information for the Z80180/Z8S180/Z8L180. These cores and base peripheral sets are used in a large family of ZiLOG products. Below is a list of ZiLOG products that use this class of processor, along with the associated processor family.This document is also the core user manual for the following products:

Part	Family
Z80180	Z80180
Z8S180	Z8S180
Z8L180	Z8L180
Z80181	Z80180
Z80182	Z80180, Z8S180*
Z80S183	Z8S180
Z80185/195	Z8S180
Z80189	Z8S180

* Part number-dependant

Intended Audience

This manual is written for those who program the Z8018x Family.

Manual Organization

The Z8018x Family User Manual is divided into five sections, seven appendices, and an index.

Sections

Z8018X MPU Operation

Presents features, a general description, pins descriptions, block diagrams, registers, and details of operating modes for the Z8018x MPUs.

Software Architecture

Provides instruction sets and CPU registers for the Z8018x MPUs.

DC Characteristics

Presents the DC parameters and absolute maximum ratings for the Z8X180 MPUs.

AC Characteristics

Presents the AC parameters for the Z8018x MPUs.

Timing Diagrams

Contains timing diagrams and standard test conditions for the Z8018x MPUs.

Appendices

The appendixes in this manual provide additional information applicable to the Z8018x family of ZiLOG MPUs:

- Instruction set
- Instruction summary table
- Op Code map
- Bus Control signal conditions in each machine cycle and interrupt conditions
- Operating mode summary
- Status signals
- I/O registers and ordering information

Table of Contents

Z80180, Z8S180, Z8L180 MPU Operation 1

Features 1

General Description 1

Pin Description 7

Architecture 12

Operation Modes 15
- CPU Timing 18
- Wait State Generator 27
- HALT and Low Power Operation Modes (Z80180-Class Processors Only) 31
- Low Power Modes (Z8S180/Z8L180 only) 36
- Add-On Features 36
- STANDBY Mode 37
- STANDBY Mode Exit wiht BUS REQUEST 38
- STANDBY Mode EXit with External Interrupts 39
- IDLE Mode 40
- STANDBY-QUICK RECOVERY Mode 41
- Internal I/O Registers 41
- MMU Register Description 60
- Interrupts 65
- Interrupt Acknowledge Cycle Timings 82
- Interrupt Sources During RESET 83
- Dynamic RAM Refresh Control 86
- DMA Controller (DMAC) 90
- Asynchronous Serial Communication Interface (ASCI) 115

Baud Rate Generator
(Z8S180/Z8L180-Class Processors Only) 143
Clocked Serial I/O Port (CSI/O) 146
CSI/O Registers Description 147
Programmable Reload Timer (PRT) 156
Miscellaneous 172

Software Architecture 173

Instruction Set 173

CPU Registers 175

DC Characteristics 185

Absolute Maximum Rating 185

Z80180 DC Characteristics 186

Z8S180 DC Characteristics 187

Z8L180 DC Characteristics 189

AC Characteristics 193

AC Characteristics—Z8S180 193

Timing Diagrams 197

Standard Test Conditions 205

Instruction Set 207

Register 207

Bit 207

Condition 208

Restart Address 209

Flag 209
Miscellaneous 210
Data Manipulation Instructions 211
Data Transfer Instructions 222
Program and Control Instructions 229
Special Control Instructions 235

Instruction Summary 237

Op Code Map 247

Bus Control Signal Conditions 251

Bus and Control Signal Condition in each Machine Cycle 251
Interrupts 279

Operating Modes Summary 281

Request Acceptances in Each Operating Mode 281
Request Priority 282
Operation Mode Transition 283
Other Operation Mode Transitions 285

Status Signals 287

Pin Outputs in Each Operating Mode 287
Pin Status 288

I/O Registers 293

Internal I/O Registers 293
Ordering Information 303

List of Figures

Z80180, Z8S180, Z8L180 MPU Operation 1

Figure 1. 64-Pin DIP 3
Figure 2. 68-Pin PLCC 4
Figure 3. 80-Pin QFP 5
Figure 4. Z80180/Z8S180/Z8L180 Block Diagram 6
Figure 5. Operation Mode Control Register 15
Figure 6. M1 Temporary Enable Timing 16
Figure 7. I/O Read and Write Cycles with IOC = 1 Timing Diagram 17
Figure 8. I/O Read and Write cycles with IOC = 0 Timing Diagram 17
Figure 9. Op Code Fetch (without Wait State) Timing Diagram 19
Figure 10. Op Code Fetch (with Wait State) Timing Diagram 20
Figure 11. Memory Read/Write (without Wait State) Timing Diagram 21
Figure 12. Memory Read/Write (with Wait State) Timing Diagram 22
Figure 13. I/O Read/Write Timing Diagram 23
Figure 14. Instruction Timing Diagram 24
Figure 15. RESET Timing Diagram 25
Figure 16. Bus Exchange Timing During Memory Read 26
Figure 17. Bus Exchange Timing During CPU Internal Operation . . .27
Figure 18. WAIT Timing Diagram 28
Figure 19. Memory and I/O Wait State Insertion (DCNTL – DMA/Wait Control Register) 29
Figure 20. HALT Timing Diagram 33

Figure 21. SLEEP Timing Diagram 35
Figure 22. I/O Address Relocation 43
Figure 23. Logical Address Mapping Examples 55
Figure 24. Physical Address Transition 56
Figure 25. MMU Block Diagram 56
Figure 26. I/O Address Translation 57
Figure 27. Logical Memory Organization 58
Figure 28. Logical Space Configuration 59
Figure 29. Physical Address Generation 64
Figure 30. Physical Address Generation 2 64
Figure 31. Interrupt Sources 65
Figure 32. TRAP Timing Diagram -2nd Op Code Undefined 71
Figure 33. TRAP Timing - 3rd Op Code Undefined 72
Figure 34. NMI Use 74
Figure 35. NMI Timing 75
Figure 36. INT0 Mode 0 Timing Diagram 76
Figure 37. INT0 Mode 1 Interrupt Sequence 77
Figure 38. INT0 Mode 1 Timing 78
Figure 39. INT0 Mode 2 Vector Acquisition 79
Figure 40. INT0 Interrupt Mode 2 Timing Diagram 80
Figure 41. INT1, INT2 Vector Acquisition 81
Figure 42. RETI Instruction Sequence 84
Figure 43. INT1, INT2 and Internal Interrupts Timing Diagram 86
Figure 44. Refresh Cycle Timing Diagram 87
Figure 45. DMAC Block Diagram 93
Figure 46. DMA Timing Diagram-CYCLE STEAL Mode 106
Figure 47. CPU Operation and DMA Operation DREQ0 is Programmed for Level-Sense 107
Figure 48. CPU Operation and DMA Operation DREQ0 is Programmed for Edge-Sense 108

Figure 49. TEND0 Output Timing Diagram 108
Figure 50. DMA Interrupt Request Generation 114
Figure 51. NMI and DMA Operation Timing Diagram 115
Figure 52. ASCI Block Diagram 117
Figure 53. DCD0 Timing Diagram 139
Figure 54. RTS0 Timing Diagram 140
Figure 55. ASCI Interrupt Request Circuit Diagram 140
Figure 56. ASCI Clock 141
Figure 57. CSI/O Block Diagram 147
Figure 58. CSI/O Interrupt Request Generation 151
Figure 59. Transmit Timing Diagram–Internal Clock 153
Figure 60. Transmit Timing–External Clock 154
Figure 61. CSI/O Receive Timing–Internal Clock 155
Figure 62. CSI/O Receive Timing–External Clock 156
Figure 63. PRT Block Diagram 157
Figure 64. Timer Initialization, Count Down, and Reload Timing Diagram 163
Figure 65. Timer Output Timing Diagram 164
Figure 66. PRT Interrupt Request Generation 164
Figure 67. E Clock Timing Diagram (During Read/Write Cycle and Interrupt Acknowledge Cycle 167
Figure 68. E Clock Timing in BUS RELEASE Mode 167
Figure 69. E Clock Timing in SLEEP Mode and SYSTEM STOP Mode 168
Figure 70. External Clock Interface 169
Figure 71. Clock Generator Circuit 170
Figure 72. Circuit Board Design Rules 170
Figure 73. Example of Board Design 171

Software Architecture *173*

Figure 74. CPU Register Configurations 176
Figure 75. Register Direct — Bit Field Definitions 181
Figure 76. Register Indirect Addressing 181
Figure 77. Indexed Addressing 182
Figure 78. Extended Addressing 182
Figure 79. Immediate Addressing 183
Figure 80. Relative Addressing 183

Timing Diagrams *197*

Figure 81. AC Timing Diagram 1 197
Figure 82. AC Timing Diagram 2 198
Figure 83. CPU Timing (IOC = 0) (I/O Read Cycle, I/O Write Cycle) 199
Figure 84. DMA Control Signals 200
Figure 85. E Clock Timing (Memory R/W Cycle) (I/O R/W Cycle) 201
Figure 86. E Clock Timing (BUS RELEASE Mode, SLEEP Mode, and SYSTEM STOP Mode 201
Figure 87. EClockTiming(MinimumTimingExampleofPWELandPWEH) 202
Figure 88. Timer Output Timing 202
Figure 89. SLP Execution Cycle Timing Diagram 203
Figure 90. CSI/O Receive/Transmit Timing Diagram 204
Figure 91. External Clock Rise Time and Fall Time 204
Figure 92. Input Rise Time and Fall Time (Except EXTAL, RESET) 204
Figure 93. Test Setup 205

List of Tables

Z80180, Z8S180, Z8L180 MPU Operation 1

Table 1. Status Summary 10
Table 2. Multiplexed Pin Descriptions 12
Table 3. Memory Wait States 29
Table 4. Wait State Insertion 30
Table 5. Power-Down Modes (Z8S180/Z8L180-Class Processor Only) 37
Table 6. I/O Address Map for Z80180-Class Processors Only 44
Table 7. I/O Address Map (Z8S180/Z8L180-Class Processors Only) 48
Table 8. State of IEF1 and IEF2. 69
Table 9. Vector Table 82
Table 10. RETI Control Signal States 85
Table 11. DRAM Refresh Intervals 89
Table 12. Channel 0 Destination 98
Table 13. Channel 0 Source 99
Table 14. Transfer Mode Combinations 99
Table 15. Channel 1 Transfer Mode 102
Table 16. DMA Transfer Request 110
Table 17. Data Formats 131
Table 18. Divide Ratio 134
Table 19. ASCI Baud Rate Selection. 142
Table 20. Clock Mode Bit Values 144
Table 21. 2^ss Values 145
Table 22. CSI/O Baud Rate Selection 150

Table 23. Timer Output Control 163
Table 24. E Clock Timing in Each Condition 166
Table 25. Z8X180 Operating Frequencies 169

Software Architecture 173

Table 26. Instruction Set Summary 173

DC Characteristics 185

Table 27. Absolute Maximum Rating 185
Table 28. Z80180 DC Characteristics 186
Table 29. Z8S180 DC Characteristics 187
Table 30. Z8L180 DC Characteristics 189

AC Characteristics 193

Table 31. Z8S180 AC Characteristics 193

Instruction Set 207

Table 32. Register Values 207
Table 33. Bit Values 208
Table 34. Instruction Values 208
Table 35. Address Values 209
Table 36. Flag Conditions 209
Table 37. Operations Mnemonics 210
Table 38. Arithmetic and Logical Instructions (8-bit) 211
Table 39. Rotate and Shift Instructions 216
Table 40. Arithmetic Instructions (16-bit) 221
Table 41. 8-Bit Load 222
Table 42. 16-Bit Load 223

Table 43. Block Transfer 225
Table 44. Stock and Exchange 227
Table 45. Program Control Instructions 229
Table 46. I/O Instructions 231
Table 47. Special Control Instructions 235

Op Code Map 247

Table 48. 1st Op Code Map Instruction Format: XX 247
Table 49. 2nd Op Code Map Instruction Format: CB XX 249
Table 50. 2nd Op Code Map Instruction Format: ED XX 250

Bus Control Signal Conditions 251

Table 51. Bus and Control Signal Condition in Each Machine Cycle 251
Table 52. Interrupts 279

Operating Modes Summary 281

Table 53. Request Acceptances in Each Operating Mode 281
Table 54. The Z80180 Types of Requests 282

Status Signals 287

Table 55. Pin Outputs in Each Operating Mode 287
Table 56. Pin Status During RESET and LOW POWER OPERATION Modes 289

I/O Registers 293

Table 57. Internal I/O Registers 293

Z80180, Z8S180, Z8L180 MPU Operation

FEATURES

- Operating Frequency to 33 MHz
- On-Chip MMU Supports Extended Address Space
- Two DMA Channels
- On-Chip Wait State Generators
- Two Universal Asynchronous Receiver/Transmitter (UART) Channels
- Two 16-Bit Timer Channels
- On-Chip Interrupt Controller
- On-Chip Clock Oscillator/Generator
- Clocked Serial I/O Port
- Code Compatible with ZiLOG Z80 CPU
- Extended Instructions

GENERAL DESCRIPTION

Based on a microcoded execution unit and an advanced CMOS manufacturing technology, the Z80180, Z8S180, Z8L180 (Z8X180) is an 8-bit MPU which provides the benefits of reduced system costs and low power operation while offering higher performance and maintaining compatibility with a large base of industry standard software written around the ZiLOG Z8X CPU.

Higher performance is obtained by virtue of higher operating frequencies, reduced instruction execution times, an enhanced instruction set, and an

on-chip memory management unit (MMU) with the capability of addressing up to 1 MB of memory.

Reduced system costs are obtained by incorporating several key system functions on-chip with the CPU. These key functions include I/O devices such as DMA, UART, and timer channels. Also included on-chip are several *glue* functions such as dynamic RAM refresh control, wait state generators, clock oscillator, and interrupt controller.

Not only does the Z8X180 consume a low amount of power during normal operation, but processors with Z8S180 and Z8L180 class processors also provides two operating modes that are designed to drastically reduce the power consumption even further. The SLEEP mode reduces power by placing the CPU into a *stopped* state, thereby consuming less current, while the on-chip I/O device is still operating. The SYSTEM STOP mode places both the CPU and the on-chip peripherals into a *stopped* state, thereby reducing power consumption even further.

When combined with other CMOS VLSI devices and memories, the Z8X180 provides an excellent solution to system applications requiring high performance, and low power operation.

Figures 1 through 3 illustrate the three pin packages in the Z8X180 MPU family:

- 64-Pin Dual In-line Package (DIP), Figure 1
- 68-Pin Plastic Leaded Chip Carrier (PLCC), Figure 2
- 80-Pin Quad Flat Pack (QFP), Figure 3

Pin out package descriptions for other Z8X180-based products are covered in their respective product specifications.

Figure 4 depicts the block diagram that is shared throughout all configurations of the Z8X180.

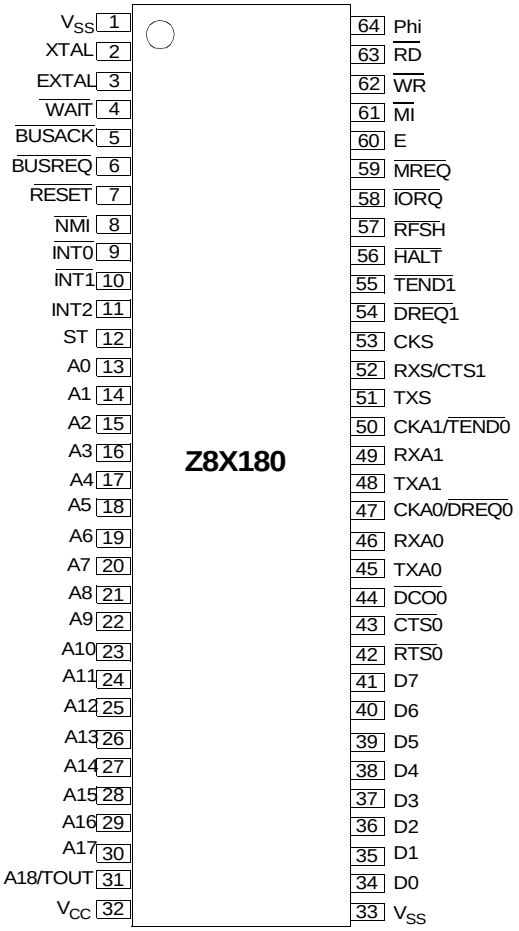

Figure 1. 64-Pin DIP

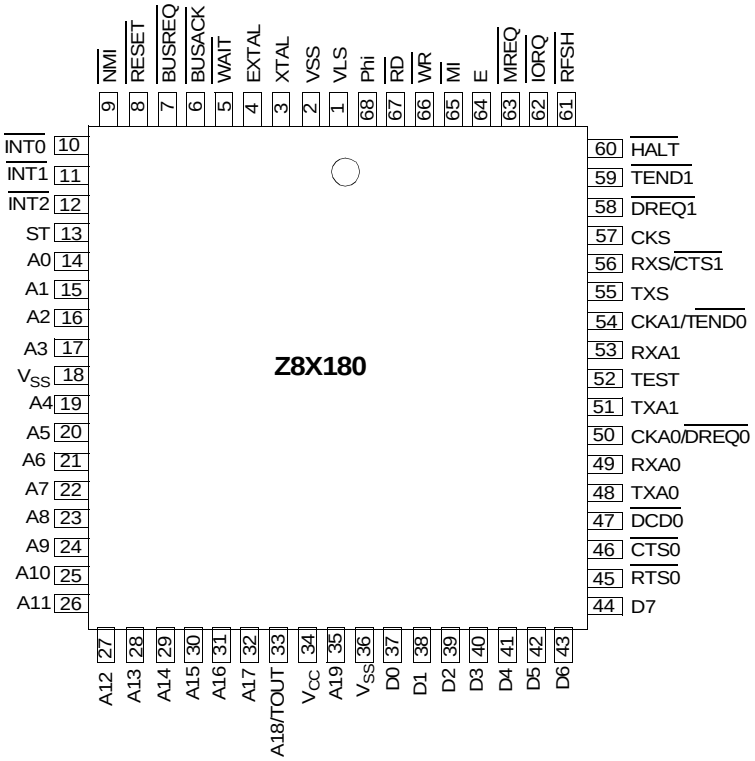

Figure 2. 68-Pin PLCC

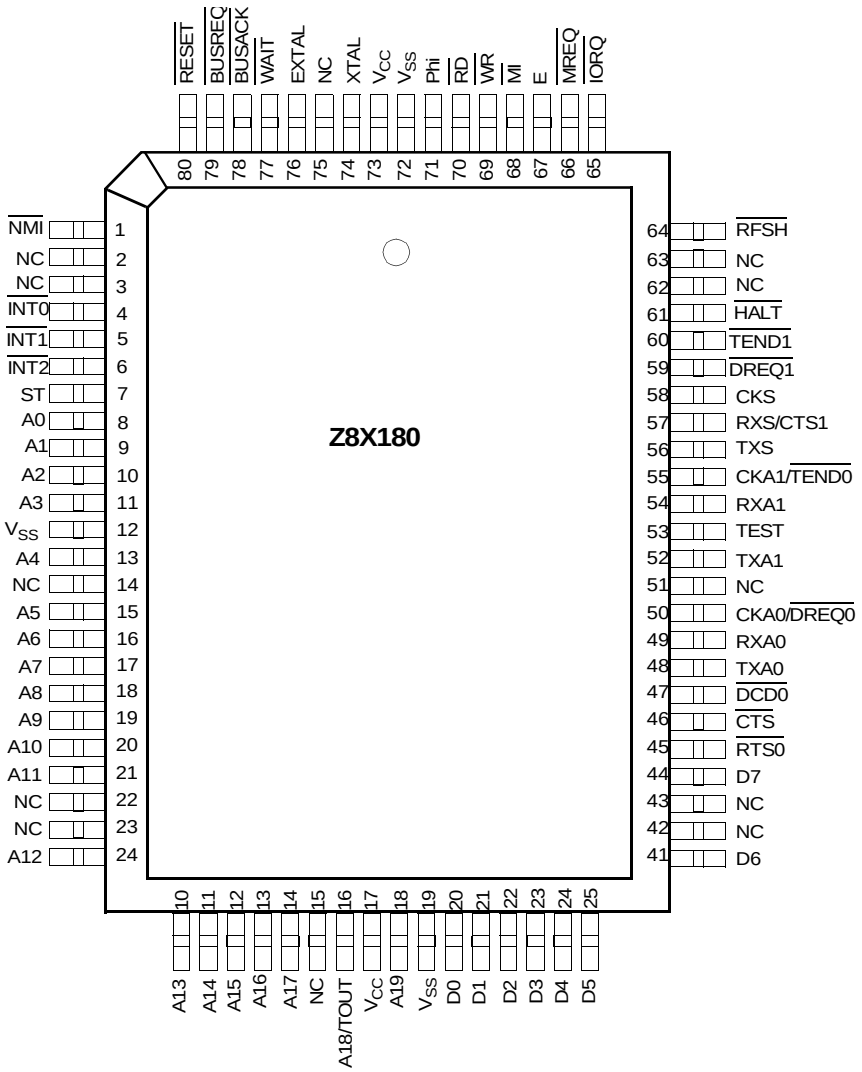

Figure 3. 80-Pin QFP

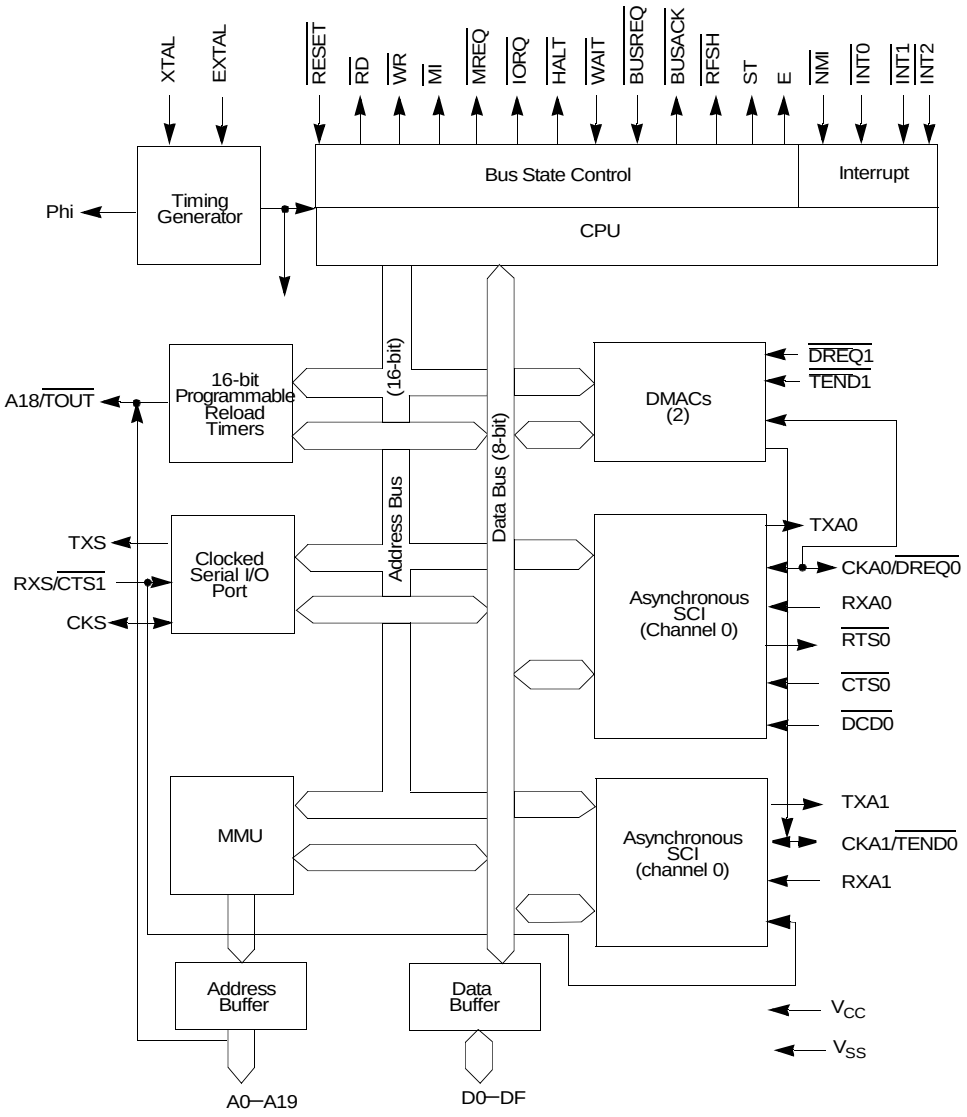

Figure 4. Z80180/Z8S180/Z8L180 Block Diagram

PIN DESCRIPTION

A0–A19. *Address Bus (Output, Active High, 3-state).* A0–A19 form a 20-bit address bus. The Address Bus provides the address for memory data bus exchanges, up to 1 MB, and I/O data bus exchanges, up to 64K. The address bus enters a high impedance state during RESET and external bus acknowledge cycles. Address line A18 is multiplexed with the output of PRT channel 1 (TOUT, selected as address output on RESET) and address line A19 is not available in DIP versions of the Z8X180.

$\overline{\text{BUSACK}}$. *Bus Acknowledge (Output, Active Low).* $\overline{\text{BUSACK}}$ indicates that the requesting device, the MPU address and data bus, and some control signals, have entered their high impedance state.

$\overline{\text{BUSREQ}}$. *Bus Request (Input, Active Low).* This input is used by external devices (such as DMA controllers) to request access to the system bus. This request has a higher priority than $\overline{\text{NMI}}$ and is always recognized at the end of the current machine cycle. This signal stops the CPU from executing further instructions and places the address and data buses, and other control signals, into the high impedance state.

CKA0, CKA1. *Asynchronous Clock 0 and 1 (Bidirectional, Active High).* These pins are the transmit and receive clocks for the ASCI channels. CKA0, is multiplexed with $\overline{\text{DREQ0}}$ and CKA1 is multiplexed with $\overline{\text{TEND0}}$.

CKS. *Serial Clock (Bidirectional, Active High).* This line is the clock for the CSIO channel.

CLOCK (PHI). *System Clock (Output, Active High).* The output is used as a reference clock for the MPU and the external system. The frequency of this output is equal to one-half that of the crystal or input clock frequency.

$\overline{\text{CTS0}}$, $\overline{\text{CTS1}}$. *Clear to Send 0 and 1 (Inputs, Active Low).* These lines are modem control signals for the ASCI channels. $\overline{\text{CTS1}}$ is multiplexed with RXS.

D0–D7. *Data Bus (Bidirectional, Active High, 3-state).* D0-D7 constitute an 8-bit bidirectional data bus, used for the transfer of information to and from I/O and memory devices. The data bus enters the high impedance state during RESET and external bus acknowledge cycles.

$\overline{\text{DCD0}}$. *Data Carrier Detect 0 (Input, Active Low).* This input is a programmable modem control signal for ASCI channel 0.

$\overline{\text{DREQ0}}$, $\overline{\text{DREQ1}}$. *DMA Request 0 and 1 (Input, Active Low).* DREQ is used to request a DMA transfer from one of the on-chip DMA channels. The DMA channels monitor these inputs to determine when an external device is ready for a read or write operation. These inputs can be programmed to be either level- or edge-sensed. $\overline{\text{DREQ0}}$ is multiplexed with CKA0.

E. *Enable Clock (Output, Active High).* Synchronous machine cycle clock output during bus transactions.

EXTAL. *External Clock/Crystal (Input, Active High).* Crystal oscillator connection. An external clock can be input to the Z8X180 on this pin when a crystal is not used. This input is Schmitt-triggered.

$\overline{\text{HALT}}$. *Halt/Sleep Status (Output, Active Low).* This output is asserted after the CPU has executed either the $\overline{\text{HALT}}$ or SLP instruction, and is waiting for either non-maskable or maskable interrupt before operation can resume. $\overline{\text{HALT}}$ is also used with the $\overline{\text{M1}}$ and ST signals to decode status of the CPU machine cycle.

$\overline{\text{INT0}}$. *Maskable Interrupt Request 0 (Input, Active Low).* This signal is generated by external I/O devices. The CPU honors this request at the end of the current instruction cycle as long as the $\overline{\text{NMI}}$ and $\overline{\text{BUSREQ}}$ signals are inactive. The CPU acknowledges this interrupt request with an interrupt acknowledge cycle. During this cycle, both the $\overline{\text{M1}}$ and $\overline{\text{IORQ}}$ signals become Active.

$\overline{\text{INT1}}$, $\overline{\text{INT2}}$. *Maskable Interrupt Requests 1 and 2 (Inputs, Active Low)*. This signal is generated by external I/O devices. The CPU honors these requests at the end of the current instruction cycle as long as the $\overline{\text{NMI}}$,

$\overline{\text{BUSREQ}}$, and $\overline{\text{INT0}}$ signals are inactive. The CPU acknowledges these interrupt requests with an interrupt acknowledge cycle. Unlike the acknowledgment for $\overline{\text{INT0}}$, during this cycle neither the $\overline{\text{M1}}$ or $\overline{\text{IORQ}}$ signals become Active.

$\overline{\text{IORQ}}$. *I/O Request (Output, Active Low, 3-state).* $\overline{\text{IORQ}}$ indicates that the address bus contains a valid I/O address for an I/O read or I/O write operation. $\overline{\text{IORQ}}$ is also generated, along with $\overline{\text{M1}}$, during the acknowledgment of the $\overline{\text{INT0}}$ input signal to indicate that an interrupt response vector can be placed onto the data bus. This signal is analogous to the $\overline{\text{IOE}}$ signal of the Z64180.

$\overline{\text{M1}}$. *Machine Cycle 1 (Output, Active Low).* Together with $\overline{\text{MREQ}}$, $\overline{\text{M1}}$ indicates that the current cycle is the Op Code fetch cycle of an instruction execution. Together with $\overline{\text{IORQ}}$, $\overline{\text{M1}}$ indicates that the current cycle is for an interrupt acknowledge. It is also used with the $\overline{\text{HALT}}$ and ST signal to decode status of the CPU machine cycle. This signal is analogous to the $\overline{\text{LIR}}$ signal of the Z64180.

$\overline{\text{MREQ}}$. *Memory Request (Output, Active Low, 3-state).* $\overline{\text{MREQ}}$ indicates that the address bus holds a valid address for a memory read or memory write operation. This signal is analogous to the $\overline{\text{ME}}$ signal of the Z64180.

$\overline{\text{NMI}}$. *Non-maskable Interrupt (Input, negative edge triggered).* $\overline{\text{NMI}}$ has a higher priority than $\overline{\text{INT}}$ and is always recognized at the end of an instruction, regardless of the state of the interrupt enable flip-flops. This signal forces CPU execution to continue at location `0066H`.

$\overline{\text{RD}}$. *Read (Output active Low, 3-state).* $\overline{\text{RD}}$ indicates that the CPU wants to read data from memory or an I/O device. The addressed I/O or memory device must use this signal to gate data onto the CPU data bus.

$\overline{\text{RFSH}}$. *Refresh (Output, Active Low).* Together with $\overline{\text{MREQ}}$, $\overline{\text{RFSH}}$ indicates that the current CPU machine cycle and the contents of the address bus must be used for refresh of dynamic memories. The low order 8 bits of the address bus (A7–A0) contain the refresh address.

This signal is analogous to the $\overline{\text{REF}}$ signal of the Z64180.

$\overline{\text{RTS0}}$. *Request to Send 0 (Output, Active Low).* This output is a programmable modem control signal for ASCI channel 0.

RXA0, RXA1. *Receive Data 0 and 1 (Inputs, Active High).* These signals are the receive data to the ASCI channels.

RXS. *Clocked Serial Receive Data (Input, Active High).* This line is the receiver data for the CSIO channel. RXS is multiplexed with the $\overline{\text{CTS1}}$ signal for ASCI channel 1.

ST. *Status (Output, Active High).* This signal is used with the $\overline{\text{M1}}$ and $\overline{\text{HALT}}$ output to decode the status of the CPU machine cycle. Table 1 provides status summary.

Table 1. Status Summary

ST	$\overline{\text{HALT}}$	$\overline{\text{M1}}$	Operation
0	1	0	CPU operation (1st Op Code fetch)
1	1	0	CPU operation (2nd Op Code and 3rd Op Code fetch)
1	1	1	CPU operation (MC[2] except for Op Code fetch)
0	X[1]	1	DMA operation
0	0	0	HALT mode
1	0	1	SLEEP mode (including SYSTEM STOP mode)

1. X = Don't care
2. MC = Machine cycle

$\overline{\text{TEND0}}$, $\overline{\text{TEND1}}$. *Transfer End 0 and 1 (Outputs, Active Low).* This output is asserted active during the last write cycle of a DMA operation. It is used to indicate the end of the block transfer. $\overline{\text{TEND0}}$ in multiplexed with CKA1.

TEST. *Test (Output, not on DIP version).* This pin is for test and must be left open.

TOUT. *Timer Out (Output, Active High).* TOUT is the pulse output from PRT channel 1. This line is multiplexed with A18 of the address bus.

TXA0, TXA1. *Transmit Data 0 and 1 (Outputs, Active High).* These signals are the transmitted data from the ASCI channels. Transmitted data changes are with respect to the falling edge of the transmit clock.

TXS. *Clocked Serial Transmit Data (Output, Active High).* This line is the transmitted data from the CSIO channel.

$\overline{\text{WAIT}}$. *Wait (Input; Active Low).* $\overline{\text{WAIT}}$ indicates to the CPU that the addressed memory or I/O devices are not ready for a data transfer. This input is used to induce additional clock cycles into the current machine cycle. The $\overline{\text{WAIT}}$ input is sampled on the falling edge of T2 (and subsequent Wait States). If the input is sampled Low, then additional Wait States are inserted until the $\overline{\text{WAIT}}$ input is sampled High, at which time execution continues.

$\overline{\text{WR}}$. *Write (Output, Active Low, 3-state).* $\overline{\text{WR}}$ indicates that the CPU data bus holds valid data to be stored at the addressed I/O or memory location.

XTAL. *Crystal (Input, Active High). Crystal oscillator connection.* This pin must be left open if an external clock is used instead of a crystal. The oscillator input is not a TTL level (reference DC characteristics).

Multiplexed pins are described in Table 2.

Table 2. Multiplexed Pin Descriptions

Multiplexed Pins	Descriptions
A18/TOUT	During RESET, this pin is initialized as A18 pin. If either TOC1 or TOC0 bit of the Timer Control Register (TCR) is set to 1, TOUT function is selected. If TOC1 and TOC0 bits are cleared to 0, A18 function is selected.
CKA0/$\overline{\text{DREQ0}}$	During RESET, this pin is initialized as CKA_0 pin. If either DM1 or SM1 in DMA Mode Register (DMODE) is set to 1, $\overline{\text{DREQ0}}$ function is always selected.
CKA1/$\overline{\text{TEND0}}$	During RESET, this pin is initialized as CKA1 pin. If CKA1D bit in ASCI control register ch 1 (CNTLA1) is set to 1, $\overline{\text{TEND0}}$ function is selected. If CKA1D bit is set to 0, CKA1 function is selected.
RXS/$\overline{\text{CTS1}}$	During RESET, this pin is initialized as RXS pin. If CTS1E bit in ASCI status register ch 1 (STAT1) is set to 1, $\overline{\text{CTS1}}$ function is selected. If CTS1E bit is 0, RXS function is selected.

ARCHITECTURE

The Z8X180 combines a high performance CPU core with a variety of system and I/O resources useful in a broad range of applications. The CPU core consists of five functional blocks: clock generator, bus state controller (including dynamic memory refresh), interrupt controller, memory management unit (MMU), and the central processing unit (CPU). The integrated I/O resources make up the remaining four functional blocks:

- Direct Memory Access (DMA) Control (2 channels)
- Asynchronous Serial Communications Interface (ASCI, 2 channels),

- Programmable Reload Timers (PRT, 2 channels)
- Clock Serial I/O (CSIO) channel.

Other Z8X180 family members (such as Z80183, Z80S183, Z80185/195) feature, in addition to these blocks, additional peripherals and are covered in their associated Product Specification

Clock Generator

This logic generates the system clock from either an external crystal or clock input. The external clock is divided by two and provided to both internal and external devices.

Bus State Controller

This logic performs all of the status and bus control activity associated with both the CPU and some on-chip peripherals. This includes Wait State timing, RESET cycles, DRAM refresh, and DMA bus exchanges.

Interrupt Controller

This block monitors and prioritizes the variety of internal and external interrupts and traps to provide the correct responses from the CPU. To remain compatible with the Z80 CPU, three different interrupt modes are supported.

Memory Management Unit

The MMU allows the user to map the memory used by the CPU (logically only 64K) into the 1MB addressing range supported by the Z8X180. The organization of the MMU object code features compatibility with the Z80 CPU while offering access to an extended memory space. This capability is accomplished by using an effective *common area - banked area* scheme.

Central Processing Unit

The CPU is microcoded to provide a core that is object code compatible with the Z80 CPU. It also provides a superset of the Z80 instruction set, including 8-bit multiply and divide. This core has been enhanced to allow many of the instructions to execute in fewer clock cycles.

DMA Controller

The DMA controller provides high speed transfers between memory and I/O devices. Transfer operations supported are memory-to-memory, memory to/from I/O and I/O to I/O. Transfer modes supported are REQUEST, BURST, and CYCLE STEAL. DMA transfers can access the full 1MB addressing range with a block length up to 64KB, and can cross over 64K boundaries.

Asynchronous Serial Communications Interface (ASCI)

The ASCI logic provides two individual full-duplex UARTs. Each channel includes a programmable baud rate generator and modem control signals. The ASCI channels can also support a multiprocessor communications format.

Programmable Reload Timer (PRT)

This logic consists of two separate channels, each containing a 16-bit counter (timer) and count reload register. The time base for the counters is derived from the system clock (divided by 20) before reaching the counter. PRT channel 1 provides an optional output to allow for waveform generation.

Clocked Serial I/O (CSIO)

The CSIO channel provides a half-duplex serial transmitter and receiver. This channel can be used for simple high-speed data connection to another microprocessor or microcomputer.

OPERATION MODES

The Z8X180 can be configured to operate like the Hitachi HD64180. This functionality is accomplished by allowing user control over the $\overline{M1}$, $\overline{IORQ}$, $\overline{WR}$, and $\overline{RD}$ signals. The Operation Mode Control Register (OMCR), illustrated in Figure 5, determines the $\overline{M1}$ options, the timing of the $\overline{IORQ}$, $\overline{RD}$, and $\overline{WR}$ signals, and the RETI operation.

Operation Mode Control Register

Bit	7	6	5	4	0
Bit/Field	M1E	$\overline{M1TE}$	IOC	Reserved	
R/W	R/W	W	R/W	–	
Reset	1	1	1	–	
Note: R = Read W = Write X = Indeterminate? = Not Applicable					

Figure 5. Operation Mode Control Register

M1E (M1 Enable): This bit controls the $\overline{M1}$ output and is set to a `1` during RESET.

When M1E is `1`, the $\overline{M1}$ output is asserted Low during the Op Code fetch cycle, the INT0 acknowledge cycle, and the first machine cycle of the NMI acknowledge. This action also causes the M1 signal to be Active during both fetches of the RETI instruction sequence, and may cause corruption of the external interrupt daisy chain. Therefore, this bit must be `0` for the Z8X180. When M1E is `0` the $\overline{M1}$ output is normally inactive and asserted Low only during the refetch of the RETI instruction sequence and the INT0 acknowledge cycle (Figure 6).

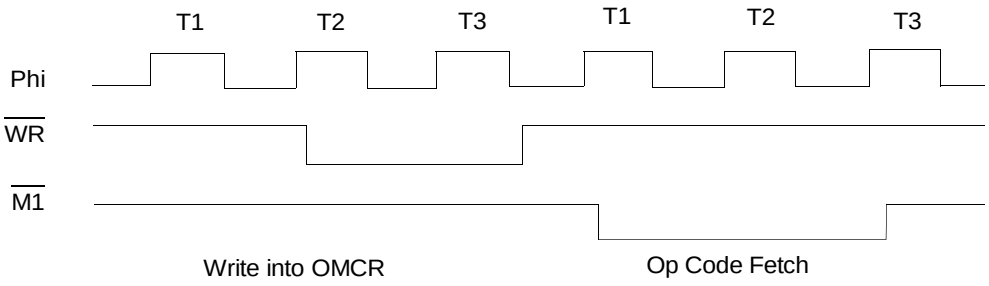

Figure 6. M1 Temporary Enable Timing

$\overline{\text{M1TE}}$ (M1 Temporary Enable): This bit controls the temporary assertion of the $\overline{\text{M1}}$ signal. It is always read back as a 1 and is set to 1 during RESET. This function is used to *arm* the internal interrupt structure of the Z80PIO. When a control word is written to the Z80PIO to enable interrupts, no enable actually takes place until the PIO sees an active $\overline{\text{M1}}$ signal. When $\overline{\text{M1TE}}$ is `1`, there is no change in the operation of the $\overline{\text{M1}}$ signal and M1E controls its function. When $\overline{\text{M1TE}}$ is `0`, the $\overline{\text{M1}}$ output is asserted during the next Op Code fetch cycle regardless of the state programmed into the M1E bit. This situation is only momentary (one time) and the user need not reprogram a `1` to disable the function (See Figure 7).

$\overline{\text{IOC}}$: This bit controls the timing of the $\overline{\text{IORQ}}$ and $\overline{\text{RD}}$ signals. $\overline{\text{IOC}}$ is set to `1` by RESET.

When $\overline{\text{IOC}}$ is `1`, the $\overline{\text{IORQ}}$ and $\overline{\text{RD}}$ signals function the same as the HD64180.

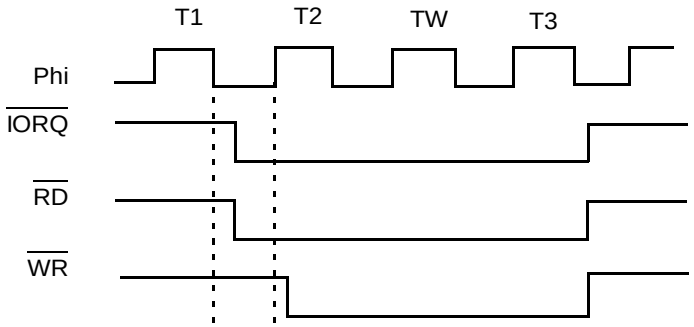

Figure 7. I/O Read and Write Cycles with $\overline{IOC}$ = 1 Timing Diagram

When $\overline{IOC}$ is `0`, the timing of the $\overline{IORQ}$ and $\overline{RD}$ signals match the timing required by the Z80 family of peripherals. The $\overline{IORQ}$ and $\overline{RD}$ signals go active as a result of the rising edge of T2. This timing allows the Z8X180 to satisfy the setup times required by the Z80 peripherals on those two signals (Figure).

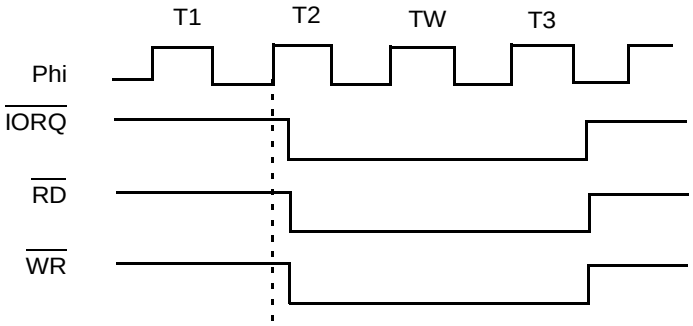

Figure 8. I/O Read and Write cycles with IOC = 0 Timing Diagram

For the remainder of this document, assume that M1E is `0` and $\overline{IOC}$ is `0`.

Note: The user must program the Operation Mode Control Register before the first I/O instruction is executed.

CPU Timing

This section explains the Z8X180 CPU timing for the following operations:

- Instruction (Op Code) fetch timing
- Operand and data read/write timing
- I/O read/write timing
- Basic instruction (fetch and execute) timing
- RESET timing
- $\overline{\text{BUSREQ}}$/$\overline{\text{BUSACK}}$ bus exchange timing

The basic CPU operation consists of one or more Machine Cycles (MC). A machine cycle consists of three system clocks, T1, T2, and T3 while accessing memory or I/O, or it consists of one system clock (T1) during CPU internal operations. The system clock is half the frequency of the Crystal oscillator (that is, an 8-MHz crystal produces 4 MHz or 250 nsec). For interfacing to slow memory or peripherals, optional Wait States (TW) may be inserted between T2 and T3.

Instruction (Op Code) Fetch Timing

Figure 9 illustrates the instruction (Op Code) fetch timing with no Wait States. An Op Code fetch cycle is externally indicated when the $\overline{\text{M1}}$ output pin is Low.

In the first half of T1, the address bus (A0 –A19) is driven from the contents of the Program Counter (PC). This address bus is the translated address output of the Z8X180 on-chip MMU.

In the second half of T1, the $\overline{\text{MREQ}}$. (Memory Request) and $\overline{\text{RD}}$ (Read) signals are asserted Low, enabling the memory.

The Op Code on the data bus is latched at the rising edge of T3 and the bus cycle terminates at the end of T3.

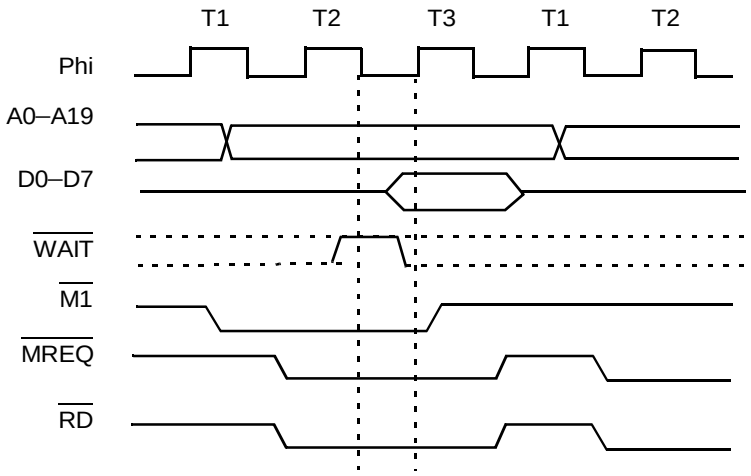

Figure 9. Op Code Fetch (without Wait State) Timing Diagram

Figure 10 illustrates the insertion of Wait States (TW) into the Op Code fetch cycle. Wait States (TW) are controlled by the external $\overline{\text{WAIT}}$ input combined with an on-chip programmable Wait State generator.

At the falling edge of T2 the combined $\overline{\text{WAIT}}$ input is sampled. If $\overline{\text{WAIT}}$ input is asserted Low, a Wait State (TW) is inserted. The address bus, $\overline{\text{MREQ}}$, $\overline{\text{RD}}$ and $\overline{\text{M1}}$ are held stable during Wait States. When WAIT is sampled inactive High at the falling edge of TW, the bus cycle enters T3 and completes at the end of T3.

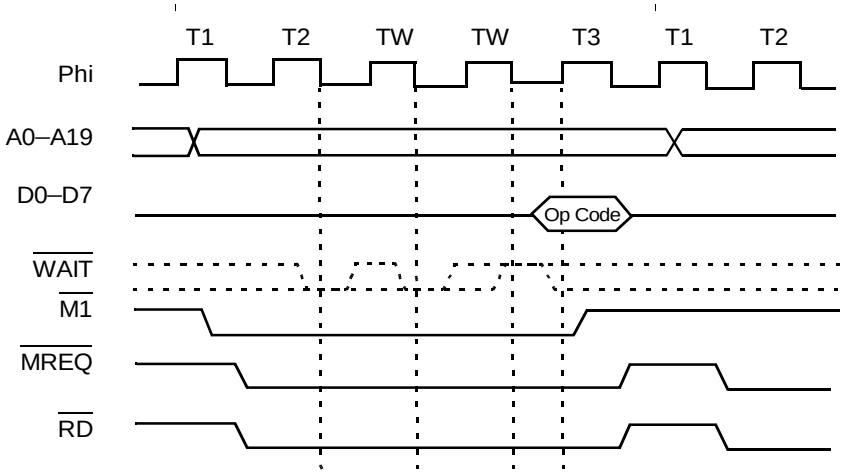

Figure 10. Op Code Fetch (with Wait State) Timing Diagram

Operand and Data Read/Write Timing

The instruction operand and data read/write timing differs from Op Code fetch timing in two ways:

- The $\overline{M1}$ output is held inactive
- The read cycle timing is relaxed by one-half clock cycle because data is latched at the falling edge of T3

Instruction operands include immediate data, displacement, and extended addresses, and contain the same timing as memory data reads.

During memory write cycles the $\overline{MREQ}$ signal goes active in the second half of T1. At the end of T1, the data bus is driven with the write data.

At the start of T2, the $\overline{WR}$ signal is asserted Low enabling the memory. $\overline{MREQ}$ and $\overline{WR}$ go inactive in the second half of T3 followed by disabling of the write data on the data bus.

Wait States (TW) are inserted as previously described for Op Code fetch cycles. Figure 11 illustrates the read/write timing without Wait States (Tw), while Figure 12 illustrates read/write timing with Wait States (TW).

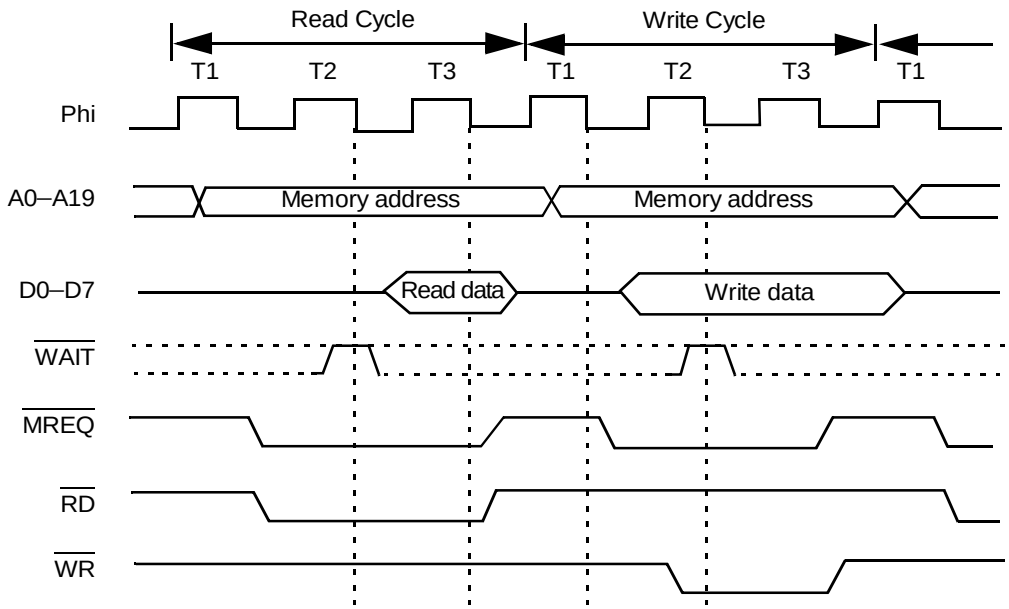

Figure 11. Memory Read/Write (without Wait State) Timing Diagram

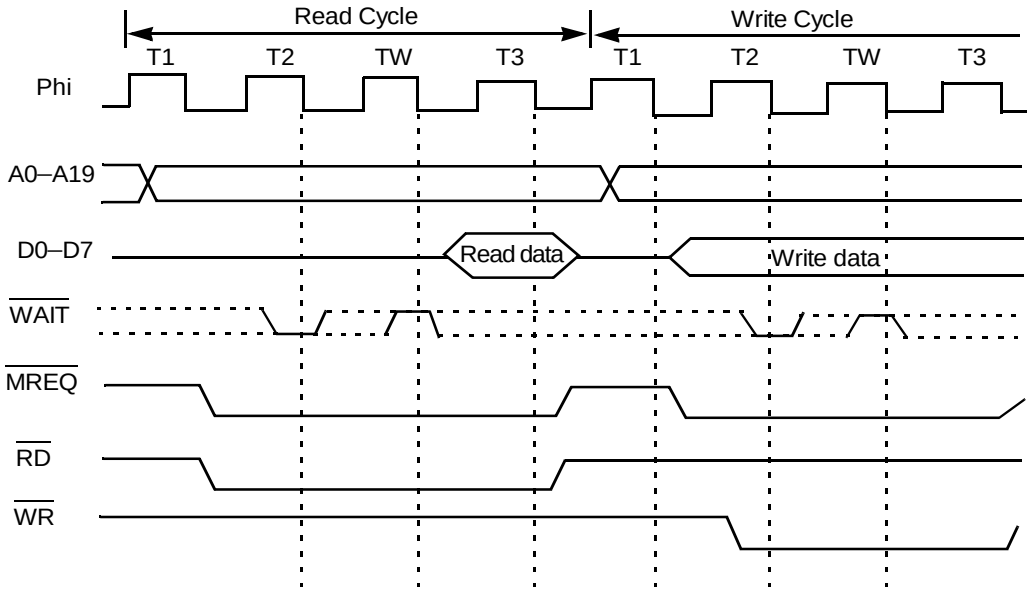

Figure 12. Memory Read/Write (with Wait State) Timing Diagram

I/O Read/Write Timing

I/O Read/Write operations differ from memory Read/Write operations in the following three ways:

- The $\overline{\text{IORQ}}$ (I/O Request) signal is asserted Low instead of the $\overline{\text{MREQ}}$ signal
- The 16-bit I/O address is not translated by the MMU
- A16–A19 are held Low

At least one Wait State (TW) is always inserted for I/O read and write cycles (except internal I/O cycles).

Figure 13 illustrates I/O read/write timing with the automatically inserted Wait State (TW).

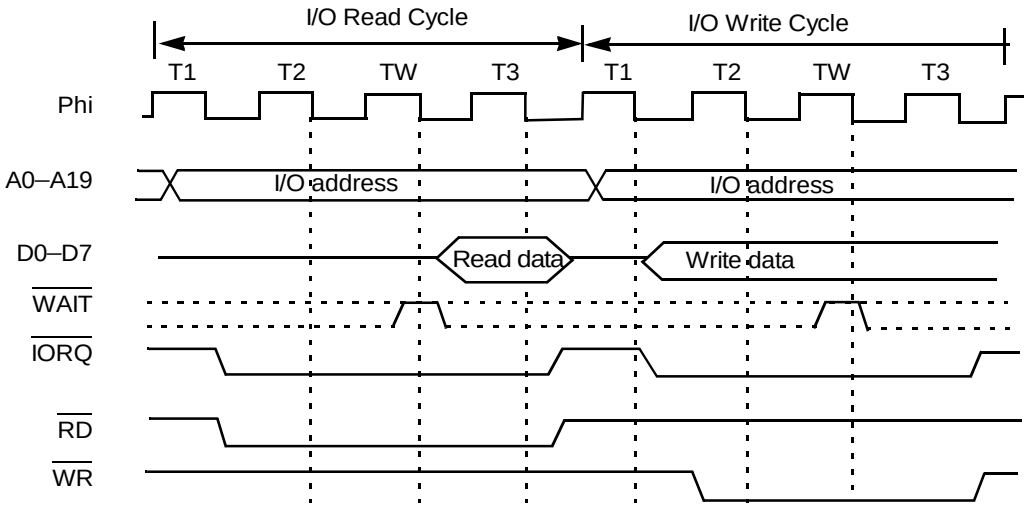

Figure 13. I/O Read/Write Timing Diagram

Basic Instruction Timing

An instruction may consist of a number of machine cycles including Op Code fetch, operand fetch, and data read/write cycles. An instruction may also include cycles for internal processes which make the bus IDLE. The example in Figure 14 illustrates the bus timing for the data transfer instruction LD (IX+d),g.

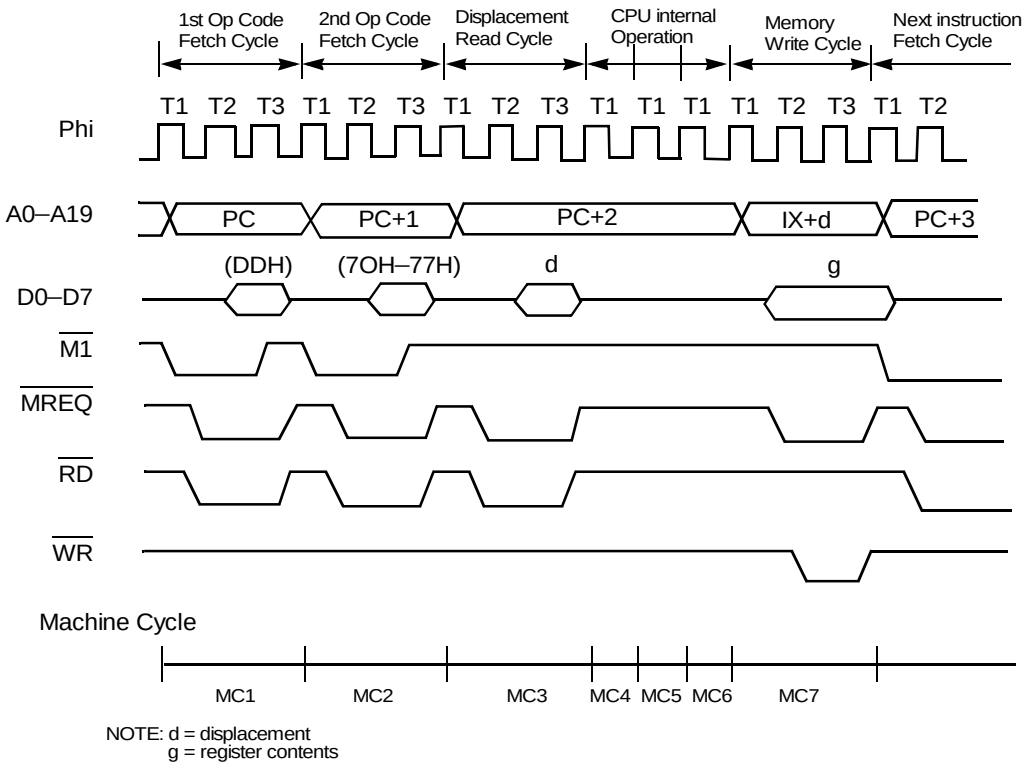

Figure 14. Instruction Timing Diagram

This instruction moves the contents of a CPU register (g) to the memory location with address computed by adding a signed 8-bit displacement (d) to the contents of an index register (IX).

The instruction cycle begins with the two machine cycles to read the two byte instruction Op Code as indicated by $\overline{M1}$ Low. Next, the instruction operand (d) is fetched.

The external bus is IDLE while the CPU computes the effective address. Finally, the computed memory location is written with the contents of the CPU register (g).

RESET Timing

Figure 15 depicts the Z8X180 hardware RESET timing. If the $\overline{\text{RESET}}$ pin is Low for six or more clock cycles, processing is terminated and the Z8X180 restarts execution from (logical and physical) address `00000H`.

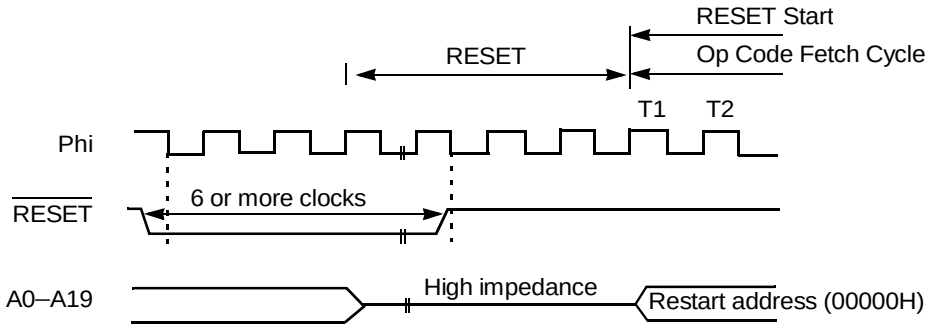

Figure 15. RESET Timing Diagram

$\overline{\text{BUSREQ}}$/$\overline{\text{BUSACK}}$ Bus Exchange Timing

The Z8X180 can coordinate the exchange of control, address and data bus ownership with another bus master. The alternate bus master can request the bus release by asserting the $\overline{\text{BUSREQ}}$ (Bus Request) input Low. After the Z8X180 releases the bus, it relinquishes control to the alternate bus master by asserting the $\overline{\text{BUSACK}}$ (Bus Acknowledge) output Low.

The bus may be released by the Z8X180 at the end of each machine cycle. In this context, a machine cycle consists of a minimum of three clock cycles (more if wait states are inserted) for Op Code fetch, memory read/write, and I/O read/write cycles. Except for these cases, a machine cycle corresponds to one clock cycle.

When the bus is released, the address (A0–A19), data (D0–D7), and control ($\overline{MREQ}$, $\overline{IORQ}$, $\overline{RD}$, and $\overline{WR}$) signals are placed in the high impedance state.

Dynamic RAM refresh is not performed when the Z8X180 has released the bus. The alternate bus master must provide dynamic memory refreshing if the bus is released for long periods of time.

Figure 16 illustrates $\overline{BUSREQ}$/$\overline{BUSACK}$ bus exchange during a memory read cycle. Figure 17 illustrates bus exchange when the bus release is requested during a Z8X180 CPU internal operation. $\overline{BUSREQ}$ is sampled at the falling edge of the system clock prior to T3, T1 and Tx (BUS RELEASE state). If $\overline{BUSREQ}$ is asserted Low at the falling edge of the clock state prior to Tx, another Tx is executed.

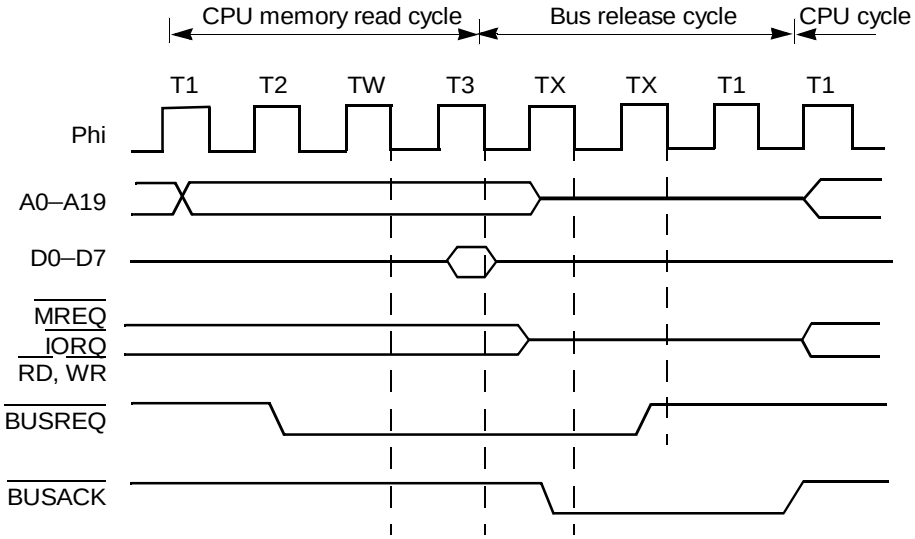

Figure 16. Bus Exchange Timing During Memory Read

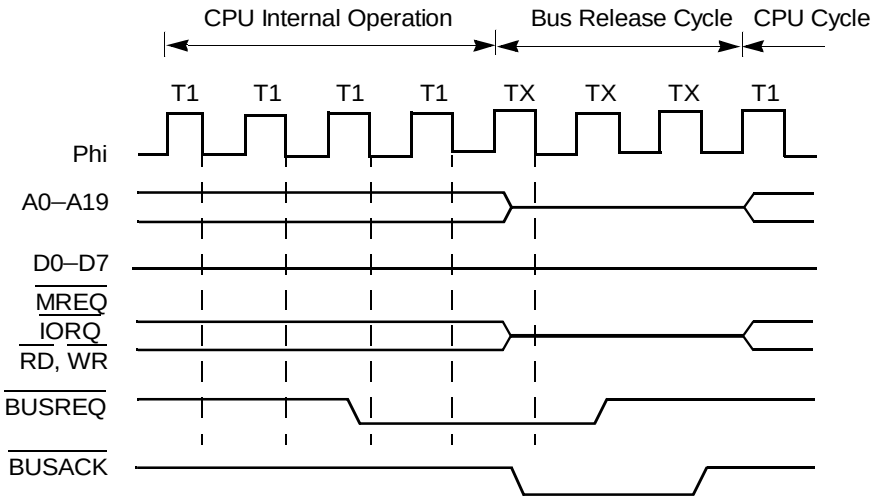

Figure 17. Bus Exchange Timing During CPU Internal Operation

Wait State Generator

To ease interfacing with slow memory and I/O devices, the Z8X180 uses Wait States (TW) to extend bus cycle timing. A Wait State(s) is inserted based on the combined (logical OR) state of the external $\overline{\text{WAIT}}$ input and an internal programmable wait state (TW) generator. Wait States (TW) can be inserted in both CPU execution and DMA transfer cycles.

When the external $\overline{\text{WAIT}}$ input is asserted Low, Wait State(s) (TW) are inserted between T2 and T3 to extend the bus cycle duration. The $\overline{\text{WAIT}}$ input is sampled at the falling edge of the system clock in T2 or TW. If the $\overline{\text{WAIT}}$ input is asserted Low at the falling edge of the system clock in TW, another TW is inserted into the bus cycle.

Note: $\overline{\text{WAIT}}$ input transitions must meet specified setup and hold times. This specification can easily be accomplished by

externally synchronizing $\overline{\text{WAIT}}$ input transitions with the rising edge of the system clock.

Dynamic RAM refresh is not performed during Wait States (TW) and thus system designs which use the automatic refresh function must consider the affects of the occurrence and duration of wait states (TW). Figure 18 depicts $\overline{\text{WAIT}}$ timing.

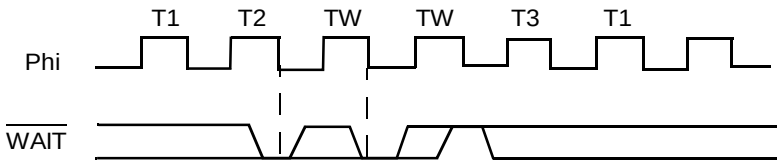

Figure 18. $\overline{\text{WAIT}}$ Timing Diagram

Programmable Wait State Insertion

In addition to the $\overline{\text{WAIT}}$ input, Wait States (TW) can also be inserted by program using the Z8X180 on-chip Wait State generator (see Figure 19. Wait State (TW) timing applies for both CPU execution and on-chip DMAC cycles.

By programming the four significant bits of the DMA/Wait Control Register (DCNTL) the number of Wait States, (TW) automatically inserted in memory and I/O cycles, can be separately specified. Bits 4 and 5 specify the number of Wait States (TW) inserted for I/O access and bits 6 and 7 specify the number of Wait States (TW) inserted for memory access. These bit pairs all 0–3 programmed Wait States for either I/O or memory access.

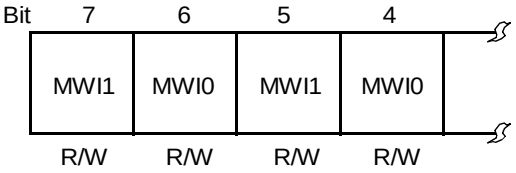

Figure 19. Memory and I/O Wait State Insertion (DCNTL – DMA/Wait Control Register)

The number of Wait States (TW) inserted in a specific cycle is the maximum of the number requested by the $\overline{\text{WAIT}}$ input, and the number automatically generated by the on-chip Wait State generator.

Bit 7, 6: MWI1 MWI0, (Memory Wait Insertion)

For CPU and DMAC cycles which access memory (including memory mapped I/O), zero to three Wait States may be automatically inserted depending on the programmed value in MWI1 and MWI0 as depicted in Table 3

Table 3. Memory Wait States

MW11	MWI0	The Number of Wait States
0	0	0
0	1	1
1	0	2
1	1	3

Bit 5, 4: IWI1, IWI0 (I/O Wait Insertion)

For CPU and DMA cycles which access external I/O (and interrupt acknowledge cycles), one to six Wait States (TW) may be automatically

inserted depending on the programmed value in IWI1 and IWI0. Refer to Table 4.

Table 4. Wait State Insertion

MWI1	MWI0	The Number of Wait States				
		For external I/O registers accesses	For internal I/O registers accesses	For $\overline{INT0}$ interrupt acknowledge cycles when $\overline{M1}$ is Low	For $\overline{INT1}$, $\overline{INT2}$ and internal interrupts acknowledge cycles (Note 2)	For $\overline{NMI}$ interrupt acknowledge cycles when $\overline{M1}$ is Low (Note 2)
0	0	1	0 (Note 1)	2	2	0
0	1	2		4		
1	0	3		5		
1	1	4		6		

Note:

1. For Z8X180 internal I/O register access (I/O addresses `0000H-003FH`), IWI1 and IWI0 do not determine wait state (TW) timing. For ASCI, CSI/O and PRT Data Register accesses, 0 to 4 Wait States (TW) are generated. The number of Wait States inserted during access to these registers is a function of internal synchronization requirements and CPU state. All other on-chip I/O register accesses (that is, MMU, DMAC, ASCI Control Registers, for instance.) have no Wait States inserted and thus require only three clock cycles.
2. For interrupt acknowledge cycles in which $\overline{M1}$ is High, such as interrupt vector table read and PC stacking cycle, memory access timing applies.

WAIT Input and RESET

During RESET, MWI1, MWI0 IWI1 and IWI0, are all `1`, selecting the maximum number of Wait States (TW) (three for memory accesses, four for external I/O accesses).

Also, the $\overline{\text{WAIT}}$ input is ignored during RESET. For example, if RESET is detected while the Z8X180 is in a Wait State (TW), the Wait Stated cycle in progress is aborted, and the RESET sequence initiated. Thus, $\overline{\text{RESET}}$ has higher priority than $\overline{\text{WAIT}}$.

HALT and Low Power Operation Modes (Z80180-Class Processors Only)

The Z80180 can operate in two different modes:

- HALT mode
- IOSTOP mode

and two low-power operation modes:

- SLEEP
- SYSTEM STOP

In all operating modes, the basic CPU clock (XTAL, EXTAL) must remain active.

HALT Mode

HALT mode is entered by execution of the HALT instruction (Op Code 76H) and has the following characteristics:

- The internal CPU clock remains active
- All internal and external interrupts can be received
- Bus exchange ($\overline{\text{BUSREQ}}$ and $\overline{\text{BUSACK}}$) can occur
- Dynamic RAM refresh cycle ($\overline{\text{RFSH}}$) insertion continues at the programmed interval
- I/O operations (ASCI, CSI/O and PRT) continue
- The DMAC can operate

- The HALT output pin is asserted Low
- The external bus activity consists of repeated dummy fetches of the Op Code following the HALT instruction.

Essentially, the Z80180 operates normally in HALT mode, except that instruction execution is stopped.

HALT mode can be exited in the following two ways:

- $\overline{\text{RESET}}$ Exit from HALT Mode

  If the $\overline{\text{RESET}}$ input is asserted Low for at least six clock cycles, HALT mode is exited and the normal $\overline{\text{RESET}}$ sequence (restart at address `00000H`) is initiated.

- Interrupt Exit from HALT mode

  When an internal or external interrupt is generated, HALT mode is exited and the normal interrupt response sequence is initiated.

If the interrupt source is masked (individually by enable bit, or globally by IEF1 state), the Z80180 remains in HALT mode. However, $\overline{\text{NMI}}$ interrupt initiates the normal $\overline{\text{NMI}}$ interrupt response sequence independent of the state of IEF1.

HALT timing is illustrated in Figure 20.

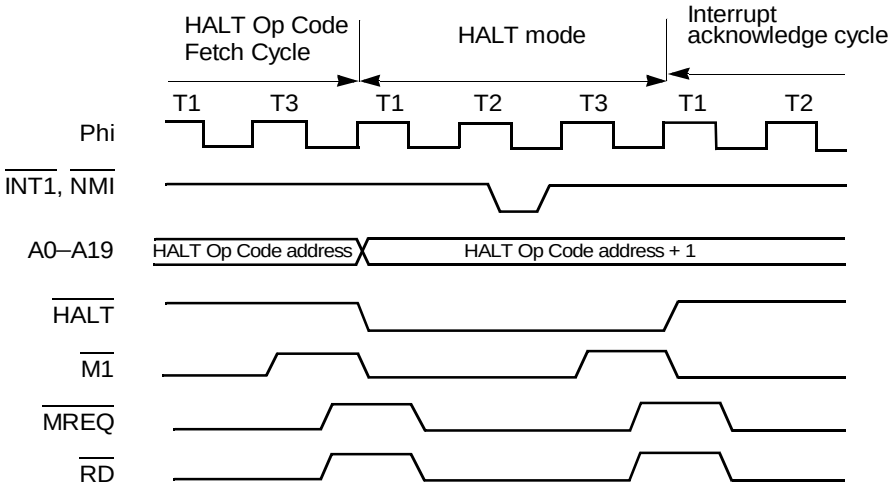

Figure 20. HALT Timing Diagram

SLEEP Mode

SLEEP mode is entered by execution of the 2-byte SLP instruction. SLEEP mode contains the following characteristics:

- The internal CPU clock stops, reducing power consumption
- The internal crystal oscillator does not stop
- Internal and external interrupt inputs can be received
- DRAM refresh cycles stop
- I/O operations using on-chip peripherals continue
- The internal DMAC stop
- $\overline{\text{BUSREQ}}$ can be received and acknowledged
- Address outputs go High and all other control signal outputs become inactive High

- Data Bus, 3-state

SLEEP mode is exited in one of two ways as described below.

- RESET Exit from SLEEP mode. If the $\overline{\text{RESET}}$ input is held Low for at least six clock cycles, it exits SLEEP mode and begins the normal RESET sequence with execution starting at address (logical and physical) `00000H`.

- Interrupt Exit from SLEEP mode. The SLEEP mode is exited by detection of an external ($\overline{\text{NMI}}$, $\overline{\text{INT0}}$, $\overline{\text{INT2}}$) or internal (ASCI, CSI/O, PRT) interrupt.

In case of $\overline{\text{NMI}}$, SLEEP mode is exited and the CPU begins the normal $\overline{\text{NMI}}$ interrupt response sequence.

In the case of all other interrupts, the interrupt response depends on the state of the global interrupt enable flag IEF1 and the individual interrupt source enable bit.

If the individual interrupt condition is disabled by the corresponding enable bit, occurrence of that interrupt is ignored and the CPU remains in the SLEEP mode.

Assuming the individual interrupt condition is enabled, the response to that interrupt depends on the global interrupt enable flag (IEF1). If interrupts are globally enabled (IEF1 is `1`) and an individually enabled interrupt occurs, SLEEP mode is exited and the appropriate normal interrupt response sequence is executed.

If interrupts are globally disabled (IEF1 is `0`) and an individually enabled interrupt occurs, SLEEP mode is exited and instruction execution begins with the instruction following the SLP instruction. This feature provides a technique for synchronization with high speed external events without incurring the latency imposed by an interrupt response sequence.

Figure 21 depicts SLEEP timing.

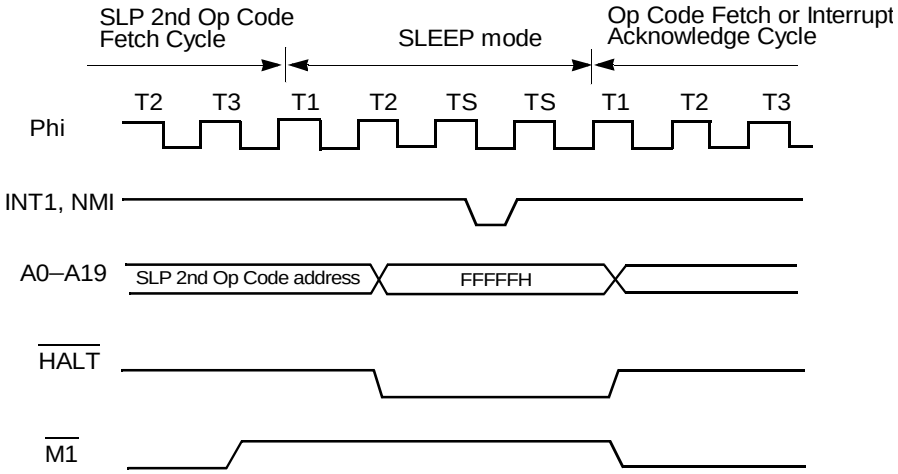

Figure 21. SLEEP Timing Diagram

IOSTOP Mode

IOSTOP mode is entered by setting the IOSTOP bit of the I/O Control Register (ICR) to `1`. In this case, on-chip I/O (ASCI, CSI/O, PRT) stops operating. However, the CPU continues to operate. Recovery from IOSTOP mode is by resetting the IOSTOP bit in ICR to `0`.

SYSTEM STOP Mode

SYSTEM STOP mode is the combination of SLEEP and IOSTOP modes. SYSTEM STOP mode is entered by setting the IOSTOP bit in ICR to `1` followed by execution of the SLP instruction. In this mode, on-chip I/O and CPU stop operating, reducing power consumption. Recovery from SYSTEM STOP mode is the same as recovery from SLEEP mode, noting that internal I/O sources, (disabled by IOSTOP) cannot generate a recovery interrupt.

Low Power Modes (Z8S180/Z8L180 only)

The following section is a detailed description of the enhancements to the Z8S180/L180 from the standard Z80180 in the areas of STANDBY, IDLE and STANDBY QUICK RECOVERY modes.

Add-On Features

There are five different power-down modes. SLEEP and SYSTEM STOP are inherited from the Z80180. In SLEEP mode, the CPU is in a stopped state while the on-chip I/Os are still operating. In I/O STOP mode, the on-chip I/Os are in a stopped state while leaving the CPU running. In SYSTEM STOP mode, both the CPU and the on-chip I/Os are in the stopped state to reduce current consumption. The Z8S180 features two additional power-down modes, STANDBY and IDLE, to reduce current consumption even further. The differences in these power-down modes are summarized in Table 5.

Table 5. Power-Down Modes (Z8S180/Z8L180-Class Processors Only)

Power-Down Modes	CPU Core	On-Chip I/O	Osc.	CLKOUT	Recovery Source	Recovery Time (Minimum)
SLEEP	Stop	Running	Running	Running	RESET, Interrupts	1.5 Clock
I/O STOP	Running	Stop	Running	Running	By Programming	–
SYSTEM STOP	Stop	Stop	Running	Running	RESET, Interrupts	1.5 Clock
IDLE †	Stop	Stop	Running	Stop	RESET, Interrupts, BUSREQ	8 + 1.5 Clock
STANDBY †	Stop	Stop	Stop	Stop	RESET, Interrupts, BUSREQ	2^{17} + 1.5 Clock (Normal Recovery) 2^{6} + 1.5 Clock (Quick Recovery)

† IDLE and STANDBY modes are only offered in the Z8S180. The minimum recovery time can be achieved if INTERRUPT is used as the Recovery Source.

STANDBY Mode

The Z8S180/Z8L180 is designed to save power. Two low-power programmable power-down modes have been added:

- STANDBY mode
- IDLE mode

The STANDBY/IDLE mode is selected by multiplexing bits 1 and 3 of the CPU Control Register (CCR, I/O Address = `1FH`).

To enter STANDBY mode:

1. Set bits 6 and 3 to `1` and `0`, respectively.
2. Set the I/O STOP bits (bit 5 of ICR, I/O Address = `3FH`) to `1`.
3. Execute the SLEEP instruction.

When the device is in STANDBY mode, it performs similar to the SYSTEM STOP mode as it exists on the Z80180-class processors, except that the STANDBY mode stops the external oscillator, internal clocks and reduces power consumption to 50 µA (typical).

Because the clock oscillator has been stopped, a restart of the oscillator requires a period of time for stabilization. An 18-bit counter has been added in the Z8S180Z8L180 to allow for oscillator stabilization. When the part receives an external IRQ or BUSREQ during STANDBY mode, the oscillator is restarted and the timer counts down 2^{17} counts before acknowledgment is sent to the interrupt source.

The recovery source must remain asserted for the duration of the 2^{17} count, otherwise STANDBY restarts.

STANDBY Mode Exit with BUS REQUEST

Optionally, if the BREXT bit (D5 of CPU Control Register) is set to 1, the Z8S180 exits STANDBY mode when the $\overline{\text{BUSREQ}}$ input is asserted. The crystal oscillator is then restarted. An internal counter automatically provides time for the oscillator to stabilize, before the internal clocking and the system clock output of the Z8S180 are resumed.

The Z8S180 relinquishes the system bus after the clocking is resumed by:

- 3-State the address outputs A19–A0
- 3-State the bus control outputs $\overline{\text{MREQ}}$, $\overline{\text{IORQ}}$, $\overline{\text{RD}}$, and $\overline{\text{WR}}$
- Asserting $\overline{\text{BUSACK}}$

The Z8S180 regains the system bus when $\overline{\text{BUSREQ}}$ is deactivated. The address outputs and the bus control outputs are then driven High. The STANDBY mode is exited.

If the BREXT bit of the CPU Control Register (CCR) is cleared, asserting the $\overline{\text{BUSREQ}}$ does not cause the Z8S180/Z8L180-class processors to exit STANDBY mode.

If STANDBY mode is exited because of a reset or an external interrupt, the Z8S180/Z8L180-class processors remains relinquished from the system bus as long as $\overline{\text{BUSREQ}}$ is active.

STANDBY Mode EXit with External Interrupts

STANDBY mode can be exited by asserting input $\overline{\text{NMI}}$. The STANDBY mode may also exit by asserting $\overline{\text{INT0}}$. $\overline{\text{INT1}}$ or $\overline{\text{INT2}}$, depending on the conditions specified in the following paragraphs.

$\overline{\text{INT0}}$ wake-up requires assertion throughout duration of clock stabilization time (2^{17} clocks).

If exit conditions are met, the internal counter provides time for the crystal oscillator to stabilize, before the internal clocking and the system clock output within the Z8S180/Z8L180-class processors resume.

- Exit with Non-Maskable Interrupts

  If $\overline{\text{NMI}}$ is asserted, the CPU begins a normal NMI interrupt acknowledge sequence after clocking resumes.

- Exit with External Maskable Interrupts

  If an External Maskable Interrupt input is asserted, the CPU responds according to the status of the Global Interrupt Enable Flag IEF1 (determined by the ITE1 bit) and the settings of the corresponding interrupt enable bit in the Interrupt/Trap Control Register (ITC: I/O Address = 34H).

If an interrupt source is disabled in the ITC, asserting the corresponding interrupt input does not cause the Z8S180/Z8L180-class processors to exit STANDBY mode. This condition is true regardless of the state of the Global Interrupt Enable Flag IEF1.

If the Global Interrupt Enable Flag IEF1 is set to 1, and if an interrupt source is enabled in the ITC, asserting the corresponding interrupt input causes the Z8S180/Z8L180-class processors to exit STANDBY mode. The CPU performs an interrupt acknowledge sequence appropriate to the input being asserted when clocking is resumed if:

- The interrupt input follows the normal interrupt daisy-chain protocol
- The interrupt source is active until the acknowledge cycle is complete

If the Global Interrupt Enable Flag IEF1 is disabled (reset to 0) and if an interrupt source is enabled in the ITC, asserting the corresponding interrupt input still causes the Z8S180/Z8L180-class processors to exit STANDBY mode. The CPU proceeds to fetch and execute instructions that follow the SLEEP instruction when clocking resumes.

If the Extend Maskable Interrupt input is not active until clocking resumes, the Z8S180/Z8L180-class processors do not exit STANDBY mode. If the Non-Maskable Interrupt ($\overline{NMI}$) is not active until clocking resumes, the Z8S180/Z8L180-class processors still exits the STANDBY mode even if the interrupt sources go away before the timer times out, because $\overline{NMI}$ is edge-triggered. The condition is latched internally when $\overline{NMI}$ is asserted Low.

IDLE Mode

IDLE mode is another power-down mode offered by the Z8S180/Z8L180-class processors.

1. Set bits 6 and 3 to `0` and `1`, respectively.
2. Set the I/O STOP bit (bit 5 of ICR, I/O Address = `3FH` to 1.
3. Execute the SLEEP instruction

When the part is in IDLE mode, the clock oscillator is kept oscillating, but the clock to the rest of the internal circuit, including the CLKOUT, is stopped completely. IDLE mode is exited in a similar way as STANDBY mode, using RESET, BUS REQUEST or EXTERNAL INTERRUPTS,

except that the 2^{17} bit wake-up timer is bypassed. All control signals are asserted eight clock cycles after the exit conditions are gathered.

STANDBY-QUICK RECOVERY Mode

STANDBY-QUICK RECOVERY mode is an option offered in STANDBY mode to reduce the clock recovery time in STANDBY mode from 2^{17} clock cycles (4 µs at 33 MHz) to 2^{6} clock cycles (1.9 µs at 33 MHz). This feature can only be used when providing an oscillator as clock source.

To enter STANDBY-QUICK RECOVERY mode:

1. Set bits 6 and 3 to `1` and `1`, respectively.
2. Set the I/O STOP bit (bit 5 of ICR, I/O Address = `3FH`) to `1`.
3. Execute the SLEEP instruction

When the part is in STANDBY-QUICK RECOVERY mode, the operation is identical to STANDBY mode except when exit conditions are gathered, using RESET, BUS REQUEST or EXTERNAL INTERRUPTS. The clock and other control signals are recovered sooner than the STANDBY mode.

Note: If STANDBY-QUICK RECOVERY is enabled, the user must ensure stable oscillation is obtained within 64 clock cycles

Internal I/O Registers

The Z8X180 internal I/O Registers occupy 64 I/O addresses (including reserved addresses). These registers access the internal I/O modules (ASCI, CSI/O, PRT) and control functions (DMAC, DRAM refresh, interrupts, wait state generator, MMU and I/O relocation).

To avoid address conflicts with external I/O, the Z8X180 internal I/O addresses can be relocated on 64-byte boundaries within the bottom 256 bytes of the 64KB I/O address space.

I/O Control Register (ICR)

ICR allows relocating of the internal I/O addresses. ICR also controls enabling/disabling of the IOSTOP mode.

I/O Control Register (ICR: 3FH)

Bit	7	6	5	4	3	2	1	0
Bit/Field	IOA7	IOA6	IOSTP	—	—	—	—	—
R/W	R/W	R/W	R/W					
Reset	0	0	0					

R = Read W = Write X = Indeterminate ? = Not Applicable

Bit Position	Bit/Field	R/W	Value	Description
7–6	IOA7:6	R/W		IOA7 and IOA6 relocate internal I/O as depicted in Figure . The high-order 8 bits of 16-bit internal I/O addresses are always 0. IOA7 and IOA6 are cleared to 0 during RESET.
5	IOSTP	R/W		IOSTOP mode is enabled when IOSTP is set to 1. Normal. I/O operation resumes when IOSTP is reset to 0.

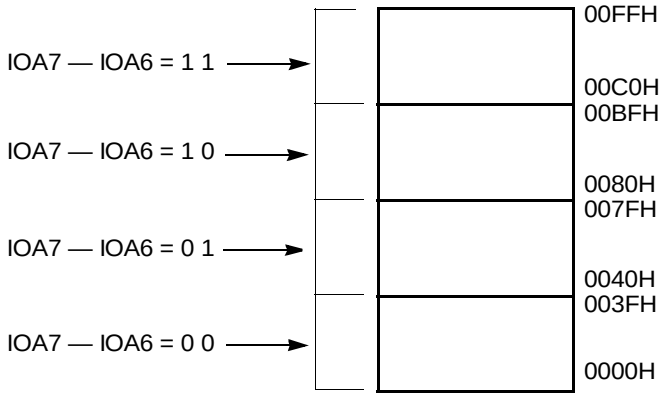

Figure 22. I/O Address Relocation

Internal I/O Registers Address Map

The internal I/O register addresses are described in Table 6 and Table 7. These addresses are relative to the 64-byte boundary base address specified in ICR.

I/O Addressing Notes

The internal I/O register addresses are located in the I/O address space from `0000H` to `00FFH` (16-bit I/O addresses). Thus, to access the internal I/O registers (using I/O instructions), the high-order 8 bits of the 16-bit I/O address must be `0`.

The conventional I/O instructions (OUT (m), A/IN A, (m) / OUTI/INI, for example) place the contents of a CPU register on the high-order 8 bits of the address bus, and thus may be difficult to use for accessing internal I/O registers.

For efficient internal I/O register access, a number of new instructions have been added, which force the high-order 8 bits of the 16-bit I/O

address to 0. These instructions are IN0, OUT0, OTIM, OTIMR, OTDM, OTDMR and TSTIO (see Instruction Set).

When writing to an internal I/O register, the same I/O write occurs on the external bus. However, the duplicate external I/O write cycle exhibits internal I/O write cycle timing. For example, the $\overline{\text{WAIT}}$ input and programmable Wait State generator are ignored. Similarly, internal I/O read cycles also cause a duplicate external I/O read cycle. However, the external read data is ignored by the Z8X180.

Normally, external I/O addresses should be chosen to avoid overlap with internal I/O addresses and duplicate I/O accesses.

Table 6. I/O Address Map for Z80180-Class Processors Only

	Register	Mnemonic	Address		
			Binary	Hex	Page
ASCI	ASCI Control Register A Ch 0	CNTLA0	XX000000	00H	125
	ASCI Control Register A Ch 1	CNTLA1	XX000001	01H	128
	ASCI Control Register B Ch 0	CNTLB0	XX000010	02H	132
	ASCI Control Register B Ch 1	CNTLB1	XX000011	03H	132
	ASCI Status Register Ch 0	STAT0	XX000100	04H	120
	ASCI Status Register Ch 1	STAT1	XX000101	05H	123
	ASCI Transmit Data Register Ch 0	TDR0	XX000110	06H	118
	ASCI Transmit Data Register Ch 1	TDR1	XX000111	07H	118
	ASCI Receive Data Register Ch 0	RDR0	XX001000	08H	119
	ASCI Receive Data Register Ch 1	RDR1	XX001001	09H	119
CSI/O	CSI/O Control Register	CNTR	XX001010	0AH	147
	CSI/O Transmit/Receive Data Register	TRD	XX1011	0BH	149

Table 6. I/O Address Map for Z80180-Class Processors Only (Continued)

	Register	Mnemonic	Address		
			Binary	Hex	Page
Timer	Data Register Ch 0 L	TMDR0L	XX001100	0CH	159
	Data Register Ch 0 H	TMDR0H	XX001101	0DH	159
	Reload Register Ch 0 L	RLDR0L	XX001110	0EH	159
	Reload Register Ch 0 H	RLDR0H	XX001111	0FH	159
	Timer Control Register	TCR	XX010000	10H	161
	Reserved		XX010001	11H	
			⇕	⇕	
			XX010011	13H	
	Data Register Ch 1 L	TMDR1L	XX010100	14H	160
	Data Register Ch 1 H	TMDR1H	XX010101	15H	160
	Reload Register Ch 1 L	RLDR1L	XX010110	16H	159
	Reload Register Ch 1 H	RLDR1H	XX010111	17H	159
Others	Free Running Counter	FRC	XX011000	18H	172
	Reserved		XX011001	19H	
			⇕	⇕	
			XX011111	1FH	

Table 6. I/O Address Map for Z80180-Class Processors Only (Continued)

	Register	Mnemonic	Address		
			Binary	Hex	Page
DMA	DMA Source Address Register Ch 0L	SAR0L	XX100000	20H	93
	DMA Source Address Register Ch 0H	SAR0H	XX100001	21H	93
	DMA Source Address Register Ch 0B	SAR0B	XX100010	22H	93
	DMA Destination Address Register Ch 0L	DAR0L	XX100011	23H	94
	DMA Destination Address Register Ch 0H	DAR0H	XX100100	24H	94
	DMA Destination Address Register Ch 0B	DAR0B	XX100101	25H	94
	DMA Byte Count Register Ch 0L	BCR0L	XX100110	26H	94
	DMA Byte Count Register Ch 0H	BCR0H	XX100111	27H	94
	DMA Memory Address Register Ch 1L	MAR1L	XX101000	28H	94
	DMA Memory Address Register Ch 1H	MAR1H	XX101001	29H	94
	DMA Memory Address Register Ch 1B	MAR1B	XX101010	2AH	94
	DMA I/0 Address Register Ch 1L	IAR1L	XX101011	2BH	102
	DMA I/0 Address Register Ch 1H	IAR1H	XX101100	2CH	102
	Reserved		XX101101	2DH	
	DMA Byte Count Register Ch 1L	BCR1L	XX101110	2EH	94
	DMA Byte Count Register Ch 1H	BCR1H	XX101111	2FH	94
	DMA Status Register	DSTAT	XX110000	30H	95
	DMA Mode Register	DMODE	XX110001	31H	97
	DMA/WAIT Control Register	DCNTL	XX110010	32H	101

Table 6. I/O Address Map for Z80180-Class Processors Only (Continued)

	Register	Mnemonic	Address		
			Binary	Hex	Page
INT	IL Register (Interrupt Vector Low Register)	IL	XX110011	33H	67
	INT/TRAP Control Register	ITC	XX110100	34H	68
	Reserved		XX110101	35H	
Refresh	Refresh Control Register	RCR	XX110110	36H	88
	Reserved		XX110111	37H	
MMU	MMU Common Base Register	CBR	XX111000	38H	61
	MMU Bank Base Register	BBR	XX111001	39H	62
	MMU Common/Bank Area Register	CBAR	XX111010	3AH	60
I/O	Reserved		XX111011	3BH	
			⇕	⇕	
			XX111101	3DH	
	Operation Mode Control Register	OMCR	XX111110	3EH	15
	I/O Control Register	ICR	XX111111	3FH	42

Table 7. I/O Address Map (Z8S180/Z8L180-Class Processors Only)

	Register	Mnemonic	Address		
			Binary	Hex	Page
ASCI	ASCI Control Register A Ch 0	CNTLA0	XX000000	00H	125
	ASCI Control Register A Ch 1	CNTLA1	XX000001	01H	128
	ASCI Control Register B Ch 0	CNTLB0	XX000010	02H	132
	ASCI Control Register B Ch 1	CNTLB1	XX000011	03H	132
	ASCI Status Register Ch 0	STAT0	XX000100	04H	120
	ASCI Status Register Ch 1	STAT1	XX000101	05H	123
	ASCI Transmit Data Register Ch 0	TDR0	XX000110	06H	118
	ASCI Transmit Data Register Ch 1	TDR1	XX000111	07H	118
	ASCI Receive Data Register Ch 0	RDR0	XX001000	08H	119
	ASCI Receive Data Register Ch 1	RDR1	XX001001	09H	119
	ASCI0 Extension Control Register 0	ASEXT0	XX010010	12H	135
	ASCI1 Extension Control Register 1	ASEXT1	XX010011	13H	136
	ASCI0 Time Constant Low	ASTC0L	XX011010	1AH	137
	ASCI0 Time Constant High	ASTC0H	XX001011	1BH	137
	ASCI1 Time Constant Low	ASCT1L	XX001100	1CH	138
	ASCI1 Time Constant High	ASCT1H	XX001101	1DH	138
CSI0	CSI0 Control Register	CNTR	XX001010	0AH	147
	CSI0 Transmit/Receive Data Register	TRD	XX1011	0BH	149

Table 7. I/O Address Map (Z8S180/Z8L180-Class Processors Only) (Continued)

	Register	Mnemonic	Address		
			Binary	Hex	Page
Timer	Data Register Ch 0 L	TMDR0L	XX001100	0CH	159
	Data Register Ch 0 H	TMDR0H	XX001101	0DH	159
	Reload Register Ch 0 L	RLDR0L	XX001110	0EH	159
	Reload Register Ch 0 H	RLDR0H	XX001111	0FH	159
	Timer Control Register	TCR	XX010000	10H	161
	Reserved		XX010001	11H	
	Data Register Ch 1 L	TMDR1L	XX010100	14H	160
	Data Register Ch 1 H	TMDR1H	XX010101	15H	160
	Reload Register Ch 1 L	RLDR1L	XX010110	16H	160
	Reload Register Ch 1 H	RLDR1H	XX010111	17H	160
Others	Free Running Counter	FRC	XX011000	18H	172
	Reserved		XX011001	19H	
			⇕	⇕	
			XX011111	1DH	
	Clock Multiplier Register	CMR	XX011110	1EH	52
	CPU Control Register	CCR	XX011111	1FH	53

Table 7. I/O Address Map (Z8S180/Z8L180-Class Processors Only) (Continued)

	Register	Mnemonic	Address		
			Binary	Hex	Page
DMA	DMA Source Address Register Ch 0L	SAR0L	XX100000	20H	93
	DMA Source Address Register Ch 0H	SAR0H	XX100001	21H	93
	DMA Source Address Register Ch 0B	SAR0B	XX100010	22H	93
	DMA Destination Address Register Ch 0L	DAR0L	XX100011	23H	94
	DMA Destination Address Register Ch 0H	DAR0H	XX100100	24H	94
	DMA Destination Address Register Ch 0B	DAR0B	XX100101	25H	94
	DMA Byte Count Register Ch 0L	BCR0L	XX100110	26H	94
	DMA Byte Count Register Ch 0H	BCR0H	XX100111	27H	94
	DMA Memory Address Register Ch 1L	MAR1L	XX101000	28H	94
	DMA Memory Address Register Ch 1H	MAR1H	XX101001	29H	94
	DMA Memory Address Register Ch 1B	MAR1B	XX101010	2AH	94
	DMA I/O Address Register Ch 1L	IAR1L	XX101011	2BH	102
	DMA I/O Address Register Ch 1H	IAR1H	XX101100	2CH	102
	DMA I/O Address Register Ch 1	IAR1B	XX101101	2DH	94
	DMA Byte Count Register Ch 1L	BCR1L	XX101110	2EH	94
	DMA Byte Count Register Ch 1H	BCR1H	XX101111	2FH	94
	DMA Status Register	DSTAT	XX110000	30H	95
	DMA Mode Register	DMODE	XX110001	31H	97
	DMA/WAIT Control Register	DCNTL	XX110010	32H	101

Table 7. I/O Address Map (Z8S180/Z8L180-Class Processors Only) (Continued)

	Register	Mnemonic	Address		
			Binary	Hex	Page
INT	IL Register (Interrupt Vector Low Register)	IL	XX110011	33H	67
	INT/TRAP Control Register	ITC	XX110100	34H	68
	Reserved		XX110101	35H	
Refresh	Refresh Control Register	RCR	XX110110	36H	88
	Reserved		XX110111	37H	
MMU	MMU Common Base Register	CBR	XX111000	38H	61
	MMU Bank Base Register	BBR	XX111001	39H	62
	MMU Common/Bank Area Register	CBAR	XX111010	3AH	60
I/O	Reserved		XX111011	3BH	
			⇕	⇕	
			XX111101	3DH	
	Operation Mode Control Register	OMCR	XX111110	3EH	15
	I/O Control Register	ICR	XX111111	3FH	42

Clock Multiplier Register (CMR: 1EH) (Z8S180/L180-Class Processors Only)

Bit	7	6						0
Bit/Field	X2	Reserved						
R/W	R/W	?						
Reset	0	1						

Note: R = Read W = Write X = Indeterminate ? = Not Applicable

Bit Position	Bit/Field	R/W	Value	Description
7	X2 Clock Multiplier Mode	R/W		X2 Clock Multiplier Mode
			0	Disable
			1	Enable
6–0	Reserved	?	?	Reserved

CPU Control Register (CCR: 1FH) (Z8S180/L180-Class Processors Only)

Bit	7	6	5	4	3	2	1	0
Bit/Field	Clock Divide	STAND BY/ IDLE Enable	BREXT	LNPHI	STAND BY/ IDLE Enable	LNIO	LNCPU CTL	LNAD/ DATA
R/W	R/W	R/W	R/W	R/W	R/W	R/W	R/W	R/W
Reset	0	0	0	0	0	0	0	0

Note: R = Read W = Write X = Indeterminate ? = Not Applicable

Bit Position	Bit/Field	R/W	Value	Description
7	Clock Divide	R/W	0 1	XTAL/2 XTAL/1
6	STANDBY /IDLE Mode	R/W	 00 01 10 11	In conjunction with Bit 3 No STANDBY IDLE after SLEEP STANDBY after SLEEP STANDBY after SLEEP 64 Cycle Exit (Quick Recovery)
5	BREXT	R/W	0 1	Ignore BUSREQ in STANDBY/IDLE STANDBY/IDLE exit on BUSREQ
4	LNPHI	R/W	0 1	Standard Drive 33% Drive on EXTPHI Clock
3	STANDBY /IDLE Mode	R/W	 00 01 10 11	In conjunction with Bit 6 No STANDBY IDLE after SLEEP STANDBY after SLEEP STANDBY after SLEEP 64 Cycle Exit (Quick Recovery)

Bit Position	Bit/Field	R/W	Value	Description
2	LNIO	R/W	0 1	Standard Drive 33% Drive on certain external I/O
1	LNCPUCTL	R/W	0 1	Standard Drive 33% Drive on CPU control signals
0	LNAD/ DATA	R/W	0 1	Standard Drive 33% drive on A10–A0, D7–D0

Memory Management Unit (MMU)

The Z8X180 features an on-chip MMU which performs the translation of the CPU 64KB (16-bit addresses `0000H` to `FFFFH`) logical memory address space into a 1024KB (20-bit addresses `00000H` to `FFFFFH`) physical memory address space. Address translation occurs internally in parallel with other CPU operation.

Logical Address Spaces

The 64KB CPU logical address space is interpreted by the MMU as consisting of up to three separate logical address areas, Common Area 0, Bank Area, and Common Area 1.

As depicted in Figure 23, a variety of logical memory configurations are possible. The boundaries between the Common and Bank Areas can be programmed with 4KB resolution.

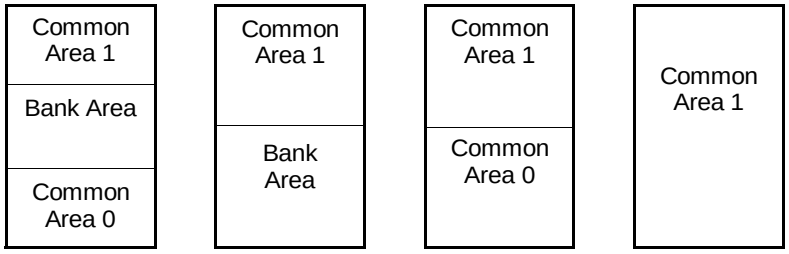

Figure 23. Logical Address Mapping Examples

Logical to Physical Address Translation

Figure 24 illustrates an example in which the three logical address space portions are mapped into a 1024KB physical address space. The important points to note are that Common and Bank Areas can overlap and that Common Area 1 and Bank Area can be freely relocated (on 4KB physical address boundaries). Common Area 0 (if it exists) is always based at physical address `00000H`.

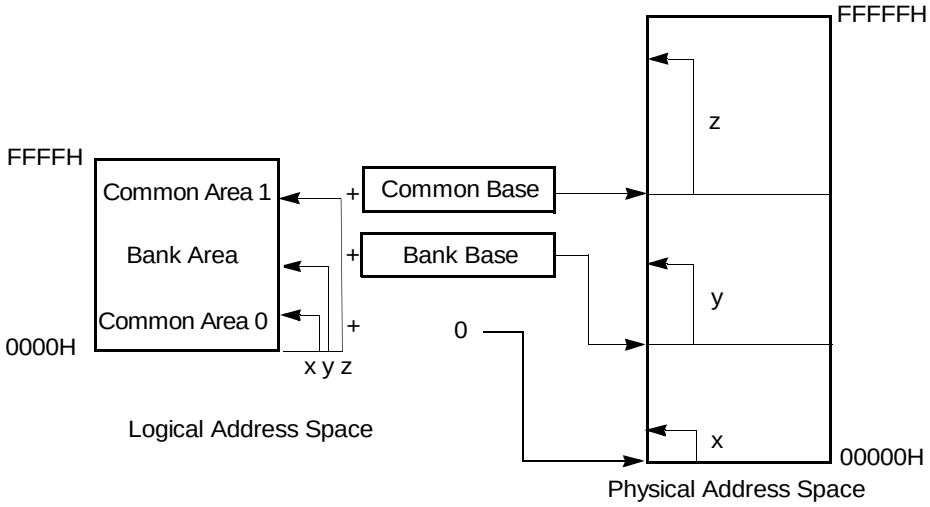

Figure 24. Physical Address Transition

MMU Block Diagram

The MMU block diagram is depicted in Figure 25. The MMU translates internal 16-bit logical addresses to external 20-bit physical addresses.

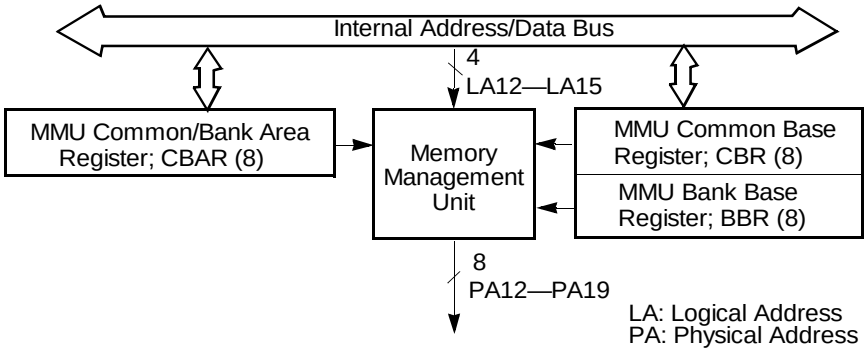

Figure 25. MMU Block Diagram

Whether address translation (Figure 26) takes place depends on the type of CPU cycle as follows.

- Memory Cycles

  Address Translation occurs for all memory access cycles including instruction and operand fetches, memory data reads and writes, hardware interrupt vector fetch, and software interrupt restarts.

- I/O Cycles

  The MMU is logically bypassed for I/O cycles. The 16-bit logical I/O address space corresponds directly with the 16-bit physical I/O address space. The four high-order bits (A16–A19) of the physical address are always `0` during I/O cycles.

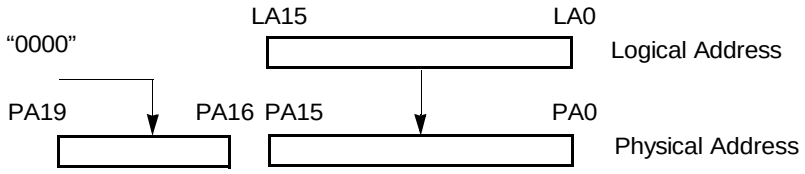

Figure 26. I/O Address Translation

- DMA Cycles

  When the Z8X180 on-chip DMAC is using the external bus, the MMU is physically bypassed. The 20-bit source and destination registers in the DMAC are directly output on the physical address bus (A0–A19).

MMU Registers

Three MMU registers are used to program a specific configuration of logical and physical memory.

- MMU Common/Bank Area Register (CBAR)
- MMU Common Base Register (CBR)
- MMU Bank Base Register (BBR)

CBAR is used to define the logical memory organization, while CBR and BBR are used to relocate logical areas within the 1024KB physical address space. The resolution for both setting boundaries within the logical space and relocation within the physical space is 4KB.

The CA field of CBAR determines the start address of Common Area 1 (Upper Common) and by default, the end address of the Bank Area. The BA field determines the start address of the Bank Area and by default, the end address of Common Area 0 (Lower Common).

The CA and BA fields of CBAR may be freely programmed subject only to the restriction that CA may never be less than BA. Figures 27 and 28 illustrate examples of logical memory organizations associated with different values of CA and BA.

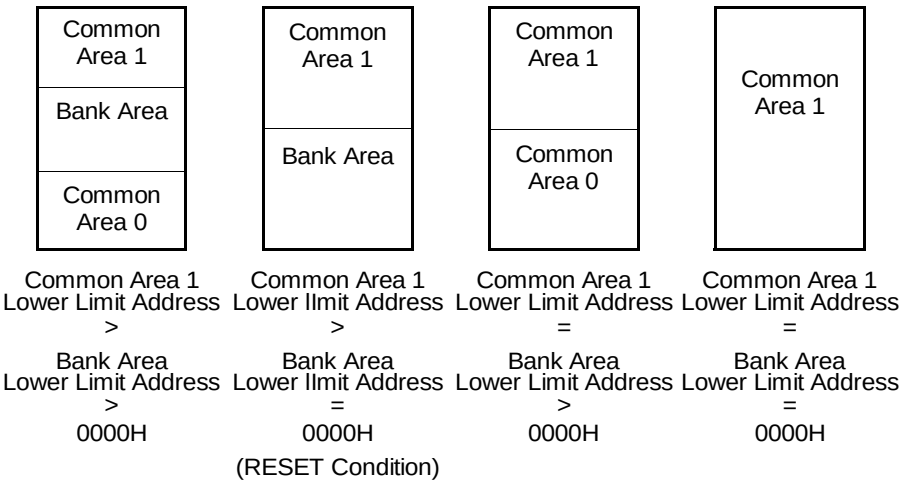

Figure 27. Logical Memory Organization

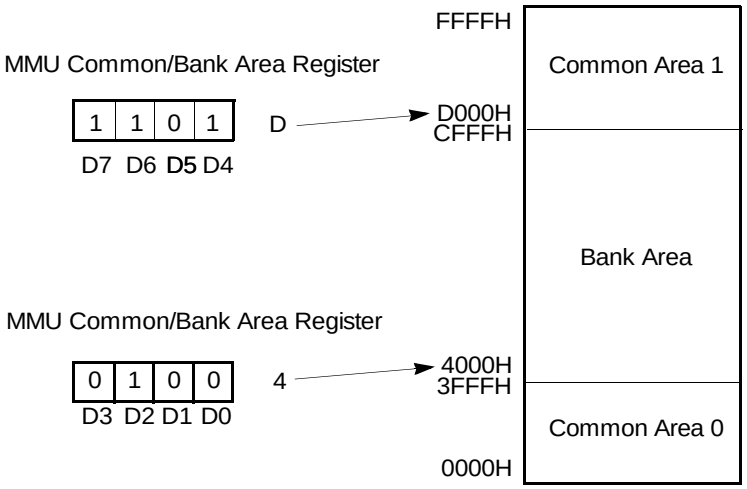

Figure 28. Logical Space Configuration (Example)

MMU Register Description

MMU Common/Bank Area Register (CBAR)

CBAR specifies boundaries within the Z8X180 64KB logical address space for up to three areas; Common Area 0, Bank Area and Common Area 1.

MMU Common/Bank Area Register (CBAR: 3AH)

Bit	7	6	5	4	3	2	1	0
Bit/Field	CA3	CA2	CA1	CA0	BA3	BA2	BA1	BA0
R/W	R/W	R/W	R/W	R/W	R/W	R/W	R/W	R/W
Reset	1	1	1	1	0	0	0	0

Note: R = Read W = Write X = Indeterminate ? = Not Applicable

Bit Position	Bit/Field	R/W	Value	Description
7–4	CA7–4	R/W		CA specifies the start (low) address (on 4KB boundaries) for the Common Area 1. This also determines the last address of the Bank Area.
3–0	BA3–0	R/W		BA specifies the start (low) address (on 4KB boundaries) for the Bank Area. This also determines the last address of the Common Area 0.

MMU Common Base Register (CBR)

CBR specifies the base address (on 4K boundaries) used to generate a 20-bit physical address for Common Area 1 accesses. All bits of CBR are reset to 0 during RESET.

MMU Common Base Register (CBR: 38H)

Bit	7	6	5	4	3	2	1	0
Bit/Field	CB7	CB6	CB5	CB4	CB3	CB2	CB1	CB0
R/W	R/W	R/W	R/W	R/W	R/W	R/W	R/W	R/W
Reset	0	0	0	0	0	0	0	0

Note: R = Read W = Write X = Indeterminate ? = Not Applicable

Bit Position	Bit/Field	R/W	Value	Description
7–0	CB7–0	R/W		CBR specifies the base address (on 4KB boundaries) used to generate a 20-bit physical address for Common Area 1 accesses.

MMU Bank Base Register (BBR)

BBR specifies the base address (on 4KB boundaries) used to generate a 20-bit physical address for Bank Area accesses. All bits of BBR are reset to `0` during RESET.

MMU Bank Base Register (BBR: 39H)

Bit	7	6	5	4	3	2	1	0
Bit/Field	BB7	BB6	BB5	BB4	BB3	BB2	BB1	BB0
R/W	R/W	R/W	R/W	R/W	R/W	R/W	R/W	R/W
Reset	0	0	0	0	0	0	0	0

Note: R = Read W = Write X = Indeterminate ? = Not Applicable

Bit Position	Bit/Field	R/W	Value	Description
7–0	BB7–0	R/W		BBR specifies the base address (on 4KB boundaries) used to generate a 20-bit physical address for Bank Area accesses.

Physical Address Translation

Figure 29 illustrates the way in which physical addresses are generated based on the contents of CBAR, CBR and BBR. MMU comparators classify an access by logical area as defined by CBAR. Depending on which of the three potential logical areas (Common Area 1, Bank Area, or Common Area 0) is being accessed, the appropriate 8- or 7-bit base address is added to the high-order 4 bits of the logical address, yielding a 19- or 20-bit physical address. CBR is associated with Common Area 1 accesses. Common Area 0, if defined, is always based at physical address `00000H`.

MMU and RESET

During RESET, all bits of the CA field of CBAR are set to `1` while all bits of the BA field of CBAR, CBR and BBR are reset to `0`. The logical 64KB address space corresponds directly with the first 64KB `0000H` to `FFFFH`) of the 1024KB `00000H`. to `FFFFFH`) physical address space. Thus, after RESET, the Z8X180 begins execution at logical and physical address 0.

MMU Register Access Timing

When data is written into CBAR, CBR or BBR, the value is effective from the cycle immediately following the I/O write cycle which updates these registers.

During MMU programming insure that CPU program execution is not disrupted. The next cycle following MMU register programming is normally an Op Code fetch from the newly translated address. One technique is to localize all MMU programming routines in a Common Area that is always enabled.

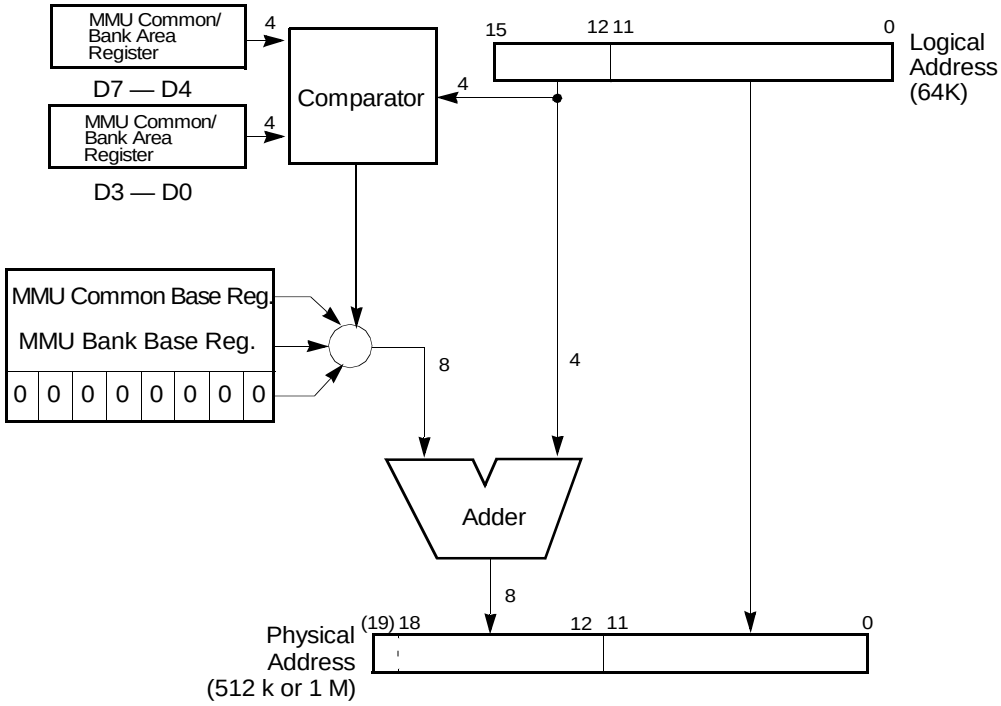

Figure 29. Physical Address Generation

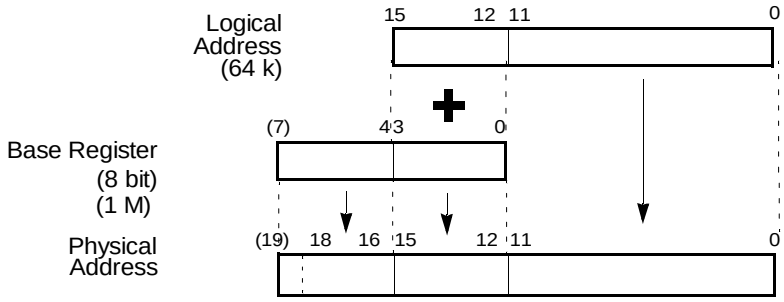

Figure 30. Physical Address Generation 2

Note: Packages not containing an A19 pin or situations using TOUT instead of A18 yield an address capable of only addressing 512K of physical space.

Interrupts

The Z8X180 CPU has twelve interrupt sources, 4 external and 8 internal, with fixed priority. (Reference Figure 31.)

This section explains the CPU registers associated with interrupt processing, the TRAP interrupt, interrupt response modes, and the external interrupts. The detailed discussion of internal interrupt generation (except TRAP) is presented in the appropriate hardware section (that is, PRT, DMAC, ASCI, and CSI/O).

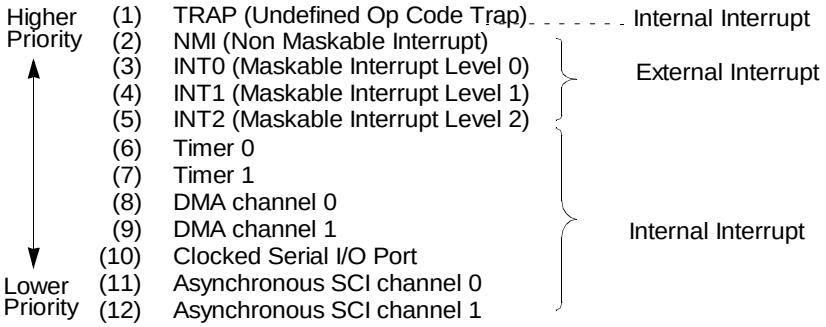

Figure 31. Interrupt Sources

Interrupt Control Registers and Flags. The Z8X180 has three registers and two flags which are associated with interrupt processing.

Function	Name	Access Method
Interrupt Vector High	I	LD A,I and LD I, A instructions
Interrupt Vector Low	IL	I/O instruction (addr = 33H)
Interrupt/Trap Control	ITC	I/O instruction (addr = 34H)
Interrupt Enable Flag 1,2	IEF1, IEF2	El and DI

Interrupt Vector Register (I)

Mode 2 for $\overline{\text{INT0}}$ external interrupt, $\overline{\text{INT1}}$ and $\overline{\text{INT2}}$ external interrupts, and all internal interrupts (except TRAP) use a programmable vectored technique to determine the address at which interrupt processing starts. In response to the interrupt a 16-bit address is generated. This address accesses a vector table in memory to obtain the address at which execution restarts.

While the method for generation of the least significant byte of the table address differs, all vectored interrupts use the contents of I as the most significant byte of the table address. By programming the contents of I, vector tables can be relocated on 256 byte boundaries throughout the 64KB logical address space.

Note: I is read/written with the LD A, I and LD I, A instructions rather than I/O (IN, OUT) instructions. I is initialized to `00H` during RESET.

Interrupt Vector Low Register

This register determines the most significant three bits of the low-order byte of the interrupt vector table address for external interrupts $\overline{\text{INT1}}$ and $\overline{\text{INT2}}$ and all internal interrupts (except TRAP). The five least significant bits are fixed for each specific interrupt source. By programming IL, the

vector table can be relocated on 32 byte boundaries. IL is initialized to `00H` during RESET.

Interrupt Vector Low Register (IL: 33H)

Bit	7	6	5	4	3	2	1	0
Bit/Field	IL7	IL6	IL5	?				
R/W	R/W	R/W	R/W	?				
Reset	00H	00H	00H	?				

Note: R = Read W = Write X = Indeterminate ? = Not Applicable

Bit Position	Bit/Field	R/W	Value	Description
7–5	IL7–5	R/W		The IL register is an internal I/O register which is programmed with the OUT0 instruction and can be read using the IN0 instruction.
4–0	?	N/A		Interrupt source dependent code

INT/TRAP Control Register (ITC)

ITC is used to handle TRAP interrupts and to enable or disable the external maskable interrupt inputs $\overline{\text{INT0}}$, $\overline{\text{INT1}}$ and $\overline{\text{INT2}}$.

INT/TRAP Control Register (ITC: 34H)

Bit	7	6	5	4	3	2	1	0
Bit/Field	TRAP	UFO	?			ITE2	ITE1	ITE0
R/W	R/W	R	N/A			R/W	R/W	R/W
Reset	0	0	0			0	0	1

Note: R = Read W = Write X = Indeterminate ? = Not Applicable

Bit Position	Bit/Field	R/W	Value	Description
7	TRAP	R/W		This bit is set to 1 when an undefined Op Code is fetched. TRAP can be reset under program control by writing it with 0, however, it cannot be written with 1 under program control.
6	UFO	R		**Undefined Fetch Object** (bit 6). When a TRAP interrupt occurs the contents of UFO allow determination of the starting address of the undefined instruction. This action is necessary since the TRAP may occur on either the second or third byte of the Op Code. UFO allows the stacked PC value to be correctly adjusted. If UFO = 0, the first Op Code should be interpreted as the stacked PC-1. If UFO = 1, the first Op Code address is stacked PC-2.
2–0	ITE2–0	R/W		**Interrupt Enable** — ITE2, ITE1 and ITE0 enable and disable the external interrupt inputs $\overline{\text{INT2}}$, $\overline{\text{INT1}}$ and $\overline{\text{INT0}}$, respectively. If reset to 0, the interrupt is masked.

Interrupt Enable Flag 1,2 (IEF1, IEF2)

IEF1 controls the overall enabling and disabling of all internal and external maskable interrupts (that is, all interrupts except $\overline{\text{NMI}}$ and TRAP.

If IEF1 is 0, all maskable interrupts are disabled. IEF1 can be reset to 0 by the DI (Disable Interrupts) instruction and set to 1 by the El (Enable Interrupts) instruction.

The purpose of IEF2 is to correctly manage the occurrence of $\overline{\text{NMI}}$. During $\overline{\text{NMI}}$, the prior interrupt reception state is saved and all maskable interrupts are automatically disabled (IEF1 copied to IEF2 and then IEF1 cleared to 0). At the end of the $\overline{\text{NMI}}$ interrupt service routine, execution of the RETN (Return from Non-maskable Interrupt) automatically restores the interrupt receiving state (by copying IEF2 to IEF1) prior to the occurrence of $\overline{\text{NMI}}$.

Table 8 describes how the IEF2 state can be reflected in the P/V bit of the CPU Status Register by executing LD A, I or LD A, R instructions.

Table 8. State of IEF1 and IEF2

CPU Operation	IEF1	IEF2	REMARKS
RESET	0	0	Inhibits the interrupt except $\overline{\text{NMI}}$ and TRAP.
NMI	0	IEF1	Copies the contents of IEF1 to IEF2
RETN	IEF2	not affected	Returns from the $\overline{\text{NMI}}$ service routine.
Interrupt except $\overline{\text{NMI}}$ end TRAP	0	0	Inhibits the interrupt except $\overline{\text{NMI}}$ end TRAP
RETI	not affected	not affected	
TRAP	not affected	not affected	
EI	1	1	

Table 8. State of IEF1 and IEF2 (Continued)

CPU Operation	IEF1	IEF2	REMARKS
DI	0	0	
LD A, I	not affected	not affected	Transfers the contents of IEF1 to P/V
LID A, R	not affected	not affected	Transfers the contents of IEF1 to P/V

TRAP Interrupt

The Z8X180 generates a non-maskable (not affected by the state of IEF1) TRAP interrupt when an undefined Op Code fetch occurs. This feature can be used to increase software reliability, implement an *extended* instruction set, or both. TRAP may occur during Op Code fetch cycles and also if an undefined Op Code is fetched during the interrupt acknowledge cycle for $\overline{\text{INT0}}$ when Mode 0 is used.

When a TRAP interrupt occurs the Z8X180 operates as follows:

1. The TRAP bit in the Interrupt TRAP/Control (ITC) register is set to `1`.
2. The current PC (Program Counter) value, reflecting location of the undefined Op Code, is saved on the stack.
3. The Z8X180 vectors to logical address 0. Note that if logical address `0000H` is mapped to physical address `00000H`. the vector is the same as for RESET. In this case, testing the TRAP bit in ITC reveals whether the restart at physical address `00000H` was caused by RESET or TRAP.

The state of the UFO (Undefined Fetch Object) bit in ITC allows TRAP manipulation software to correctly *adjust* the stacked PC, depending on whether the second or third byte of the Op Code generated the TRAP. If UFO is `0`, the starting address of the invalid instruction is equal to the

stacked PC-1. If UFO is 1, the starting address of the invalid instruction is equal to the stacked PC-2.

Bus Release cycle, Refresh cycle, DMA cycle, and $\overline{\text{WAIT}}$ cycle cannot be inserted just after TTP state which is inserted for TRAP interrupt sequence. Figure depicts TRAP Timing - 2nd Op Code undefined and Figure illustrates Trap Timing - 3rd Op Code undefined.

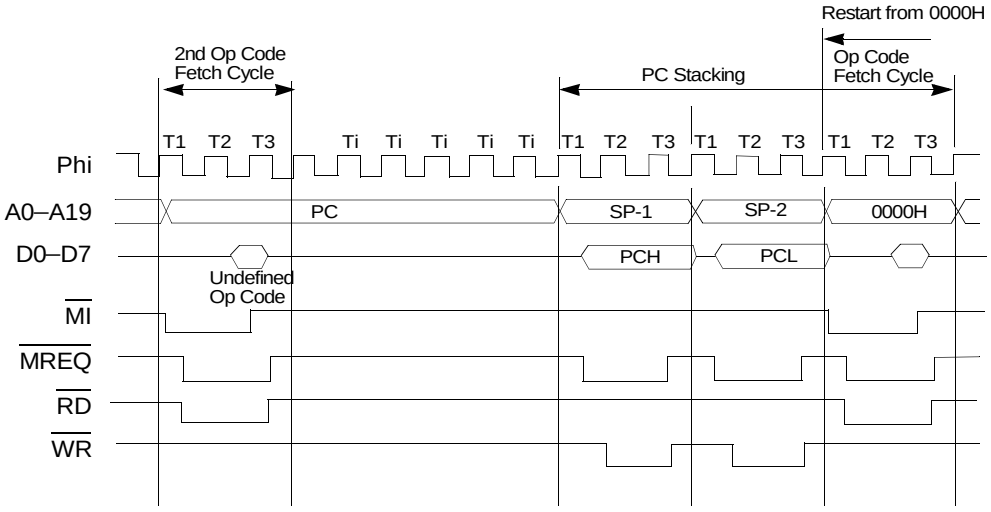

Figure 32. TRAP Timing Diagram -2nd Op Code Undefined

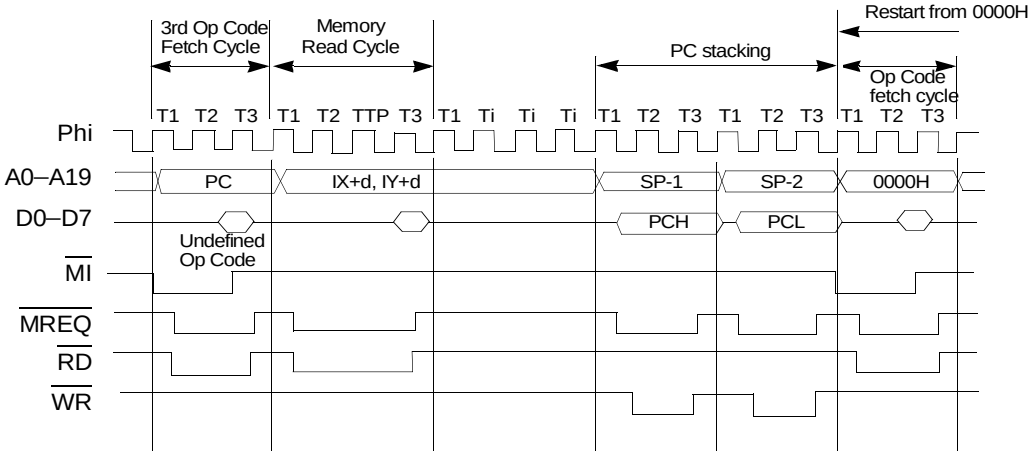

Figure 33. TRAP Timing - 3rd Op Code Undefined

External Interrupts

The Z8X180 features four external hardware interrupt inputs:

- $\overline{\text{NMI}}$–Non-maskable interrupt
- $\overline{\text{INT0}}$–Maskable Interrupt Level 0
- $\overline{\text{INT1}}$–Maskable Interrupt Level 1
- $\overline{\text{INT2}}$–Maskable Interrupt Level 2

$\overline{\text{NMI}}$, $\overline{\text{INT1}}$, and $\overline{\text{INT2}}$ feature fixed interrupt response modes. $\overline{\text{INT0}}$ has 3 different software programmable interrupt response modes—Mode 0, Mode 1 and Mode 2.

$\overline{\text{NMI}}$ - Non-Maskable Interrupt

The **$\overline{\text{NMI}}$** interrupt input is edge-sensitive and cannot be masked by software. When **NMI** is detected, the Z8X180 operates as follows:

1. DMAC operation is suspended by the clearing of the DME (DMA Main Enable) bit in DCNTL.

2. The PC is pushed onto the stack.

3. The contents of IEF1 are copied to IEF2. This saves the interrupt reception state that existed prior to $\overline{\text{NMI}}$.

4. IEF1 is cleared to `0`. This disables all external and internal maskable interrupts (that is, all interrupts except $\overline{\text{NMI}}$ and TRAP).

5. Execution commences at logical address `0066H`.

The last instruction of an $\overline{\text{NMI}}$ service routine must be RETN (Return from Non-maskable Interrupt). This restores the stacked PC, allowing the interrupted program to continue. Furthermore, RETN causes IEF2 to be copied to IEF1, restoring the interrupt reception state that existed prior to $\overline{\text{NMI}}$.

Note: $\overline{\text{NMI}}$, because it can be accepted during Z8X180 on-chip DMAC operation, can be used to externally interrupt DMA transfer. The $\overline{\text{NMI}}$ service routine can reactivate or abort the DMAC operation as required by the application.

For $\overline{\text{NMI}}$, take special care to insure that interrupt inputs do not *overrun* the $\overline{\text{NMI}}$ service routine. Unlimited $\overline{\text{NMI}}$ inputs without a corresponding number of RETN instructions eventually cause stack overflow.

Figure 34 depicts the use of $\overline{\text{NMI}}$ and RETN while Figure 35 details $\overline{\text{NMI}}$ response timing. $\overline{\text{NMI}}$ is edge sensitive and the internally latched $\overline{\text{NMI}}$ falling edge is held until it is sampled. If the falling edge of $\overline{\text{NMI}}$ is latched before the falling edge of the clock state prior to T3 or T1 in the last machine cycle, the internally latched $\overline{\text{NMI}}$ is sampled at the falling edge of the clock state prior to T3 or T1 in the last machine cycle and $\overline{\text{NMI}}$ acknowledge cycle begins at the end of the current machine cycle.

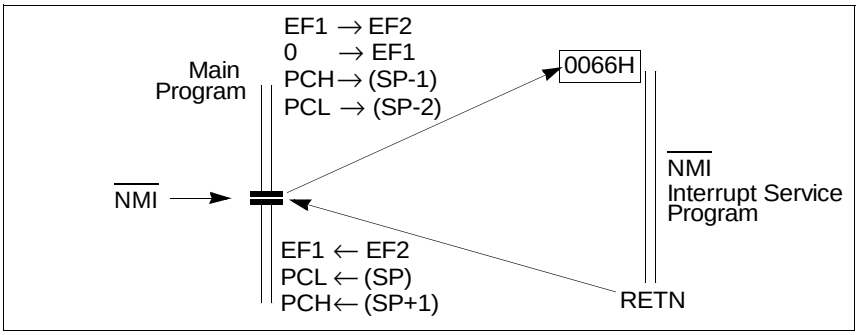

Figure 34. $\overline{\text{NMI}}$ Use

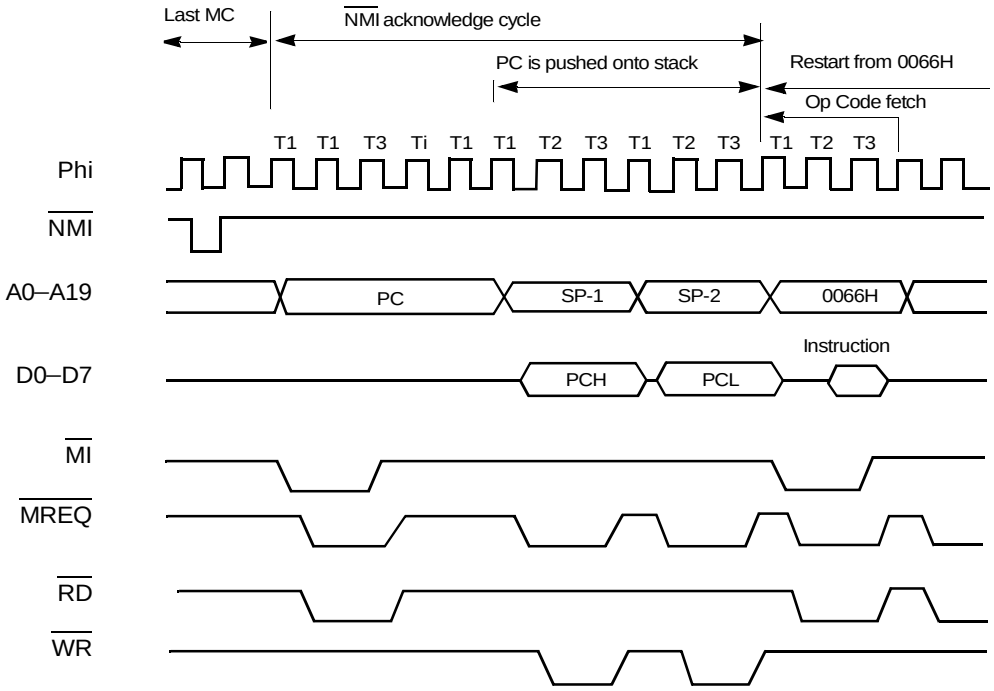

Figure 35. $\overline{\text{NMI}}$ Timing

INT0 - Maskable Interrupt Level 0

The next highest priority external interrupt after $\overline{\text{NMI}}$ is $\overline{\text{INT0}}$. $\overline{\text{INT0}}$ is sampled at the falling edge of the clock state prior to T3 or T1 in the last machine cycle. If $\overline{\text{INT0}}$ is asserted LOW at the falling edge of the clock state prior to T3 or T1 in the last machine cycle, $\overline{\text{INT0}}$ is accepted. The interrupt is masked if either the IEF1 flag or the ITEO (Interrupt Enable 0) bit in ITC are reset to `0`. After $\overline{\text{RESET}}$ the state is as follows:

1. IEF1 is `0`, so $\overline{\text{INT0}}$ is masked
2. ITE0 is `1`, so $\overline{\text{INT0}}$ is enabled by execution of the El (Enable Interrupts) instruction

The $\overline{\text{INT0}}$ interrupt is unique in that 3 programmable interrupt response modes are available - Mode 0, Mode 1 and Mode 2. The specific mode is selected with the IM 0, IM 1 and IM 2 (Set Interrupt Mode) instructions. During $\overline{\text{RESET}}$, the Z8X180 is initialized to use Mode 0 for $\overline{\text{INT0}}$. The 3 interrupt response modes for $\overline{\text{INT0}}$ are:

- Mode 0–Instruction fetch from data bus
- Mode 1–Restart at logical address `0038H`
- Mode 2–Low-byte vector table address fetch from data bus

INT0 Mode 0

During the interrupt acknowledge cycle, an instruction is fetched from the data bus (DO–D7) at the rising edge of T3. Often, this instruction is one of the eight single byte RST (RESTART) instructions which stack the PC and restart execution at a fixed logical address. However, multibyte instructions can be processed if the interrupt acknowledging device can provide a multibyte response. Unlike all other interrupts, the PC is not automatically stacked:

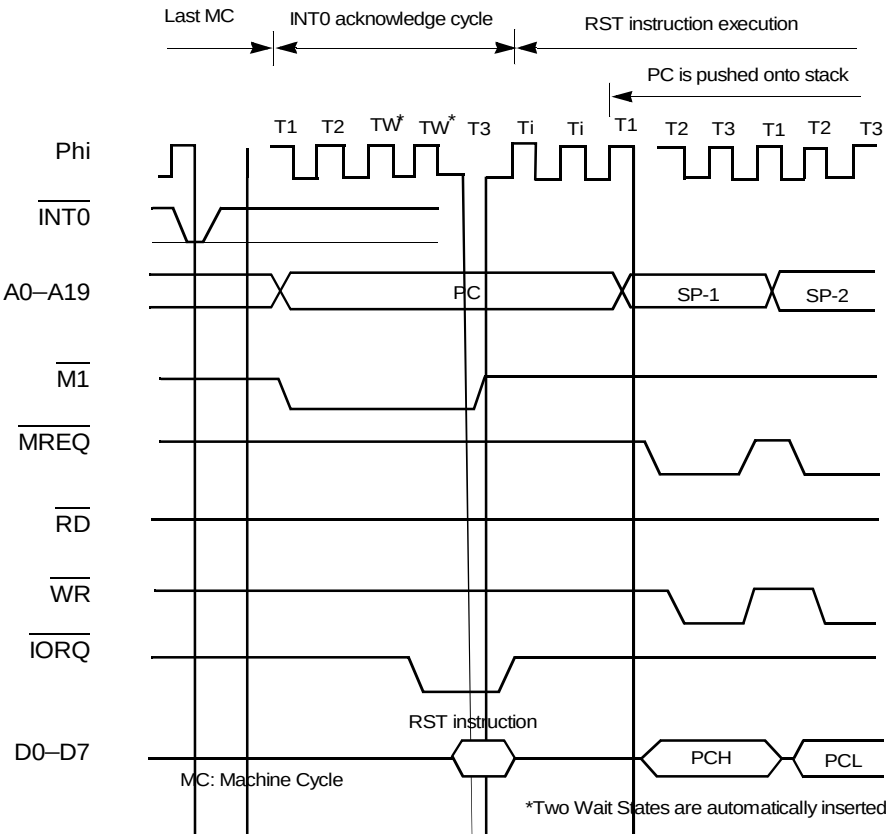

Note: The TRAP interrupt occurs if an invalid instruction is fetched during Mode 0 interrupt acknowledge. (Reference Figure 36.)

Figure 36. $\overline{\text{INT0}}$ Mode 0 Timing Diagram

INT0 Mode 1

When $\overline{\text{INT0}}$ is received, the PC is stacked and instruction execution restarts at logical address `0038H`. Both IEF1 and IEF2 flags are reset to `0`,

disabling all maskable interrupts. The interrupt service routine normally terminates with the EI (Enable Interrupts) instruction followed by the RETI (Return from Interrupt) instruction, to reenable the interrupts. Figure 37 depicts the use of $\overline{\text{INT0}}$ (Mode 1) and RETI for the Mode 1 interrupt sequence.

Figure 37. INT0 Mode 1 Interrupt Sequence

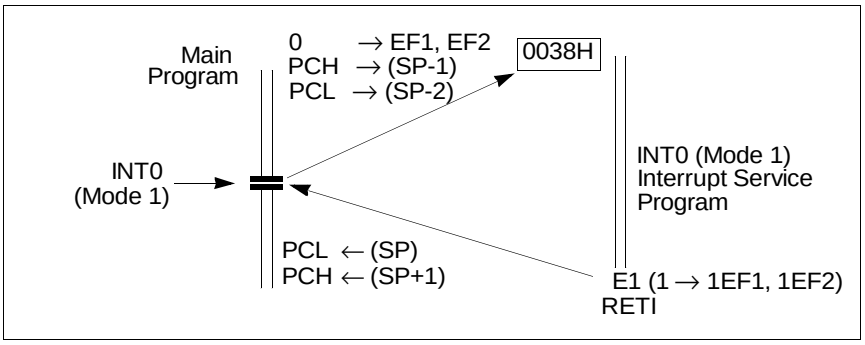

Figure 38 illustrates $\overline{\text{INT0}}$ Mode 1 Timing.

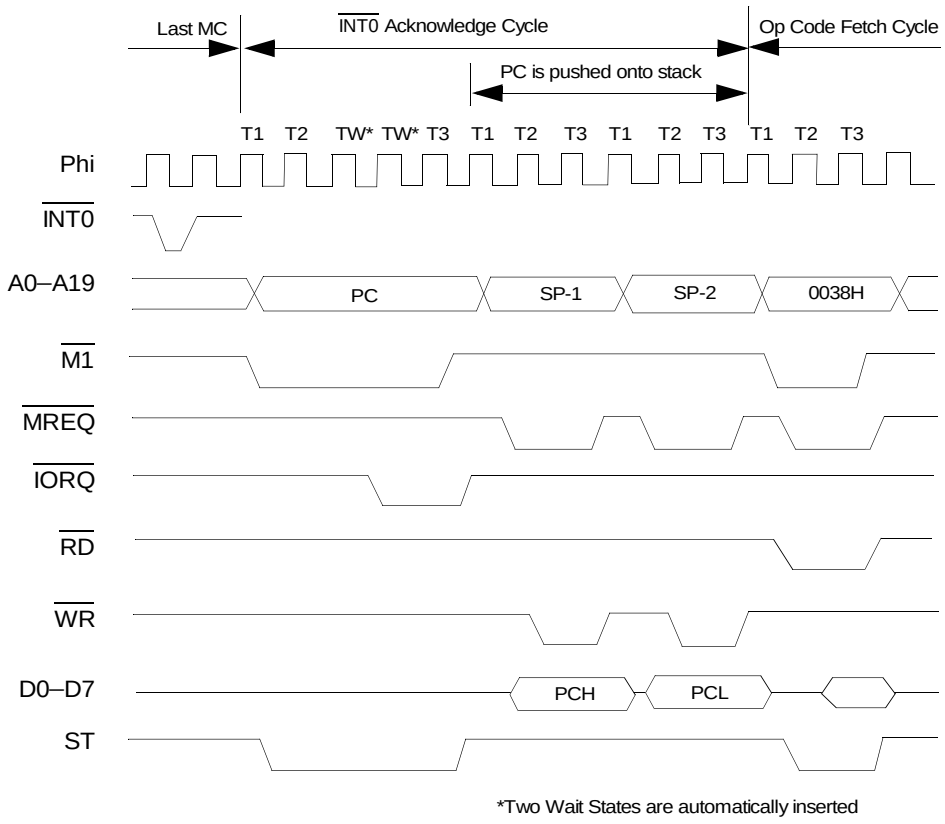

Figure 38. $\overline{\text{INT0}}$ Mode 1 Timing

$\overline{\text{INT0}}$ Mode 2

This method determines the restart address by reading the contents of a table residing in memory. The vector table consists of up to 128 two-byte restart addresses stored in low byte, high byte order.

The vector table address is located on 256 byte boundaries in the 64KB logical address space programmed in the 8-bit Interrupt Vector Register (1). Figure 39 depicts the $\overline{\text{INT0}}$ Mode 2 Vector acquisition.

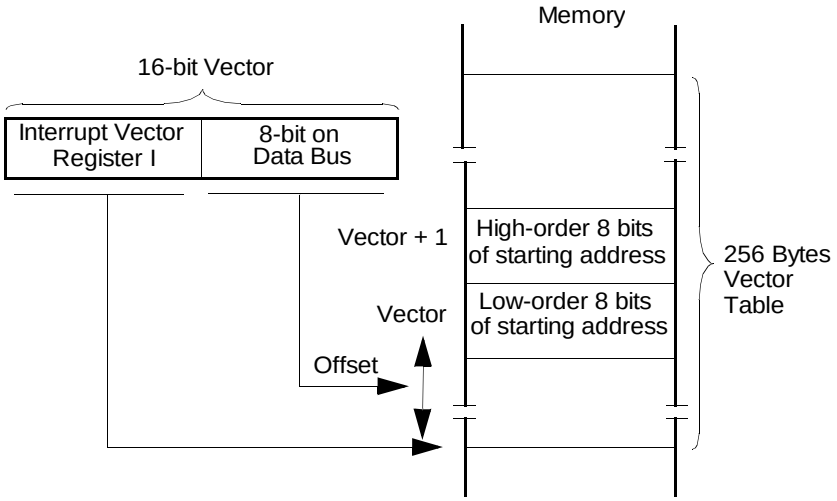

Figure 39. INT0 Mode 2 Vector Acquisition

During the $\overline{\text{INT0}}$ Mode 2 acknowledge cycle, the low-order 8 bits of the vector is fetched from the data bus at the rising edge of T3 and the CPU acquires the 16-bit vector.

Next, the PC is stacked. Finally, the 16-bit restart address is fetched from the vector table and execution begins at that address.

Note: External vector acquisition is indicated by both $\overline{\text{MI}}$ and $\overline{\text{IORQ}}$ LOW. Two Wait States (TW) are automatically inserted for external vector fetch cycles.

During RESET the Interrupt Vector Register (I) is initialized to `00H` and, if necessary, should be set to a different value prior to the occurrence of a Mode 2 $\overline{\text{INT0}}$ interrupt. Figure illustrates $\overline{\text{INT0}}$ interrupt Mode 2 Timing.

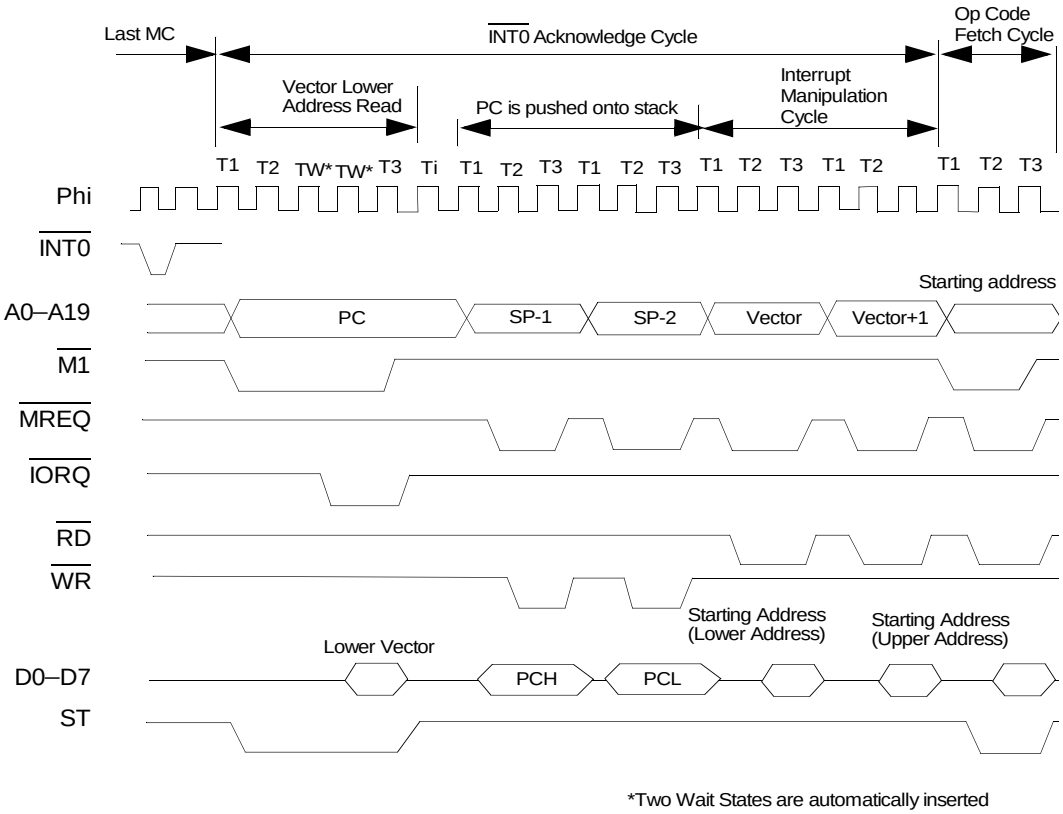

Figure 40. $\overline{\text{INT0}}$ Interrupt Mode 2 Timing Diagram

$\overline{\text{INT1}}$, $\overline{\text{INT2}}$

The operation of external interrupts $\overline{\text{INT1}}$ and $\overline{\text{INT2}}$ is a vector mode similar to $\overline{\text{INT0}}$ Mode 2. The difference is that $\overline{\text{INT1}}$ and $\overline{\text{INT2}}$ generate the low-order byte of vector table address using the IL (Interrupt Vector Low) register rather than fetching it from the data bus. This difference is

also the interrupt response sequence used for all internal interrupts (except TRAP).

As depicted in Figure 41, the low-order byte of the vector table address has the most significant three bits of the software programmable IL register while the least significant five bits are a unique fixed value for each interrupt ($\overline{\text{INT1}}$, $\overline{\text{INT2}}$ and internal) source:

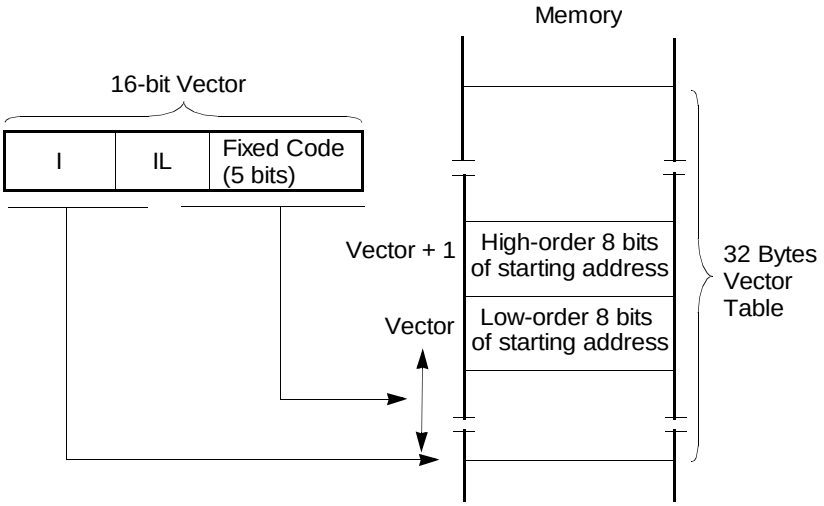

Figure 41. $\overline{\text{INT1}}$, $\overline{\text{INT2}}$ Vector Acquisition

$\overline{\text{INT1}}$ and $\overline{\text{INT2}}$ are globally masked by IEF1 is `0`. Each is also individually maskable by respectively clearing the ITE1 and ITE2 (bits 1,2) of the INT/TRAP control register to `0`.

During RESET, IEF1, ITE1 and ITE2 bits are reset to `0`.

Internal Interrupts

Internal interrupts (except TRAP) use the same vectored response mode as $\overline{\text{INT1}}$ and $\overline{\text{INT2}}$. Internal interrupts are globally masked by IEF1 is `0`. Individual internal interrupts are enabled/disabled by programming each

individual I/O (PRT, DMAC, CSI/O, ASCI) control register. The lower vector of $\overline{INT1}$ $\overline{INT2}$ and internal interrupt are summarized in Table 9.

Table 9. Vector Table

Interrupt Source	Priority	IL			Fixed Code				
		b7	b6	b5	b4	b3	b2	b1	b0
$\overline{INT1}$	Highest	—	—	—	0	0	0	0	0
$\overline{INT2}$	↑	—	—	—	0	0	0	1	0
PRT channel 0		—	—	—	0	0	1	0	0
PRT channel 1		—	—	—	0	0	1	1	0
DMA channel 0		—	—	—	0	1	0	0	0
DMA channel 1		—	—	—	0	1	0	1	0
CSI/O	↓	—	—	—	0	1	1	0	0
ASCI channel 0	Lowest	—	—	—	0	1	1	1	0
ASCI channel 1		—	—	—	1	0	0	0	0

Interrupt Acknowledge Cycle Timings

Figure 43 illustrates $\overline{INT1}$, $\overline{INT2}$, and internal interrupts timing. $\overline{INT1}$ and $\overline{INT2}$ are sampled at the falling edge of the clock state prior to T2 or T1 in the last machine cycle. If $\overline{INT1}$ or $\overline{INT2}$ is asserted Low at the falling edge of clock state prior to T3 or T1 in the last machine cycle, the interrupt request is accepted.

Interrupt Sources During RESET

Interrupt Vector Register (I)

All bits are reset to 0. Because I = 0 locates the vector tables starting at logical address 0000H vectored interrupts ($\overline{\text{INT0}}$ Mode 2, $\overline{\text{INT1}}$, $\overline{\text{INT2}}$, and internal interrupts) overlap with fixed restart interrupts like RESET (0), $\overline{\text{NMI}}$ (0066H), $\overline{\text{INT0}}$ Mode 1 (0038H) and RST (0000H-0038H). The vector table(s) are built elsewhere in memory and located on 256 byte boundaries by reprogramming I with the LD I, A instruction.

IL Register

Bits 7 - 5 are reset to 0

The IL Register can be programmed to locate the vector table for $\overline{\text{INT1}}$, $\overline{\text{INT2}}$ and internal interrupts on 32-byte subboundaries within the 256 byte area specified by I.

IEF1, IEF2 Flags

Reset to 0. Interrupts other than $\overline{\text{NMI}}$ and TRAP are disabled.

ITC Register

ITE0 set to 1. ITE1, ITE2 reset to 0. $\overline{\text{INT0}}$ can be enabled by the EI instruction, which sets IEF1 to 1. Enabling $\overline{\text{INT1}}$ and $\overline{\text{INT2}}$ also requires that the ITE1 and ITE2 bits be respectively set to 1 by writing to ITC.

I/O Control Registers

Interrupt enable bits reset to 0. All Z8X180 on-chip I/O (PRT, DMAC, CSI/O, ASCI) interrupts are disabled and can be individually enabled by writing to each I/O control register interrupt enable bit.

Return from Subroutine (RETI) Instruction Sequence

When the EDH/4DH sequence is fetched by the Z8X180, it is recognized as the RETI instruction sequence. The Z8X180 then refetches the RETI instruction with four T-states in the EDH cycle allowing the Z80 peripherals time to decode that cycle (See Figure 42). This procedure allows the internal interrupt structure of the peripheral to properly decode the instruction and behave accordingly.

The M1E bit of the Operation Mode Control Register (OMCR) must be set to 0 so that $\overline{M1}$ signal is active only during the refetch of the RETI instruction sequence. This condition is the desired operation when Z80 peripherals are connected to the Z8018X.

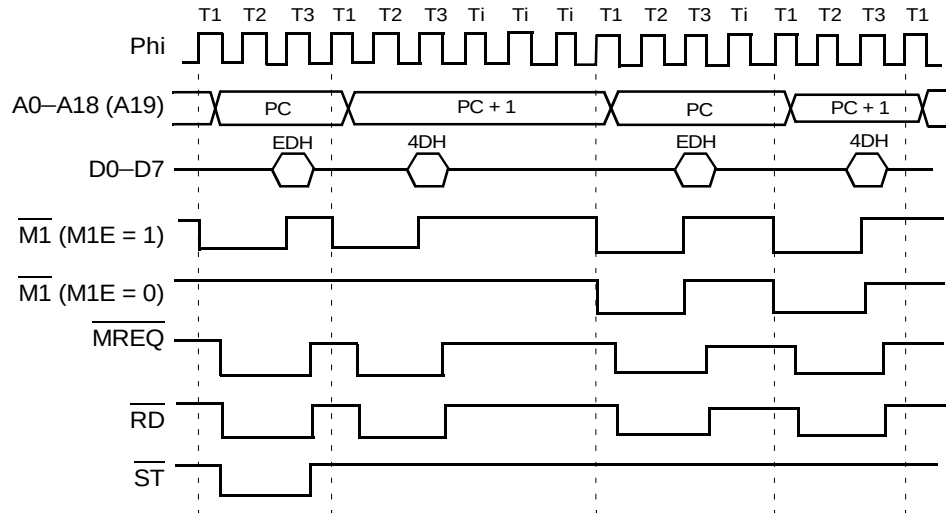

Note: RETI machine cycles 9 and 10 not shown.

Figure 42. RETI Instruction Sequence

The RETI instruction takes 22 T-states and 10 machine cycles. Table 10 lists the conditions of all the control signals during this sequence for the

Z8X180. Figure 43 illustrates the INT1, INT2 and internal interrupts timing.

Table 10. RETI Control Signal States

Machine Cycle	States	Address	Data	$\overline{MI}$							
				$\overline{RD}$	$\overline{WR}$	$\overline{MREQ}$	$\overline{IORQ}$	$\overline{M1E=1}$	$\overline{M1E=0}$	$\overline{HALT}$	ST
1	T1-T3	1st Op Code	EDH	0	1	0	1	0	1	1	0
2	TI-T3	2nd Op Code	4DH	0	1	0	1	0	1	1	1
3	T1	Don't Care	3-state	1	1	1	1	1	1	1	1
4	T1	Don't Care	3-state	1	1	1	1	1	1	1	1
5	T1	Don't Care	3-state	1	1	1	1	1	1	1	1
6	T1-T3	1st Op Code	EDH	0	1	0	1	0	0	1	1
7	T1	Don't Care	3-state	1	1	1	1	1	1	1	1
8	T1-T3	2nd Op Code	4DH	0	1	0	1	0	1	1	1
9	T1-T3	SP	data	0	1	0	1	1	1	1	1
10	T1-T3	SP+1	data	0	1	0	1	1	1	1	1

IOC affects the IORQ/RD signals. M1E affects the assertion of M1. One state also reflects a 1 while the other reflects a 0

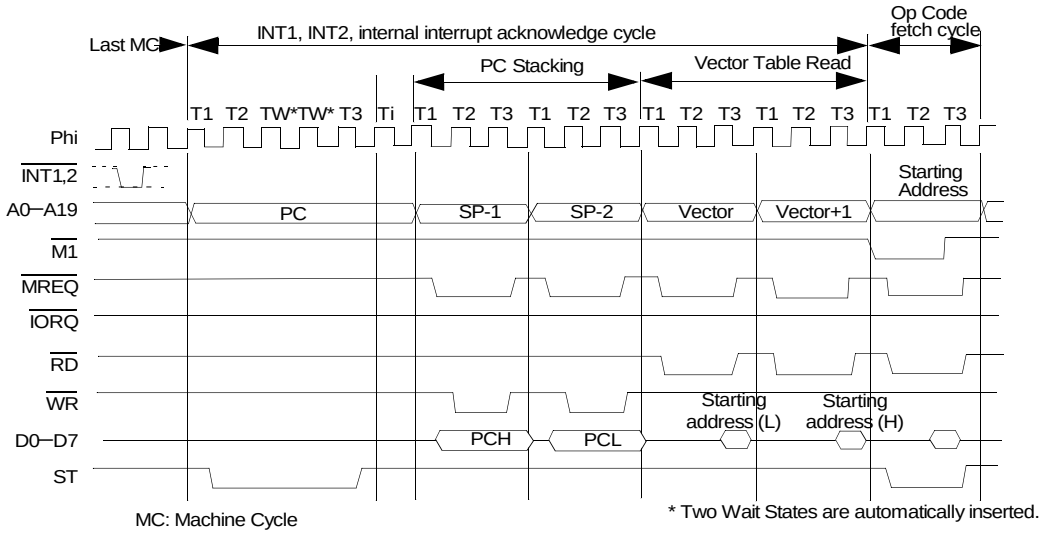

Figure 43. INT1, INT2 and Internal Interrupts Timing Diagram

Dynamic RAM Refresh Control

The Z8X180 incorporates a dynamic RAM refresh control circuit including 8-bit refresh address generation and programmable refresh timing. This circuit generates asynchronous refresh cycles inserted at the programmable interval independent of CPU program execution. For systems which do not use dynamic RAM, the refresh function can be disabled.

When the internal refresh controller determines that a refresh cycle should occur, the current instruction is interrupted at the first breakpoint between machine cycles. The refresh cycle is inserted by placing the refresh address on A0–A7 and the $\overline{\text{RFSH}}$ output is driven Low.

Refresh cycles may be programmed to be either two or three clock cycles in duration by programming the REFW (Refresh Wait) bit in the Refresh Control Register (RCR). The external $\overline{\text{WAIT}}$ input and the internal Wait State generator are not effective during refresh.

Figure 44 depicts the timing of a refresh cycle with a refresh wait (TRW) cycle.

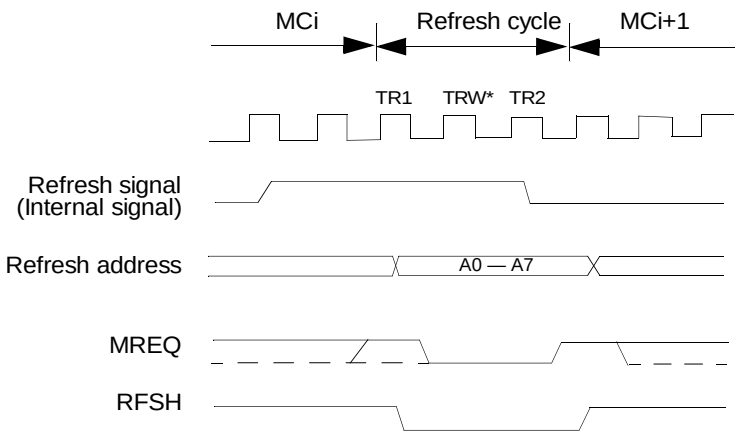

NOTE: * If three refresh cycles are specified, TRW is inserted. Otherwise, TRW is not inserted

MC: Machine Cycle

Figure 44. Refresh Cycle Timing Diagram

Refresh Control Register (RCR)

The RCR specifies the interval and length of refresh cycles, while enabling or disabling the refresh function.

Refresh Control Register (RCR: 36H)

Bit	7	6	5	4	3	2	1	0
Bit/Field	REFE	REFW	?				CYC1	CYC0
R/W	R/W	R/W	?				R/W	R/W
Reset	1	1	?				0	0

Note: R = Read W = Write X = Indeterminate ? = Not Applicable

Bit Position	Bit/Field	R/W	Value	Description
7	REFE	R/W		**REFE: Refresh Enable**
			0	Disables the refresh controller
			1	Enables refresh cycle insertion.
6	REFW	R/W		**Refresh Wait** (bit 6)
			0	Causes the refresh cycle to be two clocks in duration.
			1	Causes the refresh cycle to be three clocks in duration by adding a refresh wait cycle (TRW).
1–0	CYC1–0	R/W		**Cycle Interval** — CYC1 and CYC0 specify the interval (in clock cycles) between refresh cycles. In the case of dynamic RAMs requiring 128 refresh cycles every 2 ms (or 256 cycles in every 4 ms), the required refresh interval is less than or equal to 15.625 µs. Thus, the underlined values indicate the best refresh interval depending on CPU clock frequency. CYC0 and CYC1 are cleared to 0 during RESET. Refer to Table 11.

Table 11. DRAM Refresh Intervals

CYC1	CYC0	Insertion Interval	Time Interval				
			10 MHz	8 MHz	6 MHz	4 MHz	2.5 MHz
0	0	10 states	(1.0 µs)*	(1.25 µs)*	1.66 µs	2.5 µs	4.0 µs
0	1	20 states	(2.0 µs)*	(2.5 µs)*	3.3 µs	5.0 µs	8.0 µs
1	0	40 states	(4.0 µs)*	(5.0 µs)*	6.8 µs	10.0 µs	16.0 µs
1	1	80 states	(8.0 µs)*	(10.0 µs)*	13.3 µs	20.0 µs	32.0 µs

* Calculated interval

Refresh Control And RESET

After RESET, based on the initialized value of RCR, refresh cycles occur with an interval of ten clock cycles and are three clock cycles in duration.

Dynamic Ram Refresh Operation Notes

1. Refresh Cycle insertion is stopped when the CPU is in the following states:
   - During RESET
   - When the bus is released in response to $\overline{\text{BUSREQ}}$
   - During SLEEP mode
   - During Wait States
2. Refresh cycles are suppressed when the bus is released in response to $\overline{\text{BUSREQ}}$. However, the refresh timer continues to operate. Thus, the time at which the first refresh cycle occurs after the Z8X180 re-acquires the bus depends on the refresh timer and has no timing relationship with the bus exchange.

3. Refresh cycles are suppressed during SLEEP mode. If a refresh cycle is requested during SLEEP mode, the refresh cycle request is internally *latched* (until replaced with the next refresh request). The latched refresh cycle is inserted at the end of the first machine cycle after SLEEP mode is exited. After this initial cycle, the time at which the next refresh cycle occurs depends on the refresh time and has no timing relationship with the exit from SLEEP mode.
4. Regarding (2) and (3), the refresh address is incremented by one for each successful refresh cycle, not for each refresh request. Thus, independent of the number of *missed* refresh requests, each refresh bus cycle uses a refresh address incremented by one from that of the previous refresh bus cycles.

DMA Controller (DMAC)

The Z8X180 contains a two-channel DMA (Direct Memory Access) controller which supports high speed data transfer. Both channels (channel 0 and channel 1) feature the following capabilities:

- Memory Address Space

  Memory source and destination addresses can be directly specified anywhere within the 1024KB physical address space using 20-bit source and destination memory addresses. In addition, memory transfers can arbitrarily cross 64KB physical address boundaries without CPU intervention.

- I/O Address Space

  I/O source and destination addresses can be directly specified anywhere within the 64KB I/O address space (16-bit source and destination I/O addresses).

- Transfer Length

  Up to 64KB are transferred based on a 16- bit byte count register.

- $\overline{\text{DREQ}}$ Input

  Level- and edge-sense DREQ input detection are selectable.

  $\overline{\text{TEND}}$ Output Used to indicate DMA completion to external devices.

- Transfer Rate

  Each byte transfer occurs every 6 clock cycles. Wait States can be inserted in DMA cycles for slow memory or I/O devices. At the system clock (ϕ) = 6 MHz, the DMA transfer rate is as high as 1.0 megabytes/second (no Wait States).

There is an additional feature disc for DMA interrupt request by DMA END. Each channel has the following additional specific capabilities:

Channel 0

- Memory to memory
- Memory to I/O
- Memory to memory mapped I/O transfers.
- Memory address increment, decrement, no-change
- Burst or cycle steal memory to/from memory transfers
- DMA to/from both ASCI channels
- Higher priority than DMAC channel 1

Channel 1

- Memory to/from I/O transfer
- Memory address increment, decrement

DMAC Registers

Each channel of the DMAC (channel 0, 1) contains three registers specifically associated with that channel.

Channel 0

- SAR0–Source Address Register
- DAR0–Destination Address Register
- BCR0–Byte Count Register

Channel 1

- MAR1–Memory Address Register
- IAR1–I/O Address Register
- BCR1–Byte Count Register

The two channels share the following three additional registers in common:

- DSTAT–DMA Status Register
- DMODE–DMA Mode Register
- DCNTL–DMA Control Register

DMAC Block Diagram

Figure 45 depicts the Z8X180 DMAC Block Diagram.

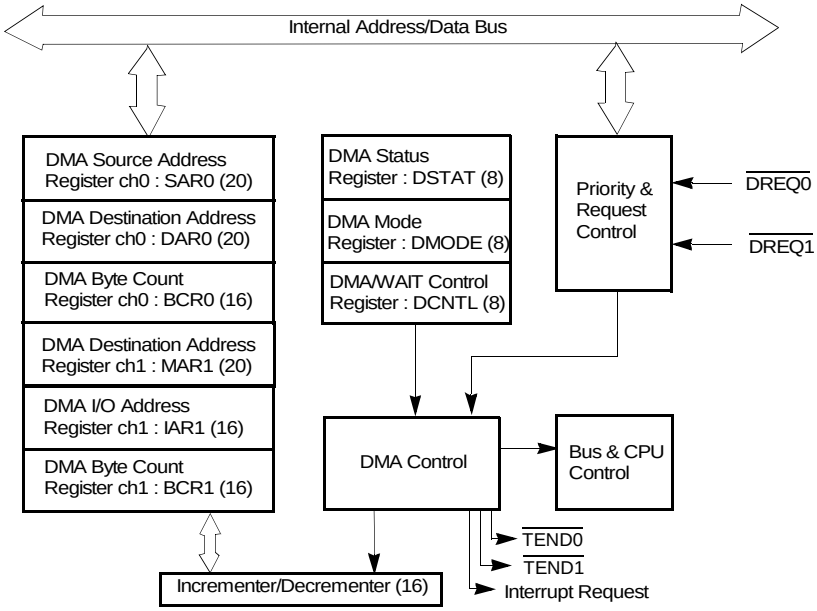

Figure 45. DMAC Block Diagram

DMAC Register Description

DMA Source Address Register Channel 0 (SAR0 I/O Address = 20H to 22H)

Specifies the physical source address for channel 0 transfers. The register contains 20 bits and can specify up to 1024KB memory addresses or up to 64KB I/O addresses. Channel 0 source can be memory, I/O, or memory mapped I/O.

DMA Destination Address Register Channel 0 (DAR0 I/O Address = 23H to 25H)

Specifies the physical destination address for channel 0 transfers. The register contains 20 bits and can specify up to 1024KB memory addresses or up to 64KB I/O addresses. Channel 0 destination can be memory, I/O, or memory mapped I/O.

DMA Byte Count Register Channel 0 (BCR0 I/O Address = 26H to 27H)

Specifies the number of bytes to be transferred. This register contains 16 bits and may specify up to 64KB transfers. When one byte is transferred, the register is decremented by one. If *n* bytes are transferred, *n* is stored before the DMA operation.

DMA Memory Address Register Channel 1 (MAR1: I/O Address = 28H to 2AH)

Specifies the physical memory address for channel 1 transfers. This address may be a destination or source memory address. The register contains 20 bits and may specify up to 1024KB memory address.

DMA I/O Address Register Channel 1 (IAR1: I/O Address = 2BH to 2CH)

Specifies the I/O address for channel 1 transfers. This address may be a destination or source I/O address. The register contains 16 bits and may specify up to 64KB I/O addresses.

DMA Byte Count Register Channel 1 (BCR1: I/O Address = 2EH to 2FH)

Specifies the number of bytes to be transferred. This register contains 16 bits and may specify up to 64KB transfers. When one byte is transferred, the register is decremented by one.

DMA Status Register (DSTAT)

DSTAT is used to enable and disable DMA transfer and DMA termination interrupts. DSTAT also determines DMA transfer status, that is, completed or in progress.

DMA Status Register (DSTAT: 30H)

Bit	7	6	5	4	3	2	1	0
Bit/Field	DE1	DE0	$\overline{\text{DWE1}}$	$\overline{\text{DWE0}}$	DIE1	DIE0	?	DME
R/W	R/W	R/W	W	W	R/W	R/W	?	R
Reset	0	0	1	1	0	0	?	

Note: R = Read W = Write X = Indeterminate ? = Not Applicable

Bit Position	Bit/Field	R/W	Value	Description
7	DE1	R/W		**Enable Channel 1** — When DE1 = 1 and DME = 1, channel 1 DMA is enabled. When a DMA transfer terminates (BCR1 = 0), DE1 is reset to 0 by the DMAC. When DE1 = 0 and the DMA interrupt is enabled (DIE1 = 1), a DMA interrupt request is made to the CPU. To perform a software write to DE1, DWE1 is written with 0 during the same register write access. Writing DE1 to 0 disables channel 1 DMA, but DMA is restartable. Writing DE1 to 1 enables channel 1 DMA and automatically sets DME (DMA Main Enable) to 1. DE1 is cleared to 0 during RESET.

Bit Position	Bit/Field	R/W	Value	Description
6	DE0	R/W		**Enable Channel 0** — When DE0 = 1 and DME = 1, channel 0 DMA is enabled. When a DMA transfer terminates BCR0 = 0), DE0: is reset to 0 by the DMAC. When DE0 = 0 and the DMA interrupt is enabled (DIE0 = 1), a DMA interrupt request is made to the CPU. To perform a software write to DE0, DWE0 must be written with 0 during the same register write access. Writing DE0 to 0 disables channel 0 DMA. Writing DE0 to 1 enables channel 0 DMA and automatically sets DME (DMA Main Enable) to 1. DE0 is cleared to 0 during RESET.
5	$\overline{\text{DWE1}}$	W		**Bit Write Enable 1** — When performing any software write to DEI, $\overline{\text{DWE1}}$ must be written with 0 during the same access. $\overline{\text{DWE1}}$ write value of 0 is not held and DWE1 is always read as 1.
4	$\overline{\text{DWE0}}$	W		**Bit Write Enable 0** — When performing any software write to DE0, $\overline{\text{DWE0}}$ must be written with 0 during the same access. $\overline{\text{DWE0}}$ write value of 0 is not held and DWE0 is always read as 1.
3	DIE1	R/W		**DMA Interrupt Enable Channel 1** — When DIE1 is set to 1, the termination channel 1 DMA transfer (indicated when DE1 is 0) causes a CPU interrupt request to be generated. When DIE1 is 0, the channel 1 DMA termination interrupt is disabled. DIE1 is cleared to 0 during RESET.
2	DIE0			**DMA Interrupt Enable Channel 0** — When DIE0 is set to 1, the termination channel 0 of DMA transfer (indicated when DE0 is 0) causes a CPU interrupt request to be generated. When DIE0 is 0, the channel 0 DMA termination interrupt is disabled. DIE0 is cleared to 0 during RESET.

Bit Position	Bit/Field	R/W	Value	Description
0	DME	R		**DMA Main Enable** — A DMA operation is only enabled when its DE bit DE0 for channel 0, DE1 for channel 1) and the DME bit are set to 1. When NMI occurs, DME is reset to 0, thus disabling DMA activity during the NMI interrupt service routine. To restart DMA, DE0 and/or DE1 must be written with 1 (even if the contents are already 1). This action automatically sets DME to 1, allowing DMA operations to continue. DME cannot be directly written. It is cleared to 0 by NMI or indirectly set to 1 by setting DE0 and/or DE1 to 1.DME is cleared to 0 during RESET.

DMA Mode Register (DMODE)

DMODE is used to set the addressing and transfer mode for channel 0.

DMA Mode Register (DMODE: 31H)

Bit	7	6	5	4	3	2	1	0
Bit/Field	?		DM1	DM0	SM1	SM0	MMOD	?
R/W	?		R/W	R/W	R/W	R/W	R/W	?
Reset	?		0	0	0	0	0	?

Note: R = Read W = Write X = Indeterminate ? = Not Applicable

Bit Position	Bit/Field	R/W	Value	Description
5–4	DM1:0	R/W		**Destination Mode Channel 0** — Specifies whether the destination for channel 0 transfers is memory, I/O or memory mapped I/O and the corresponding address modifier. Reference Table 12.

Bit Position	Bit/Field	R/W	Value	Description
3–2	SM1:0	W		**Source Mode Channel** — Specifies whether the source for channel 0 transfers is memory, I/O, or memory mapped I/O and the corresponding address modifier. Reference Table 13.
1	MMOD	R/W		**DMA Memory Mode Channel 0** — When channel 0 is configured for memory to/from memory transfers, the external $\overline{\text{DREQ}}$0 input is not used to control the transfer timing. Instead, two automatic transfer timing modes are selectable - BURST (MMOD is 1) and CYCLE STEAL (MMOD is 0). For BURST memory to/from memory transfers, the DMAC takes control of the bus continuously until the DMA transfer completes (as shown by the byte count register is 0). In CYCLE STEAL mode, the CPU is given a cycle for each DMA byte transfer cycle until the transfer is completed. For channel 0 DMA with I/O source or destination, the $\overline{\text{DREQ}}$0 input times the transfer and thus MMOD is ignored.

Table 12. Channel 0 Destination

DM1	DM0	Memory/I/O	Address Increment/Decrement
0	0	Memory	+ 1
0	1	Memory	-1
1	0	Memory	fixed
1	1	I/O	fixed

Table 13. Channel 0 Source

SM1	SM0	Memory/I/O	Address lncrement/Decrement
0	0	Memory	+ 1
0	1	Memory	-1
1	0	Memory	fixed
1	1	I/O	fixed

Table 14 describes all DMA TRANSFER mode combinations of DM0 DM1, SM0 SM1. Because I/O to/from I/O transfers are not implemented, 12 combinations are available.

Table 14. Transfer Mode Combinations

DM1	DM0	SM1	SM0	Transfer Mode	Increment/Decrement
0	0	0	0	Memory to Memory	SAR0+1, DAR0+1
0	0	0	1	Memory to Memory	SAR0-1, DAR0+1
0	0	1	0	Memory* to Memory	SAR0 fixed, DAR0+ 1
0	0	1	1	I/O to Memory	SAR0 fixed DAR0+1
0	1	0	0	Memory to Memory	SAR0+1, DAR0-1
0	1	0	1	Memory to Memory	SAR0-1,DAR0-1
0	1	1	0	Memory to Memory	SAR0 fixed, DAR0-1
0	1	1	1	I/O to Memory	SAR0 fixed. DAR0-1
1	0	0	0	Memory to Memory*	SAR0+ 1, DAR0 fixed
1	0	0	1	Memory to Memory*	SAR0-1, DAR0 fixed
1	0	1	0	Reserved	
1	0	1	1	Reserved	

Table 14. Transfer Mode Combinations

DM1	DM0	SM1	SM0	Transfer Mode	Increment/Decrement
1	1	0	0	Memory to I/O	SAR0+1, DAR0 fixed
1	1	0	1	Memory to I/O	SAR0-1, DAR0 fixed
1	1	1	0	Reserved	
1	1	1	1	Reserved	
Note: *: includes memory mapped I/O.					

DMA/WAIT Control Register (DCNTL)

DCNTL controls the insertion of Wait States into DMAC (and CPU) accesses of memory or I/O Also, the DMA request mode for each DREQ DREQ0 and DREQ1) input is defined as level or edge sense. DCNTL also sets the DMA transfer mode for channel 1, which is limited to memory to/from I/O transfers.

DMA/WAIT Control Register (DCNTL: 32H)

Bit	7	6	5	4	3	2	1	0
Bit/Field	MWI1	MWI0	IWI1	IWI0	DMS1	DMS0	DIM1	DIM0
R/W	R/W	R/W	R/W	R/W	R/W	R/W	R/W	R/W
Reset	0	0	0	0	0	0	0	0

Note: R = Read W = Write X = Indeterminate ? = Not Applicable

Bit Position	Bit/Field	R/W	Value	Description
7–6	MWI1–0	R/W		**Memory Wait Insertion** —Specifies the number of wait states introduced into CPU or DMAC memory access cycles. MWI1 and MWI0 are set to 1 during RESET. See section on Wait State Generator for details.
5–4	IWI1–0	R/W		**Wait Insertion** — Specifies the number of Wait States introduced into CPU or DMAC I/O access cycles. IWI1 and IWI0 are set to 1 during RESET. See section on Wait State Generator for details.
3–2	DMS1–0	R/W		**DMA Request Sense** — Specifies the DMA request sense for channel 0 ($\overline{\text{DREQ0}}$) and channel 1 ($\overline{\text{DREQ1}}$) respectively. When reset to 0, the input is level-sense. When set to 1, the input is edge-sense.
1–0	DIM1–0	R/W		**DMA Channel 1 I/O and Memory Mode** — Specifies the source/destination and address modifier for channel 1 memory to/from I/O transfer modes. Reference Table 15.

Table 15. Channel 1 Transfer Mode

DIM1	DIM0	Transfer Mode	Address Increment/Decrement
0	0	Memory to I/O	MARI +1, IAR1 fixed
0	1	Memory to I/O	MARI -1, IAR1 fixed
1	0	I/O to Memory	IAR1 fixed, MAR1+1
1	1	I/O to Memory	IAR1 fixed, MAR1-1

DMA I/O Address Register Ch. 1 (IAR1B: 2DH) (Z8S180/L180-Class Processor Only)

Bit	7	6	5	4	3	2	1	0
Bit/Field			Reserved					
R/W	R/W	R/W	R/W		R/W	R/W		
Reset	0	0	0		0	0		

Note: R = Read W = Write X = Indeterminate ? = Not Applicable

Bit Position	Bit/Field	R/W	Value	Description
7		R/W		Alternating Channels
			0	DMA Channels are independent
			1	Toggle between DMA channels for same device
6		R/W		Currently selected DMA channel when Bit 7 = 1
5–4	Reserved	R/W	0	Reserved. Must be 0.
3		R/W	0	TOUT/$\overline{\text{DREQ}}$ is DREQ In
			1	TOUT/$\overline{\text{DREQ}}$ is TOUT Out

Bit Position	Bit/Field	R/W	Value	Description
2-0		R/W	000	DMA1 ext TOUT/DREQ
			001	DMA1 ASCI0
			010	DMA1 ASCI1
			011	DMA1 ESCC
			111	DMA1 PIA27-20 (P1284)

DMA Register Description

Bit 7

This bit must be set to 1 only when both DMA channels are set to take their requests from the same device. If this bit is 1 (it resets to 0), the TEND output of DMA channel o sets a flip-flop, so that thereafter the device's request is visible to channel 1, but not visible to channel 0. The internal TEND signal of channel 1 clears the FF, so that thereafter, the device's request is visible to channel 0, but no visible to channel 1.

If DMA request are from differing sources, DMA channel 0 request is forced onto DMA channel 1 after TEND output of DMA channel 0 sets the flop-flop to alternate.

Bit 6

When both DMA channels are programmed to take their requests from the same device, this bit (FF mentioned in the previous paragraph) controls which channel the device's request is presented to: 0 = DMA0, 1 = DMA l. When Bit 7 is 1, this bit is automatically toggled by the channel end output of the channels.

Bits 5–3

Reserved. Must be 0.

Bits 2–0

With DIM1, bit 1 of DCNTL, these bits control which request is presented to DMA channel 1, as described below:

DIM1	IAR18–16	Request Routed to DMA Channel 1
0	000	$\overline{\text{DREQ1}}$
0	001	ASCI0 Tx
0	010	ASCI1 Tx
0	011	ext CKA0/$\overline{\text{DREQ0}}$
0	10X	Reserved
0	1X0	Reserved
0	111	Reserved
1	000	ext $\overline{\text{DREQ1}}$
1	001	ASCI0 Rx
1	010	ASCI1 Rx
1	011	ext CKA0/$\overline{\text{DREQ0}}$
1	10X	Reserved
1	1X0	Reserved
1	111	Reserved

DMA Operation

This section discusses the three DMA operation modes for channel 0:

- Memory to/from memory
- Memory to/from I/O
- Memory to/from memory mapped I/O

In addition, the operation of channel 0 DMA with the on-chip ASCI (Asynchronous Serial Communication Interface) as well as Channel 1 DMA are described.

Memory to Memory—Channel 0

For memory to/from memory transfers, the external $\overline{\text{DREQ0}}$ input is not used for DMA transfer timing. Rather, the DMA operation is timed in one of two programmable modes – BURST or CYCLE STEAL. In both modes, the DMA operation automatically proceeds until termination (shown by byte count-BCR0) = `0`.

In BURST mode, the DMA operation proceeds until termination. In this case, the CPU cannot perform any program execution until the DMA operation is completed. In CYCLE STEAL mode, the DMA and CPU operation are alternated after each DMA byte transfer until the DMA is completed. The sequence:

- 1 CPU Machine Cycle
- DMA Byte Transfer

is repeated until DMA is completed. Figure 46 describes CYCLE STEAL mode DMA timing.

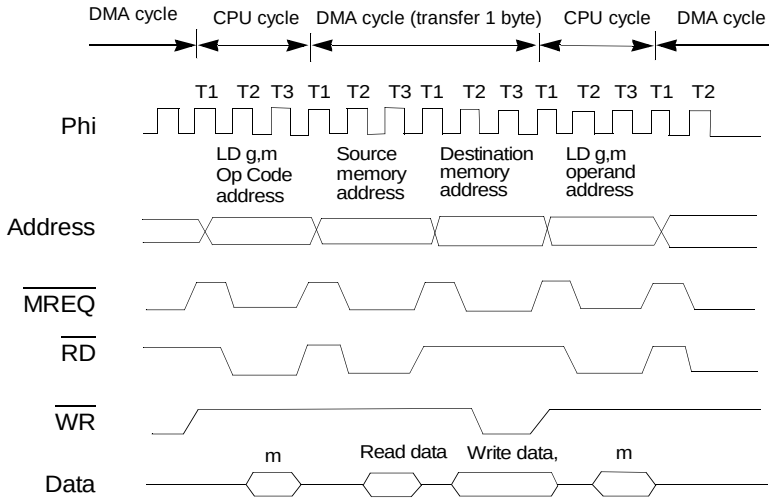

Figure 46. DMA Timing Diagram-CYCLE STEAL Mode

To initiate memory to/from memory DMA transfer for channel 0, perform the following operations.

1. Load the memory source and destination address into SAR0 and DAR0
2. Specify memory to/from memory mode and address increment/ decrement in the SM0 SM1, DM0 and DM1 bits of DMODE.
3. Load the number of bytes to transfer in BCR0.
4. Specify burst or cycle steal mode in the MMOD bit of DCNTL.
5. Program DE0 = `1` (with $\overline{\text{DWE0}}$ = `0` in the same access) in DSTAT and the DMA operation starts one machine cycle later. If interrupt occurs at the same time, the DIE0 bit must be set to `1`.

Memory to I/O (Memory Mapped I/O) — Channel 0

For memory to/from I/O (and memory to/from memory mapped I/O) the $\overline{\text{DREQ0}}$ input is used to time the DMA transfers. In addition, the $\overline{\text{TEND0}}$ (Transfer End) output is used to indicate the last (byte count register BCR0 = `00H`) transfer.

The $\overline{\text{DREQ0}}$ input can be programmed as level- or edge-sensitive.

When level-sense is programmed, the DMA operation begins when $\overline{\text{DREQ0}}$ is sampled Low. If $\overline{\text{DREQ0}}$ is sampled High, after the next DMA byte transfer, control is relinquished to the Z8X180 CPU. As illustrated in Figure 47, $\overline{\text{DREQ0}}$ is sampled at the rising edge of the clock cycle prior to T3, (that is, either T2 or Tw).

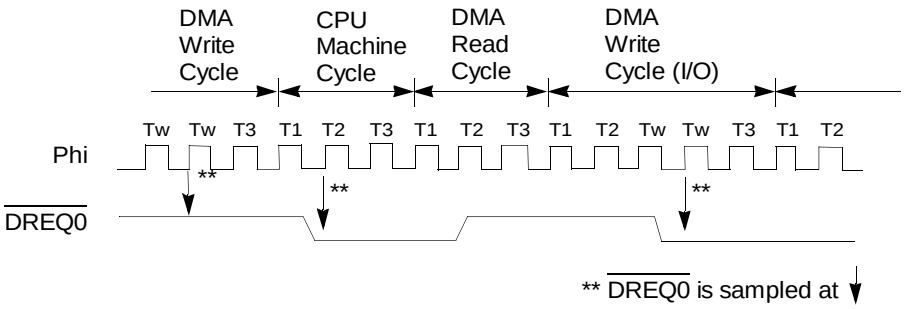

Figure 47. CPU Operation and DMA Operation $\overline{\text{DREQ0}}$ is Programmed for Level-Sense

When edge-sense is programmed, DMA operation begins at the falling edge of $\overline{\text{DREQ0}}$ If another falling edge is detected before the rising edge of the clock prior to T3 during DMA write cycle (that is T2 or Tw), the DMAC continues operating. If an edge is not detected, the CPU is given control after the current byte DMA transfer completes. The CPU continues operating until a $\overline{\text{DREQ0}}$ falling edge is detected before the

rising edge of the clock prior to T3 at which time the DMA operation (re)starts. Figure 48 depicts the edge-sense DMA timing.

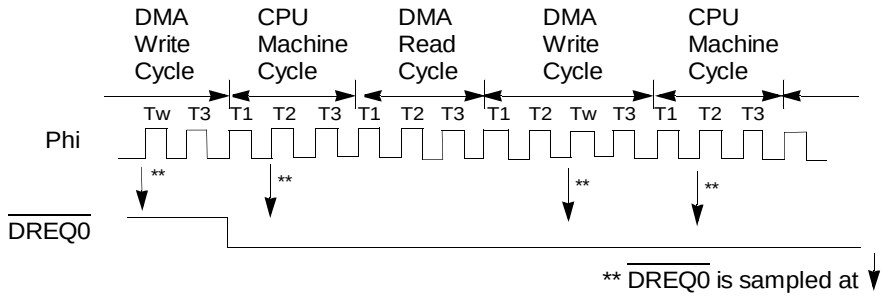

Figure 48. CPU Operation and DMA Operation $\overline{\text{DREQ0}}$ is Programmed for Edge-Sense

During the transfers for channel 0, the $\overline{\text{TEND0}}$ output goes Low synchronous with the write cycle of the last (BCR0 = 00H) DMA transfer (Reference Figure 49).

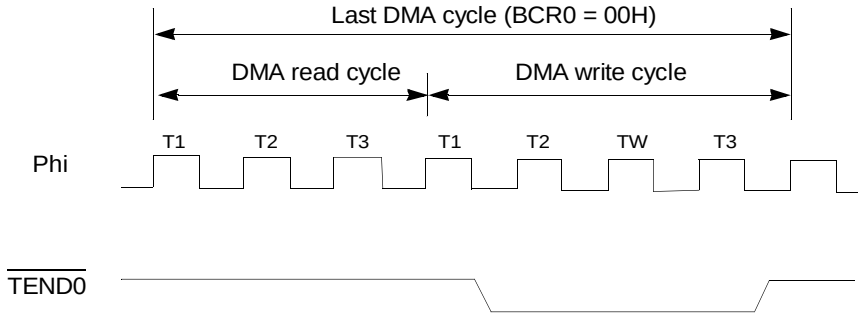

Figure 49. $\overline{\text{TEND0}}$ Output Timing Diagram

The $\overline{\text{DREQ0}}$ and $\overline{\text{TEND0}}$ pins are programmably multiplexed with the CKA0 and CKA1 ASCI clock input/outputs. However, when DMA channel 0 is programmed for memory to/from I/O (and memory to/from

memory mapped I/O. transfers, the CKA0/$\overline{\text{DREQ0}}$ pin automatically functions as input pin or output pin even if it has been programmed as output pin for CKA0. And the CKA1/$\overline{\text{TEND0}}$ pin functions as an input or an output pin for $\overline{\text{TEND0}}$ by setting CKA1D to 1 in CNTLA1.

To initiate memory to/from I/O (and memory to/from memory mapped I/O) DMA transfer for channel 0, perform the following operations:

1. Load the memory and I/O or memory mapped I/O source and destination addresses into SAR0 and DAR0.

   I/O addresses (not memory mapped I/O are limited to 16 bits (A0–A15). Make sure that bits A16, A17 and A19 are `0` (A18 is a don't care) to correctly enable the external $\overline{\text{DREQ0}}$ input.

2. Specify memory to/from I/O or memory to/from memory mapped I/O mode and address increment/decrement in the SM0, SM1, DM0 and DM1 bits of DMODE.

3. Load the number of bytes to transfer in BCR0.

4. Specify whether $\overline{\text{DREQ0}}$ is edge- or level-sense by programming the DMS0 bit of DCNTL.

5. Enable or disable DMA termination interrupt with the DIE0 bit in DSTAT.

6. Program DE0: = 1 (with $\overline{\text{DWEO}}$ = 0 in the same access) in DSTAT and the DMA operation begins under the control of the $\overline{\text{DREQ0}}$ input.

Memory to ASCI - Channel 0

Channel 0 has extra capability to support DMA transfer to/from the on-chip two channel ASCI. In this case, the external $\overline{\text{DREQ0}}$ input is not used for DMA timing. Rather, the ASCI status bits are used to generate an internal $\overline{\text{DREQ0}}$ The TDRE (Transmit Data Register Empty) bit and the RDRF (Receive Data Register Full) bit are used to generate an internal

$\overline{\text{DREQ0}}$ for ASCI transmission and reception respectively. To initiate memory to/from ASCI DMA transfer, perform the following operations:

1. Load the source and destination addresses into SAR0 and DAR0 Specify the I/O (ASCI) address as follows:
   a. Bits A0–A7 must contain the address of the ASCI channel transmitter or receiver (I/O addresses 6H-9H).
   b. Bits A8–A15 must equal 0.
   c. Bits SAR17–SAR16 must be set according to Table 16 to enable use of the appropriate ASCI status bit as an internal DMA request.

Table 16. DMA Transfer Request

SAR18	SAR17	SAR16	DMA Transfer Request
X	0	0	$\overline{\text{DREQ0}}$
X	0	1	RDRF (ASCI channel 0)
X	1	0	RDRF (ASCI channel 1)
X	1	1	Reserved
Note: X = Don't care			

DAR18	DAR17	DAR16	DMA Transfer Request
X	0	0	$\overline{\text{DREQ0}}$
X	0	1	TDRE (ASCI channel O)
X	1	0	TDRE (ASCI channel 1)
X	1	1	Reserved
Note: X = Don't care			

2. Specify memory ↔ I/O transfer mode and address increment/decrement in the SM0, SM1, DM0 and DM1 bits of DMODE.
3. Load the number of bytes to transfer in BCR0
4. The DMA request sense mode (DMS0 bit in DCNTL) must be specified as *edge sense*.
5. Enable or disable DMA termination interrupt with the DIE0 bit in DSTAT.
6. Program DE0 =`1` (with $\overline{\text{DWE0}}$ = `0` in the same access) in DSTAT and the DMA operation with the ASCI begins under control of the ASCI generated internal DMA request.

The ASCI receiver or transmitter using DMA is initialized to allow the first DMA transfer to begin.

The ASCI receiver must be *empty* as shown by RDRF = `0`.

The ASCI transmitter must be *full* as shown by TDRE = 0. Thus, the first byte is written to the ASCI Transmit Data Register under program control. The remaining bytes are transferred using DMA.

Channel 1 DMA

DMAC Channel 1 performs memory to/from I/O transfers. Except for different registers and status/control bits, operation is exactly the same as described for channel 0 memory to/from I/O DMA.

To initiate a DMA channel 1 memory to/from I/O transfer, perform the following operations:

1. Load the memory address (20 bits) into MAR1.
2. Load the I/O address (16 bits) into IAR1.
3. Program the source/destination and address increment/decrement mode using the DIM1 and DIM0 bits in DCNTL.

4. Specify whether $\overline{\text{DREQ1}}$ is level- or edge- sense in the DMS1 bit in DCNTL.
5. Enable or disable DMA termination interrupt with the DIE1 bit in DSTAT.
6. Program DE1 = 1 (with $\overline{\text{DWE1}}$ = 0 in the same access) in DSTAT and the DMA operation with the external I/O device begins using the external $\overline{\text{DREQ1}}$ input and $\overline{\text{TEND1}}$ output.

DMA Bus Timing

When memory (and memory mapped I/O) is specified as a source or destination, $\overline{\text{MREQ}}$ goes Low during the memory access. When I/O is specified as a source or destination, $\overline{\text{IORQ}}$ goes Low during the I/O access.

When I/O (and memory mapped I/O) is specified as a source or destination, the DMA timing is controlled by the external $\overline{\text{DREQ}}$ input and the $\overline{\text{TEND}}$ output indicates DMA termination

Note: External I/O devices may not overlap addresses with internal I/O and control registers, even using DMA.

For I/O accesses, one Wait State is automatically inserted. Additional Wait States can be inserted by programming the on-chip wait state generator or using the external $\overline{\text{WAIT}}$ input.

Note: For memory mapped I/O accesses, this automatic I/O Wait State is not inserted.

For memory to memory transfers (channel 0 only), the external $\overline{\text{DREQ0}}$ input is ignored. Automatic DMA timing is programmed as either BURST or CYCLE STEAL.

When a DMA memory address carry/borrow between bits A15 and A16 of the address bus occurs (crossing 64KB boundaries), the minimum bus

cycle is extended to 4 clocks by automatic insertion of one internal Ti state.

DMAC Channel Priority

For simultaneous $\overline{\text{DREQ0}}$ and $\overline{\text{DREQ1}}$ requests, channel 0 has priority over channel 1. When channel 0 is performing a memory to/from memory transfer, channel 1 cannot operate until the channel 0 operation has terminated. If channel 1 is operating, channel 0 cannot operate until channel 1 releases control of the bus.

DMAC and BUSREQ, BUSACK

The $\overline{\text{BUSREQ}}$ and $\overline{\text{BUSACK}}$ inputs allow another bus master to take control of the Z8X180 bus. $\overline{\text{BUSREQ}}$ and $\overline{\text{BUSACK}}$ take priority over the on-chip DMAC and suspends DMAC operation. The DMAC releases the bus to the external bus master at the breakpoint of the DMAC memory or I/O access. Since a single byte DMAC transfer requires a read and a write cycle, it is possible for the DMAC to be suspended after the DMAC read, but before the DMAC write. Hence, when the external master releases the Z8X180 bus ($\overline{\text{BUSREQ}}$ High), the on-chip DMAC correctly continues the suspended DMA operation.

DMAC Internal Interrupts

Figure 50 illustrates the internal DMA interrupt request generation circuit.

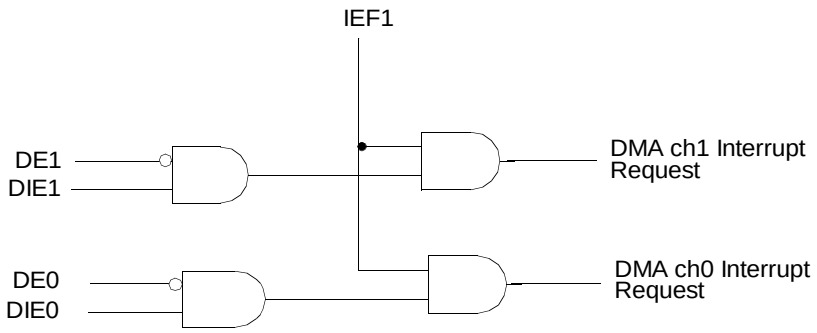

Figure 50. DMA Interrupt Request Generation

DE0 and DE1 are automatically cleared to `0` by the Z8X180 at the completion (byte count is `0`) of a DMA operation for channel 0 and channel 1, respectively. They remain `0` until a `1` is written. Because DE0: and DE1 use level sense, an interrupt occurs if the CPU IEF1 flag is set to `1`. Therefore, the DMA termination interrupt service routine disables further DMA interrupts (by programming the channel DIE bit is `0`) before enabling CPU interrupts (for example, IEF1 is set to `1`). After reloading the DMAC address and count registers, the DIE bit can be set to `1` to reenable the channel interrupt, and at the same time DMA can resume by programming the channel DE bit = `1`.

DMAC and $\overline{\text{NMI}}$

$\overline{\text{NMI}}$, unlike all other interrupts, automatically disables DMAC operation by clearing the DME bit of DSTAT. Thus, the $\overline{\text{NMI}}$ interrupt service routine responds to time-critical events without delay due to DMAC bus usage. Also, $\overline{\text{NMI}}$ can be effectively used as an external DMA abort input, recognizing that both channels are suspended by the clearing of DME.

If the falling edge of $\overline{NMI}$ occurs before the falling clock of the state prior to T3 (T2 or Tw) of the DMA write cycle, the DMAC is suspended and the CPU starts the $\overline{NMI}$ response at the end of the current cycle. By setting a channel's DE bit to `1`, the channel's operation is restarted and DMA correctly resumes from its suspended point by $\overline{NMI}$. (Reference Figure 51.)

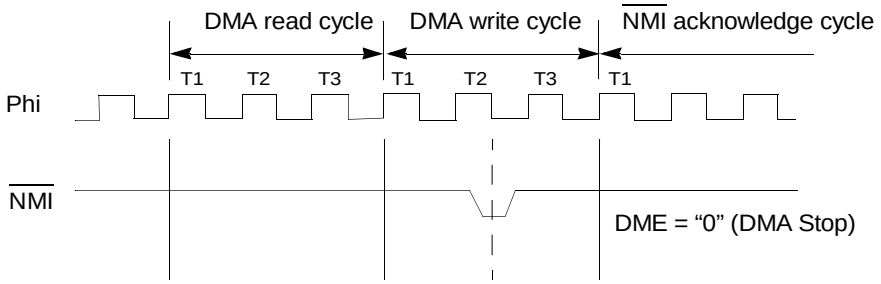

Figure 51. $\overline{NMI}$ and DMA Operation Timing Diagram

DMAC and RESET

During RESET the bits in DSTAT, DMODE, and DCNTL are initialized as stated in their individual register descriptions. Any DMA operation in progress is stopped, allowing the CPU to use the bus to perform the RESET sequence. However, the address register (SAR0, DAR0 MAR1, IAR1) and byte count register (BCR0 BCR1) contents are not changed during RESET.

Asynchronous Serial Communication Interface (ASCI)

The Z8X180 on-chip ASCI has two independent full-duplex channels. Based on full programmability of the following functions, the ASCI directly communicates with a wide variety of standard UARTs (Universal Asynchronous Receiver/Transmitter) including the Z8440 SIO and the Z85C30 SCC.

The key functions for ASCI on Z80180, Z8S180 and Z8L180 class processors are listed below. Each channel is independently programmable.

- Full-duplex communication
- 7- or 8-bit data length
- Program controlled 9th data bit for multiprocessor communication
- 1 or 2 stop bits
- Odd, even, no parity
- Parity, overrun, framing error detection
- Programmable baud rate generator, /16 and /64 modes
- Modem control signals – Channel 0 contains $\overline{DCD0}$, $\overline{CTS0}$ and $\overline{RTS0}$; Channel 1 contains $\overline{CTS1}$
- Programmable interrupt condition enable and disable
- Operation with on-chip DMAC

ASCI Block Diagram for the Z8S180/Z8L180-Class Processors

Figure 52 illustrates the ASCI block diagram.

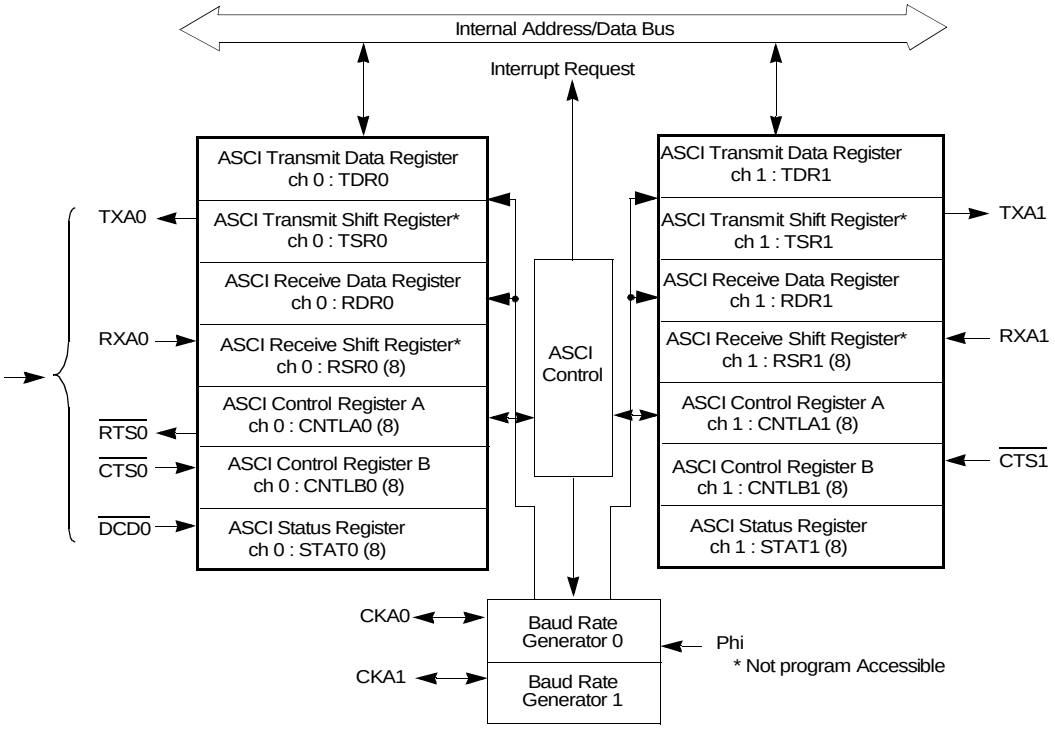

Figure 52. ASCI Block Diagram

ASCI Register Description

The following subparagraphs explain the various functions of the ASCI registers.

ASCI Transmit Shift Register 0, 1 (TSR0, 1)

When the ASCI Transmit Shift Register receives data from the ASCI Transmit Data Register (TDR), the data is shifted out to the TXA pin.

When transmission is completed, the next byte (if available) is automatically loaded from TDR into TSR and the next transmission starts. If no data is available for transmission, TSR idles by outputting a continuous High level. The TSR is not program-accessible.

ASCI Transmit Data Register 0, 1(TDR0,1:I/O Address = 06H, 07H)

Data written to the ASCI Transmit Data Register is transferred to the TSR as soon as TSR is empty. Data can be written while TSR is shifting out the previous byte of data. Thus, the ASCI transmitter is double buffered. Data can be written into and read from the ASCI Transmit Data Register.

If data is read from the ASCI Transmit Data Register, the ASCI data transmit operation is not affected by this read operation.

ASCI Transmit Data Register Ch. 0 (TDR0: 06H)

Bit	7	6	5	4	3	2	1	0
Bit/Field	ASCI Transmit Channel 0							
R/W	R/W							
Reset	0							
Note: R = Read W = Write X = Indeterminate ? = Not Applicable								

ASCI Transmit Data Register Ch. 1 (TDR1: 07H)

Bit	7	6	5	4	3	2	1	0
Bit/Field	ASCI Transmit Channel 1							
R/W	R/W							
Reset	0							
Note: R = Read W = Write X = Indeterminate ? = Not Applicable								

ASCI Receive Shift Register 0,1(RSR0, 1)

This register receives data shifted in on the RXA pin. When full, data is automatically transferred to the ASCI Receive Data Register (RDR) if it is empty. If RSR is not empty when the next incoming data byte is shifted in, an overrun error occurs. The RSR is not program-accessible.

ASCI Receive Data Register 0,1 (RDR0, 1: I/O Address = 08H, 09H)

When a complete incoming data byte is assembled in RSR, it is automatically transferred to the RDR if RDR is empty. The next incoming data byte can be shifted into RSR while RDR contains the previous received data byte. Thus, the ASCI receiver on Z80180 is double-buffered.

ASCI Receive Data Register Ch. 0 (RDR0: 08H)

Bit	7	6	5	4	3	2	1	0
Bit/Field	ASCI Receive Channel 0							
R/W	R/W							
Reset	0							
Note: R = Read W = Write X = Indeterminate ? = Not Applicable								

ASCI Receive Data Register Ch. 1 (RDR1: 09H)

Bit	7	6	5	4	3	2	1	0
Bit/Field	ASCI Receive Channel 1							
R/W	R/W							
Reset	0							
Note: R = Read W = Write X = Indeterminate ? = Not Applicable								

\

On the Z8S180 and Z8L180-class processors are quadruple buffered. The ASCI Receive Data Register is a read-only register. However, if RDRF =

0, data can be written into the ASCII Receive Data Register, and the data can be read.

ASCI Status Register 0, 1 (STAT0, 1)

Each channel status register allows interrogation of ASCI communication, error and modem control signal status, and enabling or disabling of ASCI interrupts.

ASCI Status Register 0 (STAT0: 04H)

Bit	7	6	5	4	3	2	1	0
Bit/Field	RDRF	OVRN	PE	FE	RIE	$\overline{DCD0}$	TDRE	TIE
R/W	R	R	R	R	R/W	R	R	R/W
Reset	0	0	0	0	0	0	0	0

Note: R = Read W = Write X = Indeterminate ? = Not Applicable

Bit Position	Bit/Field	R/W	Value	Description
7	RDRF	R		**Receive Data Register Full** — RDRF is set to 1 when an incoming data byte is loaded into RDR. If a framing or parity error occurs, RDRF remains set and the receive data (which generated the error) is still loaded into RDR. RDRF is cleared to 0 by reading RDR, when the $\overline{DCD0}$ input is High, in IOSTOP mode, and during RESET.
6	OVRN	R		**Overrun Error** — OVRN is set to 1 when RDR is full and RSR becomes full. OVRN is cleared to 0 when the EFR bit (Error Flag Reset) of CNTLA is written to 0, when DCD0 is High, in IOSTOP mode, and during RESET.

Bit Position	Bit/Field	R/W	Value	Description
5	PE	R		**Parity Error** — PE is set to 1 when a parity error is detected on an incoming data byte and ASCI parity detection is enabled (the MOD1 bit of CNTLA is set to 1). PE is cleared to 0 when the EFR bit (Error Flag Reset) of CNTLA is written to 0, when DCD0 is High, in IOSTOP mode, and during RESET.
4	FE	R		**Framing Error** — If a receive data byte frame is delimited by an invalid stop bit (that is, 0, should be 1), FE is set to 1. FE is cleared to 0 when the EFR bit (Error Flag Reset) of CNTLA is written to 0, when DCD0 is High, in IOSTOP mode, and during RESET.
3	RIE	R/W		**Receive Interrupt Enable** — RIE must be set to 1 to enable ASCI receive interrupt requests. When RIE is 1, if any of the flags RDRF, OVRN, PE, or FE become set to 1, an interrupt request is generated. For channel 0, an interrupt is also generated by the transition of the external DCD0 input from Low to High.
2	$\overline{\text{DCD0}}$	R		**Data Carrier Detect** — Channel 0 has an external $\overline{\text{DCD0}}$ input pin. The $\overline{\text{DCD0}}$ bit is set to 1 when the $\overline{\text{DCD0}}$ input is HIGH. It is cleared to 0 on the first read of (STAT0, following the $\overline{\text{DCD0}}$ input transition from HIGH to LOW and during RESET. When $\overline{\text{DCD0}}$ is 1, receiver unit is reset and receiver operation is inhibited.
1	TDRE	R		**Transmit Data Register Empty** — TDRE = 1 indicates that the TDR is empty and the next transmit data byte is written to TDR. After the byte is written to TDR, TDRE is cleared to 0 until the ASCI transfers the byte from TDR to the TSR and then TDRE is again set to 1. TDRE is set to 1 in IOSTOP mode and during RESET. When the external $\overline{\text{CTS}}$ input is High, TDRE is reset to 0.

Bit Position	Bit/Field	R/W	Value	Description
0	TIE	R/W		**Transmit Interrupt Enable** — TIE must be set to 1 to enable ASCI transmit interrupt requests. If TIE is 1, an interrupt is requested when TDRE is 1. TIE is cleared to 0 during RESET.

ASCI Control Register A0, 1 (CNTLA0, 1)

Each ASCI channel Control Register A configures the major operating modes such as receiver/transmitter enable and disable, data format, and multiprocessor communication mode.

ASCI Status Register 1 (STAT1: 05H)

Bit	7	6	5	4	3	2	1	0
Bit/Field	RDRF	OVRN	PE	FE	RIE	CTS1E	TDRE	TIE
R/W	R	R	R	R	R/W	R/W	R	R/W
Reset	0	0	0	0	0	0	0	0

Note: R = Read W = Write X = Indeterminate ? = Not Applicable

Bit Position	Bit/Field	R/W	Value	Description
7	RDRF	R		**Receive Data Register Full** — RDRF is set to 1 when an incoming data byte is loaded into RDR. Note that if a framing or parity error occurs, RDRF is still set and the receive data (which generated the error) is still loaded into RDR. RDRF is cleared to 0 by reading RDR, when the DCD0 input is High, in IOSTOP mode, and during RESET.
6	OVRN	R		**Overrun Error** — OVRN is set to 1 when RDR is full and RSR becomes full. OVRN is cleared to 0 when the EFR bit (Error Flag Reset) of CNTLA is written to 0, when DCD0 is High, in IOSTOP mode, and during RESET.
5	PE	R		**Parity Error** — PE is set to 1 when a parity error is detected on an incoming data byte and ASCI parity detection is enabled (the MOD1 bit of CNTLA is set to 1). PE is cleared to 0 when the EFR bit (Error Flag Reset) of CNTLA is written to 0, when DCD0 is High, in IOSTOP mode, and during RESET.

Bit Position	Bit/Field	R/W	Value	Description
4	FE	R		**Framing Error** — If a receive data byte frame is delimited by an invalid stop bit (that is, 0, should be 1), FE is set to 1. FE is cleared to 0 when the EFR bit (Error Flag Reset) of CNTLA is written to 0, when DCD0 is High, in IOSTOP mode, and during RESET.
3	RIE	R/W		**Receive Interrupt Enable** — RIE must be set to 1 to enable ASCI receive interrupt requests. When RIE is 1, if any of the flags RDRF, OVRN, PE, or FE become set to 1, an interrupt request is generated. For channel 0, an interrupt is also generated by the transition of the external $\overline{\text{DCD0}}$ input from Low to High.
2	CTS1E	R/W		**Channel 1 $\overline{\text{CTS}}$ Enable** — Channel 1 has an external $\overline{\text{CTS1}}$ input which is multiplexed with the receive data pin (RXS) for the CSI/O (Clocked Serial I/O Port). Setting CTS1E to 1 selects the $\overline{\text{CTS1}}$ function and clearing CTS1E to 0 selects the RXS function.
1	TDRE	R		**Transmit Data Register Empty** — TDRE = 1 indicates that the TDR is empty and the next transmit data byte is written to TDR. After the byte is written to TDR, TDRE is cleared to 0 until the ASCI transfers the byte from TDR to the TSR and then TDRE is again set to 1. TDRE is set to 1 in IOSTOP mode and during RESET. When the external $\overline{\text{CTS}}$ input is High, TDRE is reset to 0.
0	TIE	R/W		**Transmit Interrupt Enable** — TIE must be set to 1 to enable ASCI transmit interrupt requests. If TIE is 1, an interrupt is requested when TDRE is 1. TIE is cleared to 0 during RESET.

ASCI Control Register A0, 1 (CNTLA0, 1)

Each ASCI channel Control Register A configures the major operating modes such as receiver/transmitter enable and disable, data format, and multiprocessor communication mode.

ASCI Control Register A 0 (CNTLA0: 00H)

Bit	7	6	5	4	3	2	1	0
Bit/Field	MPE	RE	TE	$\overline{\text{RTS0}}$	MPBR/ EFR	MOD2	MOD1	MOD0
R/W	R/W	R/W	R/W	R/W	R/W	R/W	R/W	R/W
Reset	0	0	0	1	X	0	0	0

Note: R = Read W = Write X = Indeterminate ? = Not Applicable

Bit Position	Bit/Field	R/W	Value	Description
7	MPE	R/W		**Multi-Processor Mode Enable** — The ASCI has a multiprocessor communication mode which utilizes an extra data bit for selective communication when a number of processors share a common serial bus. Multiprocessor data format is selected when the MP bit in CNTLB is set to 1. If multiprocessor mode is not selected (MP bit in CNTLB = 0), MPE has no effect. If multiprocessor mode is selected, MPE enables or disables the wakeup feature as follows. If MPE is set to 1, only received bytes in which the MPB (multiprocessor bit) is 1 can affect the RDRF and error flags. Effectively, other bytes (with MPB is 0) are ignored by the ASCI. If MPE is reset to 0, all bytes, regardless of the state of the MPB data bit, affect the RDRF and error flags.

Bit Position	Bit/Field	R/W	Value	Description
6	RE	R/W		**Receiver Enable** — When RE is set to 1, the ASCI receiver is enabled. When RE is reset to 0, the receiver is disabled and any receive operation in progress is interrupted. However, the RDRF and error flags are not reset and the previous contents of RDRF and error flags are held. RE is cleared to 0 in IOSTOP mode, and during RESET.
5	TE	R/W		**Transmitter Enable** — When TE is set to 1, the ASCI transmitter is enabled. When TE is reset to 0, the transmitter is disabled and any transmit operation in progress is interrupted. However, the TDRE flag is not reset and the previous contents of TDRE are held. TE is cleared to 0 in IOSTOP mode, and during RESET.
4	$\overline{\text{RTS0}}$	R/W		**Request to Send Channel 0** — When $\overline{\text{RTS0}}$ is reset to 0, the $\overline{\text{RTS0}}$ output pin goes Low. When $\overline{\text{RTS0}}$ is set to 1, the $\overline{\text{RTS0}}$ output immediately goes High.
3	MPBR/ EFR	R/W		**Multiprocessor Bit Receive/Error Flag Reset** — When multiprocessor mode is enabled (MP in CNTLB is 1), MPBR, when read, contains the value of the MPB bit for the last receive operation. When written to 0, the EFR function is selected to reset all error flags (OVRN, FE and PE) to 0. MPBR/EFR is undefined during RESET.

Bit Position	Bit/Field	R/W	Value	Description
2–0	MOD2–0	R/W		**ASCI Data Format Mode 2, 1, 0** — These bits program the ASCI data format as follows. **MOD2** 0: 7 bit data 1: 8 bit data **MOD1** 0: No parity 1: Parity enabled **MOD0** 0: 1 stop bit 1: 2 stop bits The data formats available based on all combinations of MOD2, MOD1 and MOD0 are described in Table 17.

ASCI Control Register A 1 (CNTLA1: 01H)

Bit	7	6	5	4	3	2	1	0
Bit/Field	MPE	RE	TE	CKA1D	MPBR/ EFR	MOD2	MOD1	MOD0
R/W	R/W	R/W	R/W	R/W	R/W	R/W	R/W	R/W
Reset	0	0	0	0	X	0	0	0

R = Read W = Write X = Indeterminate ? = Not Applicable

Bit Position	Bit/Field	R/W	Value	Description
7	MPE	R/W		**Multi-Processor Mode Enable** — The ASCI has a multiprocessor communication mode which utilizes an extra data bit for selective communication when a number of processors share a common serial bus. Multiprocessor data format is selected when the MP bit in CNTLB is set to 1. If multiprocessor mode is not selected (MP bit in CNTLB = 0), MPE has no effect. If multiprocessor mode is selected, MPE enables or disables the wakeup feature as follows. If MPE is set to 1, only received bytes in which the MPB (multiprocessor bit) is 1 can affect the RDRF and error flags. Effectively, other bytes (with MPB = 0) are ignored by the ASCI. If MPE is reset to 0, all bytes, regardless of the state of the MPB data bit, affect the RDRF and error flags.
6	RE	R/W		**Receiver Enable** — When RE is set to 1, the ASCI receiver is enabled. When RE is reset to 0, the receiver is disabled and any receive operation in progress is interrupted. However, the RDRF and error flags are not reset and the previous contents of RDRF and error flags are held. RE is cleared to 0 in IOSTOP mode, and during RESET.

Bit Position	Bit/Field	R/W	Value	Description
5	TE	R/W		**Transmitter Enable** — When TE is set to 1, the ASCI transmitter is enabled. When TE is reset to 0, the transmitter is disabled and any transmit operation in progress is interrupted. However, the TDRE flag is not reset and the previous contents of TDRE are held. TE is cleared to 0 in IOSTOP mode, and during RESET.
4	CKA1D	R/W		**CKA1 Clock Disable** — When CKA1D is set to 1, the multiplexed CKA1/$\overline{\text{TEND0}}$ pin is used for the $\overline{\text{TEND0}}$ function. When CKA1 D is 0, the pin is used as CKA1, an external data dock input/output for channel 1
3	MPBR/ EFR	R/W		**Multiprocessor Bit Receive/Error Flag Reset** — When multiprocessor mode is enabled (MP in CNTLB is 1), MPBR, when read, contains the value of the MPB bit for the last receive operation. When written to 0, the EFR function is selected to reset all error flags (OVRN, FE and PE) to 0. MPBR/EFR is undefined during RESET.

Bit Position	Bit/Field	R/W	Value	Description
2–0	MOD2–0	R/W		**ASCI Data Format Mode 2, 1, 0** — These bits program the ASCI data format as follows. **MOD2** 0: 7 bit data 1: 8 bit data **MOD1** 0: No parity 1: Parity enabled **MOD0** 0: 1 stop bit 1: 2 stop bits The data formats available based on all combinations of MOD2, MOD1 and MOD0 are described in Table 17.

Table 17. Data Formats

MOD2	MOD1	MOD0	Data Format
0	0	0	Start + 7 bit data + 1 stop
0	0	1	Start + 7 bit date + 2 Stop
0	1	0	Start + 7 bit data + parity + 1 stop
0	1	1	Start + 7 bit data + parity + 2 stop
1	0	0	Start + 8 bit data + 1 stop
1	0	1	Start + 8 bit data + 2 stop
1	1	0	Start + 8 bit data + parity + 1 stop
1	1	1	Start + 8 bit date + parity + 2 stop

ASCI Control Register B0, 1 (CNTLB0, 1)

Each ASCI channel control register B configures multiprocessor mode, parity and baud rate selection.

ASCI Control Register B 0 (CNTLB0: 02H)
ASCI Control Register B 1 (CNTLB1: 03H)

Bit	7	6	5	4	3	2	1	0
Bit/Field	MPBT	MP	$\overline{CTS}$/PS	PE0	DR	SS2	SS1	SS0
R/W	R/W	R/W	R/W	R/W	R/W	R/W	R/W	R/W
Reset	X	0	0	0	0	1	1	1

Note: R = Read W = Write X = Indeterminate ? = Not Applicable

Bit Position	Bit/Field	R/W	Value	Description
7	MPBT	R/W		**Multiprocessor Bit Transmit** — When multiprocessor communication format is selected (MP bit is 1), MPBT is used to specify the MPB data bit for transmission. If MPBT is 1, then MPB = 1 is transmitted. If MPBT is 0, then MPBT = 0 is transmitted. MPBT state is undefined during and after RESET.
6	MP	R/W		**Multiprocessor Mode** — When MP is set to 1, the data format is configured for multiprocessor mode based on the MOD2 (number of data bits) and MOD0 (number of stop bits) bits in CNTLA. The format is as follows. Start bit + 7 or 8 data bits + MPB bit + 1 or 2 stop bits Multiprocessor (MP = 1) format has no provision for parity. If MP is 0, the data format is based on MOD0 MOD1, MOD2, and may include parity. The MP bit is cleared to 0 during RESET.

Bit Position	Bit/Field	R/W	Value	Description
5	$\overline{CTS}$/PS	R/W		**Clear to Send/Prescale** — When read, $\overline{CTS}$/PS reflects the state of the external $\overline{CTS}$ input. If the $\overline{CTS}$ input pin is High, $\overline{CTS}$/PS is read as 1. When the $\overline{CTS}$ input pin is High, the TDRE bit is inhibited (that is, held at 0). For channel 1, the $\overline{CTS1}$ input is multiplexed with RXS pin (Clocked Serial Receive Data). Thus, $\overline{CTS}$/PS is only valid when read if the channel 1 CTS1E bit is 1 and the $\overline{CST1}$ input pin function is selected. The read data of $\overline{CTS}$/PS is not affected by RESET. When written, CT /PS specifies the baud rate generator prescale factor. If $\overline{CTS}$/PS is set to 1, the system clock is prescaled by 30 while if $\overline{CTS}$/PS is cleared to 0, the system clock is prescaled by 10.CTS/PS is cleared to 0 during RESET.
4	PEO	R/W		**Parity Even Odd** — PE0 selects even or odd parity. PE0 does not affect the enabling/disabling of parity (MOD1 bit of CNTLA). If PE0 is cleared to 0, even parity is selected. If PE0 is set to 1, odd parity is selected.PE0 is cleared to 0 during RESET.
3	DR	R/W		**Divide Ratio** — DR specifies the divider used to obtain baud rate from the data sampling clock If DR is reset to 0, divide by 16 is used, while if DR is set to 1, divide by 64 is used. DR is cleared to 0 during RESET.
2–0	SS2–0	R/W		**Source/Speed Select** — Specifies the data clock source (internal or external) and baud rate prescale factor. SS2, SS1, and SS0 are all set to 1 during RESET. Table 18 describes the divide ratio corresponding to SS2, SS1 and SS0

The external ASCI channel 0 data clock pins are multiplexed with DMA control lines (CKA0/$\overline{DREQ}$ and CKA1/$\overline{TEND0}$). During RESET, these

pins are initialized as ASCI data clock inputs. If SS2, SS1 and SS0 are reprogrammed (any other value than SS2, SS1, SS0 = 1) these pins become ASCI data clock inputs. However, if DMAC channel 0 is configured to perform memory to/from I/O (and memory mapped I/O) transfers the CKA0/$\overline{\text{DREQ0}}$ pin reverts to DMA control signals regardless of SS2, SS1, SS0 programming.

Also, if the CKA1D bit in the CNTLA register is 1, then the CKA1/$\overline{\text{TEND0}}$ reverts to the DMA Control output function regardless of SS2, SS1 and SS0 programming. Final data clock rates are based on $\overline{\text{CTS}}$/PS (prescale), DR, SS2, SS1, SS0 and the Z8X180 system clock frequency (Reference Table 19).

Table 18. Divide Ratio

SS2	SS1	SS0	Divide Ratio
0	0	0	÷ 1
0	0	1	÷ 2
0	1	0	÷ 4
0	1	1	÷ 8
1	0	0	÷ 16
1	0	1	÷ 32
1	1	0	÷ 64
1	1	1	external clock

Each ASCI channel control register B configures multiprocessor mode, parity and baud rate selection.

ASCI0 Extension Control Register (I/O Address: 12H) (Z8S180/L180-Class Processors Only)

Bit	7	6	5	4	3	2	1	0
Bit/Field	RDRF Int Inhibit	DCD0 Disable	CTS0 Disable	X1 Bit Clk ASCI0	BRG0 Mode	Break Feature Enable	Break Detect (RO)	Send Break
R/W	R/W	R/W	R/W	R/W	R/W	R/W	R/W	R/W
Reset	0	0	0	0	0	0	0	0

Note: R = Read W = Write X = Indeterminate ? = Not Applicable

Bit Position	Bit/Field	R/W	Value	Description
7	RDRF Interrupt Inhibit	R/W	0 1	RDRF Interrupt Inhibit On RDRF Interrupt Inhibit Off
6	DCD0 Disable	R/W	0 1	DCD0 Auto-enables Rx DCD0 advisory to SW
5	CTS0 Disable	R/W	0 1	CTS0 Auto-enable Tx CTS0 advisory to SW
4	X1 Bit Clk ASCI0	R/W	0 1	CKA0 /16 or /64 CKA0 is bit clock
3	BRG0 Mode	R/W	0 1	As S180 Enable 16-bit BRG counter
2	Break Feature Enable	R/W	0 1	Break Feature Enable On Break Feature Enable Off
1	Break Detect (RO)	R/W	0 1	Break Detect On Break Detect Off

Bit Position	Bit/Field	R/W	Value	Description
0	Send Break	R/W	0 1	Normal Xmit Drive TXA Low

Each ASCI channel control register B configures multiprocessor mode, parity and baud rate selection.

ASCI1 Extension Control Register (I/O Address: 13H) (Z8S180/L180-Class Processors Only)

Bit	7	6	5	4	3	2	1	0
Bit/Field	RDRF Int Inhibit	Reserved		X1 Bit Clk ASCI1	BRG1 Mode	Break Feature Enable	Break Detect (RO)	Send Break
R/W	R/W	?		R/W	R/W	R/W	R/W	R/W
Reset	0	0		0	0	0	0	0

Note: R = Read W = Write X = Indeterminate ? = Not Applicable

Bit Position	Bit/Field	R/W	Value	Description
7	RDRF Interrupt Inhibit	R/W	0 1	RDRF Interrupt Inhibit On RDRF Interrupt Inhibit Off
6–5	Reserved	?	0	Reserved. Must be 0
4	X1 Bit Clk ASCI1	R/W	0 1	CKA1 /16 or /64 CKA1 is bit clock
3	BRG1 Mode	R/W	0 1	As S180 Enable 16-bit BRG counter

Bit Position	Bit/Field	R/W	Value	Description
2	Break Feature Enable	R/W	0 1	Break Feature Enable On Break Feature Enable Off
1	Break Detect (RO)	R/W	0 1	Break Detect On Break Detect Off
0	Send Break	R/W	0 1	Normal Xmit Drive TXA Low

Each ASCI channel control register B configures multiprocessor mode, parity and baud rate selection.

ASCI0 Time Constant Low Register (I/O Address: 1AH) (Z8S180/L180-Class Processors Only)

Bit	7	6	5	4	3	2	1	0
R/W	R/W	R/W	R/W	R/W	R/W	R/W	R/W	R/W
Reset	0	0	0	0	0	0	0	0

Note: R = Read W = Write X = Indeterminate ? = Not Applicable

ASCI0 Time Constant High Register (I/O Address: 1BH) (Z8S180/L180-Class Processors Only)

Bit	7	6	5	4	3	2	1	0
R/W	R/W	R/W	R/W	R/W	R/W	R/W	R/W	R/W
Reset	0	0	0	0	0	0	0	0

Note: R = Read W = Write X = Indeterminate ? = Not Applicable

ASCI1 Time Constant Low Register (I/O Address: 1CH) (Z8S180/L180-Class Processors Only)

Bit	7	6	5	4	3	2	1	0
R/W	R/W	R/W	R/W	R/W	R/W	R/W	R/W	R/W
Reset	0	0	0	0	0	0	0	0

Note: R = Read W = Write X = Indeterminate ? = Not Applicable

ASCI1 Time Constant High Register (I/O Address: 1DH) (Z8S180/L180-Class Processors Only)

Bit	7	6	5	4	3	2	1	0
R/W	R/W	R/W	R/W	R/W	R/W	R/W	R/W	R/W
Reset	0	0	0	0	0	0	0	0

Note: R = Read W = Write X = Indeterminate ? = Not Applicable

Modem Control Signals

ASCI channel 0 has $\overline{\text{CTS0}}$, $\overline{\text{DCD0}}$ and $\overline{\text{RTS0}}$ external modem control signals. ASCI channel 1 has a $\overline{\text{CTS1}}$ modem control signal which is multiplexed with Clocked Serial Receive Data (RXS).

$\overline{\text{CTS0}}$: Clear to Send 0 (Input)

The $\overline{\text{CTS0}}$ input allows external control (start/stop) of ASCI channel 0 transmit operations. When $\overline{\text{CTS0}}$ is High, the channel 0 TDRE bit is held at 0 whether or not the TDR0 (Transmit Data Register) is full or empty. When $\overline{\text{CTS0}}$ is Low, TDRE reflects the state of TDR0. The actual transmit operation is not disabled by CT High, only TDRE is inhibited:

$\overline{\text{DCD0}}$: Data Carrier Detect 0 (Input)

The $\overline{\text{DCD0}}$ input allows external control (start/stop) of ASCI channel 0 receive operations. When DCD0 is High, the channel 0 RDRF bit is held at 0 whether or not the RDR0, (Receive Data Register) is full or empty.

The error flags (PE, FE, and OVRN bits) are also held at 0. Even after the $\overline{DCD0}$ input goes Low, these bits do not resume normal operation until the status register (STAT0, is read. This first read of (STAT0, while enabling normal operation, still indicates the $\overline{DCD0}$ input is High ($\overline{DCD0}$ bit = 1) even though it has gone Low. Thus, the STAT0 register must be read twice to ensure the $\overline{DCD0}$ bit is reset to 0:

$\overline{RTS0}$: Request to Send 0 (Output)

$\overline{RTS0}$ allows the ASCI to control (start/stop) another communication devices transmission (for example, by connection to that device's $\overline{CTS}$ input). $\overline{RTS0}$ is essentially a 1-bit output port, having no side effects on other ASCI registers or flags.

$\overline{CTS1}$: Clear to Send 1 (Input)

Channel 1 $\overline{CTS1}$ input is multiplexed with Clocked Serial Receive Data (RXS). The $\overline{CTS1}$ function is selected when the $\overline{CTS1E}$ bit in STAT1 is set to 1. When enabled, the $\overline{CTS1}$ operation is equivalent to CTS0,

Modem control signal timing is depicted in Figure 53 and Figure 54.

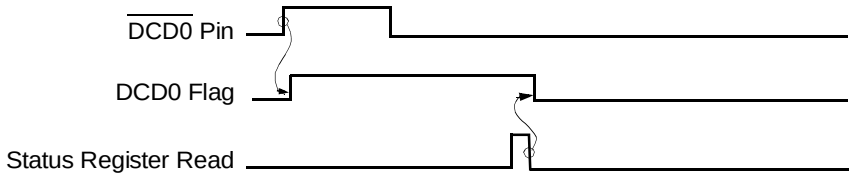

Figure 53. $\overline{DCD0}$ Timing Diagram

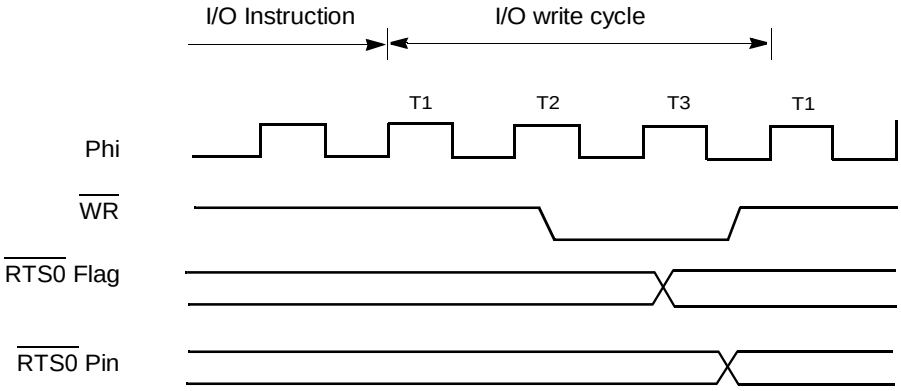

Figure 54. $\overline{\text{RTS0}}$ Timing Diagram

Figure 55 illustrates the ASCI interrupt request generation circuit.

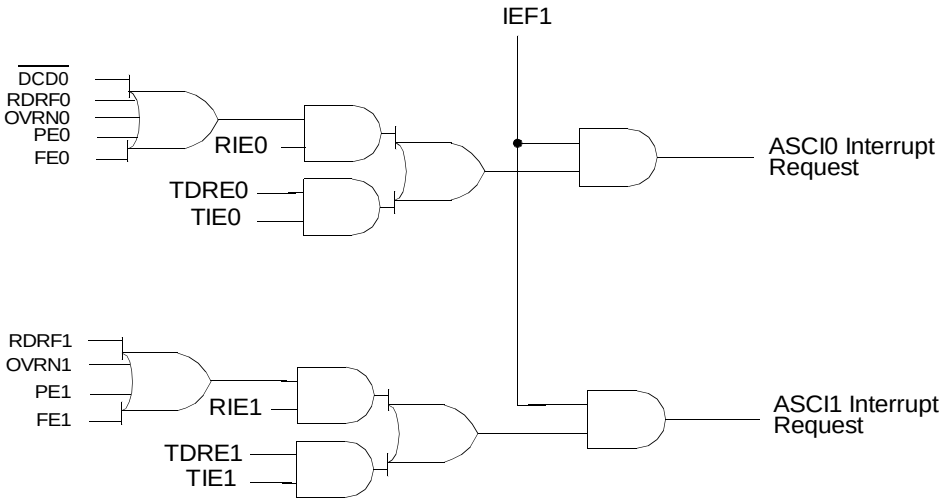

Figure 55. ASCI Interrupt Request Circuit Diagram

ASCI to/from DMAC Operation

Operation of the ASCI with the on-chip DMAC channel 0 requires that the DMAC be correctly configured to use the ASCI flags as DMA request signals.

ASCI and RESET

During RESET, the ASCI status and control registers are initialized as defined in the individual register descriptions.

Receive and Transmit operations are stopped during RESET. However, the contents of the transmit and receive data registers (TDR and RDR) are not changed by RESET.

ASCI Clock

When in external clock input mode, the external clock is directly input to the sampling rate (÷16/÷64) as depicted in Figure 56.

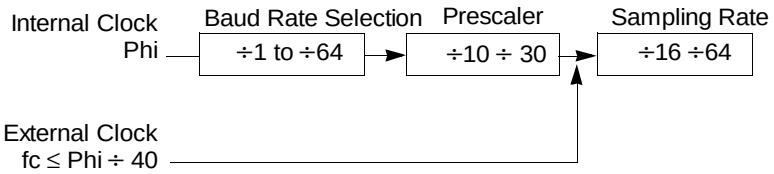

Figure 56. ASCI Clock

Table 19. ASCI Baud Rate Selection

Prescaler		Sampling Rate		Baud Rate				General Divide Ratio	Baud Rate (Example) (BPS)			CKA	
PS	Divide Ratio	DR	Rate	SS2	SS1	SS0	Divide Ratio		ϕ = 6.144 MHz	ϕ = 4.608 MHz	ϕ = 3.072 MHz	I/O	Clock Frequency
0	ϕ ÷ 10	0	16	0	0	0	÷1	ϕ ÷ 160	38400		19200	0	ϕ ÷ 10
				0	0	1	2	320	19200		9600		20
				0	1	0	4	640	9600		4800		40
				0	1	1	8	1280	4800		2400		80
				1	0	0	16	2560	2400		1200		160
				1	0	1	32	5120	1200		600		320
				1	1	0	64	10240	600		300		640
				1	1	1	—	fc ÷ 16	—	—	—	I	fc
		1	64	0	0	0	÷1	0÷640	9600		4800	0	ϕ ÷ 10
				0	0	1	2	1280	4800		2400		20
				0	1	0	4	2560	2400		1200		40
				0	1	1	8	5120	1200		600		80
				1	0	0	16	10240	600		300		160
				1	0	1	32	20480	300		150		320
				1	1	0	64	40960	150		75		640
				1	1	1	—	fc ÷ 64	—	—	—	I	fc

Table 19. ASCI Baud Rate Selection (Continued)

Prescaler		Sampling Rate		Baud Rate				General Divide Ratio	Baud Rate (Example) (BPS)			CKA	
PS	Divide Ratio	DR	Rate	SS2	SS1	SS0	Divide Ratio		ϕ = 6.144 MHz	ϕ = 4.608 MHz	ϕ = 3.072 MHz	I/O	Clock Frequency
1	ϕ ÷ 30	0	16	0	0	0	÷1	ϕ ÷ 480		9600		0	ϕ ÷ 30
				0	0	1	2	960		4800			60
				0	1	0	4	1920		2400			120
				0	1	1	8	3840		1200			240
				1	0	0	16	7680		600			480
				1	0	1	32	15360		300			960
				1	1	0	64	30720		150			1920
				1	1	1	—	fc ÷ 16	—	—	—	I	fc
		1	64	0	0	0	÷1	ϕ ÷ 1920		2400		0	ϕ ÷ 30
				0	0	1	2	3840		1200			60
				0	1	0	4	7680		600			120
				0	1	1	8	15360		300			240
				1	0	0	16	30720		150			480
				1	0	1	32	61440		75			960
				1	1	0	64	122880		37.5			1920
				1	1	1	—	fc ÷ 64	—	—	—	I	fc

Baud Rate Generator (Z8S180/Z8L180-Class Processors Only)

The Z8S180/Z8L180 Baud Rate Generator (BRG) features two modes. The first is the same as in the Z80180. The second is a 16-bit down counter that divides the processor clock by the value in a 16-bit time constant register, and is identical to the DMSCC BRG. This feature

allows a common baud rate of up to 512 Kbps to be selected. The BRG can also be disabled in favor of an external clock on the CKA pin.

The Receiver and Transmitter subsequently divide the output of the BRG (or the signal from the CKA pin) by 1, 16, or 64, under the control of the DR bit in the CNTLB register, and the X1 bit in the ASCI Extension Control REgister. To compute baud rate, use the following formulas:

Where:

BRG mode is bit 3 of the ASEXT register

PS is bit 5 of the CNTLB register

TC is the 16-bit value in the ASCI Time Constant register

If ss2.1.0 = 111, baud rate - f_{CKA}/Clock mode

else if BRG mode baud rate = f_{PHI}/(2*(TC+2)*Clock mode)

else baud rate -f_{PHI}/((10 + 20*PS) * 2^ss*Clock mode)

The TC value for a given baud rate is:

TC = (f_{PHI}/*2*baud rate*Clock mode)) -2

Clock mode depends on bit 4 in ASEXT and bit 3 in CNTLB, as described in Table 20.

Table 20.Clock Mode Bit Values

X1	DR	Clock Mode
0	0	16
0	1	64
1	0	1
1	1	Reserved, do not use

2^ss depends on the three least significant bits of the CNTLB register, as described in Table 21.

Table 21. 2^ss Values

ss2	ss1	ss0	2^ss
0	0	0	1
0	0	1	2
0	1	0	4
0	1	1	8
1	0	0	16
1	0	1	32
1	1	0	64
1	1	1	External Clock from CKA0

The ASCIs require a 50% duty cycle when CKA is used as an input. Minimum High and Low times on CKA0 are typical of most CMOS devices.

RDRF is set, and if enabled, an Rx Interrupt or DMA REquest is generated when the receiver transfers a character from the Rx Shift Register to the RX FIFO. The FIFO provides a margin against overruns. When the is more than one character in the FIFO, and software or a DMA channel reads a character, RDRF either remains set or is cleared and then immediately set again. For example, if a receive interrupt service routine does not real all the characters in the RxFIFO, RDRF and the interrupt request remain asserted.

The Rx DMA request is disabled when any of the error flags PE or FE or OVRN are set, so that software can identify with which character the problem is associated.

If Bit 7, RDRF Interrupt Inhibit, is set to 1, the ASCI does not request a Receive interrupt when its RDRF flag is 1. Set this bit when programming a DMA channel to handle the receive data from an ASCI. The other

causes for an ASCI Receive interrupt (PE, FE, OVRN, and for ASCI0, DCD) continue to request RX interrupt if the RIE bit is 1. The Rx DMA request is inhibited if PE or FE or OVRN is set, so that software can detect where an error occurred. When the RIE bit is 0, as it is after a Reset, RDRF causes an ASCI interrupt if RIE is 1.

Clocked Serial I/O Port (CSI/O)

The Z8X180 includes a simple, high-speed clock, synchronous serial I/O port. The CSI/O includes transmit/receive (half-duplex), fixed 8-bit data, and internal or external data clock selection. High-speed operation (baud rate 200Kbps at fC = 4 MHz) is provided. The CSI/O is ideal for implementing a multiprocessor communication link between multiple Z8X180s. These secondary devices may typically perform a portion of the system I/O processing, (that is, keyboard scan/decode, LDC interface, for instance).

CSI/O Block Diagram

The CSI/O block diagram is illustrated in Figure 57. The CSI/O consists of two registers–the Transmit/Receive Data Register (TRDR) and Control Register (CNTR).

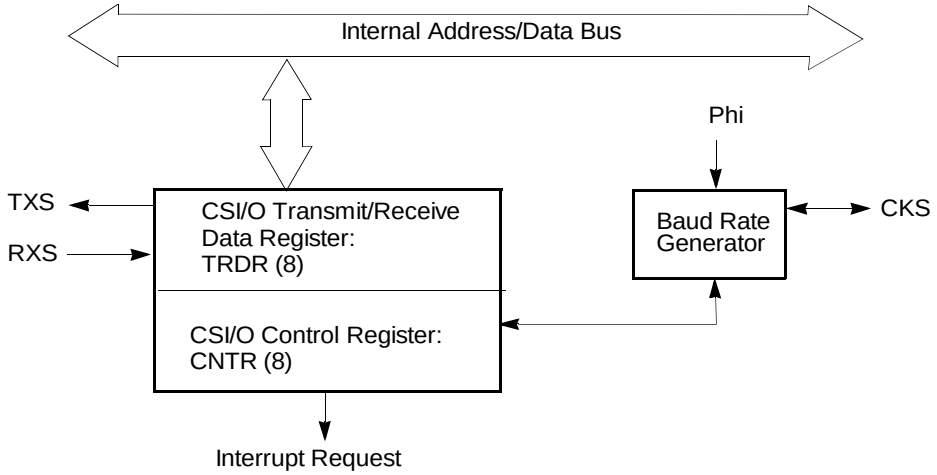

Figure 57. CSI/O Block Diagram

CSI/O Registers Description

CSI/O Control/Status Register (CNTR: I/O Address 0AH)

CNTR is used to monitor CSI/O status, enable and disable the CSI/O, enable and disable interrupt generation, and select the data clock speed and source.

CSI/O Control/Status Register (CNTR: 0AH)

Bit	7	6	5	4	3	2	1	0
Bit/Field	EF	EIE	RE	TE	—	SS2	SS1	SS0
R/W	R	R/W	R/W	R/W		R/W	R/W	R/W
Reset	0	0	0	0		1	1	1

Note: R = Read W = Write X = Indeterminate ? = Not Applicable

Bit Position	Bit/Field	R/W	Value	Description
7	EF	R		**End Flag** — EF is set to 1 by the CSI/O to indicate completion of an 8-bit data transmit or receive operation. If EIE (End Interrupt Enable) bit = 1 when EF is set to 1, a CPU interrupt request is generated. Program access of TRDR only occurs if EF is 1. The CSI/O clears EF to 0 when TRDR is read or written. EF is cleared to 0 during RESET and IOSTOP mode.
6	EIE	R/W		**End Interrupt Enable** — EIE is set to 1 to enable EF = 1 to generate a CPU interrupt request. The interrupt request is inhibited if EIE is reset to 0. EIE is cleared to 0 during RESET.
5	RE	R/W		**Receive Enable** — A CSI/O receive operation is started by setting RE to 1. When RE is set to 1, the data clock is enabled. In internal clock mode, the data clock is output from the CKS pin. In external dock mode, the dock is input on the CKS pin. In either case, data is shifted in on the RXS pin in synchronization with the (internal or external) data clock. After receiving 8 bits of data, the CSI/O automatically clears RE to 0, EF is set to 1, and an interrupt (if enabled by EIE = 1) is generated. RE and TE are never both set to 1 at the same time. RE is cleared to 0 during RESET and ISTOP mode. RXS is multiplexed with $\overline{\text{CTS1}}$ modem control input of ASCI channel 1. In order to enable the RXS function, the CTS1E bit in CNTA1 must be reset to 0.

Bit Position	Bit/Field	R/W	Value	Description
4	TE	R/W		**Transmit Enable** — A CSI/O transmit operation is started by setting TE to 1. When TE is set to 1, the data clock is enabled. When in internal clock mode, the data clock is output from the CKS pin. In external clock mode, the clock is input on the CKS pin. In either case, data is shifted out on the TXS pin synchronous with the (internal or external) data clock. After transmitting 8 bits of data, the CSI/O automatically clears TE to 0, EF is set to 1, and an interrupt (if enabled by EIE = 1) is generated. TE and RE are never both set to 1 at the same time. TE is cleared to 0 during RESET and IOSTOP mode.
2–0	SS2–0	R/W		**Speed Select** — Selects the CSI/O transmit/receive clock source and speed. SS2, SS I and SS0 are all set to 1 during RESET. Table 22 shows CSI/O Baud Rate Selection.

CSI/O Transmit/Receive Data Register (TRDR: I/O Address = 0BH).

TRDR is used for both CSI/O transmission and reception. Thus, the system design must insure that the constraints of half-duplex operation are met (Transmit and receive operation cannot occur simultaneously). For example, if a CSI/O transmission is attempted while the CSI/O is receiving data, the CSI/O does not work.

TRDR is not buffered. Attempting to perform a CSI/O transmit while the previous transmit data is still being shifted out causes the shift data to be immediately updated, thereby corrupting the transmit operation in progress. Similarly, reading TRDR during a transmit or receive must be avoided.

CSI/O Transmit/Receive Register (TRDR: 0BH)

Bit	7	6	5	4	3	2	1	0
Bit/Field	CSI/O Transmit/Receive Data							
R/W	R/W							
Reset	0							
Note: R = Read W = Write X = Indeterminate ? = Not Applicable								

Table 22. CSI/O Baud Rate Selection

SS2	SS1	SS0	Divide Ratio	Baud Rate
0	0	0	÷ 20	(200000)
0	0	1	÷ 40	(100000)
0	1	0	÷ 80	(50000)
0	1	1	÷ 160	(25000)
1	0	0	÷ 320	(12500)
1	0	1	÷ 640	(6250)
1	1	0	÷ 1280	(3125)
1	1	1	External Clock input (less than ÷ 20)	
Note: ( ) indicates the baud rate (BPS) at Phi = 4 MHz.				

After RESET, the CKS pin is configured as an external clock input (SS2, SS1, SS0 = 1). Changing these values causes CKS to become an output pin and the selected clock is output when transmit or receive operations are enabled.

CSI/O Interrupts

The CSI/O interrupt request circuit is shown in Figure 58.

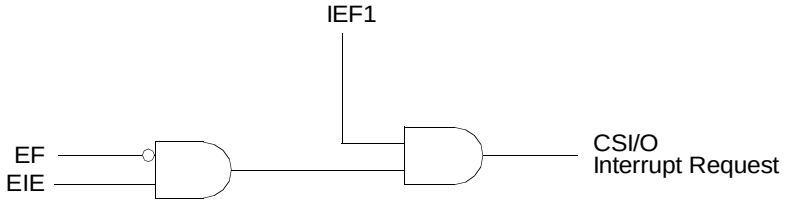

Figure 58. CSI/O Interrupt Request Generation

CSI/O Operation

The CSI/O is operated using status polling or interrupt driven algorithms.

- Transmit–Polling
  a. Poll the TE bit in CNTR until TE = `0`.
  b. Write the transmit data into TRDR.
  c. Set the TE bit in CNTR to `1`.
  d. Repeat steps 1 to 3 for each transmit data byte.
- Transmit–Interrupts
  a. Poll the TE bit in CNTR until TE = `0`.
  b. Write the first transmit data byte into TRDR.
  c. Set the TE and EIE bits in CNTR to `1`.
  d. When the transmit interrupt occurs, write the next transmit data byte into TRDR.
  e. Set the TE bit in CNTR to `1`.
  f. Repeat steps 4 and 5 for each transmit data byte.
- Receive –Polling
  a. Poll the RE bit in CNTR until RE = `0`.
  b. Set the RE bit in CNTR to `1`.

c. Poll the RE bit in CNTR until RE = 0.

d. Read the receive data from TRDR.

e. Repeat steps 2 to 4 for each receive data byte.

- Receive–Interrupts

a. Poll the RE bit in CNTR until RE is 0.

b. Set the RE and EIE bits in CNTR to 1.

c. When the receive interrupt occurs read the receive data from TRDR.

d. Set the RE bit in CNTR to 1.

e. Repeat steps 3 and 4 for each receive data byte.

CSI/O Operation Timing Notes

- Transmitter clocking and receiver sampling timings are different from internal and external clocking modes. Figure 59 to Figure 62 illustrate CSI/O Transmit/Receive Timing.
- The transmitter and receiver is disabled TE and RE = 0) when initializing or changing the baud rate.

CSI/O Operation Notes

- Disable the transmitter and receiver (TE and RE = 0) before initializing or changing the baud rate. When changing the baud rate after completion of transmission or reception, a delay of at least one bit time is required before baud rate modification.
- When RE or TE is cleared to 0 by software, a corresponding receive or transmit operation is immediately terminated. Normally, TE or RE is only cleared to 0 when EF is 1.
- Simultaneous transmission and reception is not possible. Thus, TE and RE are not both 1 at the same time.

CSI/O and RESET

During RESET each bit in the CNTR is initialized as defined in the CNTR register description. CSI/O transmit and receive operations in progress are aborted during RESET. However, the contents of TRDR are not changed.

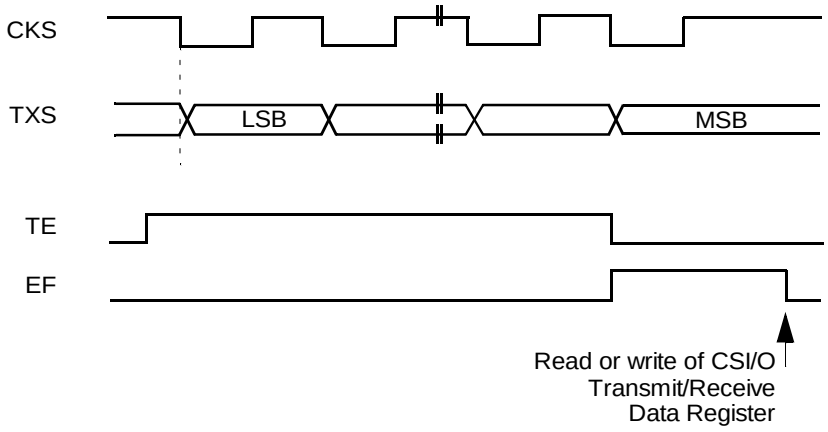

Figure 59. Transmit Timing Diagram–Internal Clock

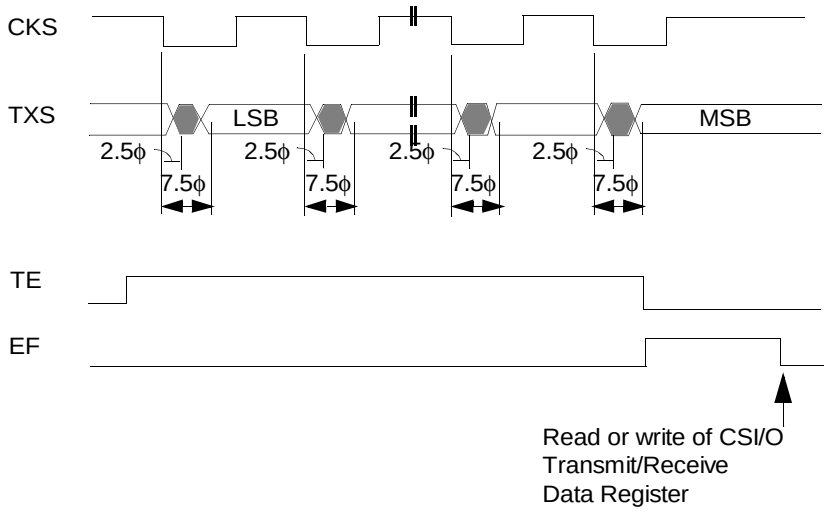

Figure 60. Transmit Timing–External Clock

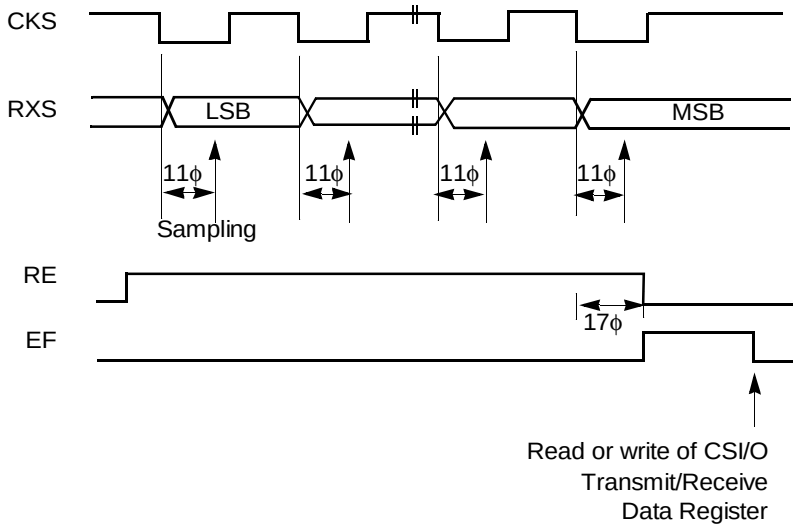

Figure 61. CSI/O Receive Timing–Internal Clock

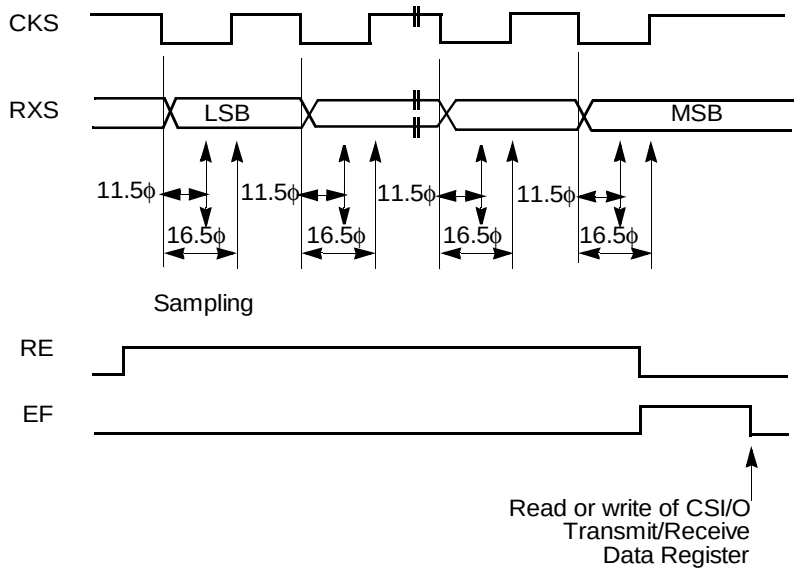

Figure 62. CSI/O Receive Timing–External Clock

Programmable Reload Timer (PRT)

The Z8X180 contains a two channel 16-bit Programmable Reload Timer. Each PRT channel contains a 16-bit down counter and a 16-bit reload register. The down counter is directly read and written and a down counter overflow interrupt can be programmably enabled or disabled. Also, PRT channel 1 features a TOUT output pin (multiplexed with A18) which can be set High, Low, or toggled. Thus, PRT1 can perform programmable output waveform generation.

PRT Block Diagram

The PRT block diagram is depicted in Figure 63. The two channels feature separate timer data and reload registers and a common status/

control register. The PRT input clock for both channels is equal to the system clock divided by 20.

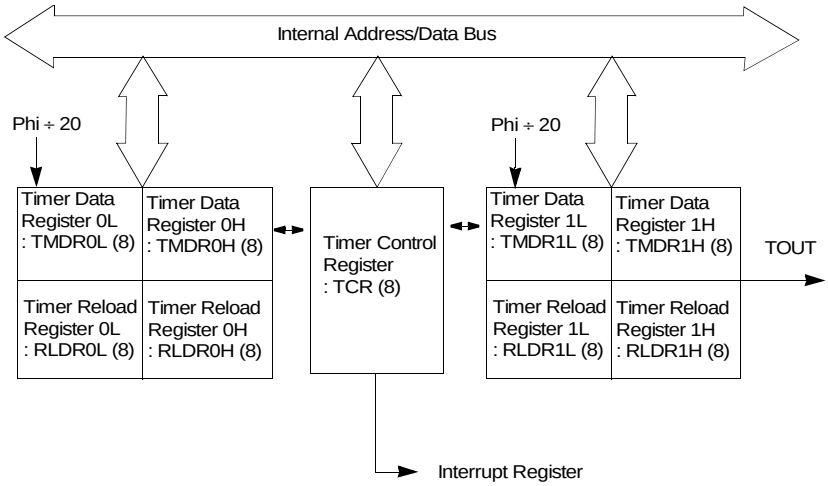

Figure 63. PRT Block Diagram

PRT Register Description

Timer Data Register (TMDR: I/O Address - CH0: 0CH, 0DH; CH1: 15H, 14H). PRT0 and PRT1 each contain 16-bit timer Data Registers (TMDR). TMDR0 and TMDR1 are each accessed as low and high byte registers (TMDR0H, TMDR0L and TMDR1H, TMDR1L). During RESET, TMDR0 and TMDR1 are set to FFFFH.

TMDR is decremented once every twenty clocks. When TMDR counts down to 0, it is automatically reloaded with the value contained in the Reload Register (RLDR).

TMDR is read and written by software using the following procedures. The read procedure uses a PRT internal temporary storage register to

return accurate data without requiring the timer to be stopped. The write procedure requires the PRT to be stopped.

For reading (without stopping the timer), TMDR is read in the order of lower byte - higher byte (TMDRnL, TMDRnH). The lower byte read (TMDRnL) stores the higher byte value in an internal register. The following higher byte read (TMDRnH) accesses this internal register. This procedure insures timer data validity by eliminating the problem of potential 16-bit timer updating between each 8-bit read. Specifically, reading TMDR in higher byte–lower byte order may result in invalid data. Note the implications of TMDR higher byte internal storage for applications which may read only the lower and/or higher bytes. In normal operation all TMDR read routines must access both the lower and higher bytes, in that order. For writing, the TMDR down counting must be inhibited using the TDE (Timer Down Count Enable) bits in the TCR (Timer Control Register). Then, any or both higher and lower bytes of TMDR can be freely written (and read) in any order.

CSI/O Transmit/Receive Data Register (TRDR: I/O Address = 0BH).

TRDR is used for both CSI/O transmission and reception. Thus, the system design must insure that the constraints of half-duplex operation are met (Transmit and receive operation cannot occur simultaneously). For example, if a CSI/O transmission is attempted while the CSI/O is receiving data, the CSI/O does not work.

TRDR is not buffered. Attempting to perform a CSI/O transmit while the previous transmit data is still being shifted out causes the shift data to be immediately updated, thereby corrupting the transmit operation in progress. Similarly, reading TRDR during a transmit or receive must be avoided.

Timer Data Register 0L (TMDR0L: 0CH)

Bit	7	6	5	4	3	2	1	0
Bit/Field	Timer Data							
R/W	R/W							
Reset	0							
Note: R = Read W = Write X = Indeterminate ? = Not Applicable								

Timer Data Register 0H (TMDR0H: 0DH)

Bit	7	6	5	4	3	2	1	0
Bit/Field	Timer Data							
R/W	R/W							
Reset	0							
Note: R = Read W = Write X = Indeterminate ? = Not Applicable								

Timer Reload Register (RLDR: I/O Address = CH0: 0EH, 0FH, CHI, 16H, 17H)

PRT0 and PRT1 each contain 16-bit Timer Reload Registers (RLDR). RLDR0 and RLDR1 are each accessed as low and high byte registers (RLDR0H, RLDR0L and RLDR1H, RLDR1L). During RESET, RLDR0 and RLDR1 are set to `FFFFH`

When the TMDR counts down to `0`, it is automatically reloaded with the contents of RLDR.

Timer Reload Register Channel 0L (RLDR0L: 0EH)

Bit	7	6	5	4	3	2	1	0
Bit/Field	Timer Reload Data							
R/W	R/W							
Reset	0							
Note: R = Read W = Write X = Indeterminate ? = Not Applicable								

Timer Reload Register Channel 0H (RLDR0L: 0FH)

Bit	7	6	5	4	3	2	1	0
Bit/Field	Timer Reload Data							
R/W	R/W							
Reset	0							
Note: R = Read W = Write X = Indeterminate ? = Not Applicable								

Timer Data Register 1L (TMDR1L: 14H)

Bit	7	6	5	4	3	2	1	0
Bit/Field	Timer Data							
R/W	R/W							
Reset	0							
Note: R = Read W = Write X = Indeterminate ? = Not Applicable								

Timer Data Register 1H (TMDR1H: 15H)

Bit	7	6	5	4	3	2	1	0
Bit/Field	Timer Data							
R/W	R/W							
Reset	0							
Note: R = Read W = Write X = Indeterminate ? = Not Applicable								

Timer Reload Register Channel 1L (RLDR1L: 16H)

Bit	7	6	5	4	3	2	1	0
Bit/Field	Timer Reload Data							
R/W	R/W							
Reset	0							

Note: R = Read W = Write X = Indeterminate ? = Not Applicable

Timer Reload Register Channel 1H (RLDR1H: 17H)

Bit	7	6	5	4	3	2	1	0
Bit/Field	Timer Reload Data							
R/W	R/W							
Reset	0							

Note: R = Read W = Write X = Indeterminate ? = Not Applicable

Timer Control Register (TCR)

TCR monitors both channels (PRT0, PRT1) TMDR status. It also controls enabling and disabling of down counting and interrupts along with controlling output pin A18/TOUT for PRT1.

Timer Control Register (TCR: 10H)

Bit	7	6	5	4	3	2	1	0
Bit/Field	TIF1	TIF0	TIE1	TIE0	TOC1	TOC0	TDE1	TDE0
R/W	R	R	R/W	R/W	R/W	R/W	R/W	R/W
Reset	0	0	0	0	0	0	0	0

Note: R = Read W = Write X = Indeterminate ? = Not Applicable

Bit Position	Bit/Field	R/W	Value	Description
7–6	TIF1–0	R		**TIF1: Timer Interrupt Flag** — When TMDR1 decrements to 0, TIF1 is set to 1. This generates an interrupt request if enabled by TIE1 = 1. TIF1 is reset to 0 when TCR is read and the higher or lower byte of TMDR1 is read. During RESET, TIF1 is cleared to 0. When TMDR0 decrements to 0, TIF0 is set to 1. This generates an interrupt request if enabled by TIE0 = 1. TIF0 is reset to 0 when TCR is read and the higher or lower byte of TMDR0 is read. During RESET, TIF0 is cleared to 0.
5–4	TIE1–0	R/W		**Timer Interrupt Enable** — When TIE1 is set to 1, TIF1 = 1 generates a CPU interrupt request. When TIE1 is reset to 0, the interrupt request is inhibited. During RESET, TIE1 is cleared to 0. When TIE0 is set to 1, TIF0 = 1 generates a CPU interrupt request. When TIE0 is reset to 0, the interrupt request is inhibited. During RESET, TIE0 is cleared to 0.
3–2	TOC1–0	R/W		**Timer Output Control** — TOC1, and TOC0 control the output of PRT1 using the multiplexed A18/TOUT pin as shown in Table 23. During RESET, TOC1 and TOC0 are cleared to 0. This selects the address function for A18/TOUT. By programming TOC1 and TOC0 the A18/TOUT pin can be forced HIGH, LOW, or toggled when TMDR1 decrements to 0. Reference Table 23.
1–0	TDE1–0	R/W		**Timer Down Count Enable** — TDE1 and TDE0 enable and disable down counting for TMDR1 and TMDR0 respectively. When TDEn (n = 0, 1) is set to 1, down counting is executed for TMDRn. When TDEn is reset to 0, down counting is stopped and TMDRn is freely read or written. TDE1 and TDE0 are cleared to 0 during RESET and TMDRn does not decrement until TDEn is set to 1.

Table 23. Timer Output Control

TOC1	TOC0	OUTPUT	
0	0	Inhibited	(A18/TOUT pin is selected as an address output function.)
0	1	Toggled	
1	0	0	A18/TOUT pin is selected as a PRT1 output function!
1	1	1	

Figure 64 illustrates timer initialization, count down, and reload timing. Figure 65 depicts timer output (A18/TOUT) timing.

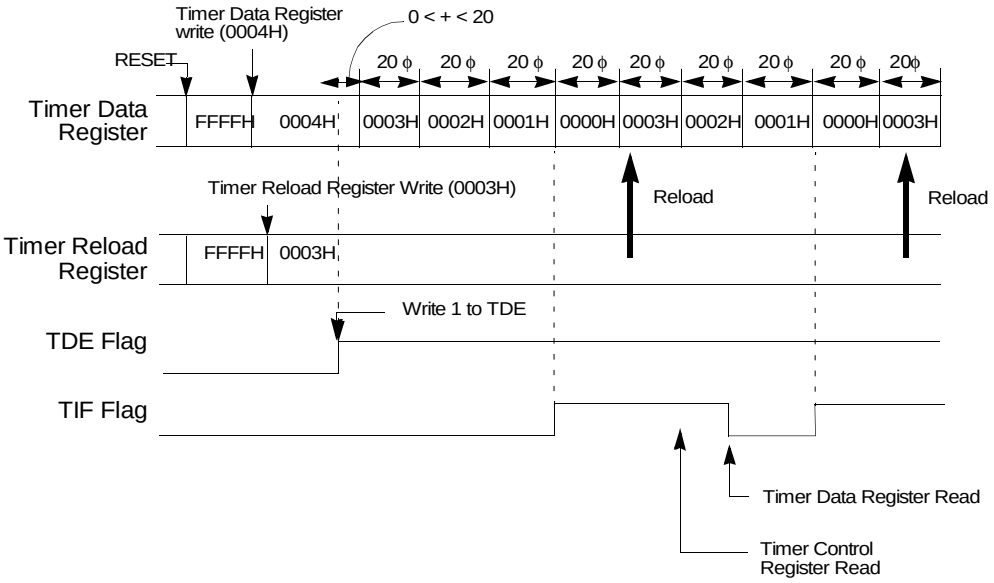

Figure 64. Timer Initialization, Count Down, and Reload Timing Diagram

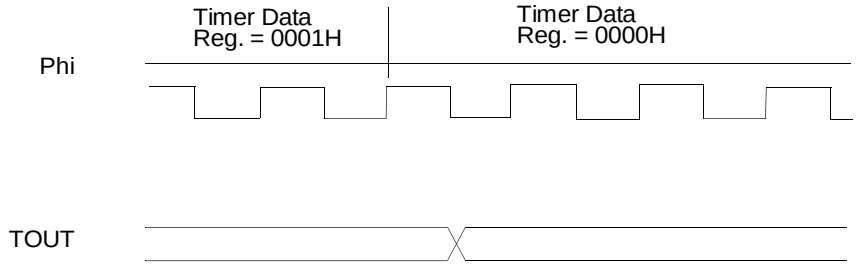

Figure 65. Timer Output Timing Diagram

PRT Interrupts

The PRT interrupt request circuit is illustrated in Figure 66.

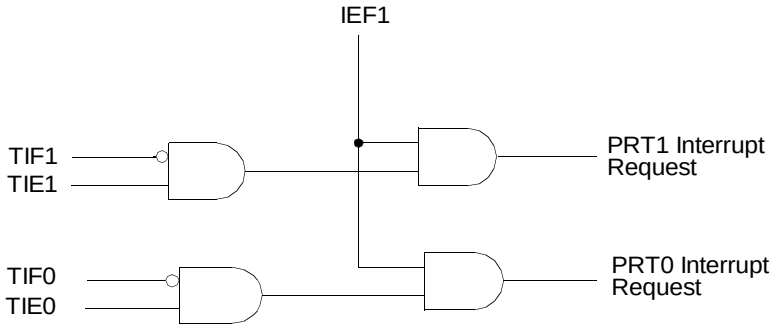

Figure 66. PRT Interrupt Request Generation

PRT and RESET

During RESET, the bits in TCR are initialized as defined in the TCR register description. Down counting is stopped and the TMDR and RLDR registers are initialized to FFFFH. The A18/TOUT pin reverts to the address output function.

PRT Operation Notes

- TMDR data is accurately read without stopping down counting by reading the lower (TMDRnL*) and higher (TMDRnH*) bytes in that order. Also, TMDR is read or written by stopping the down counting.[1]

  Take care to ensure that a timer reload does not occur during or between lower (RLDRnL*) and higher (RLDRnH*) byte writes. This may be guaranteed by system design/timing or by stopping down counting (with TMDR containing a non-zero value) during the RLDR updating. Similarly, in applications where TMDR is written at each TMDR overflow, the system/software design must guarantee that RLDR can be updated before the next overflow occurs. Otherwise, time base inaccuracy occurs.

- During RESET, the multiplexed A18/TOUT pin reverts to the address output. By reprogramming the TOC1 and TOC0 bits, the timer output function for PRT channel 1 is selected. The following paragraph describes the initial state of the TOUT pin after TOC1 and TOC0 are programmed to select the PRT channel 1 timer output function.

  PRT (channel 1) has not counted down to 0.

  If the PRT has not counted down to 0 (timed out), the initial state of TOUT depends on the programmed value in TOC1 and TOC0.

Secondary Bus Interface

E clock Output Timing

The Z8X180 also has a secondary bus interface that allows it to easily interface with other peripheral families.

1. *n = 0, 1

These devices require connection with the Z8X180 synchronous E clock output. The speed (access time) required for the peripheral devices are determined by the Z8X180 clock rate. Table 24, and Figure 67 through Figure 70 define E clock output timing.

Wait States are inserted in Op Code fetch, memory read/write, and I/O read/write cycles which extend the duration of E clock output High. During I/O read/write cycles with no Wait States (only occurs during on-chip I/O register accesses), E does not go High.

Table 24. E Clock Timing in Each Condition

Condition	**Duration of E Clock Output High**	
Op Code Fetch Cycle Memory Read/Write Cycle	T2 rise - T3 fall	(1.5 Phi + nw x Phi)
I/O read Cycle	1st Tw rise - T3 fall	(0.5Phi + nw x Phi)
I/O Write Cycle	1st Tw rise - T3 rise	In_w x Phi)
$\overline{NMI}$ Acknowledge 1st MC	T2 rise - T3 fall	(1.5 Phi)
$\overline{INT0}$ Acknowledge 1st MC	1st Tw rise - T3 fall	(0.50 + nw x Phi)
BUS RELEASE mode SLEEP mode SYSTEM STOP mode	Phi fall - Phi fall	(2 Phi or 1 Phi)
Note: nw = the number of Wait States; MC: Machine Cycle		

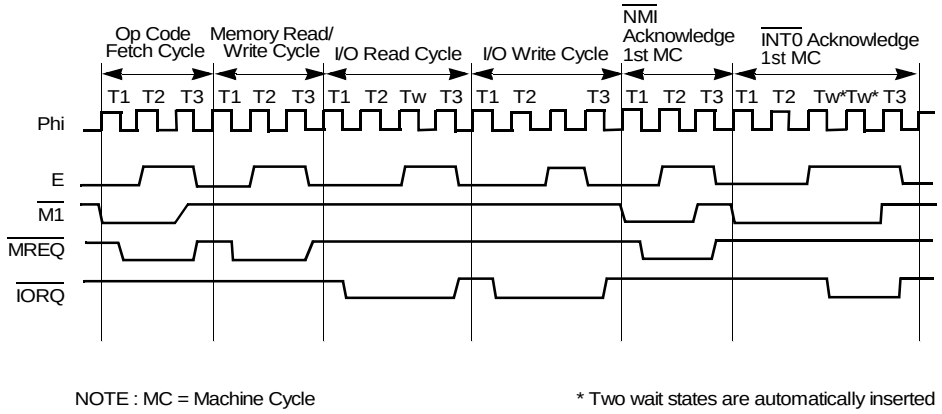

Figure 67. E Clock Timing Diagram (During Read/Write Cycle and Interrupt Acknowledge Cycle

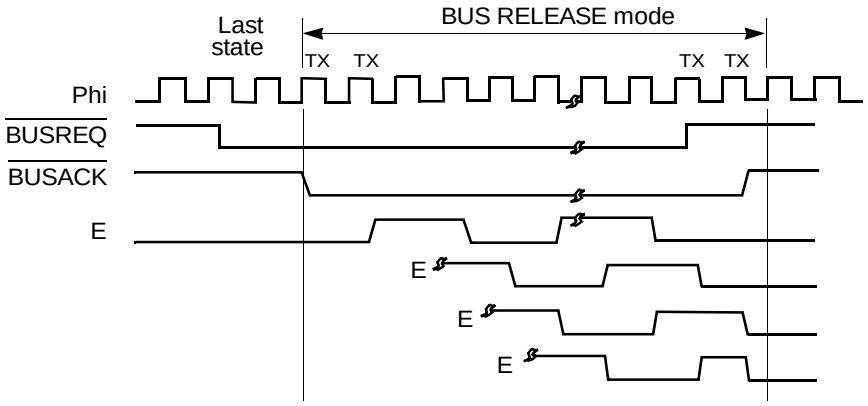

Figure 68. E Clock Timing in BUS RELEASE Mode

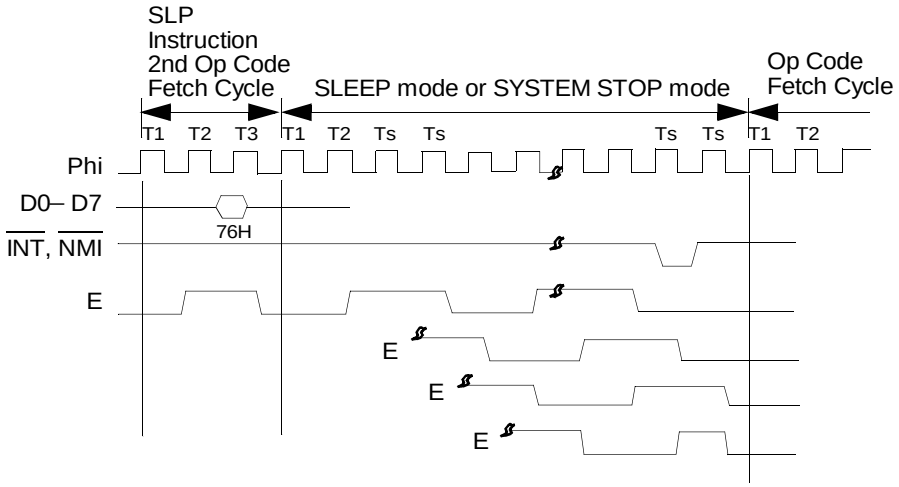

Figure 69. E Clock Timing in SLEEP Mode and SYSTEM STOP Mode

On-Chip Clock Generator

The Z8X180 contains a crystal oscillator and system clock generator. A crystal can be directly connected or an external clock input can be provided. In either case, the system clock is equal to one-half the input clock. For example, a crystal or external clock input of 8 MHz corresponds with a system clock rate of 4 MHz.

Z8S180 and Z8L180-class processors also have the ability to run at X1 and X2 input clock.

Table 25 describes the AT cut crystal characteristics (Co, Rs) and the load capacitance (CL1, CL2) required for various frequencies of Z8X180 operation.

Table 25. Z8X180 Operating Frequencies

Item \ Clock Frequency	4MHz	4MHz < f ≤ 12MHz	12MHz < f ≤ 33MHz
Co	< 7 pF	< 7 pF	< 7 pF
Rs	<60Ω	<60Ω	<60Ω
CL1, CL2	10 to 22 pF ± 10%	10 to 22 pF ± 10%	10 to 22 pF ± 10%

If an external clock input is used instead of a crystal, the waveform (twice the clock rate) must exhibit a 50% ± 10% duty cycle.

Note: The minimum clock input High voltage level is V_{CC} −0.6V. The external clock input is connected to the EXTAL pin, while the XTAL pin is left open. Figure 70 depicts the external clock interface.

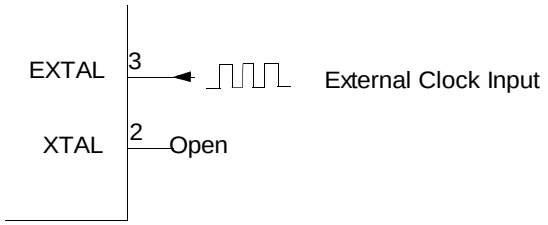

Figure 70. External Clock Interface

Figure 71 illustrates the Z8X180 clock generator circuit while Figures 72 and 72 specify circuit board design rules.

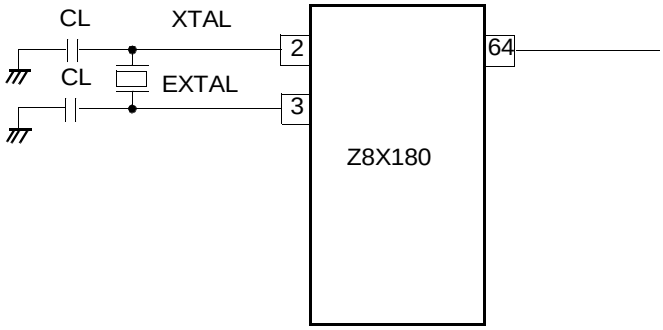

Note: Pin numbers are valid only for DIP configuration

Figure 71. Clock Generator Circuit

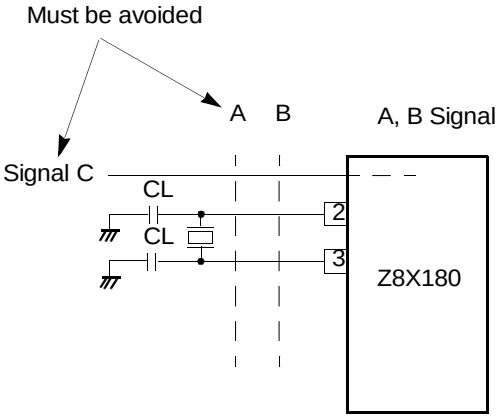

Figure 72. Circuit Board Design Rules

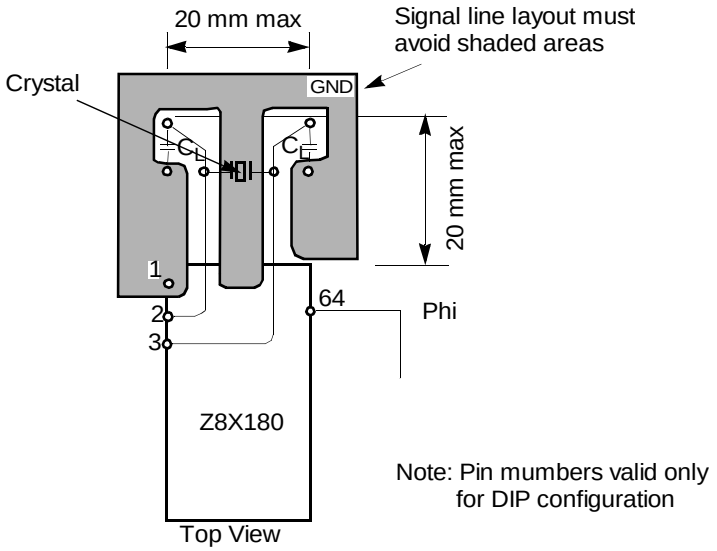

Figure 73. Example of Board Design

Circuit Board design should observe the following parameters.

- Locate the crystal and load capacitors as close to the IC as physically possible to reduce noise.
- Signal lines must not run parallel to the clock oscillator inputs. In particular, the clock input circuitry and the system clock output (pin 64) must be separated as much as possible.
- V_{CC} power lines must be separated from the clock oscillator input circuitry.
- Resistivity between XTAL or EXTAL and the other pins must be greater than 10M ohms.

Signal line layout must avoid areas marked with the shaded area of Figure 73.

Miscellaneous

Free Running Counter (I/O Address = 18H)

If data is written into the free running counter, the interval of DRAM refresh cycle and baud rates for the ASCI and CSI/O are not guaranteed.

In IOSTOP mode, the free running counter continues counting down. It is initialized to FFH during RESET.

Free Running counter (FRC: 18H)

Bit	7	6	5	4	3	2	1	0
Bit/Field	Counting Data							
R/W	R							
Reset	?							

Note: R = Read W = Write X = Indeterminate ? = Not Applicable

Software Architecture

INSTRUCTION SET

The Z80180 is object code-compatible with the Z80 CPU. Refer to the *Z80 CPU Technical Manual* or the *Z80 Assembly Language Programming Manual* for further details.

Table 26. Instruction Set Summary

New Instructions	Operation
SLP	Enter SLEEP mode
MLT	8-bit multiply with 16-bit result
INO g, (m)	Input contents of immediate I/O address
OUT0 (m), g	Output register contents to immediate I/O address
OTIM	Block output - increment
OTIMR	Block output - increment and repeat
OTDM	Block output - decrement
OTDMR	Block output - decrement and repeat
TSTIO m	Non-destructive AND, I/O port, and accumulator
TST g	Non-destructive AND, register, and accumulator
TST m	Non-destructive AND, immediate data, and accumulator
TST (HL)	Non-destructive AND, memory data, and accumulator

SLP - Sleep

The SLP instruction causes the Z80180 to enter the SLEEP low power consumption mode. See page 32 for a complete description of the SLEEP state.

MLT- Multiply

The MLT performs unsigned multiplication on two 8-bit numbers yielding a 16-bit result. MLT may specify BC, DE, HL, or SP registers. The 8-bit operands are loaded into each half of the 16-bit register and the 16-bit result is returned in that register.

OTIM, OTIMR, OTDM, OTDMR - Block I/O

The contents of memory pointed to by HL is output to the I/O address in (C). The memory address (HL) and I/O address (C) are incremented in OTIM and OTIMR and decremented in OTDM and OTDMR, respectively. The B register is decremented. The OTIMR and OTDMR variants repeat the above sequence until register B is decremented to 0. Since the I/O address (C) is automatically incremented or decremented, these instructions are useful for block I/O (such as Z80180 on-chip I/O) initialization. When I/O is accessed, 00H is output in high-order bits of address automatically.

TSTIO m - Test I/O Port

The contents of the I/O port addressed by C are ANDed with immediately specified 8-bit data and the status flags are updated. The I/O port contents are not written (non-destructive AND). When I/O is accessed, `00H` is output in higher bits of address automatically.

TST g - Test Register

Perform an `AND` instruction on the contents of the specified register with the accumulator (A) and the status flags are updated. The accumulator and specified register are not changed (non-destructive `AND`).

TST m - Test Immediate

Perform an `AND` instruction on the contents of the immediately specified 8-bit data with the accumulator (A) and the status flags are updated. The accumulator is not changed (non-destructive `AND`).

TST (HL) - Test Memory

The contents of memory pointed to by HL are ANDed with the accumulator (A) and the status flags are updated. The memory contents and accumulator are not changed (non-destructive AND).

INO g, (m) - Input, Immediate I/O address

The contents of immediately specified 8-bit I/O address are input into the specified register. When I/O is accessed, `00H` is output in high-order bits of the address automatically.

OUTO (m), g - Output, Immediate I/O address

The contents of the specified register are output to the immediately specified 8-bit I/O address. When I/O is accessed, 00H is output in high-order bits of the address automatically.

CPU REGISTERS

The Z80180 CPU registers consist of Register Set GR, Register Set GR' and Special Registers.

The Register Set GR consists of 8-bit Accumulator (A), 8-bit Flag Register (F), and three General Purpose Registers (BC, DE, and HL) which may be treated as 16-bit registers (BC, DE, and HL) or as individual 8-bit registers (B, C, D, E, H, and L) depending on the instruction to be executed. The Register Set GR' is alternate register set of Register Set GR and also contains Accumulator (A'), Flag Register (F') and three General Purpose Registers (BC', DE', and HL'). While the alternate Register Set GR' contents are not directly accessible, the contents can be programmably exchanged at high speed with those of Register Set GR.

The Special Registers consist of 8-bit Interrupt Vector Register (I), 8-bit R Counter (R), two 16-bit Index Registers (IX and IY), 16-bit Stack Pointer (SP), and 16-bit Program Counter (PC)

Figure 74 depicts CPU register configurations.

Register Set GR

Accumulator A	Flag Register F	
B Register	C Register	General Purpose Registers
D Register	E Register	
H Register	L Register	

Register Set GR'

Accumulator A'	Flag Register F'	
B' Register	C' Register	General Purpose Registers
D' Register	E' Register	
H' Register	L' Register	

Special Register

Interrupt Vector Register I	R Counter R
Index Register	IX
Index Register	IY
Stack Pointer	SP
Program Counter	PC

Figure 74. CPU Register Configurations

Accumulator (A, A')

The Accumulator (A) is the primary register used for many arithmetic, logical, and I/O instructions.

Flag Registers (F, F')

The flag registers store status bits (described in the next section) resulting from executed instructions.

General Purpose Registers (BC, BC', DE, DE', HL, HL')

The General Purpose Registers are used for both address and data operation. Depending on the instruction, each half (8 bits) of these registers (B, C, D, E, H, and I) may also be used.

Interrupt Vector Register (I)

For interrupts that require a vector table address to be calculated ($\overline{\text{INT0}}$ Mode 2, $\overline{\text{INT1}}$, $\overline{\text{INT2}}$, and internal interrupts), the Interrupt Vector Register (I) provides the most significant byte of the vector table address. I is cleared to `00H` during reset.

R Counter (R)

The least significant seven bits of the R counter (R) count the number of instructions executed by the Z80180. R increments for each CPU Op Code fetch cycle (each $\overline{\text{M1}}$ cycle). R is cleared to `00H` during reset.

Index Registers (IX, and IY)

The Index Registers are used for both address and data operations. For addressing, the contents of a displacement specified in the instruction are added to or subtracted from the Index Register to determine an effective operand address.

Stack Pointer (SP)

The Stack Pointer (SP) contains the memory address based LIFO stack. SP is cleared to `0000H` during reset.

Program Counter (PC)

The Program Counter (PC) contains the address of the instruction to be executed and is automatically updated after each instruction fetch. PC is cleared to `0000H` during reset.

Flag Register (F)

The Flag Register stores the logical state reflecting the results of instruction execution. The contents of the Flag Register are used to control program flow and instruction operation.

Flag Register

Bit	7	6	5	4	3	2	1	0
Bit/Field	S	Z	Not Used	H	Not Used	P/V	N	C
R/W	R/W	R/W	?	R/W	?	R/W	R/W	R/W
Reset	0	0	?	0	?	0	0	0

R = Read W = Write X = Indeterminate ? = Not Applicable

Bit Position	Bit/Field	R/W	Value	Description
7	S	R/W	0	**Sign.** S stores the state of the most significant bit (bit 7) of the result. This is useful for operations with signed numbers in which values with bit 7 = 1 are interpreted as negative.

Bit Position	Bit/Field	R/W	Value	Description
6	Z	R/W	0	**Zero**. Z is set to 1 when instruction execution produces 0 result. Otherwise, Z is reset to 0.
5	Not Used	?	?	Not used
4	H	R/W	0	**Half Carry**. H is used by the DAA (Decimal Adjust Accumulator) instruction to reflect borrow or carry from the least significant 4 bits and thereby adjust the results of BCD addition and subtraction.
3	Not Used	?	?	Not used.
2	P/V	R/W	0	**P/V: Parity/Overflow**. P/V serves a dual purpose. For logical operations P/V is set to 1 if the number of 1 bit in the result is even and P/V is reset to 0 if the number of 1 in the result is odd. For two complement arithmetic, P/V is set to 1 if the operation produces a result which is outside the allowable range (+ 127 to -128 for 8-bit operations, + 32767 to - 32768 for 16-bit operations).
1	N	R/W	0	**Negative**. N is set to 1 if the last arithmetic instruction was a subtract operation (SUB, DEC, CP, etc.) and N is reset to 0 if the last arithmetic instruction was an addition operation (ADD, INC, etc.).
0	C	R/W	0	**Carry**. C is set to 1 when a carry (addition) or borrow (subtraction) from the most significant bit of the result occurs. C is also affected by Accumulator logic operations such as shifts and rotates.

Addressing Modes

The Z80180 instruction set includes eight addressing modes.

- Implied Register
- Register Direct
- Register Indirect
- Indexed
- Extended
- Immediate
- Relative
- IO

Implied Register (IMP)

Certain Op Codes automatically imply register usage, such as the arithmetic operations that inherently reference the Accumulator, Index Registers, Stack Pointer, and General Purpose Registers.

Register Direct (REG)

Many Op Codes contain bit fields specifying registers used for operation. The exact bit field definitions vary depending on instruction depicted in Figure 75.

8-bit Register

g or g field '	Register
0	B
0 0 1	C
0 1 0	D
0 1 1	E
1 0 0	H
1 0 1	L
1 1 0	—
1 1 1	A

ww field	Register
0 0	B C
0 1	D E
1 0	H L
1 1	S P

xx field	Register
0 0	B C
0 1	D E
1 0	I X
1 1	S P

16-bit Register

zz field	Register
0 0	B C
0 1	D E
1 0	H L
1 1	A F

yy field	Register
0 0	B C
0 1	D E
1 0	I Y
1 1	S P

Suffixed H and L ww,xx,yy,zz (ex. wwH,IXL) indicate upper and lower 8-bit of the 16-bit register respectively.

Figure 75. Register Direct — Bit Field Definitions

Register Indirect (REG)

The memory operand address is contained in one of the 16-bit General Purpose Registers (BC, DE, and HL) as illustrated in Figure 76.

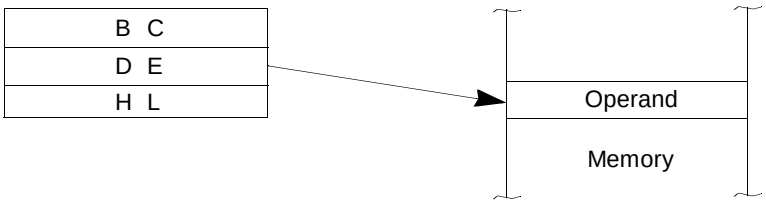

Figure 76. Register Indirect Addressing

Indexed (INDX)

The memory operand address is calculated using the contents of an Index Register (IX or IY) and an 8-bit signed displacement specified in the instruction. Refer to Figure 77

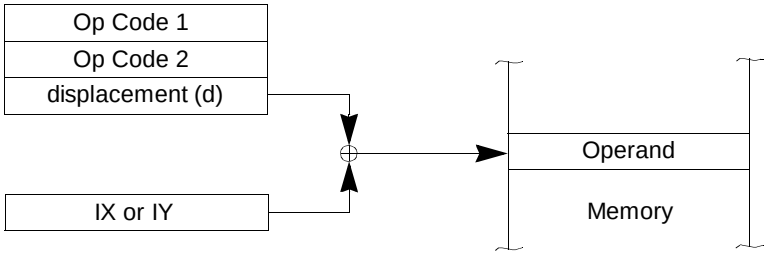

Figure 77. Indexed Addressing

Extended (EXT)

The memory operand address is specified by two bytes contained in the instruction, as depicted in Figure 78.

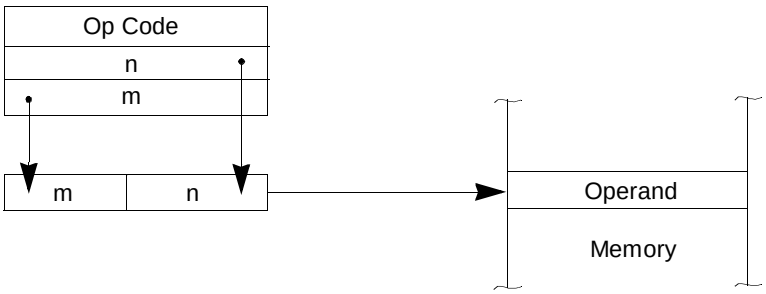

Figure 78. Extended Addressing

Immediate (IMMED)

The memory operands are contained within one or two bytes of the instruction, as depicted in Figure 79.

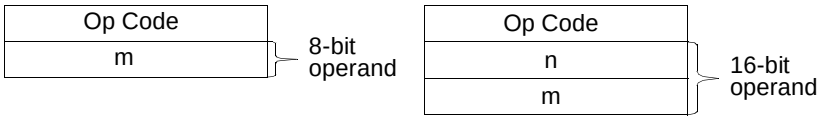

Figure 79. Immediate Addressing

Relative (REL)

Relative addressing mode is only used by the conditional and unconditional branch instructions (refer to Figure 80). The branch displacement (relative to the contents of the program counter) is contained in the instruction.

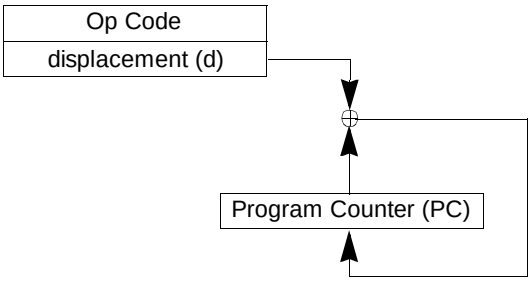

Figure 80. Relative Addressing

IO (I/O)

IO addressing mode is used only by I/O instructions. This mode specifies I/O address ($\overline{IORQ}$ is `0`) and outputs them as follows.

1. An operand is output to A0–A7. The contents of accumulator is output to A8–A15.
2. The contents of Register B is output to A0–A7. The contents of Register C is output to A8–A15.
3. An operand is output to A0–A7. `00H` is output to A8–A15 (useful for internal I/O register access)
4. The contents of Register C is output to A0–A7. `00H` is output to A8–A15 (useful for internal I/O register access).

DC Characteristics

This section describes the DC characteristics of the Z8X180 family and absolute maximum rating for these products.

ABSOLUTE MAXIMUM RATING

Table 27. Absolute Maximum Rating

Item	Symbol	Value	Unit
Supply Voltage	Vcc	- 0.3 ~ + 7.0	V
Input Voltage	Vin	-0.3 ~ Vcc+0.3	V
Operating Temperature	Topr	0 ~ 70	°C
Extended Temperature	Text	-40 ~ 85	°C
Storage Temperature	Tstg	- 55 ~ +150	°C

Permanent IC damage may occur if maximum ratings are exceeded. Normal operation should be under recommended operating conditions. If these conditions are exceeded, it could affect reliability of IC.

Z80180 DC CHARACTERISTICS

V_{CC} = 5V ± 10%, V_{SS} = OV, Ta = 0° to +70°C, unless otherwise noted.)

Table 28. Z80180 DC Characteristics

Symbol	Item	Condition	Minimum	Typical	Maximum	Unit
VIH1	Input High Voltage $\overline{RESET}$, EXTAL $\overline{NMI}$		V_{CC} –0.6	–	V_{CC} +0.3	V
VIH2	Input High Voltage except $\overline{RESET}$, EXTAL $\overline{NMI}$		2.0		V_{CC} +0.3	V
VIL1	Input Low Voltage $\overline{RESET}$, EXTAL $\overline{NMI}$		–0.3		0.6	V
VIL2	Input Low Voltage except $\overline{RESET}$, EXTAL $\overline{NMI}$		–0.3		0.8 Standard 7 TL_{VIL}	V
VOH	Output High Voltage all outputs	IOH = –200 µA IOH = –20 µA	2.4 V_{CC} –1.2	– –	– –	V V
VOL	Output Low Voltage all outputs	IOL = 2.2 mA	–	–	0.45	V
I_{IL}	Input Leakage Current all inputs except XTAL, EXTAL	V_{IN} = 0.5~ V_{CC} –0.5	–	–	1.0	µA
ITL	Three-State Leakage Current		–	–	1.0	µA
ICC	Power Dissipation* (Normal Operation)	f = 6 MHz f = 8 MHz f = 33 MHz	– – –	15 20 25	40 50 60	mA mA mA

Table 28. Z80180 DC Characteristics (Continued)

Symbol	Item	Condition	Minimum	Typical	Maximum	Unit
	Power Dissipation* (SYSTEM STOP mode)	f = 6 MHz f = 8 MHz f = 33 MHz	– – –	3.8 5 6.3	12.5 15.0 17.5	mA mA mA
CP	Pin Capacitance	VIN = 0V, f = 1MHz TA = 25°C	–	–	12	pF
Notes: * VIN min = V_{CC} –1.0V. VIL max = 0.8V (All output terminals are a no load.) $_{VCC}$ = 5.0V						

Z8S180 DC CHARACTERISTICS

V_{CC} = 5V ± 10%, V_{SS} = OV, Ta = 0° to +70°C, unless otherwise noted.

Table 29. Z8S180 DC Characteristics

Symbol	Item	Condition	Minimum	Typical	Maximum	Unit
VIH1	Input High Voltage $\overline{\text{RESET}}$, EXTAL $\overline{\text{NMI}}$		V_{CC} –0.6	–	V_{CC} +0.3	V
VIH2	Input High Voltage except $\overline{\text{RESET}}$, EXTAL $\overline{\text{NMI}}$		2.0		V_{CC} +0.3	V
VIH3	Input High Voltage CKS, CKA0, CKA1		2.4		V_{DD} + 0.3	V
VIL1	Input Low Voltage $\overline{\text{RESET}}$, EXTAL $\overline{\text{NMI}}$		–0.3		0.6	V
VIL2	Input Low Voltage except $\overline{\text{RESET}}$, EXTAL $\overline{\text{NMI}}$		–0.3		0.8	V

Table 29. Z8S180 DC Characteristics (Continued)

Symbol	Item	Condition	Minimum	Typical	Maximum	Unit
VOH1	Output High Voltage All outputs	IOH = –200 µA IOH = –20 µA	2.4 V_{CC} –1.2	– –	– –	V V
VOH2	Output High Voltage Output High Phi	IOH = –200 µA	V_{CC} –0.6			
VOL1	Output Low Voltage All outputs	IOL = 2.2 mA	–	–	0.45	V
VOL2	Output Low Voltage Output Low Phi	IOL = 2.2 mA	–	–	0.45	V
IIL	Input Leakage Current all inputs except XTAL, ETAL	VIN = 0.5 ~ VCC –0.5	–	–	1.0	µA
ITL	Three-State Leakage Current	VIN = 0.5 ~ VCC –0.5	–	–	1.0	µA
ICC	Power Dissipation* (Normal Operation)	f = 10 MHz f = 20 MHz f = 33 MHz	–	15 30 60	– 50 100	mA
	Power Dissipation* (SYSTEM STOP Mode)	f = 10 MHz f = 20 MHz f = 33 MHz	–	1.5 3 5	– 6 9	mA
	Power Dissipation* (IDLE Mode)	f = 20 MHz f = 33 MHz	–	4	10	mA
	Power Dissipation* (STANDBY Mode)	External Oscillator, Internal Clock Stops	–	5	10	µA
CP	Pin Capacitance	VIN = 0V, f = 1MHz TA = 25°C	–	–	12	pF

Notes: * VIN min = V_{CC} –1.0V. VIL max = 0.8V (All output terminals are a no load.)
V_{CC} = 5.0V

Z8L180 DC CHARACTERISTICS

V_{CC} = 3.3V ± 10%, V_{SS} = OV, Ta = 0° to +70°C, unless otherwise noted.)

Table 30. Z8L180 DC Characteristics

Symbol	Item	Condition	Minimum	Typical	Maximum	Unit
VIH1	Input High Voltage $\overline{\text{RESET}}$, EXTAL $\overline{\text{NMI}}$		V_{CC} –0.6	–	V_{CC} +0.3	V
VIH2	Input High Voltage except $\overline{\text{RESET}}$, EXTAL $\overline{\text{NMI}}$		2.0		V_{CC} +0.3	V
VIL1	Input Low Voltage $\overline{\text{RESET}}$, EXTAL $\overline{\text{NMI}}$		–0.3		0.8	V
VIL2	Input Low Voltage except $\overline{\text{RESET}}$, EXTAL $\overline{\text{NMI}}$		–0.3		0.8	V
VOH1	Output High Voltage all outputs	IOH = –200 µA	2.4			V
VOH2	Output High Voltage Output High Phi	IOH = –200 µA	V_{CC} –0.6			V
VOL	Output Low Voltage all outputs	IOL = 4 mA	–	–	0.4	V
VOL2	Output Low Voltage Output Low Phi	IOL = 4 mA	–	–	0.4	V
IIL	Input Leakage Current all inputs except XTAL, EXTAL	VIN = 0.5 ~ VCC –0.5	–	–	1.0	µA
ITL	Three-State Leakage Current	VIN = 0.5 ~ VCC –0.5	–	–	1.0	µA

Table 30. Z8L180 DC Characteristics (Continued)

Symbol	Item	Condition	Minimum	Typical	Maximum	Unit
ICC	Power Dissipation* (Normal Operation)	f = 20 MHz		20	100	mA
	Power Dissipation* (SYSTEM STOP Mode)	f = 20 MHz		2	10	mA
	Power Dissipation* (IDLE Mode)	f = 20 MHz		3	10	mA
	Power Dissipation* (STANDBY Mode)	External Oscillator, Internal Clock Stops		4	10	µA
CP	Pin Capacitance	VIN = 0V, f = 1MHz TA = 25°C	–	–	12	pF
Notes: * VIN min = V_{CC} –1.0V. VIL max = 0.8V (All output terminals are a no load.) V_{CC} = 3.3V						

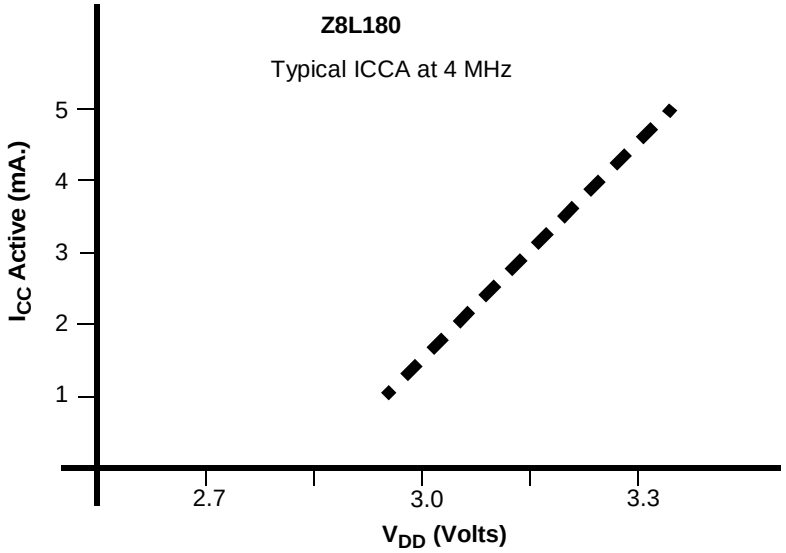
Z8L180
Typical ICCA at 4 MHz
ICC Active (mA.)
5
4
3
2
1
2.7
3.0
3.3
VDD (Volts)

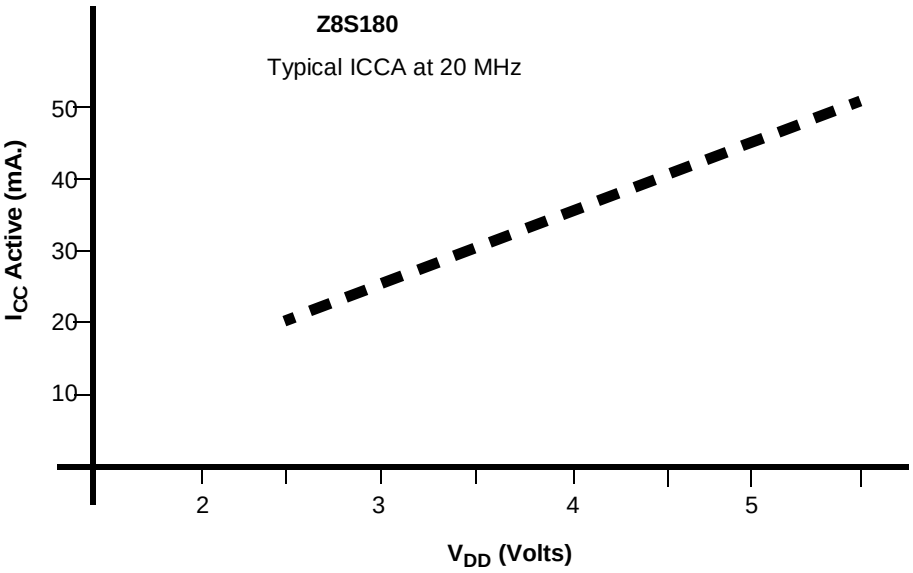
Z8S180
Typical ICCA at 20 MHz
ICC Active (mA.)
50
40
30
20
10
2
3
4
5
VDD (Volts)

AC Characteristics

This section describes the AC characteristics of the Z8X180 family and absolute maximum rating for these products.

AC CHARACTERISTICS—Z8S180

Table 31. Z8S180 AC Characteristics V_{DD} = 5V ±10% or V_{DD} = 3.3V ±10%; 33-MHz Characteristics Apply Only to 5V Operation

			Z8S180—20 MHz		Z8S180—33 MHz		
No.	**Symbol**	**Item**	**Min**	**Max**	**Min**	**Max**	**Unit**
1	t_{CYC}	Clock Cycle Time	50	DC	30	DC	ns
2	t_{CHW}	Clock "H" Pulse Width	15	—	10	—	ns
3	t_{CLW}	Clock "L" Pulse Width	15	—	10	—	ns
4	t_{CF}	Clock Fall Time	—	10	—	5	ns
5	t_{CR}	Clock Rise Time	—	10	—	5	ns
6	t_{AD}	PHI Rise to Address Valid Delay	—	30	—	15	ns
7	t_{AS}	Address Valid to $\overline{MREQ}$ Fall or $\overline{IORQ}$ Fall)	5	—	5	—	ns
8	t_{MED1}	PHI Fall to $\overline{MREQ}$ Fall Delay	—	25	—	15	ns
9	t_{RDD1}	PHI Fall to $\overline{RD}$ Fall Delay $\overline{IOC}$ = 1	—	25	—	15	ns
		PHI Rise to $\overline{RD}$ Rise Delay $\overline{IOC}$ = 0	—	25	—	15	
10	t_{M1D1}	PHI Rise to $\overline{M1}$ Fall Delay	—	35	—	15	ns
11	t_{AH}	Address Hold Time from $\overline{MREQ}$, $\overline{IOREQ}$, $\overline{RD}$, $\overline{WR}$ High	5	—	5	—	ns
12	t_{MED2}	PHI Fall to $\overline{MREQ}$ Rise Delay	—	25	—	15	ns

Table 31. Z8S180 AC Characteristics (Continued) V_{DD} = 5V ±10% or V_{DD} = 3.3V ±10%; 33-MHz Characteristics Apply Only to 5V

			Z8S180—20 MHz		Z8S180—33 MHz		
No.	**Symbol**	**Item**	**Min**	**Max**	**Min**	**Max**	**Unit**
13	t_{RDD2}	PHI Fall to $\overline{RD}$ Rise Delay	—	25	—	15	ns
14	t_{M1D2}	PHI Rise to $\overline{M1}$ Rise Delay	—	40	—	15	ns
15	t_{DRS}	Data Read Set-up Time	10	—	5	—	ns
16	t_{DRH}	Data Read Hold Time	0	—	0	—	ns
17	t_{STD1}	PHI Fall to ST Fall Delay	—	30	—	15	ns
18	t_{STD2}	PHI Fall to ST Rise Delay	—	30	—	15	ns
19	t_{WS}	$\overline{WAIT}$ Set-up Time to PHI Fall	15	—	10	—	ns
20	t_{WH}	$\overline{WAIT}$ Hold Time from PHI Fall	10	—	5	—	ns
21	t_{WDZ}	PHI Rise to Data Float Delay	—	35	—	20	ns
22	t_{WRD1}	PHI Rise to $\overline{WR}$ Fall Delay	—	25	—	15	ns
23	t_{WDD}	PHI Fall to Write Data Delay Time	—	25	—	15	ns
24	t_{WDS}	Write Data Set-up Time to $\overline{WR}$ Fall	10	—	10	—	ns
25	t_{WRD2}	PHI Fall to $\overline{WR}$ Rise Delay	—	25	—	15	ns
26	t_{WRP}	$\overline{WR}$ Pulse Width (Memory Write Cycle)	80	—	45	—	ns
26a		$\overline{WR}$ Pulse Width (I/O Write Cycle)	150	—	70	—	ns
27	t_{WDH}	Write Data Hold Time from $\overline{WR}$ Rise	10	—	5	—	ns
28	t_{IOD1}	PHI Fall to $\overline{IORQ}$ Fall Delay $\overline{IOC}$ = 1	—	25	—	15	ns
		PHI Rise to $\overline{IORQ}$ Fall Delay $\overline{IOC}$ = 0	—	25	—	15	
29	t_{IOD2}	PHI Fall to $\overline{IORQ}$ Rise Delay	—	25	—	15	ns
30	t_{IOD3}	$\overline{M1}$ Fall to $\overline{IORQ}$ Fall Delay	125	—	80	—	ns
31	t_{INTS}	$\overline{INT}$ Set-up Time to PHI Fall	20	—	15	—	ns
32	t_{INTH}	$\overline{INT}$ Hold Time from PHI Fall	10	—	10	—	ns

Table 31. Z8S180 AC Characteristics (Continued) V_{DD} = 5V ±10% or V_{DD} = 3.3V ±10%; 33-MHz Characteristics Apply Only to 5V

			Z8S180—20 MHz		Z8S180—33 MHz		
No.	**Symbol**	**Item**	**Min**	**Max**	**Min**	**Max**	**Unit**
33	t_{NMIW}	$\overline{NMI}$ Pulse Width	35	—	25	—	ns
34	t_{BRS}	$\overline{BUSREQ}$ Set-up Time to PHI Fall	10	—	10	—	ns
35	t_{BRH}	$\overline{BUSREQ}$ Hold Time from PHI Fall	10	—	10		ns
36	t_{BAD1}	PHI Rise to $\overline{BUSACK}$ Fall Delay	—	25	—	15	ns
37	t_{BAD2}	PHI Fall to $\overline{BUSACK}$ Rise Delay	—	25	—	15	ns
38	t_{BZD}	PHI Rise to Bus Floating Delay Time	—	40	—	30	ns
39	t_{MEWH}	$\overline{MREQ}$ Pulse Width (High)	35	—	25	—	ns
40	t_{MEWL}	$\overline{MREQ}$ Pulse Width (Low)	35	—	25	—	ns
41	t_{RFD1}	PHI Rise to $\overline{RFSH}$ Fall Delay	—	20	—	15	ns
42	t_{RFD2}	PHI Rise to $\overline{RFSH}$ Rise Delay	—	20	—	15	ns
43	t_{HAD1}	PHI Rise to $\overline{HALT}$ Fall Delay	—	15	—	15	ns
44	t_{HAD2}	PHI Rise to $\overline{HALT}$ Rise Delay	—	15	—	15	ns
45	t_{DRQS}	$\overline{DREQ1}$ Set-up Time to PHI Rise	20	—	15	—	ns
46	t_{DRQH}	$\overline{DREQ1}$ Hold Time from PHI Rise	20	—	15	—	ns
47	t_{TED1}	PHI Fall to $\overline{TENDi}$ Fall Delay	—	25	—	15	ns
48	t_{TED2}	PHI Fall to $\overline{TENDi}$ Rise Delay	—	25	—	15	ns
49	t_{ED1}	PHI Rise to E Rise Delay	—	30	—	15	ns
50	t_{ED2}	PHI Fall or Rise to E Fall Delay	—	30	—	15	ns
51	P_{WEH}	E Pulse Width (High)	25	—	20	—	ns
52	P_{WEL}	E Pulse Width (Low)	50	—	40	—	ns
53	t_{Er}	Enable Rise Time	—	10	—	10	ns
54	t_{Ef}	Enable Fall Time	—	10	—	10	ns
55	t_{TOD}	PHI Fall to Timer Output Delay	—	75	—	50	ns

Table 31. Z8S180 AC Characteristics (Continued) V_{DD} = 5V ±10% or V_{DD} = 3.3V ±10%; 33-MHz Characteristics Apply Only to 5V

			Z8S180—20 MHz		Z8S180—33 MHz		
No.	**Symbol**	**Item**	**Min**	**Max**	**Min**	**Max**	**Unit**
56	t_{STDI}	CSI/O Transmit Data Delay Time (Internal Clock Operation)	—	2	—	2	tcyc
57	t_{STDE}	CSI/O Transmit Data Delay Time (External Clock Operation)	—	7.5 t_{CYC} +75	—	75 t_{CYC} +60	ns
58	t_{SRSI}	CSI/O Receive Data Set-up Time (Internal Clock Operation)	1	—	1	—	tcyc
59	t_{SRHI}	CSI/O Receive Data Hold Time (Internal Clock Operation)	1	—	1	—	tcyc
60	t_{SRSE}	CSI/O Receive Data Set-up Time (External Clock Operation)	1	—	1	—	tcyc
61	t_{SRHE}	CSI/O Receive Data Hold Time (External Clock Operation)	1	—	1	—	tcyc
62	t_{RES}	$\overline{\text{RESET}}$ Set-up Time to PHI Fall	40	—	25	—	ns
63	t_{REH}	$\overline{\text{RESET}}$ Hold Time from PHI Fall	25	—	15	—	ns
64	t_{OSC}	Oscillator Stabilization Time	—	20	—	20	ns
65	t_{EXR}	External Clock Rise Time (EXTAL)	—	5	—	5	ns
66	t_{EXF}	External Clock Fall Time (EXTAL)	—	5	—	5	ns
67	t_{RR}	$\overline{\text{RESET}}$ Rise Time	—	50	—	50	ms
68	t_{RF}	$\overline{\text{RESET}}$ Fall Time	—	50	—	50	ms
69	t_{IR}	Input Rise Time (except EXTAL, $\overline{\text{RESET}}$)	—	50	—	50	ns
70	t_{IF}	Input Fall Time (except EXTAL, $\overline{\text{RESET}}$)	—	50	—	50	ns

Timing Diagrams

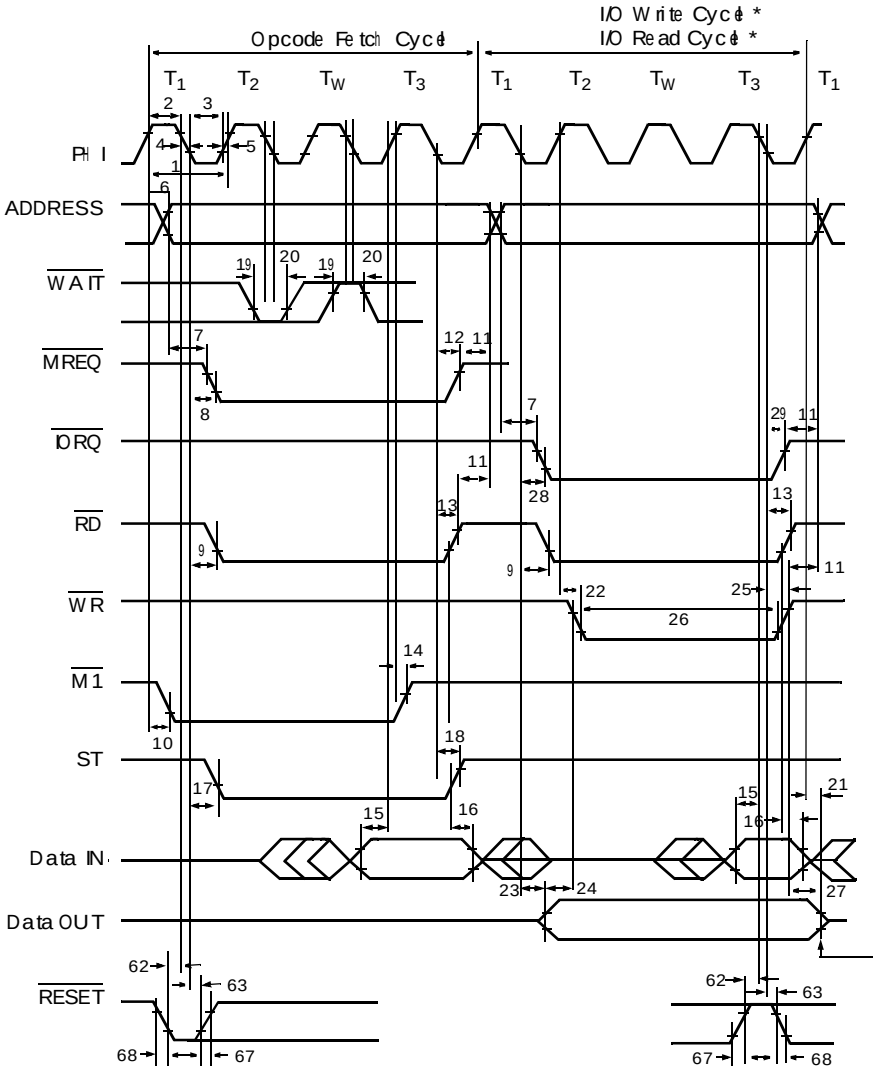

Figure 81. AC Timing Diagram 1

Memory Read/Write Cycle timing is the sam as I/O Read/Write Cycle except there are no automatica Wait States (TW), and MREQ is active instead of IORQ.

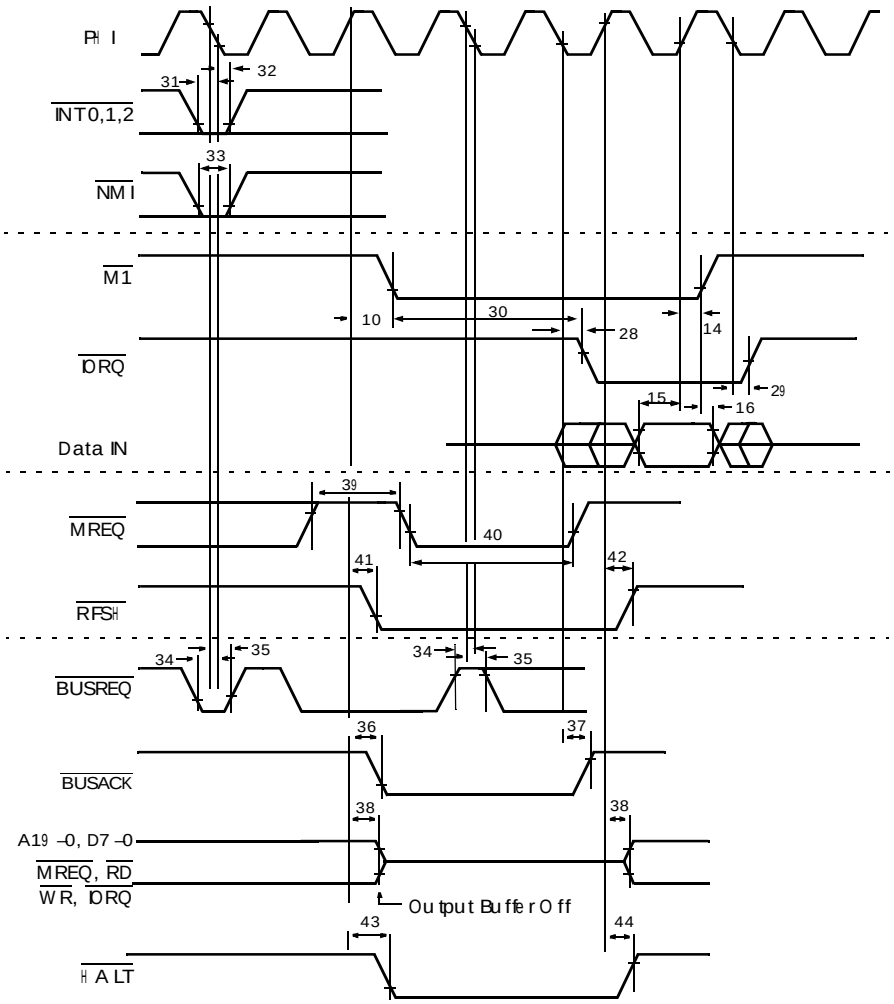

Figure 82. AC Timing Diagram 2

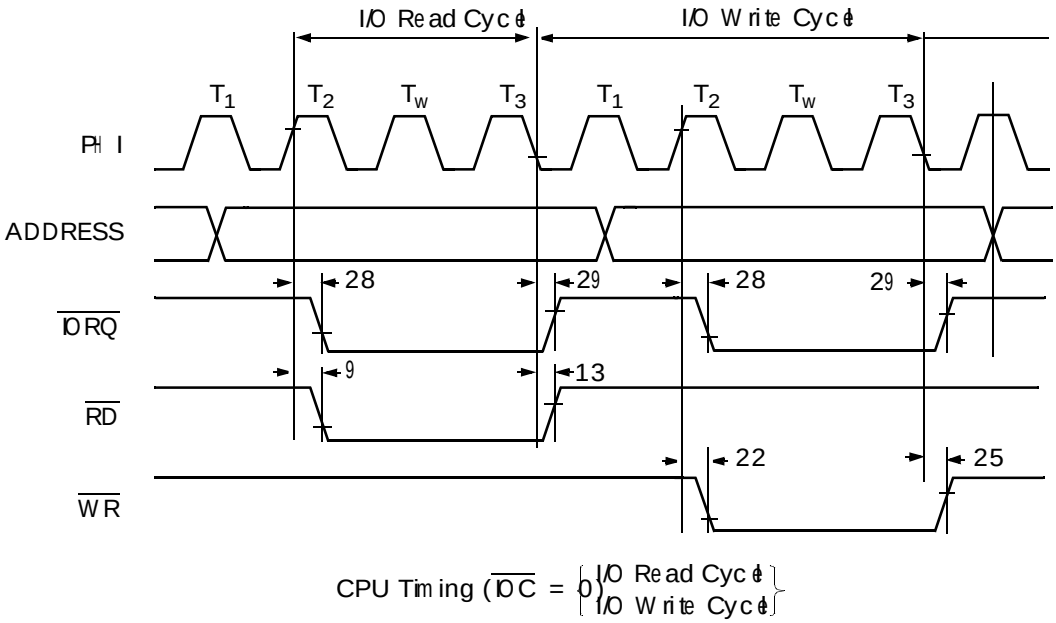

Figure 83. CPU Timing ($\overline{IOC}$ = 0) (I/O Read Cycle, I/O Write Cycle)

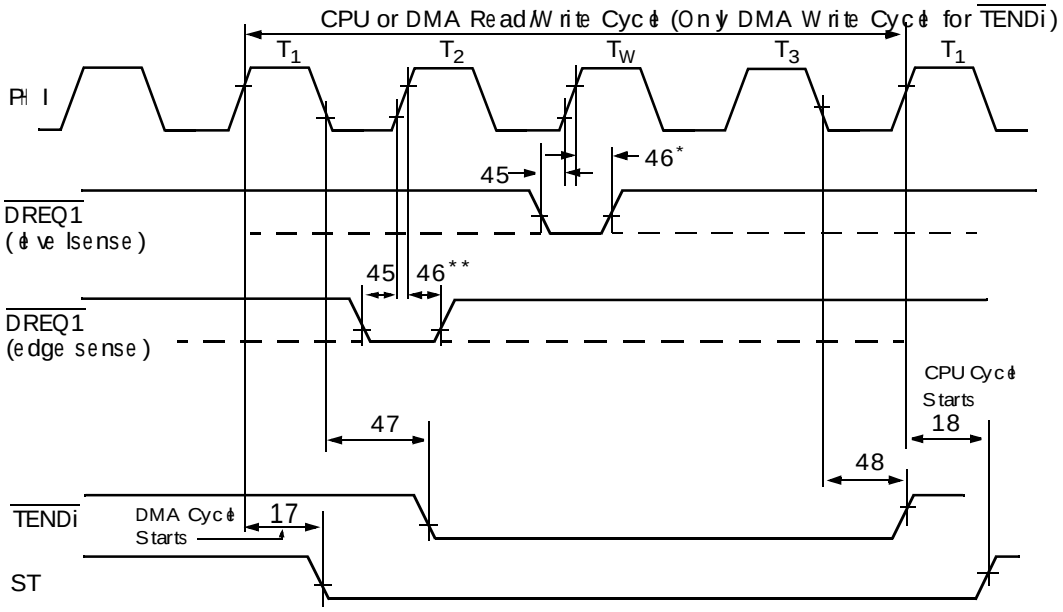

Notes:

*T_{DRQS} and T_{DRQH} are specified for the rising edge of the clock followed by T_3.

**T_{DRQS} and T_{DRQH} are specified for the rising edge of the clock.

Figure 84. DMA Control Signals

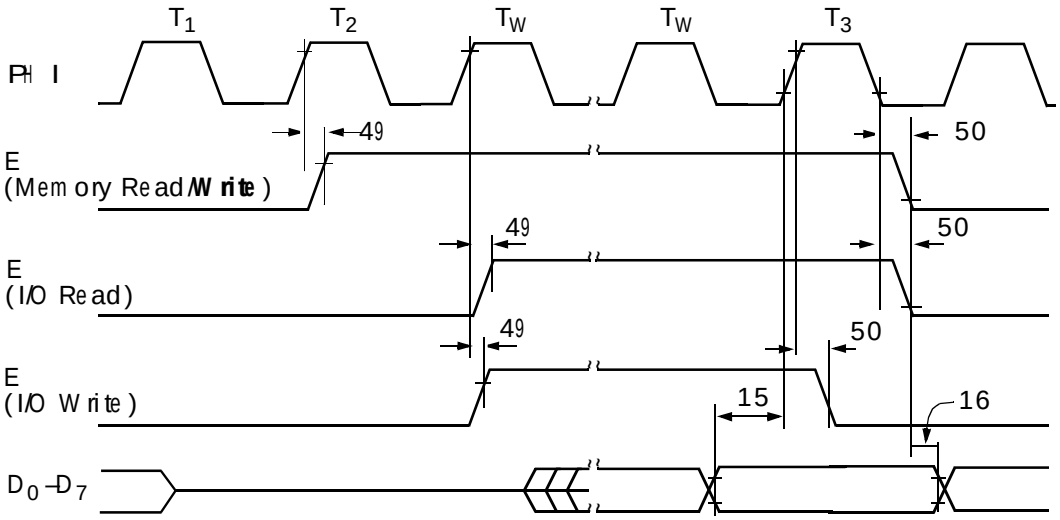

Figure 85. E Clock Timing (Memory R/W Cycle) (I/O R/W Cycle)

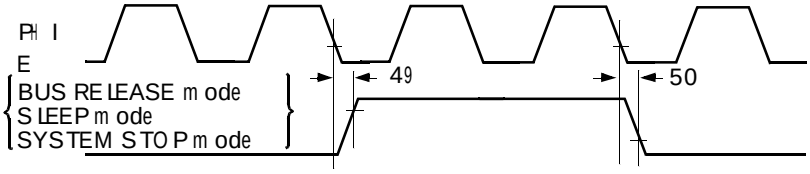

Figure 86. E Clock Timing (BUS RELEASE Mode, SLEEP Mode, and SYSTEM STOP Mode

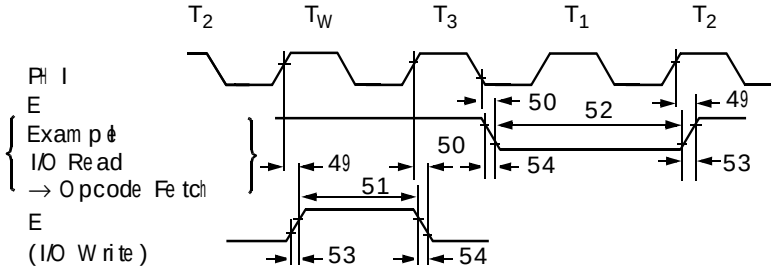

Figure 87. E Clock Timing (Minimum Timing Example of PWEL and PWEH)

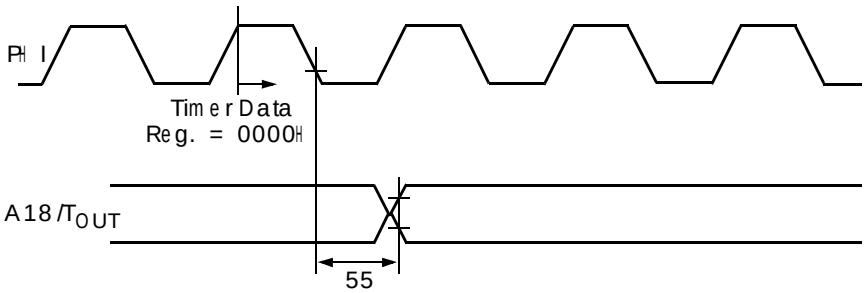

Figure 88. Timer Output Timing

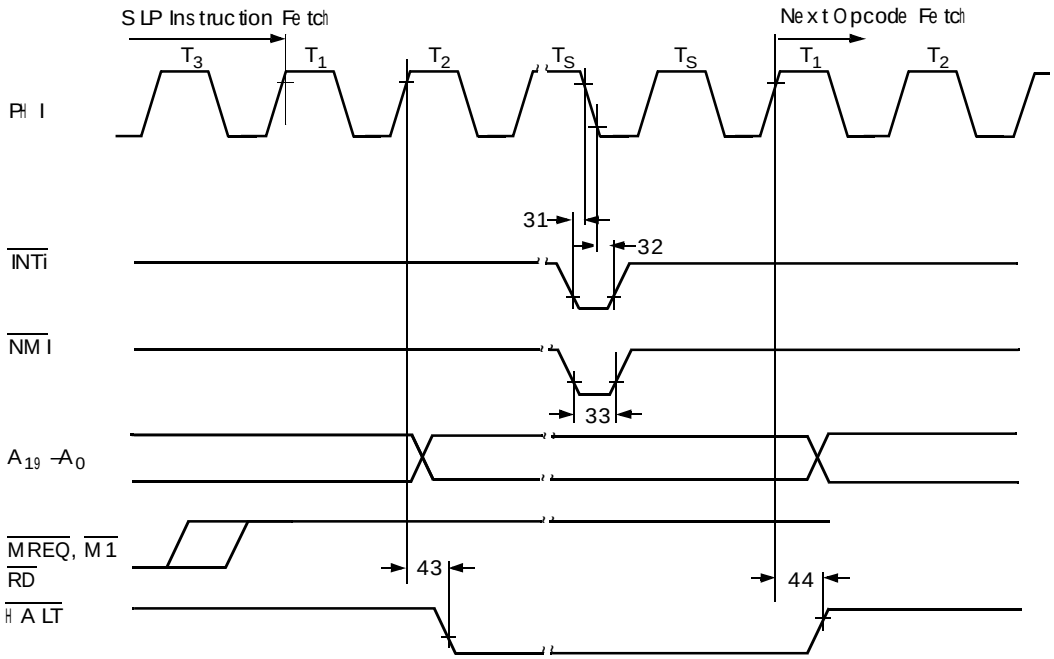

Figure 89. SLP Execution Cycle Timing Diagram

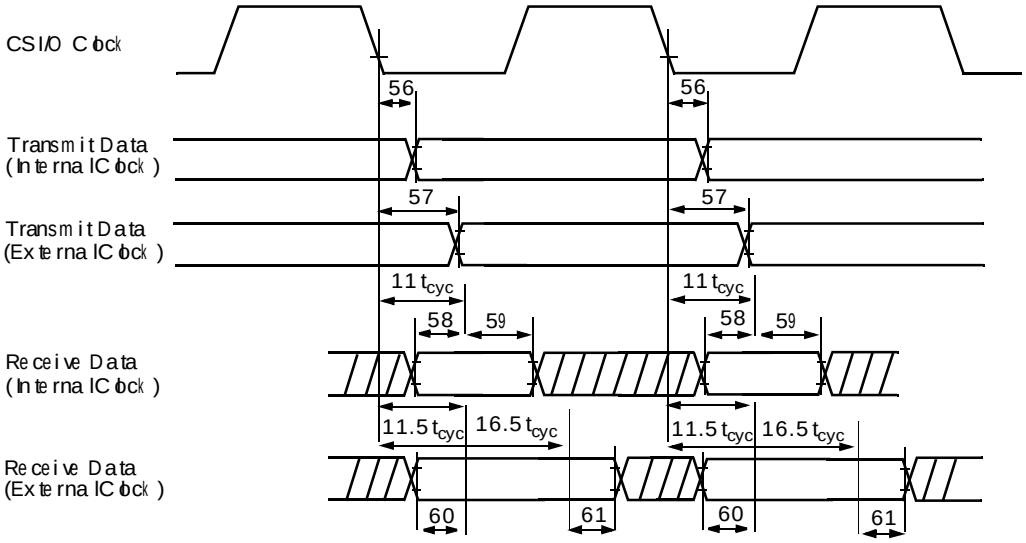

Figure 90. CSI/O Receive/Transmit Timing Diagram

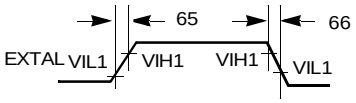

Figure 91. External Clock Rise Time and Fall Time

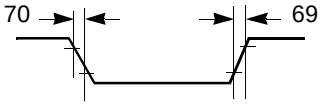

Figure 92. Input Rise Time and Fall Time (Except EXTAL,$\overline{\text{RESET}}$)

STANDARD TEST CONDITIONS

The previous DC Characteristics and Capacitance sections apply to the following standard test conditions, unless otherwise noted. All voltages are referenced to GND (0V). Positive current flows in to the referenced pin.

All AC parameters assume a load capacitance of 100 pF. Add 10 ns delay for each 50 pF increase in load up to a maximum of 200 pF for the data bus and 100 pF for the address and control lines. AC timing measurements are referenced to 1.5 volts (except for CLOCK, which is referenced to the 10% and 90% points).

The Ordering Information section lists temperature ranges and product numbers. Package drawings are in the Package Information section. Refer to the Literature List for additional documentation.

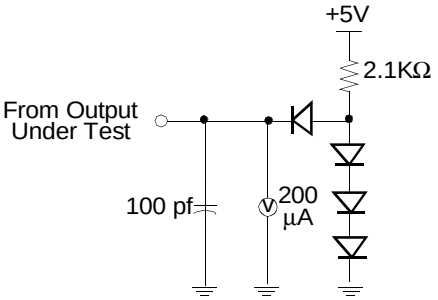

Figure 93. Test Setup

Instruction Set

This section explains the symbols in the instruction set.

REGISTER

g, g', ww, xx, yy, and zz specify a register to be used. g and g' specify an 8-bit register. ww, xx, yy, and zz specify a pair of 8-bit registers. Table 32 describes the correspondence between symbols and registers.

Table 32. Register Values

g,g'	Reg.
000	B
001	C
010	D
011	E
100	H
101	L
111	A

ww	Reg.
00	BC
01	DE
10	HL
11	SP

xx	Reg.
00	BC
01	DE
10	IX
11	SP

yy	Reg.
00	BC
01	DE
10	IY
11	SP

zz	Reg.
00	BC
01	DE
10	HL
11	AF

Note: Suffixed H and L to ww, xx, yy, zz (ex. wwH, IXL) indicate upper and lower 8-bit of the 16-bit register respectively.

BIT

b specifies a bit to be manipulated in the bit manipulation instruction. Table 33 indicates the correspondence between **b** and bits.

Table 33. Bit Values

b	Bit
000	0
001	1
010	2
011	3
100	4
101	5
110	6
111	7

CONDITION

f specifies the condition in program control instructions. Table 34 describes the correspondence between **f** and conditions.

Table 34. Instruction Values

f	Condition	
000	NZ	Nonzero
001	Z	Zero
010	NC	Non Carry
011	C	Carry
100	PO	Parity Odd
101	PE	Parity Even
110	P	Sign Plus
111	M	Sign Minus

RESTART ADDRESS

v specifies a restart address. Table 35 describes the correspondence between **v** and restart addresses.

Table 35. Address Values

v	Address
000	00H
001	08H
010	l0H
011	18H
100	20H
101	28H
110	30H
111	38H

FLAG

The symbols listed in Table 36 indicate the flag conditions.

Table 36. Flag Conditions

- • Not Affected
- - Affected
- x Undefined
- S Set to 1
- R Reset to 0
- P Parity
- V Overflow

MISCELLANEOUS

Table 37 lists the operations mnemonics.

Table 37. Operations Mnemonics

$(\ )_M$	Data in the memory address
$(\ )_I$	Data in the I/O address
m or n	8-bit data
mn	16-bit data
r	8-bit register
R	16-bit register
$b.(\ )_M$	A content of bit b in the memory address
b.gr	A content of bit b in the register gr
d or j	8-bit signed displacement
S	Source
D	Destination
•	AND operation
+	OR operation
⊕	EXCLUSIVE OR operation
**	Added new instructions to Z80

DATA MANIPULATION INSTRUCTIONS

Table 38. Arithmetic and Logical Instructions (8-bit)

Operation Name	Mnemonics	Op Code	Addressing							Bytes	States	Operation	Flags					
													7	6	4	2	1	0
			Immed	Ext	Ind	Reg	Regl	Imp	Rel				S	Z	H	P/V	N	C
ADD	ADD A,g	10 000 g				S		D		1	4	Ar + gr→Ar	-	-	-	V	R	-
	ADD A, (HL)	10 000 110					S	D		1	6	Ar + $(HL)_M$→Ar	-	-	-	V	R	-
	ADD A, m	11 000 110	S					D		2	6	Ar + m→Ar	-	-	-	V	R	-
		<m>																
	ADD A,(IX + d)	11 011 101			S			D		3	14	Ar + $(IX + d)_M$→Ar	-	-	-	V	R	-
		10 000 110																
		<d>																
	ADD A,(IY + d)	11 111 101			S			D		3	14	Ar + $(IY + d))_M$→Ar	-	-	-	V	R	-
		10 000 l10																
		<d>																
ADC	ADC A,g	10 001 g				S		D		1	4	Ar + gr + c→Ar	-	-	-	V	R	-
	ADC A,(HL)	10 001 110					S	D		1	6	Ar + $(HL)_M$ + c→Ar	-	-	-	V	R	-
	ADC A,m	11 001 110	S					D		2	6	Ar + m + c→Ar	-	-	-	V	R	-
		<m>																
	ADC A,(IX + d)	11 011 101			S			D		3	14	Ar + $(IX + d))_M$ + c→Ar	-	-	-	V	R	-
		10 001 110																
		<d>																
	ADC A,(IY + d)	11 111 101			S			D		3	14	Ar + $(IY + d))_M$ + c→Ar	-	-	-	V	R	-
		10 001 110																
		<d>																

Table 38. Arithmetic and Logical Instructions (8-bit) (Continued)

Operation Name	Mnemonics	Op Code	Addressing							Bytes	States	Operation	Flags					
													7	6	4	2	1	0
			Immed	Ext	Ind	Reg	Regl	Imp	Rel				S	Z	H	P/V	N	C
AND	AND g	10 100 g				S		D		1	4	Ar*gr→Ar	-	-	S	P	R	R
	AND (HL)	10 100 110					S	D		1	6	Ar*$(HL)_M$→Ar	-	-	S	P	R	R
	AND m	11 100 110	S					D		2	6	Ar*m→Ar	-	-	S	P	R	R
		<m>																
	AND (IX + d)	11 011 101			S			D		3	14	Ar*$(1X + d))_M$→Ar	-	-	S	P	R	R
		10 100 110																
		<d>																
	AND (IY + d)	11 111 101			S			D		3	14	Ar*(1Y + d)v→Ar	-	-	S	P	R	R
		10 100 110																
		<d>																
Compare	CP g	10 111 g				S		D		1	4	Ar-gr	-	-	-	V	S	-
	CP (HL)	10 111 110					S	D		1	6	Ar-$(HL)_M$	-	-	-	V	S	-
	CP m	11 111 110	S					D		2	6	Ar-m	-	-	-	V	S	-
		<m>																
	CP (IX + d)	11 011 101		S				D		3	14	Ar-$(IX + d))_M$	-	-	-	V	S	-
		10 111 110																
		<d>																
	CP (IY + d)	11 111 101		S				D		3	14	Ar-$(IY + d))_M$	-	-	-	V	S	-
		10 111 110																
		<d>																
Complement	CPL	00 101 111						S/D		1	3	$\overline{Ar}$→Ar	•	•	S	•	S	•

Table 38. Arithmetic and Logical Instructions (8-bit) (Continued)

Operation Name	Mnemonics	Op Code	Addressing							Bytes	States	Operation	Flags					
													7	6	4	2	1	0
			Immed	Ext	Ind	Reg	Regl	Imp	Rel				S	Z	H	P/V	N	C
DEC	DEC g	00 g 101				S/D				1	4	gr-1→gr	-	-	-	V	S	•
	DEC (HL)	00 110 101					S/D			1	10	$(HL)_M$-1→$(HL)_M$	-	-	-	V	S	•
	DEC (IX + d)	11 011 101			S/D					3	18	$(IX + d))_M$-I→	-	-	-	V	S	•
		00 110 101										$(IX + d))_M$						
		<d>																
	DEC (IY + d)	11 111 101			S/D					3	18	$(IY + d)_M$-1→	-	-	-	V	S	•
		00 1101 01										$(IY + d)_M$						
		<d>																
INC	INC g	00 g 100				S/D				1	4	gr + I→gr	-	-	-	V	R	•
	INC (HL)	00 110 100					S/D			1	10	$(HL)_M$ + I→$(HL)_M$	-	-	-	V	R	•
	INC (IX + d)	11 011 101			S/D					3	18	$(IX + d))_M$ + 1→	-	-	-	V	R	•
		00 110 100										(1X + d))$_M$						
		<d>																
	INC (IY + d)	11 111 101			S/D					3	18	(IY + d)v + 1→	-	-	-	V	R	•
		00 110 100										(IY + d)v						
		<d>																
MULT	MLT ww**	11 101 101				S/D				2	17	wwHr→wwLr→wwl	•	•	•	•	•	•
		01 WWI 100																
NEGATE	NEG	11 101 101						S/D		2	6	0-Ar→Ar	-	-	-	Y	S	-
		01 000 100																

Table 38. Arithmetic and Logical Instructions (8-bit) (Continued)

Operation Name	Mnemonics	Op Code	Addressing							Bytes	States	Operation	Flags					
													7	6	4	2	1	0
			Immed	Ext	Ind	Reg	Regl	Imp	Rel				S	Z	H	P/V	N	C
OR	OR g	10 110 g				S		D		1	4	Ar + gr→Ar	-	-	R	P	R	R
	OR (HL)	10 110 110					S	D		1	6	Ar + $(HL)_M$→Ar	-	-	R	P	R	R
	OR m	11 110 110	S					D		2	6	Ar + m→Ar	-	-	R	P	R	R
		<m>																
	OR (IX + d)	11 011 101			S			D		3	14	Ar + $(IX + d)_M$→Ar	-	-	R	P	R	R
		10 110 110																
		<d>																
	OR (IY + d)	11 111 101			S			D		3	14	Ar + $(IY + d)_M$→Ar	-	-	R	P	R	R
		10 110 110																
		<d>																
SUB	SUB g	10 010 g				S		D		1	4	Ar-gr→Ar	-	-	-	V	S	-
	SUB (HL)	10 010 110					S	D		1	6	Ar-$(HL)_M$→Ar	-	-	-	V	S	-
	SUB m	11 010 110	S					D		2	6	Ar-m→Ar	-	-	-	V	S	-
		<m>																
	SUB (IX + d)	11 011 101			S			D		3	14	Ar-$(IX + d)_M$-c→Ar	-	-	-	V	S	-
		10 011 110																
		<d>																
	SUB (IY + d)	11 111 101			S			D		3	14	Ar-$(IY + d)_M$-c→Ar	-	-	-	V	S	-
		10 010 110																
		<d>																

Table 38. Arithmetic and Logical Instructions (8-bit) (Continued)

Operation Name	Mnemonics	Op Code	Addressing							Bytes	States	Operation	Flags					
													7	6	4	2	1	0
			Immed	Ext	Ind	Reg	Regl	Imp	Rel				S	Z	H	P/V	N	C
SUBC	SBC A,g	10 011 g				S		D		1	4	Ar-gr-c→Ar	-	-	-	V	S	-
	SBC A,(HL)	10 011 110					S	D		1	6	Ar-$(HL)_M$-c→Ar	-	-	-	V	S	-
	SBC A,m	11 011 110 <m>	S					D		2	6	Ar-m-c→Ar	-	-	-	V	S	-
	SBC A,(IX + d)	11 011 101 10 011 110 <d>			S			D		3	14	Ar-$(IX + d)_M$-c→Ar	-	-	-	V	S	-
	SBC A,(IY + d)	11 111 101 10 011 110 <d>			S			D		3	14	Ar-$(IY + d)_M$-c→Ar	-	-	-	V	S	-
TEST	TST g**	11 101 101 00 g 100				S				2	7	Ar•gr	-	-	S	P	R	R
	TST {HL)** 00 110 100	11101101					S			2	10	Ar•$(HL)_M$	-	-	S	P	R	R
	TST m**	11 101 101 01 100 100 <m>	S							3	9	Ar•m	-	-	S	P	R	R
XOR	XOR g	10 101 g				S		D		1	4	Ar⊕ + gr→Ar	-	-	R	P	R	R
	XOR (HL)	10 101 110					S	D		1	6	Ar⊕ + $(HL)_M$→Ar	-	-	R	P	R	R
	XOR m	11 101 110 <m>	S					D		2	6	Ar⊕ + m→Ar	-	-	R	P	R	R
	XOR (IX + d)	11 011 101 10 101 110 <d>			S			D		3	14	Ar⊕ + $(IX + d))_M$→Ar	-	-	R	P	R	R

Table 38. Arithmetic and Logical Instructions (8-bit) (Continued)

Operation Name	Mnemonics	Op Code	Addressing							Bytes	States	Operation	Flags					
													7	6	4	2	1	0
			Immed	Ext	Ind	Reg	Regl	Imp	Rel				S	Z	H	P/V	N	C
	XOR (IY + d)	11 111 101			S			D		3	14	$Ar \oplus + (IY + d))_M \rightarrow Ar$	-	-	R	P	R	R
		10 101 110																
		<d>																

Table 39. Rotate and Shift Instructions

Operation Name	Mnemonics	Op Code	Addressing							Bytes	States	Operation	Flags					
													7	6	4	2	1	0
			Immed	Ext	Ind	Reg	Regi	Imp	Rel				S	Z	H	P/V	N	C
Rotate and Shift Data	RL A	00 010 1111						S/D		1	3		•	•	R	•	R	-
	RL g	11 001 011				S/D				2	7		-	-	R	P	R	-
		00 010 g																
	RL (HL)	11 001 011					S/D			2	13		-	-	R	P	R	-
		00 010 110																
	RL (IX + d)	11 011 101			S/D					4	19		-	-	R	P	R	-
		11 001 011																
		<d>																
		00 010 110																
	RL (IY + d)	11 111 101			S/D					4	19		-	-	R	P	R	-
		11 001 011																
		<d>																
		00 010 110																
	RLC A	00 000 111						S/D		1	3		•	•	R	•	R	-
	RLC g	11 001 011				S/D				2	7		-	-	R	P	R	-
		00 000 g																
	RLC (HL)	11 001 011					S/D			2	13		-	-	R	P	R	-
		00 000 110																

Table 39. Rotate and Shift Instructions (Continued)

Operation Name	Mnemonics	Op Code	Addressing							Bytes	States	Operation	Flags					
													7	6	4	2	1	0
			Immed	Ext	Ind	Reg	Regi	Imp	Rel				S	Z	H	P/V	N	C
	RLC (IX + d)	11 011 101			S/D					4	19		-	-	R	P	R	-
		11 001 011																
		<d>																
		00 000 110																
	RLC (IY + d)	11 111 101			S/D					4	19		-	-	R	P	R	-
		11 001 011																
		<d>																
		00 000 110																
	RLD	11 101 101						S/D		2	16	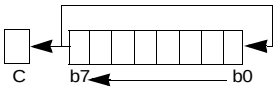	-	-	R	P	R	•
		01 101 111																
	RRA	00 011 111						S/D		1	3		•	•	R	•	R	-
	RRg	11 001 011				S/D				2	7		-	-	R	P	R	-
		00 011 g																
	RR (HL)	11 001 011					S/D			2	13		-	-	R	P	R	-
		00 011 110																
	RR (IX + d)	11 011 101			S/D					4	19		-	-	R	P	R	-
		11 001 011																
		<d>																
		00 011 110										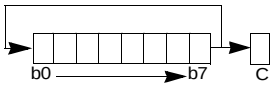						
	RR (IY + d)	11 111 101			S/D					4	19		-	-	R	P	R	-
		11 001 011																
		<d>																
		00 011 110																
	RRCA	00 001 111						S/D		1	3		•	•	R	•	R	-
	RRC g	11 001 011				S/D				2	7		-	-	R	P	R	-
		00 001 g																
	RRC (HL)	11 001 011					S/D			2	13		-	-	R	P	R	-
		00 001 110																
	RRC (IX + d)	11 011 101			S/D					4	19		-	-	R	P	R	-
		11 001 011																
		<d>																
		00 001 110																
	RRC (IY + d)	11 111 101			S/D					4	19		-	-	R	P	R	-

Table 39. Rotate and Shift Instructions (Continued)

Operation Name	Mnemonics	Op Code	Addressing: Immed	Ext	Ind	Reg	Regi	Imp	Rel	Bytes	States	Operation	Flags 7: S	6: Z	4: H	2: P/V	1: N	0: C
		11 001 011																
		<d>																
		00 001 110																
	RRD	11 101 101						S/D		2	16		-	-	R	P	R	•
		01 100 111																
	SLA g	11 001 011				S/D				2	7		-	-	R	P	R	-
		00 100 g																
	SLA (HL)	11 001 011					S/D			2	13		-	-	R	P	R	-
		00 100 110																
	SLA (IX + d)	11 011 101			S/D					4	19		-	-	R	P	R	-
		11 001 011																
		<d>																
		00 100 110																
	SLA (IY + d)	11 111 101			S/D					4	19		-	-	R	P	R	-
		11 001 011																
		<d>																
		00 100 110																
	SRA g	11 001 011				S/D				2	7		-	-	R	P	R	-
		00 101 g																
	SRA (HL)	11 001 011					S/D			2	13		-	-	R	P	R	-
		00 101 110																
	SRA (IX + d)	11 011 101			S/D					4	19		-	-	R	P	R	-
		11 001 011																
		<d>																
		00 101 110																
	SRA (IY + d)	11 111 101			S/D					4	19		-	-	R	P	R	-
		11 001 011																
		<d>																
		00 101 110																
	SRL g	11 001 011				S/D				2	7		-	-	R	P	R	-
		00 111 g																

Table 39. Rotate and Shift Instructions (Continued)

Operation Name	Mnemonics	Op Code	Addressing							Bytes	States	Operation	Flags					
			Immed	Ext	Ind	Reg	Regi	Imp	Rel				7	6	4	2	1	0
													S	Z	H	P/V	N	C
	SRL (HL)	11 001 011				S/D				2	3		-	-	R	P	R	-
		00 111 110																
	SRL (IX + d)	11 011 101			S/D					4	19		-	-	R	P	R	-
		11 001 011																
		<d>																
		00 111 110																
	SRL (IY + d)	11 111 101			S/D					4	19		-	-	R	P	R	-
		11 001 011																
		<d>																
		00 111 110																
Bit Set	SET b,g	11 001 011				S/D				2	7	1→b•gr	•	•	•	•	•	•
		11 b g																
	SET b,(HL)	11 001 011					S/D			2	13	$1 \rightarrow b \bullet (HL)_M$	•	•	•	•	•	•
		11 b 110																
	SET b,(IX + d)	11 011 101			S/D					4	19	$1 \rightarrow b \bullet (IX + d)_M$	•	•	•	•	•	•
		11 001 011																
		<d>																
		11 b 110																
	SET b,(IY + d)	11 111 101			S/D					4	19	$I \rightarrow b \bullet (IY + d)_M$	•	•	•	•	•	•
		11 001 011																
		<d>																
		11 b 110																
Bit Reset	RES b,g	11 001 011				S/D				2	7	0 →b•gr	•	•	•	•	•	•
		10 b g																
	RES b,(HL)	11 001 011					S/D			2	13	$0 \rightarrow 6*b \bullet (HL)_M$	•	•	•	•	•	•
		10 b 110																
	RES b,(IX + d)	11 011 101			S/D					4	19	$0 \rightarrow \bullet b \bullet (IX + d)_M$	•	•	•	•	•	•
		11 001 011																
		<d>																
		10 b 110																

Table 39. Rotate and Shift Instructions (Continued)

Operation Name	Mnemonics	Op Code	Addressing							Bytes	States	Operation	Flags					
													7	6	4	2	1	0
			Immed	Ext	Ind	Reg	Regi	Imp	Rel				S	Z	H	P/V	N	C
Bit Reset	RES b,(IY + d)	11 011 101			S/D					4	19	$0 \rightarrow b \bullet (IY + d)_M$	•	•	•	•	•	•
		11 001 01l																
		<d>																
		10 b 110																
Bit Test	BIT b, g	11 001 011				S				2	6	$\overline{b} \bullet \overline{gr} \rightarrow z$	X	-	S	X	R	•
		01bg																
	BIT b,(HL)	11 001 011					S			2	9	$\overline{b} \bullet \overline{(HL)_M} \rightarrow z$	X	-	S	X	R	•
		01 b 110																
	BIT b,(IX + d)	11 011 101			S					4	15	$\overline{b} \bullet \overline{(IX + d)_M} \rightarrow z$	X	-	S	X	R	•
		11 001 011																
		<d>																
		01 b 110																
	BIT b,(IY + d)	11 111 101			S					4	15	$\overline{b} \bullet \overline{(IY + d)_M} \rightarrow z$	X	-	S	X	R	•
		11 001 011																
		<d>																
		01 b 110																

Table 40. Arithmetic Instructions (16-bit)

Operation Name	Mnemonics	Op Code	Addressing							Bytes	States	Operation	Flags					
													7	6	4	2	1	0
			Immed	Ext	Ind	Reg	Regl	Imp	Rel				S	Z	H	P/V	N	C
ADD	ADD HL,ww	00 ww1 001				S		D		1	7	$HL_R + ww_R \rightarrow HL_R$	•	•	X	•	R	-
	ADD IX,xx	11 011 101 00 xx1 001				S		D		2	10	$IX_R + xx_R \rightarrow *IX_R$	•	•	X	•	R	-
	ADD IY,yy	11 111 101 00 yy1 001				S		D		2	10	$IY_R + yy_R \rightarrow IY_R$	•	•	X	•	R	-
ADC	ADC HL,ww	11 101 101 01 ww1 010				S		D		2	10	$HL_R + ww_R + c \rightarrow HL_R$	-	-	X	V	R	-
DEC	DEC ww	00 ww1 011				S/D				1	4	$ww_R - 1 \rightarrow \bullet ww_R$	•	•	•	•	•	•
	DEC IX	11 011 101 00 101 011						S/D		2	7	$1X_R - 1 \rightarrow IX_R$	•	•	•	•	•	•
	DEC IY	11 111 101 00 101 011						S/D		2	7	$1Y_R - 1 \rightarrow IY_R$	•	•	•	•	•	•
INC	INC ww	00 ww 0011				S/D				1	4	$ww_R + 1 \rightarrow ww_R$	•	•	•	•	•	•
	INC IX	11 011 101 00 100 011						S/D		2	7	$1X_R + 1 \rightarrow IX_R$	•	•	•	•	•	•
	INC IY	11 111 101 00 100 011						S/D		2	7	$1Y_R + 1 \rightarrow IY_R$	•	•	•	•	•	•
SBC	SBC HL ww	11 101 101 01 ww0 010				S		D		2	10	$HL_R - ww_R - c \rightarrow HL_R$	-	-	X	V	S	-

DATA TRANSFER INSTRUCTIONS

Table 41. 8-Bit Load

Operation Name	Mnemonics	Op Code	Addressing							Bytes	States	Operation	Flags					
													7	6	4	2	1	0
			Immed	Ext	Ind	Reg	Regl	Imp	Rel				S	Z	H	P/V	N	C
Load 8-Bit Data	LD A,I	11 101 101						S/D		2	6	1r→Ar	-	-	R	IEF2	R	•
		01 010 111																
	LD A,R	11 101 101						S/D		2	6	Rr→Ar	-	-	R	IEF2	R	•
		01 011 111																
	LD A,(BC)	00 001 010					S	D		1	6	$(BC)_M$→Ar	•	•	•	•	•	•
	LD A,(DE)	00 011 010					S	D		1	6	$(DE)_M$→Ar	•	•	•	•	•	•
	LD A,(mn)	00 111 010		S				D		3	12	$(mn)_M$→Ar	•	•	•	•	•	•
		<n>																
		<m>																
	LD L,A	11 101 101						S/D		2	6	Ar→Ir	•	•	•	•	•	•
		01 000 111																
	LD R,A	11 101 101						S/D		2	6	Ar→Rr	•	•	•	•	•	•
		01 001 111																
	LD (BC),A	00 000 010					D	S		1	7	Ar→$(BC)_M$	•	•	•	•	•	•
	LD(DE),A	00 010 010					D	S		1	7	Ar→$(DE)_M$	•	•	•	•	•	•
	LD (mn),A	00 110 010		D				S		3	13	Ar→$(mn)_M$	•	•	•	•	•	•
		<n>																
		<m>																
	LD gg'	01 g g'				S/D				1	4	gr'→gr	•	•	•	•	•	•
	LD g,(HL)	01 g 110				D	S			1	6	$(HL)_M$→gr	•	•	•	•	•	•
	LD g,m	00 g 110	S			D				2	6	m→gr	•	•	•	•	•	•
		<m>																
	LD g,(IX + d)	11 011 101			S	D				3	14	$(IX + d)_M$gr	•	•	•	•	•	•
		01 g 110																
		<d>																
	LD g,(IY + d)	11 111 101			S	D				3	14	$(IY + d)_M$→gr	•	•	•	•	•	•
		01 g 110																
		<d>																
	LD (HL),m	00 110 110	S				D			2	9	m→$(HL)_M$	•	•	•	•	•	•
		<m>																

Table 41. 8-Bit Load (Continued)

Operation Name	Mnemonics	Op Code	Addressing							Bytes	States	Operation	Flags					
													7	6	4	2	1	0
			Immed	Ext	Ind	Reg	Regl	Imp	Rel				S	Z	H	P/V	N	C
Load 8-Bit Data	LD (IX + d),m	11 011 101 00 110 110 <d>	S		D					4	15	$m \rightarrow (IX + d)_M$	•	•	•	•	•	•
	LD (IY + d),m	11 111 101 01 110 g <d> <m>	S		D					4	15	$m \rightarrow (IY + d)_M$	•	•	•	•	•	•
	LD (HL),g	01 110 g				S	D			1	7	$gr \rightarrow (HL)_M$	•	•	•	•	•	•
	LD (IX + d),g	11 011 101 01 110 g <d>			D	S				3	15	$gr \rightarrow (IX+d)_M$	•	•	•	•	•	•
	LD (IY + d),g	11 111 101 01 110 g <d>			D	S				3	15	$gr \rightarrow (IY + d)_M$	•	•	•	•	•	•

(1) In the case of R1 and Z Mask, interrupts are not sampled at the end of LD A, I or LD A,R.

Table 42. 16-Bit Load

Operation Name	Mnemonics	Op Code	Addressing							Bytes	States	Operation	Flags					
													7	6	4	2	1	0
			Immed	Ext	Ind	Reg	Regl	Imp	Rel				S	Z	H	P/V	N	C
Load 16-Bit Data	LD ww,mn	00 ww0 001 <n> <m>	S			D				3	9	$mn \rightarrow ww_R$	•	•	•	•	•	•
	LD IX,mn	11 011 101 00 100 001 <n> <m>	S					D		4	12	$mn \rightarrow IX_R$	•	•	•	•	•	•

Table 42. 16-Bit Load (Continued)

Operation Name	Mnemonics	Op Code	Addressing							Bytes	States	Operation	Flags					
													7	6	4	2	1	0
			Immed	Ext	Ind	Reg	RegI	Imp	Rel				S	Z	H	P/V	N	C
Load 16-Bit Data	LD IY,mn	11 111 101	S					D		4	12	$mn \rightarrow IY_R$	•	•	•	•	•	•
		00 100 001																
		<n>																
		<m>																
	LD SP,HL	11 111 001						S/D		1	4	$HI_R \rightarrow SP_R$	•	•	•	•	•	•
	LD SP,IX	11 011 101						S/D		2	7	IX_R-SP_R	•	•	•	•	•	•
		11 111 001																
	LD SP,IY	11 111 101						S/D		2	7	$IY_R \rightarrow SP_R$	•	•	•	•	•	•
		11 111 001																
	LD ww,(mn)	11 101 101		S		D				4	18	$(mn + 1)_M \rightarrow wwHr$	•	•	•	•	•	•
		01 ww1 011										$(mn)_M \rightarrow wwLr$						
		<n>																
		<m>																
	LD HL,(mn)	00 101 010		S				D		3	15	$(mn + 1)_M \rightarrow Hr$	•	•	•	•	•	•
		<n>										$(mn)_M \rightarrow Lr$						
		<m>																
	LD IX,(mn)	11 011 101		S				D		4	18	$(mn + 1)_M \rightarrow IXHr$	•	•	•	•	•	•
		00 101 010										$(mn)_M \rightarrow IXLr$						
		<n>																
		<m>																
	LD IY,(mn)	11 111 101		S				D		4	18	$(mn + 1)_M \rightarrow IYHr$	•	•	•	•	•	•
		00 101 010										$(mn)_M \rightarrow IYLr$						
		<n>																
		<m>																
	LD (mn),ww	11 101 101		D		S				4	19	$wwHr \rightarrow (mn + 1)_M$	•	•	•	•	•	•
		01 ww0 011										$wwLr \rightarrow (mn)_M$						
		<n>																
		<m>																

Table 42. 16-Bit Load (Continued)

Operation Name	Mnemonics	Op Code	Addressing							Bytes	States	Operation	Flags					
													7	6	4	2	1	0
			Immed	Ext	Ind	Reg	RegI	Imp	Rel				S	Z	H	P/V	N	C
Load 16-bit Data	LD (mn),HL	00 100 010		D				S		3	16	$Hr \rightarrow (mn + 1)_M$	•	•	•	•	•	•
		<n>										$Lr \rightarrow (mn)_M$						
		<m>																
	LD (mn),IX	11 011 101		D				S		4	19	$IXHr\text{-}(mn + 1)_M$	•	•	•	•	•	•
		00 100 010										$IXLr \rightarrow (mn)_M$						
		<n>																
		<m>																
	LD (mn),IY	11 111 101		D				S		4	19	$IYHr \rightarrow (mn + 1)_M$	•	•	•	•	•	•
		00 100 010										$IYLr \rightarrow (mn)_M$						
		<n>																
		<m>																

Table 43. Block Transfer

Operation Name	Mnemonics	Op Code	Addressing							Bytes	States	Operation	Flags					
													7	6	4	2	1	0
			Immed	Ext	Ind	Reg	RegI	Imp	Rel				S	Z	H	P/V	N	C
Block Transfer Search Data														(3)		(2)		
	CPD	11 101 101					S	S		2	12	$Ar = (HL)_M$	-	-	-	-	S	•
		10 101 001										$BC_R\text{-}1 \rightarrow BC_R$						
												$HL_R\text{-}1 \rightarrow HL_R$		(3)		(2)		
	CPDR	11 101 101					S	S		2	14	$BC_R \neq 0$ $Ar \neq (HL)_M$	-	-	-	-	S	•
		10 111 001									12	$BC_R = 0$ or $Ar = (HL)_M$						
												Q $Ar\text{-}(HL)_R$ $BC_R\text{-}1\text{-}BC_R$ $HL_R\text{-}1 \rightarrow HL_R$						
												Repeat Q until						
												$Ar = (HL)_M$ or $BC_R = 0$		(3)		(2)		

Table 43. Block Transfer (Continued)

Operation Name	Mnemonics	Op Code	Addressing							Bytes	States	Operation	Flags					
													7	6	4	2	1	0
			Immed	Ext	Ind	Reg	Regl	Imp	Rel				S	Z	H	P/V	N	C
	CPI	11101101					S	S		2	12	$Ar-(HL)_M$	-	-	-	-	S	•
		10100001										$BC_R-1 \rightarrow BC_R$						
												$HL_R + 1 \rightarrow HL_R$		(3)		(2)		
	CPIR	11101101					S	S		2	14	$BC_R \neq 0$ $Ar*(HL)_M$	-	-	-	-	S	•
		10110001									12	$BC_R = 0$ or $Ar = (HL)_M$						
												Q $Ar-(HL)_M$ $BC_R-1 \rightarrow BC_R$ $HL_R + 1 \rightarrow HL_R$						
												Repeat Q until						
												$Ar = (HL)_M$ or $BC_R = 0$				(2)		
	LDD	11 101 101					S/D			2	12	$(HL)_M \rightarrow (DE)_M$	•	•	R	-	R	•
		10 101 000										$BC_R -1 \rightarrow BC_R$						
												$DE_R-1 \rightarrow DE_R$						
												$HL_R-1 \rightarrow HL_R$						
	LDDR	11 101 101					S/D			2	$14(BC_R \neq 0)$	Q $(HL)_M \rightarrow (DE)_M$ $BC_R -1 \rightarrow BC_R$ $DE_R -1 \rightarrow DE_R$ $HL_R -1 \rightarrow HL_R$	•	•	R	R	R	•
		10 111 000									$12(BC_R = 0)$							
												Repeat Q until						
												$BC_R = 0$				(2)		
	LDI	11 101 101					S/D			2	12	$(HL)_M \rightarrow DE)_R$	•	•	R	-	R	•
		10 100 000										$BC_R-1 \rightarrow BC_R$						
												$DE_R + 1 \rightarrow DE_R$						
												$HL_R + 1 \rightarrow HL_R$						
	LDIR	11 101 101					S/D			2	$14(BC_R \neq 0)$	Q $(HL)_M \rightarrow (DE)_M$ $BC_R-1 \rightarrow BC_R$ $DE_R + 1 \rightarrow DE_R$ $HL_R + 1 \rightarrow HL_R$	•	•	R	R	R	•
		10 110 000									$12(BC_R = 0)$							
												Repeat Q until						
												$BC_R = 0$						

(2) P/V = 0: $BC_R-1 = 0$
P/V = 1: $BC_R-1 \neq 0$
(3) Z = 1: $Ar = (HL)_M$
Z = 0 :$Ar \neq (HL)_M$

Table 44. Stock and Exchange

Operation Name	Mnemonics	Op Code	Addressing							Bytes	States	Operation	Flags					
													7	6	4	2	1	0
			Immed	Ext	Ind	Reg	Regl	Imp	Rel				S	Z	H	P/V	N	C
PUSH	PUSH zz	11zz 0101				S		D		1	11	zzLr→$(SP-2)_M$ zzHr→$(SP-1)_M$ SP_R-2→SP_R	•	•	•	•	•	•
	PUSH IX	11 011 101 11 100 101						S/D		2	14	IXLr→$(SP-2)_M$ IXHr→$(SP-1)_M$ SP_R-2→SP_R	•	•	•	•	•	•
PUSH	PUSH IY	11 111 101 11 100 101						S/D		2	14	IYLr→$(SP-2)_M$ IYHr→$(SP-1)_M$ SP_R-2→SP_R	•	•	•	•	•	•
POP	POP zz	11 zz0 001				D		S		1	9	$(SP + 1)_M$→xxHr(4) (SP)M→zzLx $SP_R + 2$→SP_R	•	•	•	•	•	•
	POP IX	11 011 101 11 100 001						S/D		2	12	$(SP + 1)_M$→IXHr $(SP)_M$→IXLr $SP_R + 2$→SP_R	•	•	•	•	•	•
	POP IY	11 111 101 11 100 001						S/D		2	12	$(SP + 1)_M$→IYHr $(SP)_M$-IYLr $SP_R + 2$→SP_R	•	•	•	•	•	•

Table 44. Stock and Exchange (Continued)

Operation Name	Mnemonics	Op Code	Addressing							Bytes	States	Operation	Flags					
													7	6	4	2	1	0
			Immed	Ext	Ind	Reg	Regl	Imp	Rel				S	Z	H	P/V	N	C
Exchange	EX AFAF'	00 001 000						S/D		1	4	AF_R-AF_R'	•	•	•	•	•	•
	EX DE, HL	11 101 011						S/D		1	3	DE_R-HL_R	•	•	•	•	•	•
	EX X	11 011 001						S/D		1	3	BC_R-BC_R'	•	•	•	•	•	•
												$DE_R \rightarrow DE_R$'						
												$HL_R \rightarrow HL_R$'						
	EX (SP),HL	11 100 011						S/D		1	16	$Hr \rightarrow (SP + 1)_M$	•	•	•	•	•	•
												$Lr \rightarrow (SP)_M$						
	EX (SP),IX	11 011 101						S/D		2	19	$IXHr \rightarrow (SP + 1)_M$	•	•	•	•	•	•
												$IXLr$-$(SP)_M$						
	EX (SP),IY	11 111 101						S/D		2	19	$IYHr$-$(SP + 1)_M$	•	•	•	•	•	•
		11 100 011										$IYLr \rightarrow (SP)_M$						
(4) In the case of POP AF, Flag is written as current contents of the stack																		

.

PROGRAM AND CONTROL INSTRUCTIONS

Table 45. Program Control Instructions

Operation Name	Mnemonics	Op Code	Addressing							Bytes	States	Operation	Flags					
													7	6	4	2	1	0
			Immed	Ext	Ind	Reg	RegI	Imp	Rel				S	Z	H	P/V	N	C
Call	CALL mn	11 001 101		D						3	16	PCHr→$(SP-1)_M$	•	•	•	•	•	•
		<n>										PCLr→$(SP-2)_M$						
		<m>										mn→PC_R						
												SP_R-2→SP_R						
	CALL f,mn	11 f 100		D						3	6 (f : false)	continue : f is false	•	•	•	•	•	•
		<n>									16 (f: true)	CALL mn: f is true						
		<m>																
Jump	DJNZj	00 010 000						D		2	9 (Br ≠ 0)	Br-1→Br	•	•	•	•	•	•
		<j-2>								2	7 (Br = 0)	continue: Br = 0						
												PC_R + j→PC_R: Br ≠ 0						
	JP f,mn	11 f 010		D						3	6 (f: false)	mn→PC_R: f is true	•	•	•	•	•	•
		<n>								3	9 (f: true)	continue: f is false						
		<m>																
	JP mn	11 000 011		D						3	9	mn→PC_R	•	•	•	•	•	•
		<n>																
		<m>																
	JP (HL)	11 101 001					D			1	3	HL_R→PC_R	•	•	•	•	•	•
	JP (IX)	11 011 101					D			2	6	IX_R→PC_R	•	•	•	•	•	•
		11 101 001																
	JP (IY)	11 111 101					D			2	6	IY_R→PC_R	•	•	•	•	•	•
		11 101 001																
	JR j	00 011 000							D	2	8	PC_R + j→PC_R	•	•	•	•	•	•
		<j-2>																
	JR Cj	00 111 000							D	2	6	continue: C = 0	•	•	•	•	•	•
		<j-2>								2	8	PC_R + j→PC_R: C = 1						
	JR NCj	00 110 000							D	2	6	continue : C = 1	•	•	•	•	•	•
		<j-2>								2	8	PC_R + j→PC_R : C = 0						

Table 45. Program Control Instructions (Continued)

Operation Name	Mnemonics	Op Code	Addressing							Bytes	States	Operation	Flags					
													7	6	4	2	1	0
			Immed	Ext	Ind	Reg	RegI	Imp	Rel				S	Z	H	P/V	N	C
Jump	JR Zj	00 101 000							D	2	6	continue : Z = 0	•	•	•	•	•	•
		<j-2>								2	8	PC_R, + j→PC_R : Z = 1						
	JR NZj	00 100 000							D	2	6	continue : Z = 1						
		<j-2>								2	8	PC_R + j→PC_R : Z = 0						
Return	RET	11001001						D		1	9	$(SP)_M$→PCLr	•	•	•	•	•	•
												$(SP + 1)_M$→PCHr						
												SP_R + 2→SP_R						
	RET f	11f 000							D	1	5 (f : false)	continue : f is false	•	•	•	•	•	•
										1	10 (f : true)	RET : f is true						
	RETI	11101101						D		2	12 (R0,R1)	$(SP)_M$→PCLr	•	•	•	•	•	•
		01001101									ZZ(z)	$(SP + 1)_M$→PCHr						
												SP_R + 2→SP_R						
	RETN	11101101						D		2	12	$(SP)_M$→PCLr	•	•	•	•	•	•
		01000101										$(SP + 1)_M$→PCHr						
												SP_R + 2→SP_R						
												IEF2→IEF1						
Restart	RST v	11 v 111						D		1	11	PCHr→$(SP-1)_M$	•	•	•	•	•	•
												PCLr→$(SP-2)_M$						
												0→PCHr						
												v→PCLr						
												SP_R-2→SP_R						

Table 46. I/O Instructions

Operation Name	Mnemonics	Op Code	Addressing							Bytes	States	Operation	Flags					
													7	6	4	2	1	0
			Immed	Ext	Ind	Reg	Regl	Imp	Rel				S	Z	H	P/V	N	C
INPUT	IN A,(m)	11 011 011						D	S	2	9	(Am)1,→Ar	•	•	•	•	•	•
		<m>										m→A0~A7						
												Ar→A8~A16						
	IN g,(C)	11 101 101				D			S	2	9	(BC)1→gr						
		01 g 000										g = 110 : Only the	-	-	R	P	R	•
												flags change						
												Cr→A0~A7						
												Br→A8~16						
	IN0 g,(m)**	11 101 101				D			S	3	12	(00m)g→gr	-	-	R	P	R	•
		00 g 000										g = 110 : Only the						
												flags change						
		<m>										m→A0~A7						
												(00)→A8~A16		(5)			(6)	
	IND	11 101 101					D		S	2	12	$(BC)_M \rightarrow (HL)_M$	X	-	X	X	-	X
		10 101 010										Hl2→1→Hl2						
												Br→1→Br						
												Cr→A0~A7					(6)	
	INDR	11 101 101					D		S	2	14 (Br ≠ 0)	Q (BC)1→$(HL)_M$	X	S	X	X	-	X
		10 111 010									12 (BR = 0)	HL2→1→HL8						
												Br-1→Br						
												Repeat Q until						
												Br = 0						
												Cr→A0~A7						
												Br→A8~A16						
														(5)			(6)	
	INI	11 101 101					D		S	2	12	$(BC)1 \rightarrow (HL)_M$	X	-	X	X	-	X
		10 100 010										$HL_R + 1 \rightarrow HL_R$						
												Br-1→Br						
												Cr→A0~A7						
												Br→A8~A16					(6)	

Table 46. I/O Instructions (Continued)

Operation Name	Mnemonics	Op Code	Addressing							Bytes	States	Operation	Flags					
													7	6	4	2	1	0
			Immed	Ext	Ind	Reg	Regl	Imp	Rel				S	Z	H	P/V	N	C
INPUT	INIR	11 101 101					D		S	2	14 (Br ≠ 0)	$(BC)_I \rightarrow (HL)_M$	X	S	X	X	-	X
		10 110 010									12 (Br = 0)	Q $HL_R + 1 \rightarrow HL_R$						
												Br-f→Br						
												Repeat Q until						
												Br = 0						
												Cr→A0~A7						
												Br→A8→A16						
OUTPUT	OUT (m)A	11 010 011						S	D	2	10	Ar→(Am)1	•	•	•	•	•	•
		<m>										m→A0~A7						
												Ar→A8~A16						
	OUT (C),g	11 101 101				S			D	2	10	gr→(BC)1	•	•	•	•	•	•
		01 g 001										Cr→A0~A7						
												Br→A8~A16						
	OUT0(m),g**	11 101 101				S			D	3	13	gr→(00m)1	•	•	•	•	•	•
		00 g 001										m→A0~A7						
		<m>										00→A8~A16		(5)			(6)	
	OTDM**	11 101 101					S		D	2	14	$(HL)_M \rightarrow (00C)1$	-	-	-	P	-	-
		10 001 011										$HL_R\text{-}1 \rightarrow HL_R$						
												Cr-1→Cr						
												Br-1→Br						
												Cr→A0~A7						
												00→A8~A16					(6)	
	OTDMR**	11 101 101					S		D	2	16 (Br ≠ 0)	$(HL)_M \rightarrow (00C)1$	R	S	R	S	-	R
		10 011 011									14 (Br = 0)	Q $HL_R\text{-}1\text{-}HL_R$						
												Cr~1→Cr						
												Br-1→Br						
												Repeat Q until						
												Br = 0						
												Cr→A0~A7						
												00→A8~A16					(6)	

Table 46. I/O Instructions (Continued)

Operation Name	Mnemonics	Op Code	Addressing							Bytes	States	Operation	Flags					
													7	6	4	2	1	0
			Immed	Ext	Ind	Reg	Regl	Imp	Rel				S	Z	H	P/V	N	C
OUTPUT	OTDR	11 101 101 10 111 011					S		D	2	14 (Br ≠ 0) 12 (Br = 0)	Q $(HL)_M \rightarrow (BC)_M 1$ $HL_R\text{-}1 \rightarrow HL_R$ Br-1Br Repeat Q until Br = 0 Cr→A0~A7 Br→A8~A16	X	S	X	X	-	X
	OUTI	11 101 101 10 100 011					S		D	2	12	Q $(HL)_M \rightarrow (BC)_M$ $HL_R + 1 \rightarrow HL_R$ Br-1→Br Repeat Q until BR = 0 Cr→A0~A7 Br→A8~A16	X	(5) -	X	X	(6) -	X
	OTIR	11 101 101 10 110 011					S		D	2	14 (Br ≠ 0) 12 (Br = 0)	Q $(HL)_M \rightarrow (BC)_M$ $HL_R + 1 \rightarrow HL_R$ Br-1→Br Repeat Q until Br = 0 Cr→A0~A7 Br→A8~A16	X	S	X	X	(6) -	X
	TSTIOm**	11 101 101 01 110 100 <m>	S						S	3	12	(00C)1*m Cr→A0~A7 00→A8~A16	-	- (5)	S	P	R (6)	R
	OTIM**	11 101 101 10 000 011					S		D	2	14	$(HL)_M \rightarrow (00C)_I$ $HL_R + 1 \rightarrow HL_R$ Cr + 1→Cr Br-1→Br Cr→A0~A7 00→A8~A16	-	-	-	P	- (6)	-

Table 46. I/O Instructions (Continued)

Operation Name	Mnemonics	Op Code	Addressing							Bytes	States	Operation	Flags					
													7	6	4	2	1	0
			Immed	Ext	Ind	Reg	Regl	Imp	Rel				S	Z	H	P/V	N	C
	OTIMR**	11 101 101					S		D	2	16 (Br ≠ 0)	$(HL)_M \rightarrow (00C)_I$	R	S	R	S	-	R
		10 010 011									14 (Br = 0)	$HL_R + 1 \rightarrow HL_R$						
												Q $Cr + 1 \rightarrow Cr$						
												$Br-1 \rightarrow Br$						
												Repeat Q until						
												Br = 0						
												$Cr \rightarrow A0 \sim A7$						
												$00 \rightarrow A8 \sim A16$		(5)			(6)	
	OUTD	11 101 101						S	D	2	12	$(HL)_M \rightarrow (BC)_1$	X	-	X	X	-	X
		10 101 011										$HL_R-1 \rightarrow HL_R$						
												$Br-1 \rightarrow Br$						
												$Cr \rightarrow A0 \sim A7$						
												$Br \rightarrow A8 \sim A16$						

(5) Z = 1 : Br-1 = 0
Z = 0 : Br-1 ≠ 0
(6) N = 1: MSB of Data = 1
N = 0 : MSB of Data = 0

Special Control Instructions

Table 47. Special Control Instructions

Operation Name	Mnemonics	Op Code	Addressing							Bytes	States	Operation	Flags					
													7	6	4	2	1	0
			Immed	Ext	Ind	Reg	Regi	Imp	Rel				S	Z	H	P/V	N	C
Special Function	DAA	00 100 111						S/D		1	4	Decimal Adjust Accumulator	-	-	-	P	•	-
Carry Control	CCF	00 111 111								1	3	$\overline{C}\rightarrow C$	•	•	R	•	R	-
	SCF	00 110 111								1	3	$1\rightarrow C$	•	•	R	•	R	S
CPU Control	DI	11 110 011								1	3	$0\rightarrow$IEF1,$0\rightarrow$IEF2 (7)	•	•	•	•	•	•
	EI	11 111 011								1	3	$1\rightarrow$IEF1,$1\rightarrow$IEF2 (7)	•	•	•	•	•	•
	HALT	01 110 110								1	3	CPU halted	•	•	•	•	•	•
	IM0	11 101 101								2	6	Interrupt	•	•	•	•	•	•
		01 000 110										Mode 0						
	IM1	11 101 101								2	6	Interrupt	•	•	•	•	•	•
		01 010 110										Mode 1						
	IM2	11 101 101								2	6	Interrupt	•	•	•	•	•	•
		01 011 110										Mode 2						
	NOP	00 000 000								1	3	No operation	•	•	•	•	•	•
	SLP**	11 101 101								2	8	Sleep	•	•	•	•	•	•
		01 110 110																

7) Interrupts are not sampled at the end of DI or EI.

Instruction Summary

** : Added new instructions to Z80

MNEMONICS	Bytes	Machine Cycles	States
ADC A,m	2	2	6
ADC A,g	1	2	4
ADC A, (HL)	1	2	6
ADC A, (IX+d)	3	6	14
ADC A, (IY+d)	3	6	14
ADD A,m	2	2	6
ADD A,g	1	2	4
ADD A, (HL)	1	2	6
ADD A, (IX+d)	3	6	14
ADD A, (IY+d)	3	6	14
ADC HL,ww	2	6	10
ADD HL,ww	1	5	7
ADD IX,xx	2	6	10
ADD IY,yy	2	6	10
AND m	2	2	6
AND g	1	2	4
AND (HL)	1	2	6
AND (IX+d)	3	6	14
AND (IY+d)	3	6	14
BIT b, HU	2	3	9
BIT b, (IX+d)	4	5	15
BIT b, (IY+d)	4	5	15
BIT b,g	2	2	6
CALL f,mn	3	2	6
			(If condition is false)

MNEMONICS	Bytes	Machine Cycles	States
	3	6	16
			(If condition is true)
CALL mn	3	6	16
CCF	1	1	3
CPD	2	6	12
CPDR	2	8	14
			(If $BC_R \neq 0$ and $Ar \neq (HL)_M$
	2	6	12
			(If $BC_R = 0$ or $Ar = (HL)_M$
CP (HL)	1	2	6
CPI	2	6	12
CPIR	2	8	14
			(If $BC_R \neq 0$ and $Ar \neq (HL)_M$
	2	6	12
			(If BCR = 0 or $Ar = (HL)_M$
CP (IX+d)	3	6	14
CP (IY+d)	3	6	14
CPL	1	1	3
CP m	2	2	6
CP g	1	2	4
DAA	1	2	4
DEC (HL)	1	4	10
DEC IX	2	3	7
DEC IY	2	3	7
DEC (IX+d)	3	8	18
DEC (IY+d)	3	8	18
DEC g	1	2	4
DEC ww	1	2	4
DI	1	1	3
DJNZ j	2	5	9 (if Br ≠ 0)

MNEMONICS	Bytes	Machine Cycles	States
	2	3	7 (if Br = 0)
EI	1	1	3
EX AF,AF'	1	2	4
EX DE,HL	1	1	3
EX (SP),HL	1	6	16
EX (SP)I,IX	2	7	19
EX (SP),IY	2	7	19
EXX	1	1	3
HALT	1	1	3
IM 0	2	2	6
IM 1	2	2	6
IM 2	2	2	6
INC g	1	2	4
INC (HL)	1	4	10
INC (IX+d)	3	8	18
INC (IY+d)	3	8	18
INC ww	1	2	4
INC IX	2	3	7
INC IY	2	3	7
IN A,(m)	2	3	9
IN g,(C)	2	3	9
INI	2	4	12
INIR	2	6	14 (if Br ≠ 0)
	2	4	12 (If Br = 0)
IND	2	4	12
INDR	2	6	14 (If Br ≠ 0)
INDR	2	4	12 (If Br = 0)
IN0 g,(m)**	3	4	12
JP f,mn	3	2	6 (If f is false)

MNEMONICS	Bytes	Machine Cycles	States
	3	3	9
			(If f is true)
JP (HL)	1	1	3
JP (IX)	2	2	6
JP (IY)	2	2	6
JP mn	3	3	9
JR j	2	4	8
JR C,j	2	2	6
			(If condition is false)
	2	4	8
			(If condition is true)
JR NC,j	2	2	6
			(if condition is false)
	2	4	8
			(If condition is true)
JR Z,j	2	2	6
			(If condition is false)
	2	4	8
			If condition is true)
JR NZ,j	2	2	6
			(If condition is false)
	2	4	8
			(If condition is true)
LD A, (BC)	1	2	6
LD A, (DE)	1	2	6
LD A,I	2	2	6
LD A, (mn)	3	4	12
LD A,R	2	2	6
LD (BC),A	1	3	7
LDD	2	4	12

MNEMONICS	Bytes	Machine Cycles	States
LD (DE),A	1	3	7
LD ww,mn	3	3	9
LD ww,(mn)	4	6	18
LDDR	2	6	14 (If $BC_R \neq 0$)
	2	4	12 (If $BC_R = 0$
LD (HL),m	2	3	9
LD HL,(mn)	3	5	15
LD (HL),g	1	3	7
LDI	2	4	12
LDI,A	2	2	6
LDIR	2	6	14 (If $BC_R \neq 0$)
	2	4	12 (If $BC_R = 0$)
LD IX,mn	4	4	12
LID IX,(mn)	4	6	18
LD (IX+d),m	4	5	15
LD (IX+ d),g	3	7	15
LD IY,mn	4	4	12
LD IY,(mn)	4	6	18
LD (IY+d),m	4	5	15
LD (IY+d),g	3	7	15
LD (mn),A	3	5	13
LD (mn),ww	4	7	19
LD (mn),HL	3	6	16
LD (mn),IX	4	7	19
LD (mn),IY	4	7	19
LD R,A	2	2	6
LD g,(HL)	1	2	6
LD g,(IX+d)	3	6	14
LD g,(IY+d)	3	6	14
LD g,m	2	2	6

MNEMONICS	Bytes	Machine Cycles	States
LD g,g'	1	2	4
LD SP,HL	1	2	4
LD SP,IX	2	3	7
LD SP,IY	2	3	7
MLT ww"	2	13	17
NEG	2	2	6
NOP	1	1	3
OR (HL)	1	2	6
OR (IX+d)	3	6	14
OR (IY+d)	3	6	14
OR m	2	2	6
OR g	1	2	4
OTDM**	2	6	14
OTDMR**	2	8	16 (If Br ≠ 0)
	2	6	14 (If Br = 0)
OTDR	2	6	14 (If Br ≠ 0)
	2	4	12 (If Br = 0
OTIM**	2	6	14
OTIMR**	2	8	16 (If Br ≠ 0)
	2	6	14 (If Br = 0)
OTIR	2	6	14 (If Br ≠ 0)
	2	4	12 (If Br = 0)
OUTD	2	4	12
OUTI	2	4	12
OUT (m),A	2	4	10
OUT (C),g	2	4	10
OUT0 (m),g **	3	5	13
POP IX	2	4	12
POP IY	2	4	12
POP zz	1	3	9

MNEMONICS	Bytes	Machine Cycles	States
PUSH IX	2	6	14
PUSH IY	2	6	14
PUSH zz	1	5	11
RES b,(HL)	2	5	13
RES b,(IX+d)	4	7	19
RES b,(IY+d)	4	7	19
RES b,g	2	3	7
RET	1	3	9
RET f	1	3	5
			(If condition is false)
	1	4	10
			(If condition is true)
RETI	2	4 (R0, R1)	12 (R0, R1)
	10 (Z)		22 (Z)
RETN	2	4	12
RLA	1	1	3
RLCA	1	1	3
RLC (HL)	2	5	13
RLC (IX-1-dl	4	7	19
RLC (IY+d)	4	7	19
RLC g	2	3	7
RLD	2	8	16
RL (HL)	2	5	13
RL (IX+d)	4	7	19
RL (IY+d)	4	7	19
RL g	2	3	7
RRA	1	1	3
RRCA	1	1	3
RRC (HL)	2	5	13
RRC (IX+d)	4	7	19

MNEMONICS	Bytes	Machine Cycles	States
RRC (IY+d)	4	7	19
RRC g	2	3	7
RRD	2	8	16
RR (HL)	2	5	13
RR (IX+d)	4	7	19
RR (IY+d)	4	7	19
RR g	2	3	7
RST v	1	5	11
SBC A,(HL)	1	2	6
SBC A, (IX+d)	3	6	14
SBC A,(IY+d)	3	6	14
SBC A,m	2	2	6
SBC A,g	1	2	4
SBC HL,ww	2	6	10
SCF	1	1	3
SET b,(HL)	2	5	13
SET b,(IX+d)	4	7	19
SET b,(IY+d)	4	7	19
SET b,g	2	3	7
SLA (HL)	2	5	13
SLA (IX+d)	4	7	19
SLA (IY+d)	4	7	19
SLA g	2	3	7
SLP**	2	2	8
SRA (HL)	2	5	13
SRA (IX+d)	4	7	19
SRA (IY+d)	4	7	19
SRA g	2	3	7
SRL (HL)	2	5	13
SRL (IX+d)	4	7	19

MNEMONICS	Bytes	Machine Cycles	States
SRL (IY+d)	4	7	19
SRL g	2	3	7
SUB (HL)	1	2	6
SUB (IX+d)	3	6	14
SUB (IY+d)	3	6	14
SUB m	2	2	6
SUB g	1	2	4
**TSTIO m	3	4	12
**TST g	2	3	7
TST m**	3	3	9
TST (HL)**	2	4	10
XOR (HL)	1	2	6
XOR (IX+d)	3	6	14
XOR (IY+d)	3	6	14
XOR m	2	2	6
XOR g	1	2	4

Op Code Map

Table 48. 1st Op Code Map Instruction Format: XX

				ww (L0 = ALL)											L0 = 0~7				
				BC	DE	HL	SP								BC	DE	HL	AF	zz
				g (LO = 0~7)											NZ	NC	P0	P	f
				B	D	H	(HL)	B	D	H	(HL)				00H	10H	20H	30H	v
		HI / LO		0000	0001	0010	0011	0100	0101	0110	0111	1000	1001	1010	1011	1100	1101	1110	1111	
				0	1	2	3	4	5	6	7	8	9	A	B	C	D	E	F	
S (HI = ALL)	B	0000	0	N0P	DJNZj	JR NZ,j	JR NC,j	LD g, s			note 1)	ADD A,s	SUB s	AND s	OR s	RET f				0
	C	0001	1	LD ww, mn												POP zz				1
	D	0010	2	LD (ww), A		LD (mn) ,HL	LD (mn), A									JP f, mn				2
	E	0011	3	INC ww												JP mn	OUT (m),A	EX(SP), HL	DI	3
	H	0100	4	INC g			note1									CALL f, mn				4
	L	0101	5	DEC g			note1									PUSH zz				5
	(HL)	0110	6	LD g,m			note1	note2			HALT	note2	note2	note2	note2	ADD A,m	SUB m	AND m	OR m	6
	A	0111	7	RLCA	RLA	DAA	SCF									RST v				7
	B	1000	8	EXAF,A F’	JR j	JR Z,j	JR C,j	LD g, s				ADC A,s	SBC A,s	XOR s	CP s	RET f				8
	C	1001	9	ADD HL, ww												RET	EXX	JP(HL)	LD SP, HL	9
	D	1010	A	LD A,(ww)		LD HL, (mn)	LD A, (mn)									JP f, mn				A
	E	1011	B	DEC ww												Table2	IN A(m)	EXDE,H L	EI	B
	H	1100	C	INC g												CALL f, mn				C
	L	1101	D	DEC g												CALL mn	note3	Table3	note3	D
	(HL)	1110	E	LD g,m				note2				note2	note2	note2	note2	ADC A,m	SBC A,m	XOR m	CP m	E
	A	1111	F	RRCA	RRA	CPL	CCF									RST v				F
				0	1	2	3	4	5	6	7	8	9	A	B	C	D	E	F	
				C	E	L	A	C	E	L	A					Z	C	PE	M	f
				g(L0 = 8~F)												08H	18H	28H	3BH	v
																LO = 8~F				

Note 1: (HL) replaces g.

Note 2: (HL) replaces s.

Note 3: If DDH is supplemented as first Op Code for the instructions which have HL or (HL) as an operand in Table 48, the instructions are executed replacing HL with IX and (HL) with (IX+d).

```
ex. 22H : LD (mn), HL

DDH 22H : LD (mn), IX
```

If FDH is supplemented as 1st Op Code for the instructions which have HL or (HL) as an operand in Table 48, the instructions are executed replacing HL with IY and (HL) with (IY+d).

```
ex. 34H : INC (HL)

FDH 34H : INC (IY+d)
```

However, JP (HL) and EX DE, HL are exceptions and note the following.

- If DDH is supplemented as 1st Op Code for JP (HL), (IX) replaces (HL) as operand and JP (IX) is executed
- If FDH is supplemented as 1st Op Code for JP (HL), (IY) replaces (HL) as operand and JP (IY) is executed
- Even if DDH or FDH is supplemented as 1st Op Code for EX DE, HL, HL is not replaced and the instruction is regarded as illegal instruction.

Table 49. 2nd Op Code Map Instruction Format: CB XX

								b (L0 = 0~7)											
								0	2	4	6	0	2	4	6	0	2	4	6
			HI	0000	0001	0010	0011	0100	0101	0110	0111	1000	1001	1010	1011	1100	1101	1110	1111
			LO	0	1	2	3	4	5	6	7	8	9	A	B	C	D	E	F
g (HI = ALL)	B	0000	0	RLC g	RL g	SLA g		BIT b,g				RES b,g				SET b,g				0
	C	0001	1																	1
	D	0010	2																	2
	E	0011	3																	3
	H	0100	4																	4
	L	0101	5																	5
	(HL)	0110	6	NOTE 1)	NOTE 1)	NOTE 1)		NOTE1)				NOTE1)				NOTE1)				6
	A	0111	7																	7
	B	1000	8	RRC g	RR g	SRA g	SRL g	BIT b,g				RES b,g				SET b,g				8
	C	1001	9																	9
	D	1010	A																	A
	E	1011	B																	B
	H	1100	C																	C
	L	1101	D																	D
	(HL)	1110	E	NOTE 1)	NOTE 1)	NOTE 1)	NOTE 1)	NOTE1)				NOTE1)				NOTE 1)				E
	A	1111	F																	F
				0	1	2	3	4	5	6	7	8	9	A	B	C	D	E	F
								1	3	5	7	1	3	5	7	1	3	5	7
								b (LO = 8 ~ F)											

Table 50. 2nd Op Code Map Instruction Format: ED XX

						ww (L0 = ALL)												
						BC	DE	HL	SP									
		G (L0 = 0~7)																
		B	D	H		B	D	H										
HI / LO		0000	0001	0010	0011	0100	0101	0110	0111	1000	1001	1010	1011	1100	1101	1110	1111	
		0	1	2	3	4	5	6	7	8	9	A	B	C	D	E	F	
0000	0	IN0 g, (m)				IN g, (C)						LDI	LDIR					0
0001	1	OUT0 (m),g				OUT (C),g						CPI	CPIR					1
0010	2					SBC HL, ww						INI	INIR					2
0011	3					LD (mn), ww				OTIM	OTIMR	OUTI	OTIR					3
0100	4	TST g			TST (HL)	NEG		TST m	TSTIO m									4
0101	5					RETN												5
0110	6					IM 0	IM 1		SLP									6
0111	7					LD I,A	LD A,I	RRD										7
1000	8	IN0 g, (m)				IN g, (C)						LDD	LDDR					8
1001	9	OUT0 (m), g				OUT (C) , g						CPD	CPDR					9
1010	A					ADC HL,ww						IND	INDR					A
1011	B					LD ww, (mn)				OTDM	OTDMR	OUTD	OTDR					B
1100	C	TST g				MLT ww												C
1101	D					RETI												D
1110	E						IM 2											E
1111	F					LDR, A	LD A,R	RLD										F
		0	1	2	3	4	5	6	7	8	9	A	B	C	D	E	F	
		C	E	L	A	C	E	L	A									
		g (L0 = 8~F)																

Bus Control Signal Conditions

BUS AND CONTROL SIGNAL CONDITION IN EACH MACHINE CYCLE

* (ADDRESS) invalid

Z (DATA) high impedance.

** added new instructions to Z80

Table 51. Bus and Control Signal Condition in Each Machine Cycle

Instruction	Machine Cycle	States	Address	Data	$\overline{RD}$	$\overline{WR}$	$\overline{MREQ}$	$\overline{IORQ}$	$\overline{M1}$	$\overline{HALT}$	ST
ADD HL,ww	MC1	T1T2T3	1st Op Code Address	1st Op Code	0	1	0	1	0	1	0
	MC2 ~MC5	TiTiTiTi	*	Z	1	1	1	1	1	1	1
ADD IX,xx ADD IY,yy	MC1	T1T2T3	1st Op Code Address	1st Op Code	0	1	0	1	0	1	0
	MC2	T1T2T3	2nd Op Code Address	2nd Op Code	0	1	0	1	0	1	1
	MC3 ~MC6	TiTiTiTi	*	Z	1	1	1	1	1	1	1
ADC HL,ww SBC HL,ww	MC1	T1T2T3	1st Op Code Address	1st Op Code	0	1	0	1	0	1	0
	MC2	T1T2T3	2nd Op Code Address	2nd Op Code	0	1	0	1	0	1	1
	MC3 ~MC6	TiTiTiTi	*	Z	1	1	1	1	1	1	1

Table 51. Bus and Control Signal Condition in Each Machine Cycle (Continued)

Instruction	Machine Cycle	States	Address	Data	$\overline{RD}$	$\overline{WR}$	$\overline{MREQ}$	$\overline{IORQ}$	$\overline{M1}$	$\overline{HALT}$	ST
ADD A,g ADC A,g SUB g SBC A,g AND g OR g XOR g CP g	MC1	T1T2T3	1st Op Code Address	1st Op Code	0	1	0	1	0	1	0
	MC2	Ti	*	Z	1	1	1	1	1	1	1
ADD A,m ADC A,m SUB m SBC A,m AND m OR m XOR m CP m	MC1	T1T2T3	1st Op Code Address	1st Op Code	0	1	0	1	0	1	0
	MC2	T1T2T3	1st operand Address	m	0	1	0	1	1	1	1
ADD A, (HL) ADC A, (HL) SUB (HL) SBC A, (HL) AND HU OR (HL) XOR (HL) CP (HL)	MC1	T1T2T3	1st Op Code Address	1st Op Code	0	1	0	1	0	1	0
	MC2	T1T2T3	HL	DATA	0	1	0	1	1	1	1
ADD A, (IX+ d) ADD A, (IY+d) ADC A, (IX+d) ADC A, (IY+d) SUB (lX+d) SUB (IY+d) SBC A, (IX+ d)	MC1	T1T2T3	1st Op Code Address	1st Op Code	0	1	0	1	0	1	0
	MC2	T1T2T3	2nd Op Code Address	2nd Op Code	0	1	0	1	0	1	1
SBC A, (IY+ d) AND (IX+d)	MC3	T1T2T3	1st operand Address	d	0	1	0	1	1	1	1

Table 51. Bus and Control Signal Condition in Each Machine Cycle (Continued)

Instruction	Machine Cycle	States	Address	Data	$\overline{RD}$	$\overline{WR}$	$\overline{MREQ}$	$\overline{IORQ}$	$\overline{M1}$	$\overline{HALT}$	ST
AND (IY+ d) OR (IX + d) OR (IY+d) XOR (IX + d) XOR (IY+d)	MC4 ~MC6	TiTiTi	*	Z	1	1	1	1	1	1	1
CP (IX+d) CP (IY+d)	MC6	T1T2T3	IX+d IY+d	DATA	0	1	0	1	1	1	1
BIT b,g	MC1	T1T2T3	1st Op Code Address	1st Op Code	0	1	0	1	0	1	0
	MC2	T1T2T3	2nd Op Code Address	2nd Op Code	0	1	0	1	0	1	1
BIT b, (HL)	MC1	T1T2T3	1st Op Code Address	1st Op Code	0	1	0	1	0	1	0
	MC2	T1T2T3	2nd Op Code Address	2nd Op Code	0	1	0	1	0	1	1
	MC3	T1T2T3	HL	DATA	0	1	0	1	1	1	1
BIT b, (IX+d) BIT b, (IY+d)	MC1	T1T2T3	1st Op Code Address	1st Op Code	0	1	0	1	0	1	0
	MC2	T1T2T3	2nd Op Code Address	2nd Op Code	0	1	0	1	0	1	1
	MC3	T1T2T3	1st operand Address	d	0	1	0	1	1	1	1
	MC4	T1T2T3	3rd Op Code Address	3rd Op Code	0	1	0	1	0	1	1
	MC5	T1T2T3	IX+ d IY+d	DATA	0	1	0	1	1	1	1

Table 51. Bus and Control Signal Condition in Each Machine Cycle (Continued)

Instruction	Machine Cycle	States	Address	Data	$\overline{RD}$	$\overline{WR}$	$\overline{MREQ}$	$\overline{IORQ}$	$\overline{M1}$	$\overline{HALT}$	ST
CALL mn	MC1	T1T2T3	1st Op Code Address	1st Op Code	0	1	0	1	0	1	0
	MC2	T1T2T3	1st operand Address	n	0	1	0	1	1	1	1
	MC3	T1T2T3	2nd operand Address	m	0	1	0	1	1	1	1
	MC4	Ti	*	Z	1	1	1	1	1	1	1
	MC5	T1T2T3	SP-1	PCH	1	0	0	1	1	1	1
	MC6	T1T2T3	SP-2	PCL	1	0	0	1	1	1	1
CALL f,mn (If condition is false)	MC1	T1T2T3	1st Op Code Address	1st Op Code	0	1	0	1	0	1	0
	MC2	T1T2T3	1st operand Address	n	0	1	0	1	1	1	1
CALL f,mn if condition is true)	MC1	T1T2T3	1st Op Code Address	1st Op Code	0	1	0	1	0	1	0
	MC2	T1T2T3	1st operand Address	n	0	1	0	1	1	1	1
	MC3	T1T2T3	2nd operand Address	m	0	1	0	1	1	1	1
	MC4	Ti	*	Z	1	1	1	1	1	1	1
	MC5	T1T2T3	SP-1	PCH	1	0	0	1	1	1	1
	MC6	T1T2T3	SP-2	PCL	1	0	0	1	1	1	1
CCF	MC1	T1T2T3	1st Op Code Address	1st Op Code	0	1	0	1	0	1	0

Table 51. Bus and Control Signal Condition in Each Machine Cycle (Continued)

Instruction	Machine Cycle	States	Address	Data	$\overline{RD}$	$\overline{WR}$	$\overline{MREQ}$	$\overline{IORQ}$	$\overline{M1}$	$\overline{HALT}$	ST
CPI CPD	MC1	T1T2T3	1st Op Code Address	1st Op Code	0	1	0	1	0	1	0
	MC2	T1T2T3	2nd Op Code Address	2nd Op Code	0	1	0	1	0	1	1
	MC3	T1T2T3	HL	DATA	0	1	0	1	1	1	1
	MC4 ~MC6	TiTiTi	*	Z	1	1	1	1	1	1	1
CPIR CPDR (If $BC_R \neq 0$ and Ar = $(HL)_M$)	MC1	T1T2T3	1st Op Code Address	1st Op Code	0	1	0	1	0	1	0
	MC2	T1T2T3	2nd Op Code Address	2nd Op Code	0	1	0	1	0	1	1
	MC3	T1T2T3	HL	DATA	0	1	0	1	1	1	1
	MC4~MC8	TiTiTi TíTi	*	Z	1	1	1	1	1	1	1
CPIR CPDR (If BC_R=0 or Ar=$(HL)_M$)	MC1	T1T2T3	1st Op Code Address	1st Op Code	0	1	0	1	0	1	0
	MC2	T1T2T3	2nd Op Code Address	2nd Op Code	0	1	0	1	0	1	1
	MC3	T1T2T3	HL	DATA	0	1	0	1	1	1	1
	MC4~MC6	TiTiTi	*	Z	1	1	1	1	1	1	1
CPL	MC1	T1T2T3	1st Op Code Address	1st Op Code	0	1	0	1	0	1	0
DAA	MC1	T1T2T3	1st Op Code Address	1st Op Code	0	1	0	1	0	1	0
	MC2	Ti	*	Z	1	1	1	1	1	1	1
DI*1	MC1	T1T2T3	1st Op Code Address	1st Op Code	0	1	0	1	0	1	0
* 1 Interrupt request is not sampled.											

Table 51. Bus and Control Signal Condition in Each Machine Cycle (Continued)

Instruction	Machine Cycle	States	Address	Data	$\overline{RD}$	$\overline{WR}$	$\overline{MREQ}$	$\overline{IORQ}$	$\overline{M1}$	$\overline{HALT}$	ST
DJNZ j (If Br ≠ 0)	MC1	T1T2T3	1st Op Code Address	1st Op Code	0	1	0	1	0	1	0
	MC2	Ti*2	*	Z	1	1	1	1	1	1	1
	MC3	T1T2T3	1st operand Address	j-2	0	1	0	1	1	1	1
	MC4~MC5	TiTi	*	Z	1	1	1	1	1	1	1
DJNZ j (If Br=0)	MC1	T1T2T3	1st Op Code Address	1st Op Code	0	1	0	1	0	1	0
	MC2	Ti*1	*	Z	1	1	1	1	1	1	1
	MC3	T1T2T3	1st operand Address	j-2	0	1	0	1	1	1	1
EI*3	MC1	T1T2T3	1st Op Code Address	1st Op Code	0	1	0	1	0	1	0
EX DE, HL EXX	MC1	T1T2T3	1st Op Code Address	1st Op Code	0	1	0	1	0	1	0
EX AF, AF’	MC1	T1T2T3	1st Op Code Address	1st Op Code	0	1	0	1	0	1	0
	MC2	Ti	*	Z	1	1	1	1	1	1	1
EX (SP), HL	MC1	T1T2T3	1st Op Code Address	1st Op Code	0	1	0	1	0	1	0
	MC2	T1T2T3	SP	DATA	0	1	0	1	1	1	1
	MC3	T1T2T3	SP+1	DATA	0	1	0	1	1	1	1
	MC4	Ti	*	Z	1	1	1	1	1	1	1
	MC5	T1T2T3	SP+1	H	1	0	0	1	1	1	1
	MC6	T1T2T3	SP	L	1	0	0	1	1	1	1

*2 DMA,REFRESH, or BUS RELEASE cannot be executed after this state. (Request is ignored)
*3 Interrupt request is not sampled.

Table 51. Bus and Control Signal Condition in Each Machine Cycle (Continued)

Instruction	Machine Cycle	States	Address	Data	$\overline{RD}$	$\overline{WR}$	$\overline{MREQ}$	$\overline{IORQ}$	$\overline{M1}$	$\overline{HALT}$	ST
EX (SP),IX EX (SP),IY	MC1	T1T2T3	1st Op Code Address	1st Op Code	0	1	0	1	0	1	0
	MC2	T1T2T3	2nd Op Code Address	2nd Op Code	0	1	0	1	0	1	1
	MC3	T1T2T3	SP	DATA	0	1	0	1	1	1	1
	MC4	T1T2T3	SP+1	DATA	0	1	0	1	1	1	1
	MC5	Ti	*	Z	1	1	1	1	1	1	1
	MC6	T1T2T3	SP+1	IXH IYH	1	0	0	1	1	1	1
	MC7	T1T2T3	SP	IXL IYL	1	0	0	1	1	1	1
HALT	MC1	T1T2T3	1st Op Code Address	1st Op Code	0	1	0	1	0	1	0
	—	—	Next Op Code Address	Next Op Code	0	1	0	1	0	0	0
IM0 IM1 IM2	MC1	T1T2T3	1st Op Code Address	1st Op Code	0	1	0	1	0	1	0
	MC2	T1T2T3	2nd Op Code Address	2nd Op Code	0	1	0	1	0	1	1
INC g DEC g	MC1	T1T2T3	1st Op Code Address	1st Op Code	0	1	0	1	0	1	0
	MC2	Ti	*	Z	1	1	1	1	1	1	1
INC (HL) DEC (HL)	MC1	T1T2T3	1st Op Code Address	1st Op Code	0	1	0	1	0	1	0
	MC2	T1T2T3	HL	DATA	0	1	0	1	1	1	1
	MC3	Ti	*	Z	1	1	1	1	1	1	1
	MC4	T1T2T3	HL	DATA	1	0	0	1	1	1	1

Table 51. Bus and Control Signal Condition in Each Machine Cycle (Continued)

Instruction	Machine Cycle	States	Address	Data	$\overline{RD}$	$\overline{WR}$	$\overline{MREQ}$	$\overline{IORQ}$	$\overline{M1}$	$\overline{HALT}$	ST
INC (IX+ d) INC (IY+d) DEC (IX+d) DEC (IY+d)	MC1	T1T2T3	1st Op Code Address	1st Op Code	0	1	0	1	0	1	0
	MC2	T1T2T3	2nd Op Code Address	2nd Op Code	0	1	0	1	0	1	1
	MC3	T1T2T3	1st operand Address	d	0	1	0	1	1	1	1
	MC4~MC5	TiTi	*	Z	1	1	1	1	1	1	1
	MC6	T1T2T3	X+ d IY+ d	DATA	0	1	0	1	1	1	1
	MC7	T1	*	Z	1	1	1	1	1	1	1
	MC8	T1T2T3	IX+ d IY+d	DATA	1	0	0	1	1	1	1
INC ww DEC ww	MC1	T1T2T3	1st Op Code Address	1st Op Code	0	1	0	1	0	1	0
	MC2	Ti	*	Z	1	1	t	1	1	1	1
INC IX INC IY DEC IX DEC IY	MC1	T1T2T3	1st Op Code Address	1st Op Code	0	1	0	1	0	1	0
	MC2	T1T2T3	2nd Op Code Address	2nd Op Code	0	1	0	1	0	1	1
	MC3	Ti	*	Z	1	1	1	1	1	1	1
IN A,(m)	MC1	T1T2T3	1st Op Code Address	1st Op Code	0	1	0	1	0	1	0
	MC2	T1T2T3	1st operand Address	m	0	1	0	1	1	1	1
	MC3	T1T2T3	m to A0~A7 A to A8~A15	DATA	0	1	1	0	1	1	1

Table 51. Bus and Control Signal Condition in Each Machine Cycle (Continued)

Instruction	Machine Cycle	States	Address	Data	$\overline{RD}$	$\overline{WR}$	$\overline{MREQ}$	$\overline{IORQ}$	$\overline{M1}$	$\overline{HALT}$	ST
IN g,(C)	MC1	T1T2T3	1st Op Code Address	1st Op Code	0	1	0	1	0	1	0
	MC2	T1T2T3	2nd Op Code Address	2nd Op Code	0	1	0	1	0	1	1
	MC3	T1T2T3	BC	DATA	0	1	1	0	1	1	1
INO g,(m)**	MC1	T1T2T3	1st Op Code Address	1st Op Code	0	1	0	1	0	1	0
	MC2	T1T2T3	2nd Op Code Address	2nd Op Code	0	1	0	1	0	1	1
	MC3	T1T2T3	1st operand Address	m	0	1	0	1	1	1	1
	MC4	T1T2T3	m to A0~A7 00H to A8~A15	DATA	0	1	1	0	1	1	1
INI IND	MC1	T1T2T3	1st Op Code Address	1st Op Code	0	1	0	1	0	1	0
	MC2	T1T2T3	2nd Op Code Address	2nd Op Code	0	1	0	1	0	1	1
	MC3	T1T2T3	BC	DATA	0	1	1	0	1	1	1
	MC4	T1T2T3	HL	DATA	1	0	0	1	1	1	1
INIR INDR (If Br≠0)	MC1	T1T2T3	1st Op Code Address	1st Op Code	0	1	0	1	0	1	0
	MC2	T1T2T3	2nd Op Code Address	2nd Op Code	0	1	0	1	0	1	1
	MC3	T1T2T3	BC	DATA	0	1	1	0	1	1	1
	MC4	T1T2T3	HL	DATA	1	0	0	1	1	1	1
	MC5~MC6	TiTi	*	Z	1	1	1	1	1	1	1

Table 51. Bus and Control Signal Condition in Each Machine Cycle (Continued)

Instruction	Machine Cycle	States	Address	Data	$\overline{RD}$	$\overline{WR}$	$\overline{MREQ}$	$\overline{IORQ}$	$\overline{M1}$	$\overline{HALT}$	ST
INIR INDR (If Br=0)	MC1	T1T2T3	1st Op Code Address	1st Op Code	0	1	0	1	0	1	0
	MC2	T1T2T3	2nd Op Code Address	2nd Op Code	0	1	0	1	0	1	1
	MC3	T1T2T3	BC	DATA	0	1	1	0	1	1	1
	MC4	T1T2T3	HL	DATA	1	0	0	1	1	1	1
JP mn	MC1	T1T2T3	1st Op Code Address	1st Op Code	0	1	0	1	0	1	0
	MC2	T1T2T3	1st operand Address	n	0	1	0	1	1	1	1
	MC3	T1T2T3	2nd operand Address	m	0	1	0	1	1	1	1
JP f,mn (if is false)	MC1	T1T2T3	1st Op Code Address	1st Op Code	0	1	0	1	0	1	0
	MC2	T1T2T3	1st operand Address	n	0	1	0	1	1	1	1
JP f,mn (If f is true)	MC1	T1T2T3	1st Op Code Address	1st Op Code	0	1	0	1	0	1	0
	MC2	T1T2T3	1st operand Address	n	0	1	0	1	1	1	1
	MC3	T1T2T3	2nd operand Address	m	0	1	0	1	1	1	1
JP (HL)	MC1	T1T2T3	1st Op Code Address	1st Op Code	0	1	0	1	0	1	0
JP (IX) JP (IY)	MC1	T1T2T3	1st Op Code Address	1st Op Code	0	1	0	1	0	1	0
	MC2	T1T2T3	2nd Op Code Address	2nd Op Code	0	1	0	1	0	1	1

Table 51. Bus and Control Signal Condition in Each Machine Cycle (Continued)

Instruction	Machine Cycle	States	Address	Data	$\overline{RD}$	$\overline{WR}$	$\overline{MREQ}$	$\overline{IORQ}$	$\overline{M1}$	$\overline{HALT}$	ST
JR j	MC1	T1T2T3	1st Op Code Address	1st Op Code	0	1	0	1	0	1	0
	MC2	T1T2T3	1st operand Address	j-2	0	1	0	1	1	1	1
	MC3~MC4	TiTi	*	Z	1	1	1	1	1	1	1
JR C,j JR NC,j JR Z,j JR NZ,j (if condition is false)	MC1	T1T2T3	1st Op Code Address	1st Op Code	0	1	0	1	0	1	0
	MC2	T1T2T3	1st operand Address	j-2	0	1	0	1	1	1	1
JR C,j JR NC,j JR Z,j JR NZ,j (if condition is true)	MC1	T1T2T3	1st Op Code Address	1st Op Code	0	1	0	1	0	1	0
	MC2	T1T2T3	1st operand Address	j-2	0	1	0	1	1	1	1
	MC3~MC4	TiTi	*	Z	1	1	1	1	1	1	1
LD g,g'	MC1	T1T2T3	1st Op Code Address	1st Op Code	0	1	0	1	0	1	0
	MC2	Ti	*	Z	1	1	1	1	1	1	1
LD g,m	MC1	T1T2T3	1st Op Code Address	1st Op Code	0	1	0	1	0	1	0
	MC2	T1T2T3	1st operand Address	m	0	1	0	1	1	1	1
LD g, (HL)	MC1	T1T2T3	1st Op Code Address	1st Op Code	0	1	0	1	0	1	0
	MC2	T1T2T3	HL	DATA	0	1	0	1	1	1	1

Table 51. Bus and Control Signal Condition in Each Machine Cycle (Continued)

Instruction	Machine Cycle	States	Address	Data	$\overline{RD}$	$\overline{WR}$	$\overline{MREQ}$	$\overline{IORQ}$	$\overline{M1}$	$\overline{HALT}$	ST
LD g, (IX+d) LD g, (IY+d)	MC1	T1T2T3	1st Op Code Address	1st Op Code	0	1	0	1	0	1	0
	MC2	T1T2T3	2nd Op Code Address	2nd Op Code	0	1	0	1	0	1	1
	MC3	T1T2T3	1st operand Address	d	0	1	0	1	1	1	1
	MC4~MC5	TiTi	*	Z	1	1	1	1	1	1	1
	MC6	T1T2T3	IX+d IY+d	DATA	0	1	0	1	1	1	1
LD (HL),g	MC1	T1T2T3	1st Op Code Address	1st Op Code	0	1	0	1	0	1	0
	MC2	Ti	*	Z	1	1	1	1	1	1	1
	MC3	T1T2T3	HL	g	1	0	0	1	1	1	1
LD (IX + d),g LD (IY + d),g	MC1	T1T2T3	1st Op Code Address	1st Op Code	0	1	0	1	0	1	0
	MC2	T1T2T3	2nd Op Code Address	2nd Op Code	0	1	0	1	0	1	1
	MC3	T1T2T3	1st operand Address	d	0	1	0	1	1	1	1
	MC4~MC6	TiTiTi	*	Z	1	1	1	1	1	1	1
	MC7	T1T2T3	IX+d IY+d	g	1	0	0	1	1	1	1
LD (HL),m	MC1	T1T2T3	1st Op Code Address	1st Op Code	0	1	0	1	0	1	0
	MC2	T1T2T3	1st operand Address	m	0	1	0	1	1	1	1
	MC3	T1T2T3	HL	DATA	1	0	0	1	1	1	1

Table 51. Bus and Control Signal Condition in Each Machine Cycle (Continued)

Instruction	Machine Cycle	States	Address	Data	$\overline{RD}$	$\overline{WR}$	$\overline{MREQ}$	$\overline{IORQ}$	$\overline{M1}$	$\overline{HALT}$	ST
LD (IX+d),m LD (IY+d),m	MC1	T1T2T3	1st Op Code Address	1st Op Code	0	1	0	1	0	1	0
	MC2	T1T2T3	2nd Op Code Address	2nd Op Code	0	1	0	1	0	1	1
	MC3	T1T2T3	1st operand Address	d	0	1	0	1	1	1	1
	MC4	T1T2T3	2nd operand Address	m	0	1	0	1	1	1	1
	MC5	T1T2T3	IX+ d IY+d	DATA	1	0	0	1	1	1	1
LD A, (BC) LD A, (DE)	MC1	T1T2T3	1st Op Code Address	1st Op Code	0	1	0	1	0	1	0
	MC2	T1T2T3	BC DE	DATA	0	1	0	1	1	1	1
LD A,(mn)	MC1	T1T2T3	1st Op Code Address	1st Op Code	0	1	0	1	0	1	0
	MC2	T1T2T3	1st operand Address	n	0	1	0	1	1	1	1
	MC3	T1T2T3	2nd operand Address	m	0	1	0	1	1	1	1
	MC4	T1T2T3	mn	DATA	0	1	0	1	1	1	1
LD (BC),A LD (DE),A	MC1	T1T2T3	1st Op Code Address	1st Op Code	0	1	0	1	0	1	0
	MC2	Ti	*	Z	1	1	1	1	1	1	1
	MC3	T1T2T3	BC DE	A	1	0	0	1	1	1	1

Table 51. Bus and Control Signal Condition in Each Machine Cycle (Continued)

Instruction	Machine Cycle	States	Address	Data	$\overline{RD}$	$\overline{WR}$	$\overline{MREQ}$	$\overline{IORQ}$	$\overline{M1}$	$\overline{HALT}$	ST
LD (mn),A	MC1	T1T2T3	1st Op Code Address	1st Op Code	0	1	0	1	0	1	0
	MC2	T1T2T3	1st operand Address	n	0	1	0	1	1	1	1
	MC3	T1T2T3	2nd operand Address	m	0	1	0	1	1	1	1
	MC4	Ti	*	Z	1	1	1	1	1	1	1
	MC5	T1T2T3	mn	A	1	0	0	1	1	1	1

LD A,I
LD A,R } *4
LD I,A
LD R,A
	MC1	T1T2T3	1st Op Code Address	1st Op Code	0	1	0	1	0	1	0

	MC2	T1T2T3	2nd Op Code Address	2nd Op Code	0	1	0	1	0	1	1
LD ww, mn	MC1	T1T2T3	1st Op Code Address	1st Op Code	0	1	0	1	0	1	0
	MC2	T1T2T3	1st operand Address	n	0	1	0	1	1	1	1
	MC3	T1T2T3	2nd operand Address	m	0	1	0	1	1	1	1
LD IX,mn LD IY,mn	MC1	T1T2T3	1st Op Code Address	1st Op Code	0	1	0	1	0	1	0
	MC2	T1T2T3	2nd Op Code Address	2nd Op Code	0	1	0	1	0	1	1
	MC3	T1T2T3	1st operand Address	n	0	1	0	1	1	1	1
	MC4	T1T2T3	2nd operand Address	m	0	1	0	1	1	1	1

*4 In the case of R1 and Z MASK, interrupt request is not sampled.

Table 51. Bus and Control Signal Condition in Each Machine Cycle (Continued)

Instruction	Machine Cycle	States	Address	Data	$\overline{RD}$	$\overline{WR}$	$\overline{MREQ}$	$\overline{IORQ}$	$\overline{M1}$	$\overline{HALT}$	ST
LD HL, (mn)	MC1	T1T2T3	1st Op Code Address	1st Op Code	0	1	0	1	0	1	0
	MC2	T1T2T3	1st operand Address	n	0	1	0	1	1	1	1
	MC3	T1T2T3	2nd operand Address	m	0	1	0	1	1	1	1
	MC4	T1T2T3	mn	DATA	0	1	0	1	1	1	1
	MC5	T1T2T3	mn+1	DATA	0	1	0	1	1	1	1
LD ww,(mn)	MC1	T1T2T3	1st Op Code Address	1st Op Code	0	1	0	1	0	1	0
	MC2	T1T2T3	2nd Op Code Address	2nd Op Code	0	1	0	1	0	1	1
	MC3	T1T2T3	1st operand Address	n	0	1	0	1	1	1	1
	MC4	T1T2T3	2nd operand Address	m	0	1	0	1	1	1	1
	MC5	T1T2T3	mn	DATA	0	1	0	1	1	1	1
	MC6	T1T2T3	mn+ 1	DATA	0	1	0	1	1	1	1
LD IX,(mn) LD IY,(mn)	MC1	T1T2T3	1st Op Code Address	1st Op Code	0	1	0	1	0	1	0
	MC2	T1T2T3	2nd Op Code Address	2nd Op Code	0	1	0	1	0	1	1
	MC3	T1T2T3	1st operand Address	n	0	1	0	1	1	1	1
	MC4	T1T2T3	2nd operand Address	m	0	1	0	1	1	1	1
	MC5	T1T2T3	mn	DATA	0	1	0	1	1	1	1
	MC6	T1T2T3	mn+1	DATA	0	1	0	1	1	1	1

Table 51. Bus and Control Signal Condition in Each Machine Cycle (Continued)

Instruction	Machine Cycle	States	Address	Data	$\overline{RD}$	$\overline{WR}$	$\overline{MREQ}$	$\overline{IORQ}$	$\overline{M1}$	$\overline{HALT}$	ST
LD (mn),HL	MC1	T1T2T3	1st Op Code Address	1st Op Code	0	1	0	1	0	1	0
	MC2	T1T2T3	1st operand Address	n	0	1	0	1	1	1	1
	MC3	T1T2T3	2nd operand Address	m	0	1	0	1	1	1	1
	MC4	Ti	*	Z	1	1	1	1	1	1	1
	MC5	T1T2T3	mn	L	1	0	0	1	1	1	1
	MC6	T1T2T3	mn+1	H	1	0	0	1	1	1	1
LD (mn),ww	MC1	T1T2T3	1st Op Code Address	1st Op Code	0	1	0	1	0	1	0
	MC2	T1T2T3	2nd Op Code Address	2nd Op Code	0	1	0	1	0	1	1
	MC3	T1T2T3	1st operand Address	n	0	1	0	1	1	1	1
	MC4	T1T2T3	2nd operand Address	m	0	1	0	1	1	1	1
	MC5	Ti	*	Z	1	1	1	1	1	1	1
	MC6	T1T2T3	mn	wwL	1	0	0	1	1	1	1
	MC7	T1T2T3	mn+1	wwH	1	0	0	1	1	1	1

Table 51. Bus and Control Signal Condition in Each Machine Cycle (Continued)

Instruction	Machine Cycle	States	Address	Data	$\overline{RD}$	$\overline{WR}$	$\overline{MREQ}$	$\overline{IORQ}$	$\overline{M1}$	$\overline{HALT}$	ST
LD (mn),IX LD (mn),IY	MC1	T1T2T3	1st Op Code Address	1st Op Code	0	1	0	1	0	1	0
	MC2	T1T2T3	2nd Op Code Address	2nd Op Code	0	1	0	1	0	1	1
	MC3	T1T2T3	1st operand Address	n	0	1	0	1	1	1	1
	MC4	T1T2T3	2nd operand Address	m	0	1	0	1	1	1	1
	MC5	Ti	*	Z	1	1	1	1	1	1	1
	MC6	T1T2T3	mn	IXL IYL	1	0	0	1	1	1	1
	MC7	T1T2T3	mn+1	IXH IYH	1	0	0	1	1	1	1
LD SP, HL	MC1	T1T2T3	1st Op Code Address	1st Op Code	0	1	0	1	0	1	0
	MC2	Ti	*	Z	1	1	1	1	1	1	1
LD SP,IX LD SP,IY	MC1	T1T2T3	1st Op Code Address	1st Op Code	0	1	0	1	0	1	0
	MC2	T1T2T3	2nd Op Code Address	2nd Op Code	0	1	0	1	0	1	1
	MC3	Ti	*	Z	1	1	1	1	1	1	1
LDI LDD	MC1	T1T2T3	1st Op Code Address	1st Op Code	0	1	0	1	0	1	0
	MC2	T1T2T3	2nd Op Code Address	2nd Op Code	0	1	0	1	0	1	1
	MC3	T1T2T3	HL	DATA	0	1	0	1	1	1	1
	MC4	T1T2T3	DE	DATA	1	0	0	1	1	1	1

Table 51. Bus and Control Signal Condition in Each Machine Cycle (Continued)

Instruction	Machine Cycle	States	Address	Data	$\overline{RD}$	$\overline{WR}$	$\overline{MREQ}$	$\overline{IORQ}$	$\overline{M1}$	$\overline{HALT}$	ST
LDIR LDDR (If BCR≠0)	MC1	T1T2T3	1st Op Code Address	1st Op Code	0	1	0	1	0	1	0
	MC2	T1T2T3	2nd Op Code Address	2nd Op Code	0	1	0	1	0	1	1
	MC3	T1T2T3	HL	DATA	0	1	0	1	1	1	1
	MC4	T1T2T3	DE	DATA	1	0	0	1	1	1	1
	MC5~MC6	TiTi	*	Z	1	1	1	1	1	1	1
LDIR LDDR (If BCR=0)	MC1	T1T2T3	1st Op Code Address	1st Op Code	0	1	0	1	0	1	0
	MC2	T1T2T3	2nd Op Code Address	2nd Op Code	0	1	0	1	0	1	1
	MC3	T1T2T3	HL	DATA	0	1	0	1	1	1	1
	MC4	T1T2T3	DE	DATA	1	0	0	1	1	1	1
MLT ww**	MC1	T1T2T3	1st Op Code Address	1st Op Code	0	1	0	1	0	1	0
	MC2	T1T2T3	2nd Op Code Address	2nd Op Code	0	1	0	1	0	1	1
	MC3 ~MC13	TiTiTTi TiTiTiTi TiTiTi	*	Z	1	1	1	1	1	1	1
NEG	MC1	T1T2T3	1st Op Code Address	1st Op Code	0	1	0	1	0	1	0
	MC2	T1T2T3	2nd Op Code Address	2nd Op Code	0	1	0	1	0	1	1
NOP	MC1	T1T2T3	1st Op Code Address	1st Op Code	0	1	0	1	0	1	0

Table 51. Bus and Control Signal Condition in Each Machine Cycle (Continued)

Instruction	Machine Cycle	States	Address	Data	$\overline{RD}$	$\overline{WR}$	$\overline{MREQ}$	$\overline{IORQ}$	$\overline{M1}$	$\overline{HALT}$	ST
OUT (m),A	MC1	T1T2T3	1st Op Code Address	1st Op Code	0	1	0	1	0	1	0
	MC2	T1T2T3	1st operand Address	m	0	1	0	1	1	1	1
	MC3	Ti	*	Z	1	1	1	1	1	1	1
	MC4	T1T2T3	m to A0~A7 A to A8~A15	A	1	0	1	0	1	1	1
OUT (C),g	MC1	T1T2T3	1st Op Code Address	1st Op Code	0	1	0	1	0	1	0
	MC2	T1T2T3	2nd Op Code Address	2nd Op Code	0	1	0	1	0	1	1
	MC3	Ti	*	Z	1	1	1	1	1	1	1
	MC4	T1T2T3	BC	g	1	0	1	0	1	1	1
OUT0 (m),g**	MC1	T1T2T3	1st Op Code Address	1st Op Code	0	1	0	1	0	1	0
	MC2	T1T2T3	2nd Op Code Address	2nd Op Code	0	1	0	1	0	1	1
	MC3	T1T2T3	1st operand Address	m	0	1	0	1	1	1	1
	MC4	Ti	*	Z	1	1	1	1	1	1	1
	MC5	T1T2T3	m to A0~A7 00H to A8~A15	g	1	0	1	0	1	1	1

Table 51. Bus and Control Signal Condition in Each Machine Cycle (Continued)

Instruction	Machine Cycle	States	Address	Data	$\overline{RD}$	$\overline{WR}$	$\overline{MREQ}$	$\overline{IORQ}$	$\overline{M1}$	$\overline{HALT}$	ST
OTIM** OTDM**	MC1	T1T2T3	1st Op Code Address	1st Op Code	0	1	0	1	0	1	0
	MC2	T1T2T3	2nd Op Code Address	2nd Op Code	0	1	0	1	0	1	1
	MC3	Ti	*	Z	1	1	1	1	1	1	1
	MC4	T1T2T3	HL	DATA	0	1	0	1	1	1	1
	MC5	T1T2T3	C to A0~A7 00H to A8~A15	DATA	1	0	1	0	1	1	1
	MC6	Ti	*	Z	1	1	1	1	1	1	1
OTIMR** OTDMR** (If Br≠0)	MC1	T1T2T3	1st Op Code Address	1st Op Code	0	1	0	1	0	1	0
	MC2	T1T2T3	2nd Op Code Address	2nd Op Code	0	1	0	1	0	1	1
	MC3	Ti	*	Z	1	1	1	1	1	1	1
	MC4	T1T2T3	HL	DATA	0	1	0	1	1	1	1
	MC5	T1T2T3	C to A0~A7 00H to A8~A15	DATA	1	0	1	0	1	1	1
	MC6~MC8	TiTiTi	*	Z	1	1	1	1	1	1	1

Table 51. Bus and Control Signal Condition in Each Machine Cycle (Continued)

Instruction	Machine Cycle	States	Address	Data	$\overline{RD}$	$\overline{WR}$	$\overline{MREQ}$	$\overline{IORQ}$	$\overline{M1}$	$\overline{HALT}$	ST
OTIMR** OTDMR** (if Br= 0)	MC1	T1T2T3	1st Op Code Address	1st Op Code	0	1	0	1	0	1	0
	MC2	T1T2T3	2nd Op Code Address	2nd Op Code	0	1	0	1	0	1	1
	MC3	Ti	*	Z	1	1	1	1	1	1	1
	MC4	T1T2T3	HL	DATA	0	1	0	1	1	1	1
	MC5	T1T2T3	C to A0~A7 00H to A8~A15	DATA	1	0	1	0	1	1	1
	MC6	Ti	*	Z	1	1	1	1	1	1	1
OUTI OUTD	MC1	T1T2T3	1st Op Code Address	1st Op Code	0	1	0	1	0	1	0
	MC2	T1T2T3	2nd Op Code Address	2nd Op Code	0	1	0	1	0	1	1
	MC3	T1T2T3	HL	DATA	0	1	0	1	1	1	1
	MC4	T1T2T3	BC	DATA	1	0	1	0	1	1	1
OTIR OTDR (If Br`≠ 0)	MC1	T1T2T3	1st Op Code Address	1st Op Code	0	1	0	1	0	1	0
	MC2	T1T2T3	2nd Op Code Address	2nd Op Code	0	1	0	1	0	1	1
	MC3	T1T2T3	HL	DATA	0	1	0	1	1	1	1
	MC4	T1T2T3	BC	DATA	1	0	1	0	1	1	1
	MC5~MC6	TiTi	*	Z	1	1	1	1	1	1	1

Table 51. Bus and Control Signal Condition in Each Machine Cycle (Continued)

Instruction	Machine Cycle	States	Address	Data	$\overline{RD}$	$\overline{WR}$	$\overline{MREQ}$	$\overline{IORQ}$	$\overline{M1}$	$\overline{HALT}$	ST
OTIR OTDR (if Br=0)	MC1	T1T2T3	1st Op Code Address	1st Op Code	0	1	0	1	0	1	0
	MC2	T1T2T3	2nd Op Code Address	2nd Op Code	0	1	0	1	0	1	1
	MC3	T1T2T3	HL	DATA	0	1	0	1	1	1	1
	MC4	T1T2T3	BC	DATA	1	0	1	0	1	1	1
POP zz	MC1	T1T2T3	1st Op Code Address	1st Op Code	0	1	0	1	0	1	0
	MC2	T1T2T3	SP	DATA	0	1	0	1	1	1	1
	MC3	T1T2T3	SP+1	DATA	0	1	0	1	1	1	1
POP IX POP IY	MC1	T1T2T3	1st Op Code Address	1st Op Code	0	1	0	1	0	1	0
	MC2	T1T2T3	2nd Op Code Address	2nd Op Code	0	1	0	1	0	1	1
	MC3	T1T2T3	SP	DATA	0	1	0	1	1	1	1
	MC4	T1T2T3	SP+1	DATA	0	1	0	1	1	1	1
PUSH zz	MC1	T1T2T3	1st Op Code Address	1st Op Code	0	1	0	1	0	1	0
	MC2 ~MC3	TiTi	*	Z	1	1	1	1	1	1	1
	MC4	T1T2T3	SP-1	zzH	1	0	0	1	1	1	1
	MC5	T1T2T3	SP-2	zzL	1	0	0	1	1	1	1

Table 51. Bus and Control Signal Condition in Each Machine Cycle (Continued)

Instruction	Machine Cycle	States	Address	Data	$\overline{RD}$	$\overline{WR}$	$\overline{MREQ}$	$\overline{IORQ}$	$\overline{M1}$	$\overline{HALT}$	ST
PUSH IX PUSH IY	MC1	T1T2T3	1st Op Code Address	1st Op Code	0	1	0	1	0	1	0
	MC2	T1T2T3	2nd Op Code Address	2nd Op Code	0	1	0	1	0	1	1
	MC3~MC4	TiTi	*	Z	1	1	1	1	1	1	1
	MC5	T1T2T3	SP-1	IXH IYH	1	0	0	1	1	1	1
	MC6	T1T2T3	SP-2	IXL IYL	1	0	0	1	1	1	1
RET	MC1	T1T2T3	1st Op Code Address	1st Op Code	0	1	0	1	0	1	0
	MC2	T1T2T3	SP	DATA	0	1	0	1	1	1	1
	MC3	T1T2T3	SP+1	DATA	0	1	0	1	1	1	1
RET f (If condition is false)	MC1	T1T2T3	1st Op Code Address	1st Op Code	0	1	0	1	0	1	0
	MC2~MC3	TiTi	*	Z	1	1	1	1	1	1	1
RET f (If condition is true)	MC1	T1T2T3	1st Op Code Address	1st Op Code	0	1	0	1	0	1	0
	MC2	Ti	*	Z	1	1	1	1	1	1	1
	MC3	T1T2T3	SP	DATA	0	1	0	1	1	1	1
	MC4	T1T2T3	SP+1	DATA	0	1	0	1	1	1	1
RETI (R0, R1) RETN	MC1	T1T2T3	1st Op Code Address	1st Op Code	0	1	0	1	0	1	0
	MC2	T1T2T3	2nd Op Code Address	2nd Op Code	0	1	0	1	0	1	1
	MC3	T1T2T3	SP	DATA	0	1	0	1	1	0	1
	MC4	T1T2T3	SP+1	DATA	0	1	0	1	1	1	1

Table 51. Bus and Control Signal Condition in Each Machine Cycle (Continued)

Instruction	Machine Cycle	States	Address	Data	$\overline{RD}$	$\overline{WR}$	$\overline{MREQ}$	$\overline{IORQ}$	$\overline{M1}$	$\overline{HALT}$	ST
RETI (Z)	MC1	T1T2T3	1st Op Code Address	1st Op Code	0	1	0	1	0*5 1	1	0
	MC2	T1T2T3	2nd Op Code Address	2nd Op Code	0	1	0	1	0*5 1	1	1
	MC3 ~MC5	TiTiTi	*	Z	1	1	1	1	1*5 1	1	1
	MC6	T1T2T3	1st Op Code Address	1st Op Code	0	1	0	1	0*5 0	1	1
	MC7	Ti	*	Z	1	1	1	1	1*5 1	1	1
	MC8	T1T2T3	2nd Op Code Address	2nd Op Code	0	1	0	1	0*5 0	1	1
	MC9	T1T2T3	SP	data	0	1	0	1	1*5 1	1	1
	MC10	T1T2T3	SP+1	data	0	1	0	1	1*5 1	1	1
RLCA RLA RRCA RRA	MC1	T1T2T3	1st Op Code Address	1st Op Code	0	1	0	1	0	1	0
RLC g RL g	MC1	T1T2T3	1st Op Code Address	1st Op Code	0	1	0	1	0	1	0
RRC g RR g SLA g SRA g SRL g	MC2	T1T2T3	2nd Op Code Address	2nd Op Code	0	1	0	1	0	1	1
	MC3	Ti	*	Z	1	1	1	1	1	1	1

*5 The upper and lower data show the state of $\overline{M1}$ when $\overline{IOC}$ = 1 and $\overline{IOC}$ = 0 respectively.

Table 51. Bus and Control Signal Condition in Each Machine Cycle (Continued)

Instruction	Machine Cycle	States	Address	Data	$\overline{RD}$	$\overline{WR}$	$\overline{MREQ}$	$\overline{IORQ}$	$\overline{M1}$	$\overline{HALT}$	ST
RLC (HL) RL (HL) RRC (HL) RR (HL) SLA (HL) SRA (HL) SRL (HL)	MC1	T1T2T3	1st Op Code Address	1st Op Code	0	1	0	1	0	1	0
	MC2	T1T2T3	2nd Op Code Address	2nd Op Code	0	1	0	1	0	1	1
	MC3	T1T2T3	HL	DATA	0	1	0	1	1	1	1
	MC4	Ti	*	Z	1	1	1	1	1	1	1
	MC5	T1T2T3	HL	DATA	1	0	0	1	1	1	1
RLC (IX + d) RLC (IY + d) RL (IX + d) RL (IY + d) RRC (IX + d) RRC (IY + d) RR (IX + d) RR (IY + d) SLA (IX + d) SLA (IY + d) SRA (IX + d) SRA (IY + d) SRL (IX + d) SRL (IY + d)	MC1	T1T2T3	1st Op Code Address	1st Op Code	0	1	0	1	0	1	0
	MC2	T1T2T3	2nd Op Code Address	2ndOp Code	0	1	0	1	0	1	1
	MC3	T1T2T3	1st operand Address	d	0	1	0	1	1	1	1
	MC4	T1T2T3	3rd Op Code Address	3rd Op Code	0	1	0	1	0	1	1
	MC5	T1T2T3	IX+d IY+d	DATA	0	1	0	1	1	1	1
	MC6	Ti	*	Z	1	1	1	1	1	1	1
	MC7	T1T2T3	IX+d IY+d	DATA	1	0	0	1	1	1	1
RLD RRD	MC1	T1T2T3	1st Op Code Address	1st Op Code	0	1	0	1	0	1	0
	MC2	T1T2T3	2nd Op Code Address	2nd Op Code	0	1	0	1	0	1	1
	MC3	T1T2T3	HL	DATA	0	1	0	1	1	1	1
	MC4~MC7	TiTiTiTi *		Z	1	1	1	1	1	1	1
	MC8	T1T2T3	HL	DATA	1	0	0	1	1	1	1

Table 51. Bus and Control Signal Condition in Each Machine Cycle (Continued)

Instruction	Machine Cycle	States	Address	Data	$\overline{RD}$	$\overline{WR}$	$\overline{MREQ}$	$\overline{IORQ}$	$\overline{M1}$	$\overline{HALT}$	ST
RST v	MC1	T1T2T3	1st Op Code Address	1st Op Code	0	1	0	1	0	1	0
	MC2 ~MC3	TiTi	*	Z	1	1	1	1	1	1	1
	MC4	T1T2T3	SP-1	PCH	1	0	0	1	1	1	1
	MC5	T1T2T3	SP-2	PCL	1	0	0	1	1	1	1
SCF	MC1	T1T2T3	1st Op Code Address	1st Op Code	0	1	0	1	0	1	0
SET b,g RES b,g	MC1	T1T2T3	1st Op Code Address	1st Op Code	0	1	0	1	0	1	0
	MC2	T1T2T3	2nd Op Code Address	2nd Op Code	0	1	0	1	0	1	1
	MC3	Ti	*	Z	1	1	1	1	1	1	1
SET b. (HL) RES b, (HL)	MC1	T1T2T3	1st Op Code Address	1st Op Code	0	1	0	1	0	1	0
	MC2	T1T2T3	2nd Op Code Address	2ndOp Code	0	1	0	1	0	1	1
	MC3	T1T2T3	HL	DATA	0	1	0	1	1	1	1
	MC4	Ti	*	Z	1	1	1	1	1	1	1
	MC5	T1T2T3	HL	DATA	1	0	0	1	1	1	1

Table 51. Bus and Control Signal Condition in Each Machine Cycle (Continued)

Instruction	Machine Cycle	States	Address	Data	$\overline{RD}$	$\overline{WR}$	$\overline{MREQ}$	$\overline{IORQ}$	$\overline{M1}$	$\overline{HALT}$	ST
SET b, (IX+d) SET b, (IY+d) RES b, (IX+d) RES b, (IY+d)	MC1	T1T2T3	1st Op Code Address	1st Op Code	0	1	0	1	0	1	0
	MC2	T1T2T3	2nd Op Code Address	2nd Op Code	0	1	0	1	0	1	1
	MC3	T1T2T3	1st operand Address	d	0	1	0	1	1	1	1
	MC4	T1T2T3	3rd Op Code Address	3rd Op Code	0	1	0	1	0	1	1
	MC5	T1T2T3	IX+d IY+d	DATA	0	1	0	1	1	1	1
	MC6	Ti	*	Z	1	1	1	1	1	1	1
	MC7	T1T2T3	IX+ d IY+d	DATA	1	0	0	1	1	1	1
SLP**	MC1	T1T2T3	1st Op Code Address	1stOp Code	0	1	0	1	0	1	0
	MC2	T1T2T3	2nd Op Code Address	2nd Op Code	0	1	0	1	0	1	1
	—	—	7FFFFH	Z	1	1	1	1	1	0	1
TSTIO m**	MC1	T1T2T3	1st Op Code Address	1st Op Code	0	1	0	1	0	1	0
	MC2	T1T2T3	2nd Op Code Address	2nd Op Code	0	1	0	1	0	1	1
	MC3	T1T2T3	1st operand Address	m	0	1	0	1	1	1	1
	MC4	T1T2T3	C to A0~A7 00H to A8~A15	DATA	0	1	1	0	1	1	1

Table 51. Bus and Control Signal Condition in Each Machine Cycle (Continued)

Instruction	Machine Cycle	States	Address	Data	$\overline{RD}$	$\overline{WR}$	$\overline{MREQ}$	$\overline{IORQ}$	$\overline{M1}$	$\overline{HALT}$	ST
TST g**	MC1	T1T2T3	1st Op Code Address	1st Op Code	0	1	0	1	0	1	0
	MC2	T1T2T3	2nd Op Code Address	2nd Op Code	0	1	0	1	0	1	1
	MC3	Ti	*	Z	1	1	1	1	1	1	1
TST m**	MC1	T1T2T3	1st Op Code Address	1st Op Code	0	1	0	1	0	1	0
	MC2	T1T2T3	2nd Op Code Address	2nd Op Code	0	1	0	1	0	1	1
	MC3	T1T2T3	1st operand Address	m	0	1	0	1	1	1	1
TST (HL)**	MC1	T1T2T3	1st Op Code Address	1st Op Code	0	2	0	2	0	2	0
	MC2	T1T2T3	2nd Op Code Address	2nd Op Code	0	1	0	1	0	1	1
	MC3	Ti	*	Z	1	1	1	1	1	1	1
	MC4	T1T23	HL	Data	0	1	0	1	1	1	1

INTERRUPTS

Table 52. Interrupts

Instruction	Machine Cycle	States	Address	Data	$\overline{RD}$	$\overline{WR}$	$\overline{MREQ}$	$\overline{IORQ}$	$\overline{M1}$	$\overline{HALT}$	ST
$\overline{NMI}$	MC1	T1T2T3	Next Op Code Address (PC)		0	1	0	1	0	1	0
	MC2 ~MC3	T1T1	*	Z	1	1	1	1	1	1	1
	MC4	T1T2T3	SP-1	PCH	1	0	0	1	1	1	1
	MC5	T1T2T3	SP-2	PCL	1	0	0	1	1	1	1
$\overline{INT0}$ Mode 0 (RST Inserted)	MC1	T1T2TW TWT3	Next Op Code Address	1st(PC) Op Code	1	1	1	0	0	1	0
	MC2 ~MC3	T1T1	*	Z	1	1	1	1	1	1	1
	MC4	T1T2T3	SP-1	PCH	1	0	0	1	1	1	1
	MC5	T1T2T3	SP-2	PCL	1	0	0	1	1	1	1
$\overline{INT0}$ Mode 0 (Call Inserted)	MC1	T1T2Tw TWT3	Next Op Code Address (PC)	1st Op Code	1	1	1	0	0	1	0
	MC2	T1T2T3	PC	n	0	1	0	1	1	1	1
	MC3	T1T2T3	PC+1	m	0	1	0	1	1	1	1
	MC4	Ti	*	Z	1	1	1	1	1	1	1
	MC5	T1T2T3	SP-1	PC+2(H)	1	0	0	1	1	1	1
	MC6	T1T2T3	SP-2	PC+2(L)	1	0	0	1	1	1	1
$\overline{INT0}$ Mode 1	MC1	T1T2TW TWT3	Next Op Code Address (PC)		1	1	1	0	0	1	0
	MC2	T1T2T3	SP-1	PCH	1	0	0	1	1	1	1
	MC3	T1T2T3	SP-2	PCL	1	0	0	1	1	1	1

Table 52. Interrupts (Continued)

Instruction	Machine Cycle	States	Address	Data	$\overline{RD}$	$\overline{WR}$	$\overline{MREQ}$	$\overline{IORQ}$	$\overline{M1}$	$\overline{HALT}$	ST
$\overline{INT0}$ Mode 2	MC1	T1T2TW TWT3	Next Op Code Address (PC)	Vector	1	1	1	0	0	1	0
	MC2	Ti	*	Z	1	1	1	1	1	1	1
	MC3	T1T2T3	SP-1	PCH	1	0	0	1	1		1
	MC4	T1T2T3	SP-2	PCL	1	0	0	1	1	1	1
	MC5	T1T2T3	I, Vector	DATA	0	1	0	1	1	1	1
	MC6	T1T2T3 T1T2,TW	I, Vector+1	DATA	0	1	0	1	1	1	1
$\overline{INT1}$ $\overline{INT2}$ Internal Interrupts	MC1	T1T2,TW TWT3	Next Op Code Address (PC)		1	1	1	1	1	1	0
	MC2	Ti	*	Z	1	1	1	1	1	1	1
	MC3	T1T2T3	SP-1	PCH	1	0	0	1	1	1	1
	MC4	T1T2T3	SP-2	PCL	1	0	0	1	1	1	1
	MC5	T1T2T3	I, Vector	DATA	0	1	0	1	1	1	1
	MC6	T1T2T3	I, Vector+1	DATA	0	1	0	1	1	1	1

Operating Modes Summary

REQUEST ACCEPTANCES IN EACH OPERATING MODE

Table 53. Request Acceptances in Each Operating Mode

Request \ Current Status		Normal Operation (CPU mode and IOSTOP Mode)	WAIT State	Refresh Cycle	Interrupt Acknowledge Cycle	DMA Cycle	BUS RELEASE Mode	SLEEP Mode	SYSTEM STOP Mode
$\overline{\text{WAIT}}$		Acceptable	Acceptable	Not acceptable	Acceptable	Acceptable	Not acceptable	Not acceptable	Not acceptable
Refresh Request Request of Refresh by the on-chip Refresh Controller		Refresh cycle begins at the end of Machine Cycle (MC)	Not acceptable	Not acceptable	Refresh cycle begins at the end MC	Refresh cycle begins at the end of MC	Not acceptable	Not acceptable	Not acceptable
$\overline{\text{DREQ0}}$ $\overline{\text{DREQ1}}$		DMA cycle begins at the end of MC	DMA cycle begins at the end of MC	Acceptable Refresh cycle precedes. DMA cycle begins at the end of one MC	Acceptable DMA cycle begins at the end of MC.	Acceptable Refer to "DMA Controller" for details.	Acceptable *After BUS RELEASE cycle, DMA cycle begins at the end of one MC	Not acceptable	Not acceptable
$\overline{\text{BUSREQ}}$		Bus is released at the end of MC	Not acceptable	Not acceptable	Bus is released at the end of MC	Bus is released at the end of MC	Continue BUS RELEASE mode	Acceptable	Acceptable
Interrupt	$\overline{\text{INT0}}$, $\overline{\text{INT1}}$, $\overline{\text{1NT2}}$	Accepted after executing the current instruction.	Accepted after executing the current instruction	Not acceptable	Not acceptable	Not acceptable	Not acceptable	Acceptable Return from SLEEP mode to normal operation.	Acceptable Return from SYSTEM STOP mode to normal operation

Table 53. Request Acceptances in Each Operating Mode

Request	Current Status	Normal Operation (CPU mode and IOSTOP Mode)	WAIT State	Refresh Cycle	Interrupt Acknowledge Cycle	DMA Cycle	BUS RELEASE Mode	SLEEP Mode	SYSTEM STOP Mode
	Internal I/O Interrupt	-	-	-	-	-	-	-	Not acceptable
	$\overline{\text{NMI}}$	-	-	-	Not acceptable Interrupt acknowledge cycle precedes. $\overline{\text{NMI}}$ is accepted after executing	Acceptable DMA cycle stops			Acceptable Return from SYSTEM STOP mode to normal operation

Note: * Not acceptable when DMA Request is in level-sense.
-: Same as above.
MC: Machine Cycle

REQUEST PRIORITY

The Z80180 features three types of requests.

Table 54. The Z80180 Types of Requests

Type 1	Accepted in specified state	WAIT
Type 2	Accepted in each machine cycle	Refresh Request, DMA Request, and Bus Request.
Type 3	Accepted in each instruction	Interrupt Request

Type 1, Type 2, and Type 3 requests priority as follows.

- Highest priority Type 1 > Type 2 > Type 3 lowest priority
- Each request priority in Type 2 is shown as follows. highest priority Bus Req. > Refresh Req. > DMA Request lowest priority

Note: If Bus Request and Refresh Request occur simultaneously, Bus Request is accepted but Refresh Request is cleared.

OPERATION MODE TRANSITION

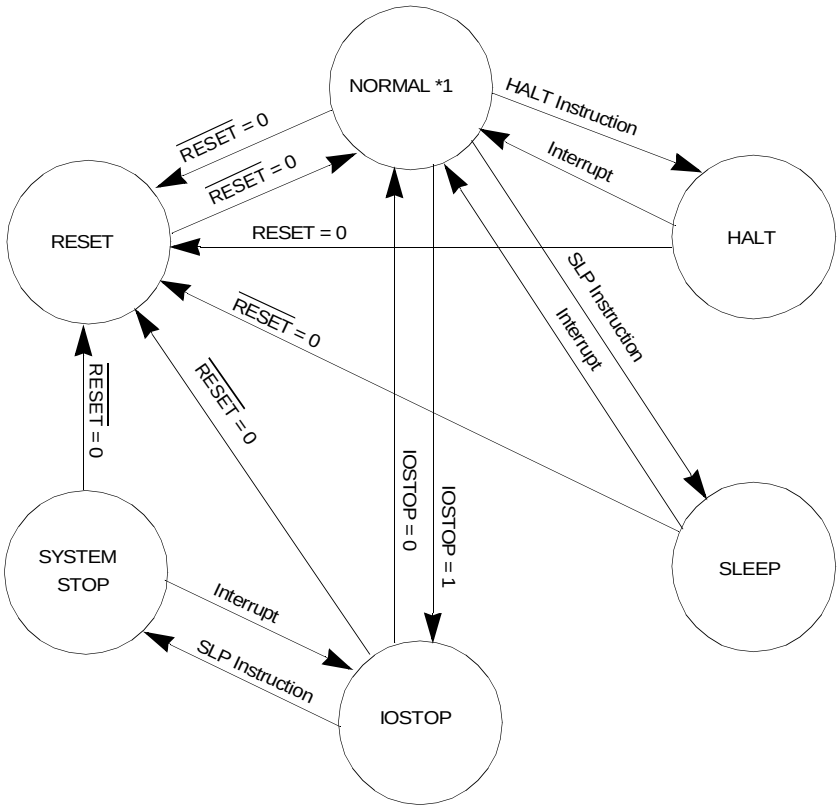

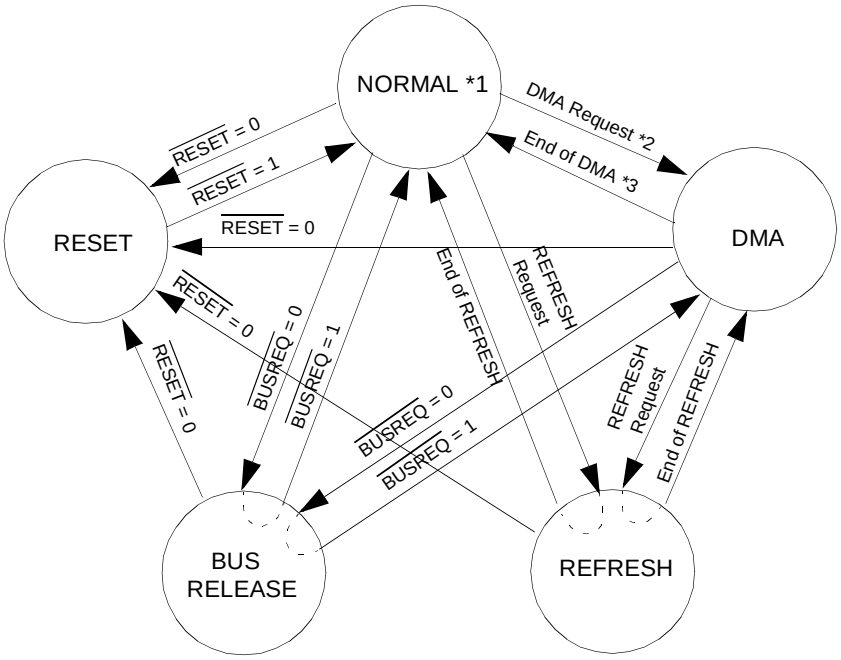

Figure 94. Operation Mode Transition

* 1. NORMAL: CPU executes instructions normally in NORMALmode.

* 2. DMA request: DMA is requested in the following cases.
  - $\overline{DREQ0}$, $\overline{DREQ1}$ = 0
    memory to/from (memory mapped) I/0 DMA transfer
  - b. DEO = 1 (memory to/from memory DMA transfer)

* 3. DMA end: DMA ends in the following cases:

– $\overline{\text{DREQ0}}$, $\overline{\text{DREQ1}}$ = 1
memory to/from (memory mapped)
I/O DMA transfer
– BCR0, BCR1 = `0000H` (all DMA transfers)
– $\overline{\text{NMI}}$ = 0 (all DMA transfers)

OTHER OPERATION MODE TRANSITIONS

The following operation mode transitions are also possible.

1. HALT ⇄ { DMA, REFRESH, BUS RELEASE }

   IOSTOP ⇄ { DMA, REFRESH, BUS RELEASE }

2. SLEEP ⇄ BUS RELEASE

   SYSTEM STOP ⇄ BUS RELEASE

Status Signals

PIN OUTPUTS IN EACH OPERATING MODE

Table 55 describes pin outputs in each operating mode.

Table 55. Pin Outputs in Each Operating Mode

Mode		$\overline{M1}$	$\overline{MREQ}$	$\overline{IORQ}$	$\overline{RD}$	$\overline{WR}$	$\overline{RFSH}$	$\overline{HALT}$	$\overline{BUSACK}$	ST	Address BUS	Data BUS
CPU Operation	Op Code Fetch (1st Op Code)	0	0	1	0	1	1	1	1	0	A	IN
	Op Code Fetch (except 1 st Op Code)	0	0	1	0	1	1	1	1	1	A	IN
	MemRead	1	0	1	0	1	1	1	1	1	A	IN
	Memory Write	1	0	1	1	0	1	1	1	1	A	OUT
	I/O Read	1	1	0	0	1	1	1	1	1	A	IN
	I/O Write	1	1	0	1	0	1	1	1	1	A	OUT
	Internal Operation	1	1	1	1	1	1	1	1	1	A	IN
Refresh		1	0	1	1	1	0	1	1	*	A	IN
Interrupt Acknowledge Cycle (1st Machine Cycle)	$\overline{NMI}$	0	0	1	0	1	1	1	1	0	A	IN
	$\overline{INT0}$	0	1	0	1	1	1	1	1	0	A	IN
	$\overline{INT1}$, $\overline{INT2}$ & Internal Interrupts	1	1	1	1	1	1	1	1	0	A	IN
BUS RELEASE		1	Z	Z	Z	Z	1	1	0	*	Z	IN
HALT		0	0	1	0	1	1	0	1	0	A	IN
SLEEP		1	1	1	1	1	1	0	1	1	1	IN

Table 55. Pin Outputs in Each Operating Mode (Continued)

Mode		$\overline{M1}$	$\overline{MREQ}$	$\overline{IORQ}$	$\overline{RD}$	$\overline{WR}$	$\overline{RFSH}$	$\overline{HALT}$	$\overline{BUSACK}$	ST	Address BUS	Data BUS
Internal DMA	Memory Read	1	0	1	0	1	1	*	1	0	A	IN
	Memory Write	1	0	1	1	0	1	*	1	0	A	OUT
	I/O Read	1	1	0	0	1	1	*	1	0	A	IN
	I/O Write	1	1	0	1	0	1	*	1	0	A	OUT
RESET		1	1	1	1	1	1	1	1	1	Z	IN

- 1 : High
- 0 : Low
- A : Programmable
- Z : High Impedance
- IN : Input
- OUT : Output
- * : Invalid

PIN STATUS

Tables 56 describes the status of each ping during RESET and LOW POWER OPERATION modes.

Table 56. Pin Status During RESET and LOW POWER OPERATION Modes

Symbol	Pin Function	Pin Status in Each Operation Mode			
		RESET	SLEEP	IOSTOP	SYSTEM STOP
$\overline{\text{WAIT}}$	—	IN (N)	IN (N)	IN (A)	IN (N)
$\overline{\text{BUSACK}}$	—	1	OUT	OUT	OUT
$\overline{\text{BUSREQ}}$	—	IN (N)	IN (A)	IN (A)	IN (A)
$\overline{\text{RESET}}$	—	0	IN (A)	IN (A)	IN (A)
$\overline{\text{NMI}}$	—	IN (N)	IN (A)	IN (A)	IN (A)
$\overline{\text{INT}}_0$	—	IN (N)	IN (A)	IN (A)	IN (A)
$\overline{\text{INT}}_1$	—	IN (N)	IN (A)	IN (A)	IN (A)
$\overline{\text{INT}}_2$	—	IN (N)	IN (A)	IN (A)	IN (A)
ST	—	1	1	OUT	1
A0–A17, A19	—	Z	1	A	1
A18/TOUT	A18	Z	1	A	1
	TOUT	Z	OUT	H	H
D0–D7	—	Z	Z	A	Z
$\overline{\text{RTS}}$0	—	1	H	OUT	H
$\overline{\text{CTS}}$0	—	IN (N)	IN (A)	IN (N)	N (N)
$\overline{\text{DCD}}$0	—	IN (N)	IN (A)	IN (N)	IN (N)
TXA0	—	1	OUT	H	H
RXA0	—	IN (N)	IN (A)	IN (N)	IN (N)
CKA0/$\overline{\text{DREQ}}$0	CKA0 (Internal Clock Mode)	Z	OUT	Z	Z

Table 56. Pin Status During RESET and LOW POWER OPERATION Modes (Continued)

Symbol	Pin Function	Pin Status in Each Operation Mode			
		RESET	SLEEP	IOSTOP	SYSTEM STOP
	CKA0 (External Clock Mode)	Z	IN (A)	IN (N)	IN (N)
	$\overline{DREQ0}$	Z	IN (N)	IN (A)	IN (N)
TXA1	—	1	OUT	H	H
RXA1	—	IN (N)	IN (A)	IN (N)	IN (N)
CKA1/$\overline{TEND0}$	CKA1 (Internal Clock Mode)	Z	OUT	Z	Z
	CKA1 (External Clock Mode)	Z	IN (A)	IN (N)	IN (N)
	$\overline{TEND0}$	Z	1	OUT	1
TXS	—	1	OUT	H	H
RXS/$\overline{CTS}_1$	RXS	IN (N)	IN (A)	IN (N)	IN (N)
	$\overline{CTS1}$	IN (N)	IN (A)	IN (N)	IN (N)
CKS	CKS (Internal Clock Mode)	Z	OUT	1	1
	CKS (External Clock Mode)	Z	IN (A)	Z	Z
$\overline{DREQ}_1$	—	IN (N)	IN (N)	IN (A)	IN (N)
$\overline{TEND}_1$	—	1	1	OUT	1
$\overline{HALT}$	—	1	0	OUT	0
$\overline{RFSH}$	—	1	1	OUT	1
$\overline{IORQ}$	—	1	1	OUT	1

Table 56. Pin Status During RESET and LOW POWER OPERATION Modes (Continued)

Symbol	Pin Function	Pin Status in Each Operation Mode			
		RESET	SLEEP	IOSTOP	SYSTEM STOP
$\overline{\text{MREQ}}$	—	1	1	OUT	1
E	—	0	E Clock Output	←	←
$\overline{\text{M1}}$	—	1	1	OUT	1
$\overline{\text{WR}}$	—	1	1	OUT	1
$\overline{\text{RD}}$	—	1	1	OUT	1
Phi	—	Phi Clock Output	←	←	←

- 1: HIGH 0: LOW A: Programmable Z: High Impedance
- IN (A): Input (Active) IN (N): Input (Not active) OUT: Output
- H: Holds the previous state
- ←: same as the left

I/O Registers

INTERNAL I/O REGISTERS

By programming IOA7 and IOA6 as the I/O control register, internal I/O register addresses are relocatable within ranges from `0000H` to `00FFH` in the I/O address space.

Table 57. Internal I/O Registers

Register	Mnemonics	Address		Remarks
ASCI Control Register A Channel 0:	CNTLA0	0	0	
ASCI Control Register A Channel 1:	CNTLA1	0	1	

bit	MPE	RE	TE	$\overline{\text{RTS0}}$	MPBR/ EFR	MOD2	MOD1	MOD0
during RESET	0	0	0	1	invalid	0	0	0
R/W	R/W	R/W	R/W	R/W	R/W	R/W	R/W	R/W

MODE Selection
Multi Processor Bit Receive/ Error Flag Reset
Request to Send
Transmit Enable
Receive Enable
Multi Processor Enable

bit	MPE	RE	TE	CKA1D	MPBR/ EFR	MOD2	MOD1	MOD0
during RESET	0	0	0	1	invalid	0	0	0
R/W	R/W	R/W	R/W	R/W	R/W	R/W	R/W	R/W

MODE Selection
Multi Processor Bit Receive/ Error Flag Reset
CKA1 Disable
Transmit Enable
Receive Enable
Multi Processor Enable

MOD 2	1	0	
0	0	0	Start + 7 bit Data + 1 Stop
0	0	1	Start + 7 bit Data + 2 Stop
0	1	0	Start + 7 bit Data + Parity + 1 Stop
0	1	1	Start + 7 bit Data + Parity + 2 Stop
1	0	0	Start + 8 bit Data + 1 Stop
1	0	1	Start + 8 bit Data + 2 Stop
1	1	0	Start + 8 bit Data + Parity + 1 Stop
1	1	1	Start + 8 bit Data + Parity + 2 Stop

Table 57. Internal I/O Registers (Continued)

Register	Mnemonics	Address		Remarks
ASCI Control Register B Channel 0:	CNTLB0	0	2	

bit	MPBT	MP	$\overline{CTS}$/PS	PEO	DR	SS2	SS1	SS0
during RESET	invalid	0	*	0	0	1	1	1
R/W	R/W	R/W	R/W	R/W	R/W	R/W	R/W	R/W

Clock Source and Speed Select
Divide Ratio
Parity Even or Odd
Clear to send/Prescale
Multi Processor
Multi Processor Bit Transmit

* $\overline{CTS}$: Depending on the condition 0f $\overline{CTS}$ Pin.
PS: Cleared to 0.

ASCI Control Register B Channel 1:	CNTLB1	0	3	

bit	MPBT	MP	$\overline{CTS}$/PS	PEO	DR	SS2	SS1	SS0
during RESET	invalid	0	0	0	0	1	1	1
R/W	R/W	R/W	R/W	R/W	R/W	R/W	R/W	R/W

Clock Source and Speed Select
Divide Ratio
Parity Even or Odd
Clear to Send/Prescale
Multi Processor
Multi Processor Bit Transmit

General divide ratio	PS=0 (divide ratio=10)		PS=1 (divide ratio=30)	
SS2 1 0	DR=0 (X 16)	DR=1 (X 64)	DR=0 (X 16)	DR=1 (X 64)
0 0 0	f ÷ 160	f ÷ 640	f ÷ 480	f ÷ 1920
0 0 1	÷ 320	÷ 1280	÷ 960	÷ 3840
0 1 0	÷ 640	÷ 2560	÷ 1920	÷ 7680
0 1 1	÷ 1280	÷ 5120	÷ 3840	÷ 15360
1 0 0	÷ 2560	÷ 10240	÷ 7680	÷ 30720
1 0 1	÷ 5120	÷ 20480	÷ 15360	÷ 61440
1 1 0	÷ 10240	÷ 40960	÷ 30720	÷ 122880
1 1 1	External clock (frequency < f ÷ 40)			

Table 57. Internal I/O Registers (Continued)

Register	Mnemonics	Address		Remarks
ASCI Status Channel 0:	STAT0	0	4	

bit	RDRF	OVRN	PE	FE	RIE	$\overline{DCD0}$	TDRE	TIE
during RESET	0	0	0	0	invalid	*	**	0
R/W	R	R	R	R	R/W	R	R	R/W

TIE: Transmit Interrupt Enable
TDRE: Transmit Data Register Empty
$\overline{DCD0}$: Data Carrier Detect
RIE: Receive Interrupt Enable
FE: Framing Error
PE: Parity Error
OVRN: Overrun Error
RDRF: Receive Data Register Full

** $\overline{CTS}_0$ Pin	TDRE
L	1
H	0

* $\overline{DCD}_0$: Depending on the condition of $\overline{DCD}_0$ Pin.

ASCI Status Channel 1:	STAT1	0	5

bit	RDRF	OVRN	PE	FE	RIE	CTS1E	TDRE	TIE
during RESET	0	0	0	0	0	0	1	0
R/W	R	R	R	R	R/W	R	R	R/W

TIE: Transmit Interrupt Enable
TDRE: Transmit Data Register Empty
CTS1E: $\overline{CTS1}$ Enable
RIE: Receive Interrupt Enable
FE: Framing Error
PE: Parity Error
OVRN: Overrun Error
RDRF: Receive Data Register Full

Table 57. Internal I/O Registers (Continued)

Register	Mnemonics	Address		Remarks
ASCI Transmit Data Register Channel 0:	TDR0	0	6	
ASCI Transmit Data Register Channel 1:	TDR1	0	7	
ASCI Receive Data Register Channel 0:	TSR0	0	8	
ASCI Receive Data Register Channel 1:	TSR1	0	9	
CSI/O Control Register:	CNTR	0	A	

bit	EF	EIE	RE	TE	—	SS2	SS1	SS0
during RESET	0	0	0	0	1	1	1	1
R/W	R	R/W	R/W	R/W		R/W	R/W	R/W

Speed Select

Transmit Enable

Receive Enable

End Interrupt Enable

End Flag

SS2 1 0	Baud Rate	SS2 1 0	Baud Rate
0 0 0	Phi ÷ 20	1 0 0	Phi ÷ 320
0 0 1	÷ 40	1 0 1	÷ 640
0 1 0	÷ 80	1 1 0	÷ 1280
0 1 1	÷ 160	1 1 1	External frequency <÷ 20)

Table 57. Internal I/O Registers (Continued)

Register	Mnemonics	Address		Remarks
CSI/O Transmit/ Receive Data Register:	TRDR	0	B	
Timer Data Register Channel 0L:	TMDR0L	0	C	
Timer Data Register Channel 0H:	TMDR0H	0	D	
Timer Reload Register Channel 0L:	RLDR0L	0	E	
Timer Reload Register Channel 0H:	RLDR0H	0	F	
Timer Control Register Channel 0L:	TCR	1	0	

bit	TF1	TF0	TE1	TE0	TOC1	TOC0	TDE1	TDE0
during RESET	0	0	0	0	0	0	0	0
R/W	R	R	R/W	R/W	R/W	R/W	R/W	R/W

Timer Down Count Enable 1,0

Timer Output Control 1,0

Timer Interrupt Enable 1,0

Timer Interrupt Flag 1,0

TOC1,0	A_{18}/TOUT
0 0	Inhibited
0 1	Toggle
1 0	0
1 1	1

Table 57. Internal I/O Registers (Continued)

Register	Mnemonics	Address		Remarks
Timer Data Register Channel 1L:	TMDR1L	1	4	
Timer Data Register Channel 1H:	TMDR1H	1	5	
Timer Reload Register Channel 1L	RLDR1L	1	6	
Timer Reload Register Channel 1H:	RLDR1H	1	7	
Free Running Counter:	FRC	1	8	Read only
DMA Source Address Register Channel 0L:	SAR0L	2	0	
DMA Source Address Register Channel 0H:	SAR0H	2	1	
DMA Source Address Register Channel 0B:	SAR0B	2	2	
DMA Destination Address Register Channel 0L:	DAR0L	2	3	
DMA Destination Address Register Channel 0H:	DAR0H	2	4	
DMA Destination Address Register Channel 0B:	DAR0B	2	5	
DMA Byte Count Register Channel 0L:	BCROL	2	6	
DMA Byte Count Register Channel 0H:	BCROH	2	7	
DMA Memory Address Register Channel 1L:	MAR1L	2	8	
DMA Memory Address Register Channel 1H:	MAR1H	2	9	

Bits 0-2 (3) are used for SAR0B

A_{19}*,	A_{18},	A_{17},	A_{16}	DMA Transfer Request
X	X	0	0	$\overline{DREQ_0}$ (external)
X	X	0	1	RDR0 (ASCI0)
X	X	1	0	RDR1 (ASCI1)
X	X	1	1	Not used

Bits 0-2 (3) are used for DAR0B

A_{19}*,	A_{18},	A_{17},	A_{16}	DMA Transfer Request
X	X	0	0	$\overline{DREQ_0}$ (external)
X	X	0	1	TDR0 (ASCI0)
X	X	1	0	TDR1 (ASCI1)
X	X	1	1	Not used

* In the R1 and Z mask, these DMAC registers are expanded from 4 bits to 3 bits in the package version of CP-68.

Table 57. Internal I/O Registers (Continued)

Register	Mnemonics	Address		Remarks
DMA Memory Address Register Channel 1B:	MAR1B	2	A	Bits 0 - 2 are used for MAR1B
DMA I/O Address Register Channel 1L:	IAR1L	2	B	
DMA I/O Address Register Channel 1H	IAR1H	2	C	
DMA Byte Count Register Channel 1L:	BCR1L	2	E	
DMA Byte Count Register Channel 1H:	BCR1H	2	F	
DMA Status Register:	DSTAT	3	0	
DMA Mode Register:	DMODE	3	1	

bit	DE1	DE0	$\overline{DWE1}$	$\overline{DWE0}$	DIE1	DIE0	—	DME
during RESET	0	0	1	1	0	0	1	0
R/W	R/W	R/W	W	W	R/W	R/W		R

DMA Master enable
DMA Interrupt Enable 1,0
DMA Enable Bit Write Enable 1,0
DMA enable ch 1,0

bit	—	—	DM1	DM0	SM1	SM0	MMOD	—
during RESET	1	1	0	0	0	0	0	1
R/W			R/W	R/W	R/W	R/W	R/W	

Memory MODE select
Ch 0 Source Mode 1,0
Ch 0 Destination Mode 1,0

DM1,0	Destination	Address
0 0	M	DAR0+1
0 1	M	DAR0-1
1 0	M	DAR0 fixed
1 1	I/O	DAR0 fixed

SM1,0	Source	Address
0 0	M	SAR0+1
0 1	M	SAR0-1
1 0	M	SAR0 fixed
1 1	I/O	SAR0 fixed

MMOD	Mode
0	Cycle Steal Mode
1	Burst Mode

Table 57. Internal I/O Registers (Continued)

Register	Mnemonics	Address		Remarks
MMU Common Base Register:	CBR	3	8	
MMU Bank Base Register	BBR	3	9	
MMU Common/Bank Register	CBAR	3	A	
Operation Mode Control Register	OMCR	3	E	
I/O Control Register:	ICR	3	F	

bit	CB7	CB6	CB5	CB4	CB3	CB2	CB1	CB0
during RESET	0	0	0	0	0	0	0	0
R/W	R/W	R/W	R/W	R/W	R/W	R/W	R/W	R/W

MMU Common Base Register

bit	BB7	BB6	BB5	BB4	BB3	BB2	BB1	BB0
during RESET	0	0	0	0	0	0	0	0
R/W	R/W	R/W	R/W	R/W	R/W	R/W	R/W	R/W

MMU Bank Base Register

bit	CA3	CA2	CA1	CA0	BA3	BA2	BA1	BA0
during RESET	1	1	1	1	0	0	0	0
R/W	R/W	R/W	R/W	R/W	R/W	R/W	R/W	R/W

MMU Common Area Register

MMU Bank Area Register

bit	MIE	$\overline{\text{MITE}}$	$\overline{\text{IOC}}$	—	—	—	—	—
during RESET	1	1	1	1	1	1	1	1
R/W	R/W	W	R/W					

$\overline{\text{IOC}}$ I/O Compatibility

$\overline{\text{MITE}}$ $\overline{\text{M1}}$ Temporary Enable

MIE $\overline{\text{M1}}$ Enable

bit	IOA7	IOA6	IOSTP	—	—	—	—	—
during RESET	0	0	0	1	1	1	1	1
R/W	R/W	R/W	R/W					

IOSTP I/O Stop

IOA7, IOA6 I/O Address

Table 57. Internal I/O Registers (Continued)

Register	Mnemonics	Address	Remarks
DMA/WAIT Control Register:	DCNTL	3 2	

bit	MWI1	MWI0	IWI1	IWI0	DMS1	DMS0	DIMA1	DIMA0
during RESET	1	1	1	1	0	0	0	0
R/W	R/W	R/W	R/W	R/W	R/W	R/W	R/W	R/W

DMA Ch 1 I/O Memory Mode Select

$\overline{\text{DREQ}}$i Select, i=1,0

I/O Wait Insertion

Memory Wait Insertion

MWI1,0	The number of wait states
0 0	0
0 1	1
1 0	2
1 1	3

IWI1,0	The number of wait states
0 0	0
0 1	2
1 0	3
1 1	4

DMSi	Sense
1	Edge sense
0	Level sense

DIM1,0	Transfer Mode	Address Increment/Decrement	
0 0	M→I/O	MAR1+1	IAR1 fixed
0 1	M→I/O	MAR1-1	IAR1 fixed
1 0	I/O→M	IAR1 fixed	MAR1+1
1 1	I/O→M	IAR1 fixed	MAR1-1

Table 57. Internal I/O Registers (Continued)

Register	Mnemonics	Address		Remarks
Interrupt Vector Low Register	IL	3	3	

bit	IL7	IL6	IL5	—	—	—	—	—
during RESET	0	0	0	0	0	0	0	0
R/W	R/W	R/W	R/W					

Interrupt Vector Low

INT/TRAP Control Register — ITC — 3 — 4

bit	TRAP	UF0	—	—	—	ITE2	ITE1	ITE0
during RESET	0	0	1	1	1	0	0	0
R/W	R/W	R				R/W	R/W	R/W

TRAP

Unidentified Fetch Object

$\overline{\text{INT}}$ Enable 2,1,0

Refresh Control Register: — RCR — 3 — 6

bit	REFE	REFW	—	—	—	—	CYC1	CYC0
during RESET	1	1	1	1	1	1	0	0
R/W	R/W	R/W					R/W	R/W

Refresh Enable

Refresh Wait State

Cycle select

	Interval of Refresh Cycle
0 0	10 states
0 1	20
1 0	40
1 1	80

ORDERING INFORMATION

Codes

- Package
  P = Plastic Dip
  V = Plastic Chip Carrier
  F = Quad Flat Pack
- Temperature
  S = 0°C to +70°C
  E = -40°C to 100°C
- Speed
  06 = 6 MHz
  08 = 8 MHz
  10 = 10 MHz
- Environmental
  C = Plastic Standard
- Example
  Z8018008PSC is an 80180 8 MHz, Plastic DIP, 0°C to 70°C, Plastic Standard Flow.

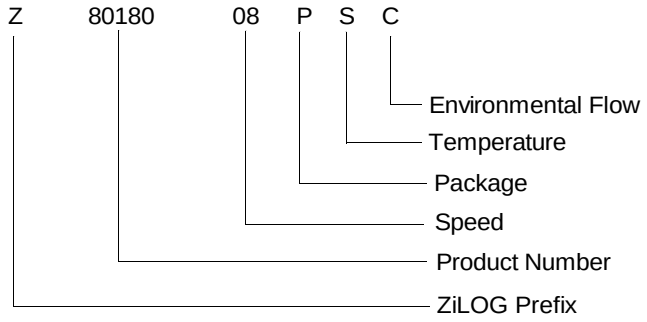

A

AC characteristics 197

Address generation, physical 64

Address map
- I/O 44
- I/O address translation 57
- Logical examples 55
- Logical memory organization 58
- Logical space configuration 59
- Physical address transition 56

Addressing
- Extended 182
- I/O 184
- Indexed 182
- Indirect 181

Architecture 12

ASCI
- Baud rate selection 142
- Block diagram 117
- Clock diagram 141
- Control register A0 125
- Control register A1 128
- Control register B 131
- Functions 116
- Interrupt request circuit diagram 140
- Register descriptions 117
- Status register 0 120
- Status register 1 123

Asynchronous serial communications interface (ASCI) 14

B

Baud rate selection
- ASCI 142
- CSI/O 150

Block diagram 6
- ASCI 117
- CSI/O 146
- DMAC 92
- MMU 56
- PRT 157

Bus state controller 13

C

Central processing unit (CPU) 14

Circuit diagram, ASCI interrupt request 140

Clock generator 13

Clocked serial I/O (CSI/O) 14

CPU register configurations 176

CPU timing
- Basic instruction 23
- BUSREQ/BUSACK Bus Exchange 25
- HALT and Low Power modes 31
- I/O data read/write 22
- Internal I/O registers 41
- MMU register description 60
- Op Code fetch timing 18
- Operand and data read/write 20
- RESET 25
- Wait state generator 27

CSI/O
- Baud rate selection 150
- Block diagram 146
- Control/Status register 147, 150, 159, 160, 161, 172
- External clock receivetiming diagram 156
- External clock transmit timing diagram 154
- Internal clock receivetiming diagram 155
- Internal clock transmit timing diagram 153
- interrupt request generation 151
- Operation 151
- Receive/Transmit timing diagram 204
- Timer initialization, count down and reload timing diagram 163
- Timer output control 163
- Timer output timing diagram 164

Cycle timing 87

D

Data formats 131

DC characteristics
- Absolute maximum ratings 185
- Z80180 186
- Z8L180 189
- Z8S180 187

DCD0 timing diagram 139

Description, general 1

Design rules, circuit board 170

Direct register bit field definitions 181

Divide ratio 134

DMA
- Controller (DMAC) 90
- CYCLE STEAL mode timing diagram 106
- Edge-sense timing diagram 108
- Interrupt request generation 114
- Level-sense timing diagram 107
- Mode register (DMODE) 97
- Operation 104
- Status register (DSTAT) 95
- TEND0 output timing diagram 108
- Transfer request 110
- WAIT control register 100

DMAC
- Block diagram 92
- Register 93

DRAM refresh intervals 89

Dynamic RAM refresh control 86

E

E clock
- BUS RELEASE, SLEEP and SYSTEM STOP modes timing diagram 201
- Memory and I/O R/W cycles timing diagram 201
- Minimum timing example of PWEL and PWEH timing diagram 202
- Timing conditions 166
- Timing diagram (R/W and INTACK cy-

cles) 167
Timing diagram (SLEEP and SYSTEM STOP modes) 168

Extended addressing 182

External clock rise and fall time 204

F

Features 1

H

HALT mode 31

I

I/O
Addressing 184
Control register (ICR) 42

I/O control register 42

Immediate addressing
Addressing
Immediate 183

Indexed addressing 182

Indirect addressing 181

Input ris and fall time (except EXTAL and RESET) timing diagram 204

Instruction set
CPU registers 175
Flag register 178
Summary 173

INT0
Interrupt mode 2 timing 80
Mode 1 interrupt sequence 77
Mode 1 timing 78

INT0 mode 0 timing 76

Interrupt
Acknowledge cycle timings 82
Control registers and flags 65
Controller 13
CSI/O request generation 151
DMA request generation 114
Enable (ITE) 68
INT/TRAP control register (ITC) 67
Maskable interrupt 0 (INT0) 75
Non-maskable 72
PRT request generation 164
Sources 65
Sources during reset 83
TRAP 70
Vector register (I) 66

IOSTOP mode 35

L

Level-sense programming 109

Logical memory organization 58

M

M1 temporary enable timing 16

Maskable interrupt level 0 75

Memory and I/O Wait state insertion 29
Memory management unit (MMU) 13
Memory to ASCI 109
Memory to memory 105
MMU Register description 60
Mode
    HALT 31
    IOSTOP 35
    SLEEP 33
    SYSTEM STOP 35
Modem control signals 138

N

NMI
    and DMA operation timing diagram 115
    Use 74
Non-maskable interrupt 72

O

On-chip clock generator
    Circuit board design rules 170
    External clock interface 169
    Operating frequencies 168
Operation modes
    Control register 84
    CPU timing 18
    IOC 16
    M1 Enable 15
    M1 temporary enable 16

P

Pin description
    A0 through CTS1 7
    BUSREQ through RFSH 9
    D0 through INT2 8
    RTS0 through TEND1 10
    TEST through XTAL 10
Pin package
    64-pin DIP 3
    68-pin PLCC 4
    80-pin QFP 5
Programmable reload timer (PRT) 14
Programming
    Level-sense 109
PRT
    Block diagram 157
    Bus release mode timing diagram 167
    Interrupt request generation 164
    Timer control register 161

R

Refresh 87
    Control register 88
Register
    ASCI Control A0 125
    ASCI Control A1 128
    ASCI Control B 131
    ASCI Status 0 120
    ASCI Status 1 123

CSI/O control/status 147, 150, 159, 160, 161, 172
Direct bit field definitions 181
DMA mode (DMODE) 97
DMA status 95
DMA/WAIT control 100
Flag 178
I/O Control 42
I/O control (ICR) 42
Indirect addressing 181
INT/TRAP control (ITC) 67
Interrupt Vector (I) 66
MMU bank base (BBR) 62
MMU common bank area (CBAR) 60
MMU common base (CBR) 61
Operation mode control 15, 84
PRT timer control register 161
Refresh control 88

Relative addressing
Addressing
Relative 183

RETI
control signal states 85
Instruction sequence 84

RTS0 timing diagram 140

S

Secondary bus interface 165

SLEEP mode 33

SLP execution cycle timing diagram
Timing diagram
SLP execution cycle 203

Status summary table 10

SYSTEM STOP mode 35

T

Test conditions, standard 205

Timer initialization, count down and reload 163

Timer output timing diagram
Timing diagram
Timer output 202

Timing diagram 163
AC 197
Bus Exchange Timing During CPU Internal Operation 27
Bus Exchange Timing During Memory Read 26
CPU (I/O Read/Write cycles) 199
CSI/O external clock receive 156
CSI/O external clock transmit 154
CSI/O internal clock receive 155
CSI/O internal clock transmit 153
CSI/O receive/transmit 204
CSI/O timer output 164
DCD0 139
DMA control signals 200
DMA CYCLE STEAL mode 106
DMA edge-sense 108
DMA level-sense 107

DMA TEND0 output 108
E clock (memory and I/O R/W cycles) 201
E clock (R/W and INTACK cycles) 167
E clock (SLEEP and SYSTEM STOP modes) 168
E clock BUS RELEASE, SLEEP and SYSTEM STOP modes) 201
E clock minimum timing example of PWEL and PWEH) 202
External clock rise and fall 204
HALT 33
I/O Read and Write cycles with IOC = 0 17
I/O read and write cycles with IOC=1 17
I/O read/write timing 23
Input rise and fall time 204
Instruction 24
INT0 interrupt mode 2 80
INT0 mode 0 76
INT0 mode 1 78
INT1, INT2 and Internal interrupts 86
M1 temporary enable 16
Memory read/write timing (with Wait state) 22
Memory read/write timing (without Wait state) 21
NMI and DMA operation 115
Op Code Fetch timing (with Wait state) 20
Op Code Fetch timing (without Wait state) 19
PRT bus release mode 167
Refresh cycle 87
RESET 25
RTS0 140
SLEEP 35
TRAP timing - 2nd Op Code Undefined 71
TRAP timing - 3rd Op Code Undefined 72
WAIT 28
TRAP 68
Interrupt 70
Timing 71

U

Undefined Fetch Object (UFO) 68

V

Vector acquisition
INT0 mode 2 79
INT1, INT2 81
Vector table 82

W

Wait state generation
I/O Wait insertion 29
Memory and 29
Programmable Wait state insertion 28
Wait input and reset 30
Wait state insertion 30