Part Number: 0690200770
Status: Active
Description: Arbor Press Fixture

Documents:
Drawing (PDF)
RoHS Certificate of Compliance (PDF)

General

Product Family	Application Tooling
Series	T9999
Function	Insulation Displacement (IDT)
Geographic Area	Global
Level of Automation	Manual
More Detailed Tech Information	applicationtooling@molex.com
Product Name	N/A
Survey	www.molex.com//review/apptool_survey.html
Tool Type	Fixture
UPC	800754356640

Material Info

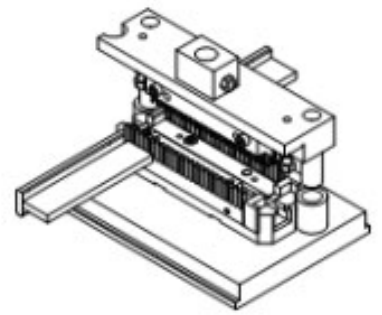

Series image - Reference only

EU ELV
Not Reviewed

EU RoHS
Not Reviewed

China RoHS

REACH SVHC
Not Reviewed

Halogen-Free Status
Not Reviewed

Need more information on product environmental compliance?

Email productcompliance@molex.com
Please visit the Contact Us section for any non-product compliance questions.

China ROHS	Not Reviewed
ELV	Not Reviewed

Search Parts in this Series
T9999 Series