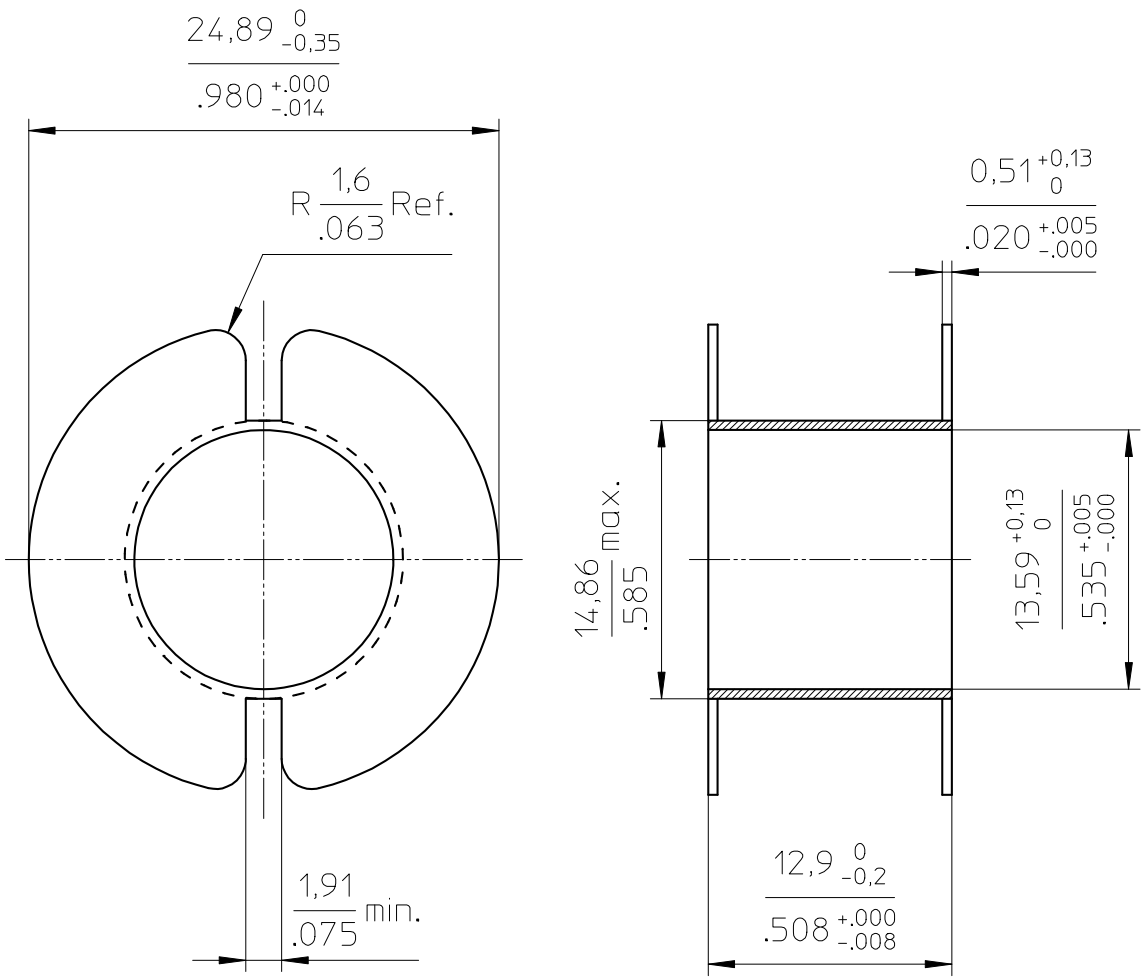

Coil former material:	Delrin 900 (POM).
	UL file number: E66288 - UL94HB.
max. operating temp:	130°
winding area:	0.091 sq inch

CLASS.NO.	CP-P30/19-1S-A	4335 000 26231	~~01-06-01~~ ~~02-11-04~~ 08-29-08
NAME NAAM: M. Tryngiel	SUPERS. VERV.	1 SH BL. / SH BL. 112 – 001	A4
MPA	CHECK CONTR. / DAT.	Property of Eigendom van	© FERROXCUBE 2000