ATTiny23U / ATTiny43U Routing&Socket card

See layout guidelines for floorplan
Keep capacitors close to IC pins

J1 and J2 goes down to the mother board.

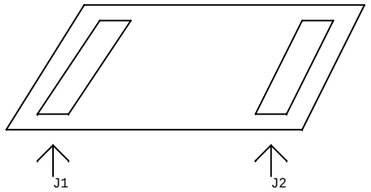

SILK: USAGE:
BOOST regulator:
open Vtarget jumper on mainboard
short J8
strap wire from mainboard Vtarget pin1 to J3 (Vbat) pin 1
w/o BOOST regulator
short J3 (Vbat)
open J8
short Vtarget jumper on mainboard

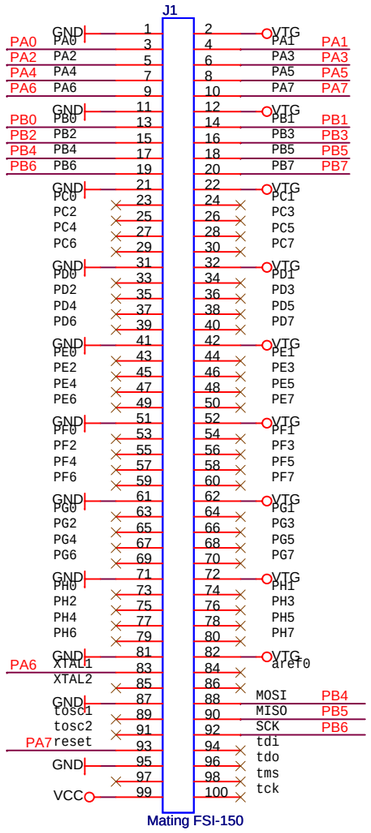

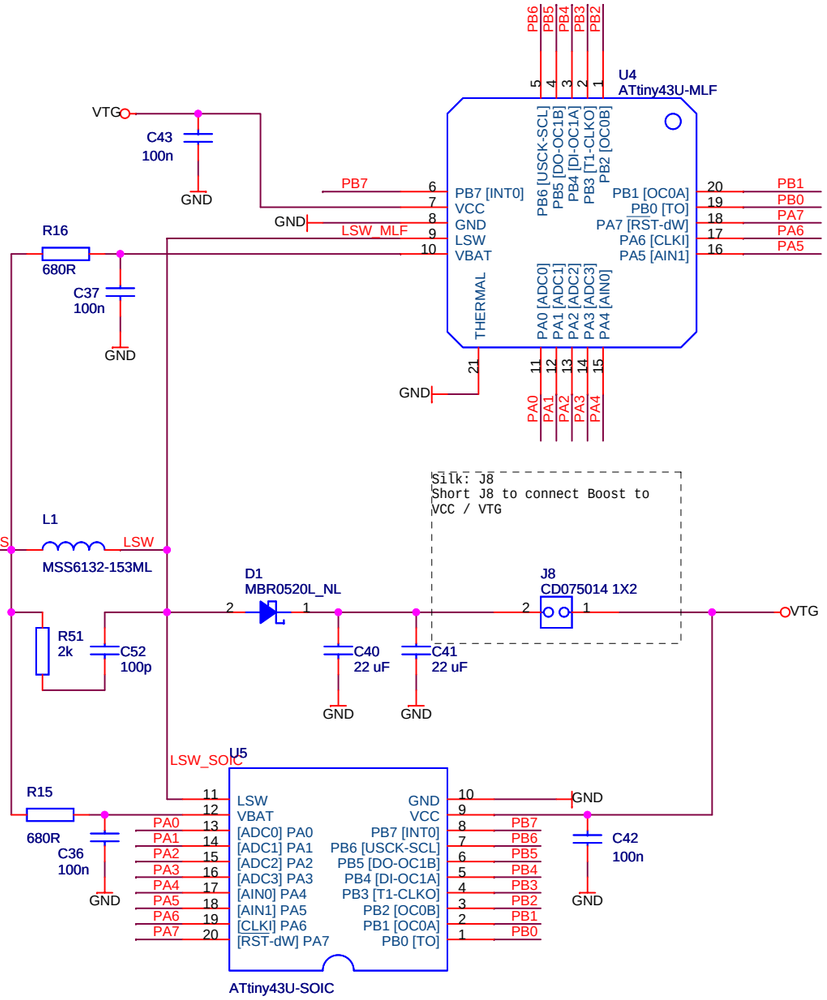

Silk: J3 (Vbat)
"pin1 +" and "pin2 -"
NOTE: When connecting external power to J3
- open Vtarget on mainboard
- short J8

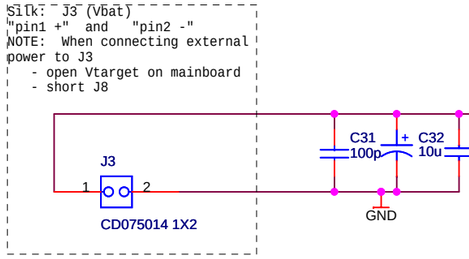

Silk: J8
Short J8 to connect Boost to VCC / VTG

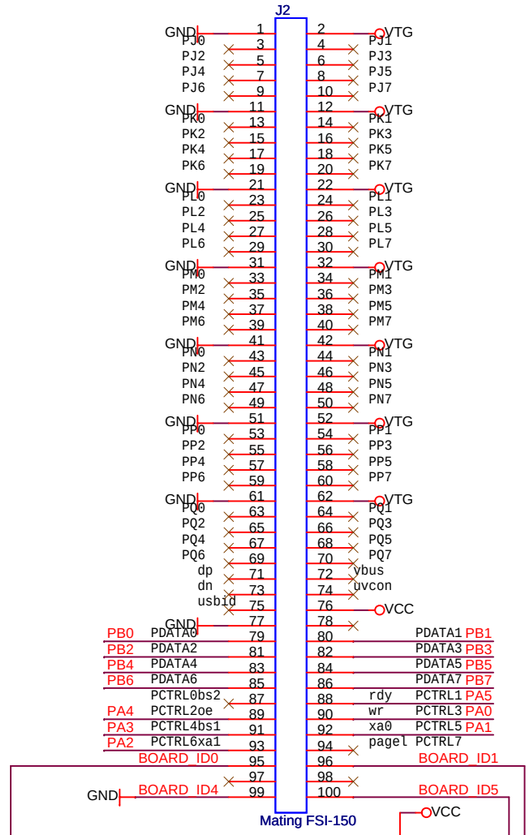

ID: 0x09

a: 0
b: /(A XOR B) ev A XNOR B

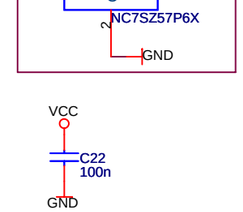

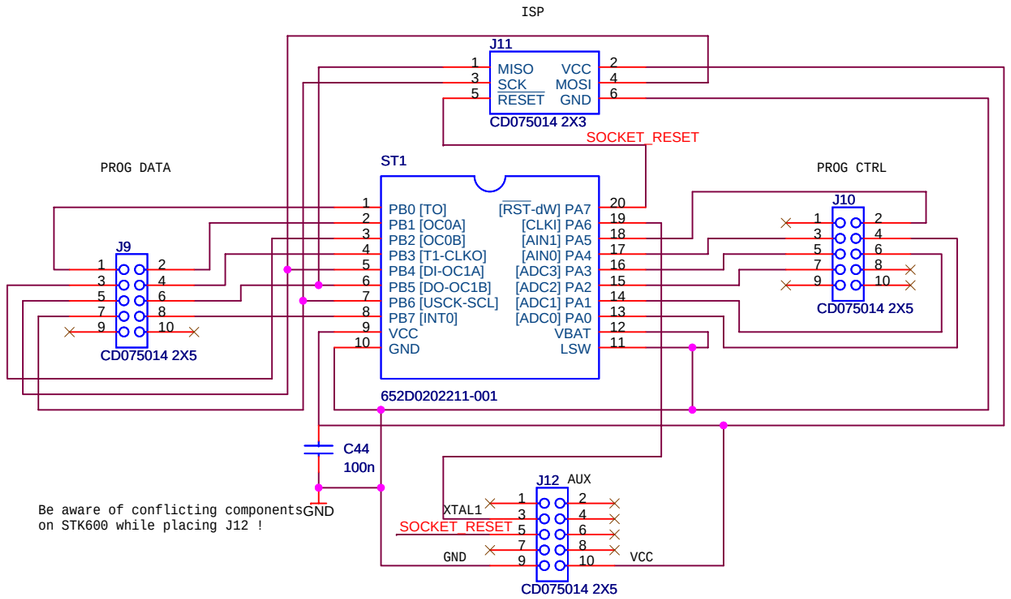

Be aware of conflicting components on STK600 while placing J12 !

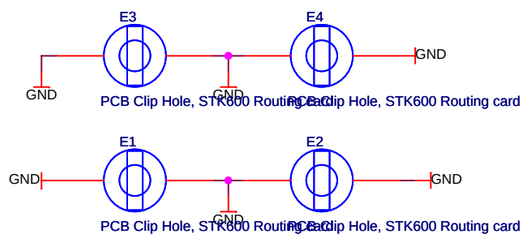

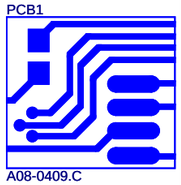

ATMEL Norway AS
Vestre Rosten 79
N-7075 TILLER
Norway

Title	STK600 socket card ATTiny23V / ATTiny43V	
Size A3	Document Number <Doc>	Rev PC2
Date: Wednesday, March 05, 2008	Sheet 1 of 1	