SN74LVC1G97 Configurable Multiple-Function Gate

1 Features

- ESD Protection Exceeds JESD 22
  - 2000-V Human Body Model (A114-A)
  - 200-V Machine Model (A115-A)
  - 1000-V Charged-Device Model (C101)
- Available in the Texas Instruments NanoFree™ Package
- Supports 5-V V_{CC} Operation
- Inputs Accept Voltages to 5.5 V
- Supports Down Translation to V_{CC}
- Max t_{pd} of 6.3 ns at 3.3 V
- Low Power Consumption, 10-µA Max I_{CC}
- ±24-mA Output Drive at 3.3 V
- I_{off} Supports Live Insertion, Partial-Power-Down Mode, and Back-Drive Protection
- Latch-Up Performance Exceeds 100 mA Per JESD 78, Class II
- Choose From Nine Specific Logic Functions

2 Applications

- Barcode Scanners
- Cable Solutions
- E-Books
- Embedded PCs
- Field Transmitter: Temperature or Pressure Sensors
- Fingerprint Biometrics
- HVAC: Heating, Ventilating, and Air Conditioning
- Network-Attached Storage (NAS)
- Server Motherboards and PSUs
- Software Defined Radios (SDR)
- TVs: High Definition (HDTV), LCD, and Digital
- Video Communications Systems
- Wireless Data Access Cards, Headsets, Keyboard, Mouse, and LAN Cards

3 Description

The SN74LVC1G97 device features configurable multiple functions. The output state is determined by eight patterns of 3-bit input. The user can choose the logic functions MUX, AND, OR, NAND, NOR, inverter, and noninverter. All inputs can be connected to V_{CC} or GND.

This configurable multiple-function gate is designed for 1.65-V to 5.5-V V_{CC} operation.

This device functions as an independent gate, but because of Schmitt action, it may have different input threshold levels for positive-going (V_T+) and negative-going (V_T–) signals.

NanoFree package technology is a major break-through in IC packaging concepts, using the die as the package.

This device is fully specified for partial-power-down applications using I_{off}. The I_{off} circuitry disables the outputs, preventing damaging current backflow through the device when it is powered down.

Device Information(1)

PART NUMBER	PACKAGE	BODY SIZE (NOM)
SN74LVC1G97DBV	SOT-23 (6)	2.90 mm × 1.60 mm
SN74LVC1G97DCK	SC70 (6)	2.00 mm × 1.25 mm
SN74LVC1G97DRL	SOT (6)	1.60 mm × 1.20 mm
SN74LVC1G97DRY		1.45 mm × 1.00 mm
SN74LVC1G97DSF		1.00 mm × 1.00 mm
SN74LVC1G97YZP	DSBGA (6)	1.41 mm × 0.91 mm

(1) For all available packages, see the orderable addendum at the end of the data sheet.

Logic Diagram (Positive Logic)

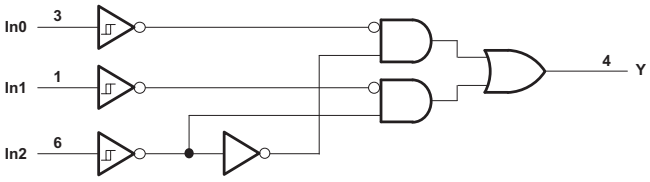

An IMPORTANT NOTICE at the end of this data sheet addresses availability, warranty, changes, use in safety-critical applications, intellectual property matters and other important disclaimers. PRODUCTION DATA.

Table of Contents

1 Features ... 1
2 Applications ... 1
3 Description ... 1
4 Revision History ... 2
5 Pin Configuration and Functions ... 3
6 Specifications ... 4
6.1 Absolute Maximum Ratings ... 4
6.2 ESD Ratings ... 4
6.3 Recommended Operating Conditions ... 4
6.4 Thermal Information ... 5
6.5 Electrical Characteristics ... 5
6.6 Switching Characteristics ... 6
6.7 Switching Characteristics ... 6
6.8 Operating Characteristics ... 6
6.9 Typical Characteristics ... 6
7 Parameter Measurement Information ... 7
8 Detailed Description ... 8
8.1 Overview ... 8
8.2 Functional Block Diagram ... 8
8.3 Feature Description ... 8
8.4 Device Functional Modes ... 8
9 Application and Implementation ... 11
9.1 Application Information ... 11
9.2 Typical Application ... 11
10 Power Supply Recommendations ... 12
11 Layout ... 13
11.1 Layout Guidelines ... 13
11.2 Layout Example ... 13
12 Device and Documentation Support ... 14
12.1 Documentation Support ... 14
12.2 Receiving Notification of Documentation Updates 14
12.3 Community Resources ... 14
12.4 Trademarks ... 14
12.5 Electrostatic Discharge Caution ... 14
13 Mechanical, Packaging, and Orderable Information ... 14

4 Revision History

NOTE: Page numbers for previous revisions may differ from page numbers in the current version.

Changes from Revision M (June 2015) to Revision N	Page
• Changed body size for SN74LVC1G97DRY to 1.45 mm × 1.00 mm	1
• Changed body size for SN74LVC1G97DSF to 1.00 mm × 1.00 mm	1
• Added Junction temperature, T_J in *Absolute Maximum Ratings*	4
• Added Operating free-air temperature, T_A for BGA package in *Recommended Operating Conditions*	4
• Added *Receiving Notification of Documentation Updates* section	14

Changes from Revision L (December 2013) to Revision M	Page
• Added *Applications*, *Device Information* table, *Pin Configuration and Functions* section, *ESD Ratings* table, *Feature Description* section, *Device Functional Modes*, *Application and Implementation* section, *Power Supply Recommendations* section, *Layout* section, *Device and Documentation Support* section, and *Mechanical, Packaging, and Orderable Information* section	1

Changes from Revision K (October 2011) to Revision L	Page
• Updated document to new TI data sheet format.	1
• Removed *Ordering Information* table.	1
• Updated I_{off} in *Features*	1
• Updated operating temperature range.	4

Copyright © 2002–2017, Texas Instruments Incorporated

5 Pin Configuration and Functions

DBV Package
6-Pin SOT-23
(Top View)

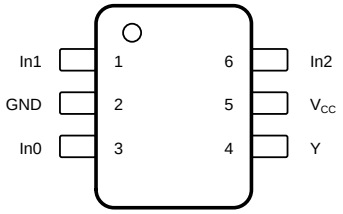

Not to scale

DCK Package
6-Pin SC70
(Top View)

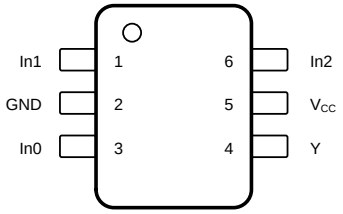

Not to scale

DRL Package
6-Pin SOT
(Top View)

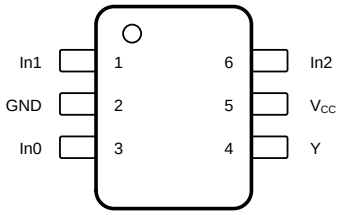

Not to scale

YZP Package
6-Pin DSBGA
(Bottom View)

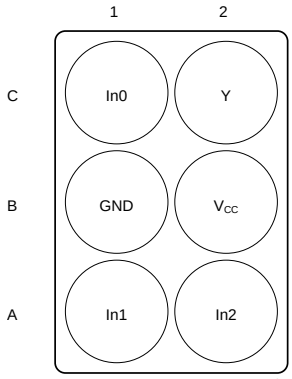

Not to scale

DRY Package
6-Pin SON
(Top View)

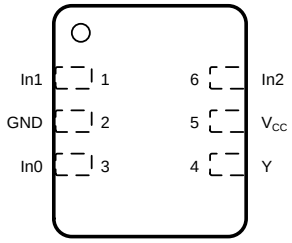

Not to scale

DSF Package
6-Pin SON
(Top View)

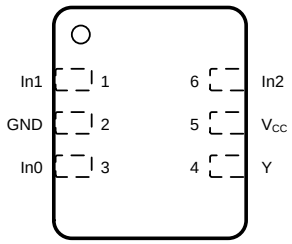

Not to scale

Pin Functions

PIN			I/O	DESCRIPTION
NAME	DCT, DCU, DRY	YZP		
In0	3	C1	I	Input 0
In1	1	A1	I	Input 1
In2	6	A2	I	Input 2
GND	2	B1	—	Ground
V_{CC}	5	B2	—	Power
Y	4	C2	O	Output

Copyright © 2002–2017, Texas Instruments Incorporated

6 Specifications

6.1 Absolute Maximum Ratings

over operating free-air temperature range (unless otherwise noted)[1]

			MIN	MAX	UNIT
V_{CC}	Supply voltage		–0.5	6.5	V
V_I	Input voltage[2]		–0.5	6.5	V
V_O	Voltage applied to any output in the high-impedance or power-off state[2]		–0.5	6.5	V
V_O	Voltage applied to any output in the high or low state[2][3]		–0.5	V_{CC} + 0.5	V
I_{IK}	Input clamp current	V_I < 0 V		–50	mA
I_{OK}	Output clamp current	V_O < 0 V		–50	mA
I_O	Continuous output current			±50	mA
	Continuous current through V_{CC} or GND			±100	mA
T_J	Junction temperature			150	°C
T_{stg}	Storage temperature		–65	150	°C

(1) Stresses beyond those listed under *Absolute Maximum Ratings* may cause permanent damage to the device. These are stress ratings only, and functional operation of the device at these or any other conditions beyond those indicated under *Recommended Operating Conditions* is not implied. Exposure to absolute-maximum-rated conditions for extended periods may affect device reliability.
(2) The input and output negative-voltage ratings may be exceeded if the input and output current ratings are observed.
(3) The value of V_{CC} is provided in the *Recommended Operating Conditions* table.

6.2 ESD Ratings

			VALUE	UNIT
$V_{(ESD)}$	Electrostatic discharge	Human body model (HBM), per ANSI/ESDA/JEDEC JS-001[1]	±2000	V
		Charged device model (CDM), per JEDEC specification JESD22-C101\[2]	±1000	

(1) JEDEC document JEP155 states that 500-V HBM allows safe manufacturing with a standard ESD control process.
(2) JEDEC document JEP157 states that 250-V CDM allows safe manufacturing with a standard ESD control process.

6.3 Recommended Operating Conditions

See [1]

			MIN	MAX	UNIT
V_{CC}	Supply voltage	Operating	1.65	5.5	V
		Data retention only	1.5		
V_I	Input voltage		0	5.5	V
V_O	Output voltage		0	V_{CC}	V
I_{OH}	High-level output current	V_{CC} = 1.65 V		–4	mA
		V_{CC} = 2.3 V		–8	
		V_{CC} = 3 V		–16	
				–24	
		V_{CC} = 4.5 V		–32	
I_{OL}	Low-level output current	V_{CC} = 1.65 V		4	mA
		V_{CC} = 2.3 V		8	
		V_{CC} = 3 V		16	
				24	
		V_{CC} = 4.5 V		32	
T_A	Operating free-air temperature	BGA package	–40	85	°C
		All other packages	–40	125	

(1) All unused inputs of the device must be held at V_{CC} or GND to ensure proper device operation. See *Implications of Slow or Floating CMOS Inputs*, SCBA004.

Copyright © 2002–2017, Texas Instruments Incorporated

6.4 Thermal Information

THERMAL METRIC[1]		SN74LVC1G97				UNIT
		DBV (SOT-23)	DCK (SC70)	DRL (SOT)	YZP (DSBGA)	
		6 PINS	6 PINS	6 PINS	6 PINS	
$R_{\theta JA}$	Junction-to-ambient thermal resistance	165	259	142	123	°C/W

(1) For more information about traditional and new thermal metrics, see the *Semiconductor and IC Package Thermal Metrics* application report.

6.5 Electrical Characteristics

over recommended operating free-air temperature range (unless otherwise noted)

PARAMETER	TEST CONDITIONS	V_{CC}	–40°C TO +85°C			–40°C TO +125°C			UNIT
			MIN	TYP[1]	MAX	MIN	TYP[1]	MAX	
V_{T+} Positive-going input threshold voltage		1.65 V	0.79		1.16	0.79		1.16	V
		2.3 V	1.11		1.56	1.11		1.56	
		3 V	1.5		1.87	1.5		1.87	
		4.5 V	2.16		2.74	2.16		2.74	
		5.5 V	2.61		3.33	2.61		3.33	
V_{T-} Negative-going input threshold voltage		1.65 V	0.35		0.62	0.35		0.62	V
		2.3 V	0.58		0.87	0.58		0.87	
		3 V	0.84		1.19	0.84		1.19	
		4.5 V	1.41		1.9	1.41		1.9	
		5.5 V	1.87		2.29	1.87		2.29	
ΔV_T Hysteresis ($V_{T+} – V_{T-}$)		1.65 V	0.3		0.62	0.3		0.62	V
		2.3 V	0.4		0.8	0.4		0.8	
		3 V	0.53		0.87	0.53		0.87	
		4.5 V	0.71		1.04	0.71		1.04	
		5.5 V	0.71		1.11	0.71		1.11	
V_{OH}	I_{OH} = –100 µA	1.65 V to 5.5 V	V_{CC} – 0.1			V_{CC} – 0.1			V
	I_{OH} = –4 mA	1.65 V	1.2			1.2			
	I_{OH} = –8 mA	2.3 V	1.9			1.9			
	I_{OH} = –16 mA	3 V	2.4			2.4			
	I_{OH} = –24 mA		2.3			2.3			
	I_{OH} = –32 mA	4.5 V	3.8			3.8			
V_{OL}	I_{OL} = 100 µA	1.65 V to 5.5 V			0.1			0.1	V
	I_{OL} = 4 mA	1.65 V			0.45			0.45	
	I_{OL} = 8 mA	2.3 V			0.3			0.3	
	I_{OL} = 16 mA	3 V			0.4			0.45	
	I_{OL} = 24 mA				0.55			0.55	
	I_{OL} = 32 mA	4.5 V			0.55			0.58	
I_I	V_I = 5.5 V or GND	0 to 5.5 V			±5			±5	µA
I_{off}	V_I or V_O = 5.5 V	0			±10			±10	µA
I_{CC}	V_I = 5.5 V or GND, I_O = 0	1.65 V to 5.5 V			10			10	µA
ΔI_{CC}	One input at V_{CC} – 0.6 V, Other inputs at V_{CC} or GND	3 V to 5.5 V			500			500	µA
C_I	V_I = V_{CC} or GND	3.3 V		3.5			3.5		pF

(1) All typical values are at V_{CC} = 3.3 V, T_A = 25°C.

6.6 Switching Characteristics

over recommended operating free-air temperature range (unless otherwise noted) (see Figure 2)

PARAMETER	FROM (INPUT)	TO (OUTPUT)	–40°C TO 85°C								UNIT
			V_{CC} = 1.8 V ± 0.15 V		V_{CC} = 2.5 V ± 0.2 V		V_{CC} = 3.3 V ± 0.3 V		V_{CC} = 5 V ± 0.5 V		
			MIN	MAX	MIN	MAX	MIN	MAX	MIN	MAX	
t_{pd}	Any In	Y	3.2	14.4	2	8.3	1.5	6.3	1.1	5.1	ns

6.7 Switching Characteristics

over recommended operating free-air temperature range (unless otherwise noted) (see Figure 2)

PARAMETER	FROM (INPUT)	TO (OUTPUT)	–40°C TO 125°C								UNIT
			V_{CC} = 1.8 V ± 0.15 V		V_{CC} = 2.5 V ± 0.2 V		V_{CC} = 3.3 V ± 0.3 V		V_{CC} = 5 V ± 0.5 V		
			MIN	MAX	MIN	MAX	MIN	MAX	MIN	MAX	
t_{pd}	Any In	Y	3.2	16.4	2	9.3	1.5	7.3	1.1	6.1	ns

6.8 Operating Characteristics

T_A = 25°C

PARAMETER		TEST CONDITIONS	V_{CC} = 1.8 V	V_{CC} = 2.5 V	V_{CC} = 3.3 V	V_{CC} = 5 V	UNIT
			TYP	TYP	TYP	TYP	
C_{pd}	Power dissipation capacitance	f = 10 MHz	22	23	23	26	pF

6.9 Typical Characteristics

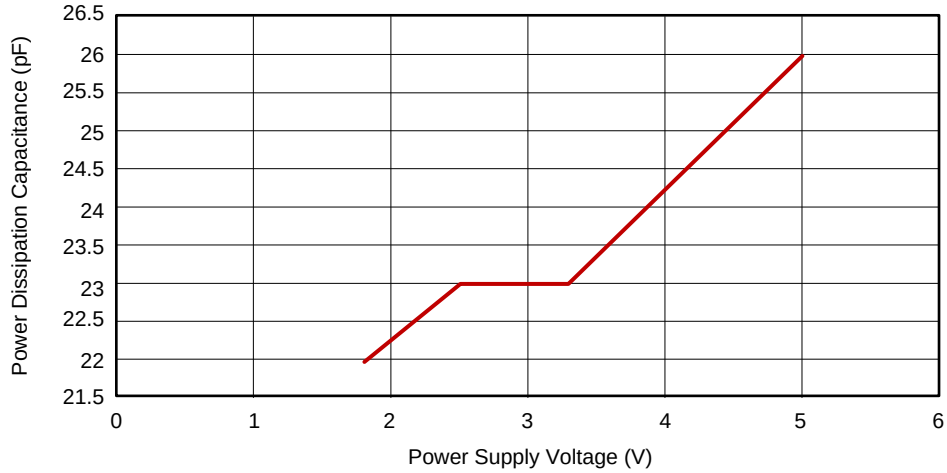

Figure 1. Power Dissipation Capacitance vs Power Supply Voltage

Copyright © 2002–2017, Texas Instruments Incorporated

7 Parameter Measurement Information

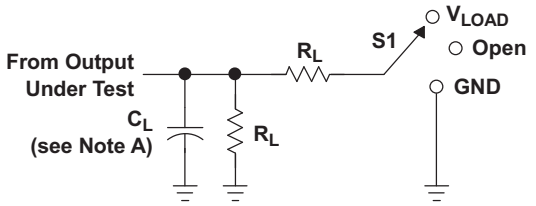

LOAD CIRCUIT

TEST	S1
t_{PLH}/t_{PHL}	Open
t_{PLZ}/t_{PZL}	V_{LOAD}
t_{PHZ}/t_{PZH}	GND

V_{CC}	INPUTS		V_M	V_{LOAD}	C_L	R_L	V_Δ
	V_I	t_r/t_f					
1.8 V ± 0.15 V	V_{CC}	≤2 ns	$V_{CC}/2$	2 × V_{CC}	30 pF	1 kΩ	0.15 V
2.5 V ± 0.2 V	V_{CC}	≤2 ns	$V_{CC}/2$	2 × V_{CC}	30 pF	500 Ω	0.15 V
3.3 V ± 0.3 V	3 V	≤2.5 ns	1.5 V	6 V	50 pF	500 Ω	0.3 V
5 V ± 0.5 V	V_{CC}	≤2.5 ns	$V_{CC}/2$	2 × V_{CC}	50 pF	500 Ω	0.3 V

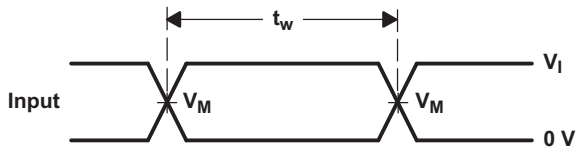

VOLTAGE WAVEFORMS
PULSE DURATION

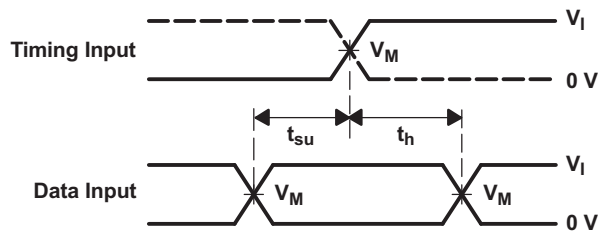

VOLTAGE WAVEFORMS
SETUP AND HOLD TIMES

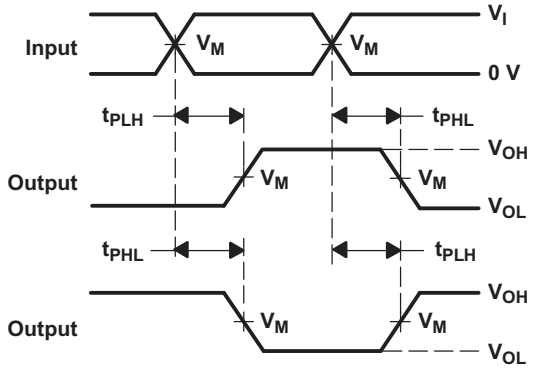

VOLTAGE WAVEFORMS
PROPAGATION DELAY TIMES
INVERTING AND NONINVERTING OUTPUTS

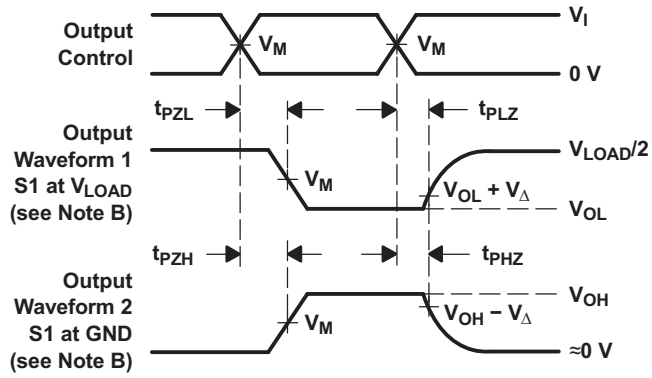

VOLTAGE WAVEFORMS
ENABLE AND DISABLE TIMES
LOW- AND HIGH-LEVEL ENABLING

NOTES:
A. C_L includes probe and jig capacitance.
B. Waveform 1 is for an output with internal conditions such that the output is low, except when disabled by the output control. Waveform 2 is for an output with internal conditions such that the output is high, except when disabled by the output control.
C. All input pulses are supplied by generators having the following characteristics: PRR≤ 10 MHz, Z_O = 50 W.
D. The outputs are measured one at a time, with one transition per measurement.
E. t_{PLZ} and t_{PHZ} are the same as t_{dis}.
F. t_{PZL} and t_{PZH} are the same as t_{en}.
G. t_{PLH} and t_{PHL} are the same as t_{pd}.
H. All parameters and waveforms are not applicable to all devices.

Figure 2. Load Circuit and Voltage Waveforms

8 Detailed Description

8.1 Overview

This configurable multiple-function gate is designed for 1.65-V to 5.5-V V_{CC} operation.

The SN74LVC1G97 device features configurable multiple functions. The output state is determined by eight patterns of 3-bit input. The user can choose variations of common logic functions, like AND, OR, and NOT. All inputs can be connected to V_{CC} or GND.

This device functions as an independent gate, but because of Schmitt action, it may have different input threshold levels for positive-going (V_{T+}) and negative-going (V_{T-}) signals.

This device is fully-specified for partial-power-down applications using I_{off}. The I_{off} circuitry disables the outputs, preventing damaging current backflow through the device when it is powered down.

8.2 Functional Block Diagram

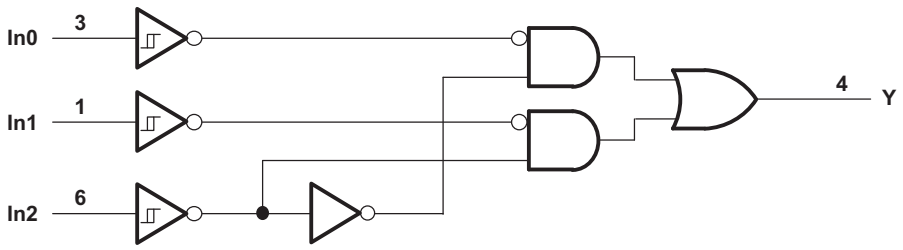

8.3 Feature Description

The SN74LVC1G97 device has a wide operating V_{CC} range of 1.65 V to 5.5 V, which allows use in a broad range of systems. The 5.5-V I/Os allow down translation and also allow voltages at the inputs when V_{CC} = 0 V.

8.4 Device Functional Modes

Table 1 shows the functional modes of SN74LVC1G97.

Table 1. Function Table

INPUTS			OUTPUT
In2	In1	In0	Y
L	L	L	L
L	L	H	L
L	H	L	H
L	H	H	H
H	L	L	L
H	L	H	H
H	H	L	L
H	H	H	H

Copyright © 2002–2017, Texas Instruments Incorporated

Table 2. Function Selection Table

LOGIC FUNCTION	FIGURE NUMBER
2-to-1 data selector	Figure 3
2-input AND gate	Figure 4
2-input OR gate with one inverted input	Figure 5
2-input NAND gate with one inverted input	Figure 5
2-input AND gate with one inverted input	Figure 6
2-input NOR gate with one inverted input	Figure 6
2-input OR gate	Figure 7
Inverter	Figure 8
Noninverted buffer	Figure 9

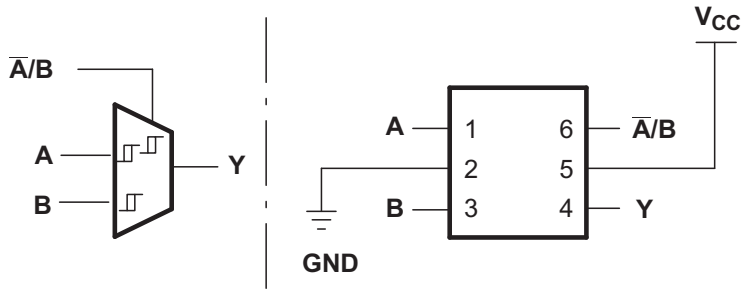

Figure 3. 2-to-1 Data Selector

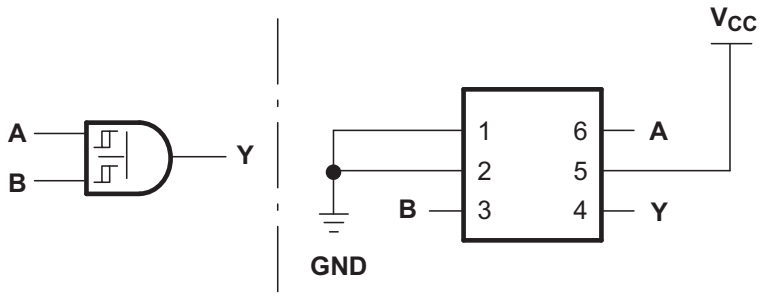

Figure 4. 2-Input AND Gate

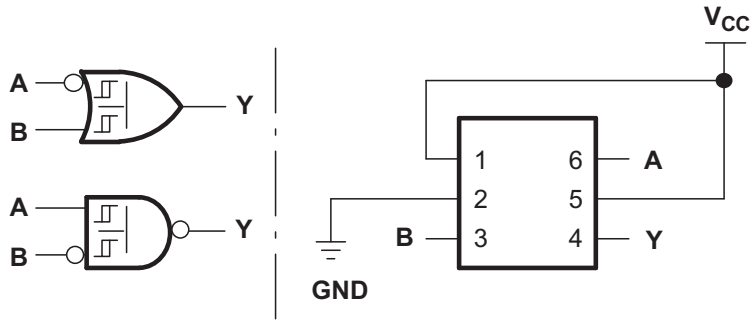

Figure 5. 2-Input OR Gate With One Inverted Input
2-Input NAND Gate With One Inverted Input

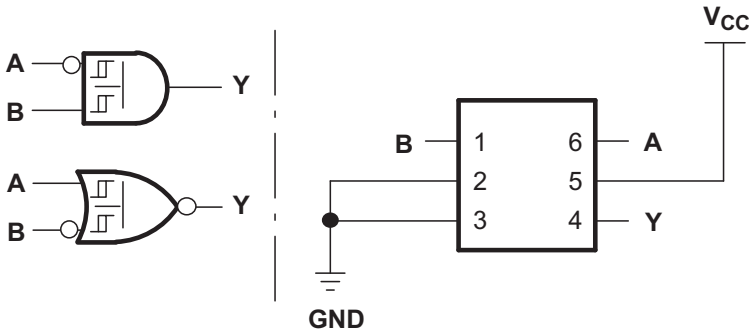

Figure 6. 2-Input AND Gate With One Inverted Input 2-Input NOR Gate With One Inverted Input

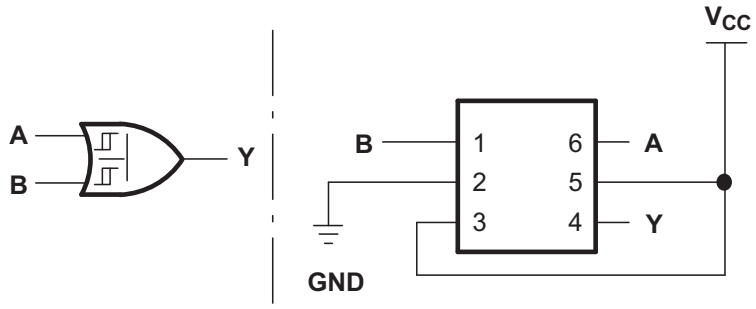

Figure 7. 2-Input OR Gate

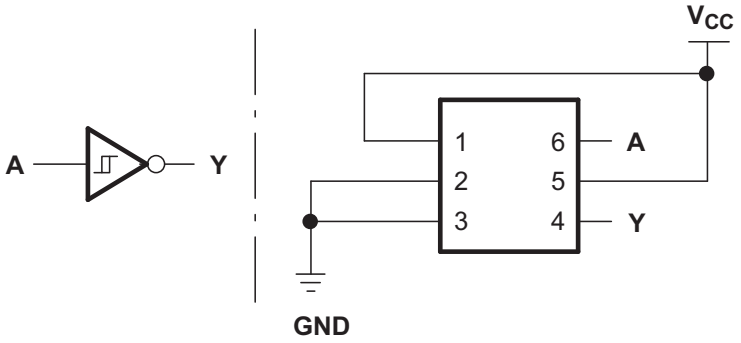

Figure 8. Inverter

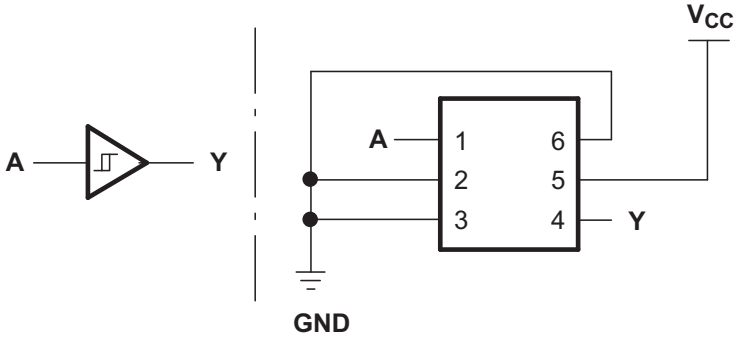

Figure 9. Noninverted Buffer

Copyright © 2002–2017, Texas Instruments Incorporated

9 Application and Implementation

NOTE

Information in the following applications sections is not part of the TI component specification, and TI does not warrant its accuracy or completeness. TI's customers are responsible for determining suitability of components for their purposes. Validate and test the design implementation to confirm system functionality.

9.1 Application Information

The SN74LVC1G97 device offers flexible configuration for many design applications. This example describes basic power sequencing using the AND gate configuration. Power sequencing is often used in applications that require a processor or other delicate device with specific voltage timing requirements in order to protect the device from malfunctioning.

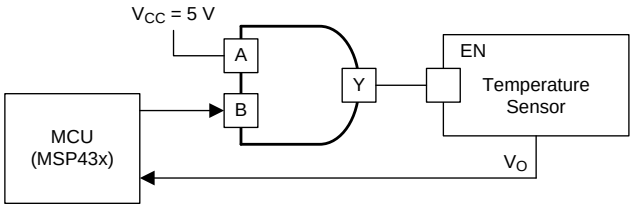

Figure 10. Simplified Application

9.2 Typical Application

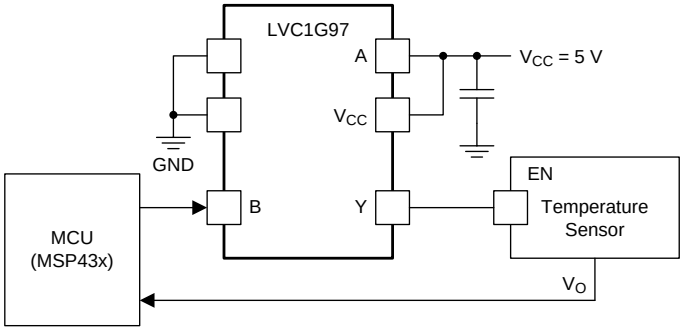

Figure 11. Typical Application

9.2.1 Design Requirements

- Recommended input conditions:
  - For rise time and fall time specifications, see $\Delta t/\Delta v$ in the *Recommended Operating Conditions* table.
  - For specified high and low levels, see V_{IH} and V_{IL} in the *Recommended Operating Conditions* table.
  - Inputs and outputs are overvoltage tolerant and can therefore go as high as 5.5 V at any valid V_{CC}.
- Recommended output conditions:
  - Load currents must not exceed ±50 mA.
- Frequency selection criterion:
  - Figure 12 illustrates the effects of frequency on output current.
  - Added trace resistance and capacitance can reduce maximum frequency capability. Follow the layout practices listed in the *Layout* section.

Typical Application (continued)

9.2.2 Detailed Design Procedure

The SN74LVC1G97 device uses CMOS technology and has balanced output drive. Avoid bus contentions that can drive currents that can exceed maximum limits.

The SN74LVC1G97 allows for performing logical Boolean functions with digital signals. Maintain input signals as close as possible to either 0 V or V_{CC} for optimal operation.

9.2.3 Application Curve

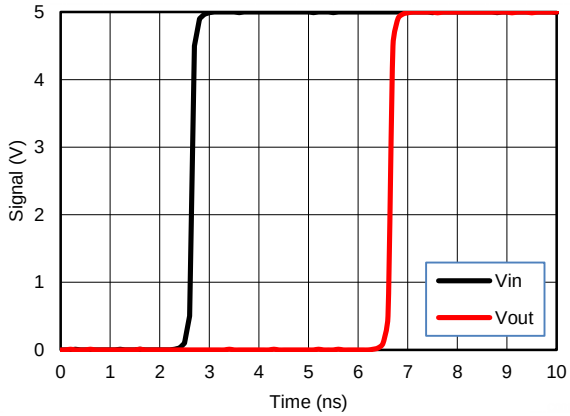

Figure 12. Simulated Input-to-Output Voltage Response Showing Propagation Delay at V_{CC} = 5 V

10 Power Supply Recommendations

The power supply can be any voltage between the minimum and maximum supply voltage rating listed in the *Recommended Operating Conditions* table.

To prevent power disturbance, ensure good bypass capacitance for each V_{CC} terminal. For devices with a single-supply, a 0.1-µF bypass capacitor is recommended. If multiple pins are labeled V_{CC}, then a 0.01-µF or 0.022-µF capacitor is recommended for each V_{CC} because the V_{CC} pins are tied together internally. For devices with dual supply pins operating at different voltages, for example V_{CC} and V_{DD}, a 0.1-µF bypass capacitor is recommended for each supply pin. To reject different frequencies of noise, use multiple bypass capacitors in parallel. Capacitors with values of 0.1 µF and 1 µF are commonly used in parallel. Place the bypass capacitor as close to the power terminal as possible for best results.

Copyright © 2002–2017, Texas Instruments Incorporated

11 Layout

11.1 Layout Guidelines

When using multiple-bit logic devices, inputs must never float.

In many cases, functions (or parts of functions) of digital logic devices are unused, for example, when only two inputs of a triple-input AND gate are used or when only 3 of the 4 buffer gates are used. Such input pins must not be left unconnected, because the undefined voltages at the outside connections result in undefined operational states. Figure 13 specifies the rules that must be observed under all circumstances. All unused inputs of digital logic devices must be connected to a high or low bias to prevent them from floating. The logic level that must be applied to any particular unused input depends on the function of the device. Generally they are tied to GND or V_{CC}, whichever makes more sense or is more convenient. It is generally acceptable to float outputs, unless the part is a transceiver. If the transceiver has an output enable pin, it disables the output section of the part when asserted, which does not disable the input section of the I/Os. Therefore, the I/Os cannot float when disabled.

11.2 Layout Example

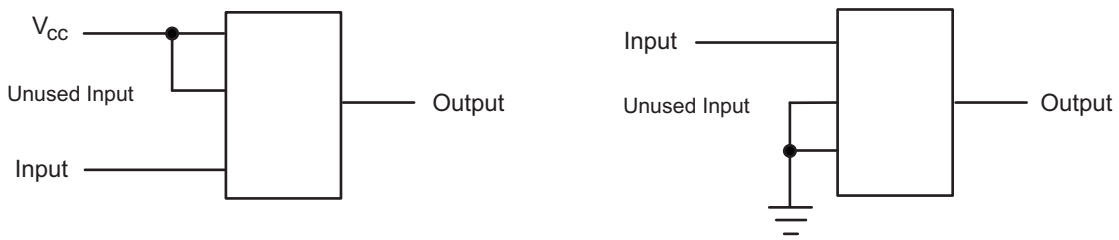

Figure 13. Layout Diagrams

12 Device and Documentation Support

12.1 Documentation Support

12.1.1 Related Documentation

For related documentation see the following:

- *Implications of Slow or Floating CMOS Inputs*, SCBA004
- *Selecting the Right Texas Instruments Signal Switch*, SZZA030

12.2 Receiving Notification of Documentation Updates

To receive notification of documentation updates, navigate to the device product folder on ti.com. In the upper right corner, click on *Alert me* to register and receive a weekly digest of any product information that has changed. For change details, review the revision history included in any revised document.

12.3 Community Resources

The following links connect to TI community resources. Linked contents are provided "AS IS" by the respective contributors. They do not constitute TI specifications and do not necessarily reflect TI's views; see TI's Terms of Use.

TI E2E™ Online Community ***TI's Engineer-to-Engineer (E2E) Community.*** Created to foster collaboration among engineers. At e2e.ti.com, you can ask questions, share knowledge, explore ideas and help solve problems with fellow engineers.

Design Support ***TI's Design Support*** Quickly find helpful E2E forums along with design support tools and contact information for technical support.

12.4 Trademarks

NanoFree, E2E are trademarks of Texas Instruments.
All other trademarks are the property of their respective owners.

12.5 Electrostatic Discharge Caution

These devices have limited built-in ESD protection. The leads should be shorted together or the device placed in conductive foam during storage or handling to prevent electrostatic damage to the MOS gates.

13 Mechanical, Packaging, and Orderable Information

The following pages include mechanical packaging and orderable information. This information is the most current data available for the designated devices. This data is subject to change without notice and revision of this document. For browser based versions of this data sheet, refer to the left hand navigation.

Copyright © 2002–2017, Texas Instruments Incorporated

PACKAGING INFORMATION

Orderable Device	Status (1)	Package Type	Package Drawing	Pins	Package Qty	Eco Plan (2)	Lead/Ball Finish (6)	MSL Peak Temp (3)	Op Temp (°C)	Device Marking (4/5)	Samples
SN74LVC1G97DBVR	ACTIVE	SOT-23	DBV	6	3000	Green (RoHS & no Sb/Br)	CU NIPDAU	Level-1-260C-UNLIM	-40 to 125	(C975, C97K, C97R)	Samples
SN74LVC1G97DBVRE4	ACTIVE	SOT-23	DBV	6	3000	Green (RoHS & no Sb/Br)	CU NIPDAU	Level-1-260C-UNLIM	-40 to 125	(C975, C97K, C97R)	Samples
SN74LVC1G97DBVRG4	ACTIVE	SOT-23	DBV	6	3000	Green (RoHS & no Sb/Br)	CU NIPDAU	Level-1-260C-UNLIM	-40 to 125	(C975, C97K, C97R)	Samples
SN74LVC1G97DBVT	ACTIVE	SOT-23	DBV	6	250	Green (RoHS & no Sb/Br)	CU NIPDAU	Level-1-260C-UNLIM	-40 to 125	(C975, C97K, C97R)	Samples
SN74LVC1G97DBVTG4	ACTIVE	SOT-23	DBV	6	250	Green (RoHS & no Sb/Br)	CU NIPDAU	Level-1-260C-UNLIM	-40 to 125	(C975, C97K, C97R)	Samples
SN74LVC1G97DCK3	ACTIVE	SC70	DCK	6	3000	Pb-Free (RoHS)	CU SNBI	Level-1-260C-UNLIM	-40 to 125	CSZ	Samples
SN74LVC1G97DCKR	ACTIVE	SC70	DCK	6	3000	Green (RoHS & no Sb/Br)	CU NIPDAU	Level-1-260C-UNLIM	-40 to 125	(CS5, CSF, CSK, CSR)	Samples
SN74LVC1G97DCKRE4	ACTIVE	SC70	DCK	6	3000	Green (RoHS & no Sb/Br)	CU NIPDAU	Level-1-260C-UNLIM	-40 to 125	(CS5, CSF, CSK, CSR)	Samples
SN74LVC1G97DCKRG4	ACTIVE	SC70	DCK	6	3000	Green (RoHS & no Sb/Br)	CU NIPDAU	Level-1-260C-UNLIM	-40 to 125	(CS5, CSF, CSK, CSR)	Samples
SN74LVC1G97DCKT	ACTIVE	SC70	DCK	6	250	Green (RoHS & no Sb/Br)	CU NIPDAU	Level-1-260C-UNLIM	-40 to 125	(CS5, CSF, CSK, CSR)	Samples
SN74LVC1G97DCKTG4	ACTIVE	SC70	DCK	6	250	Green (RoHS & no Sb/Br)	CU NIPDAU	Level-1-260C-UNLIM	-40 to 125	(CS5, CSF, CSK, CSR)	Samples
SN74LVC1G97DRLR	ACTIVE	SOT-5X3	DRL	6	4000	Green (RoHS & no Sb/Br)	CU NIPDAU	Level-1-260C-UNLIM	-40 to 125	(CS7, CSR)	Samples
SN74LVC1G97DRYR	ACTIVE	SON	DRY	6	5000	Green (RoHS & no Sb/Br)	CU NIPDAU	Level-1-260C-UNLIM	-40 to 125	CS	Samples
SN74LVC1G97DSFR	ACTIVE	SON	DSF	6	5000	Green (RoHS & no Sb/Br)	CU NIPDAU	Level-1-260C-UNLIM	-40 to 125	CS	Samples
SN74LVC1G97YZPR	ACTIVE	DSBGA	YZP	6	3000	Green (RoHS & no Sb/Br)	SNAGCU	Level-1-260C-UNLIM	-40 to 85	CSN	Samples

(1) The marketing status values are defined as follows:
ACTIVE: Product device recommended for new designs.
LIFEBUY: TI has announced that the device will be discontinued, and a lifetime-buy period is in effect.
NRND: Not recommended for new designs. Device is in production to support existing customers, but TI does not recommend using this part in a new design.

PREVIEW: Device has been announced but is not in production. Samples may or may not be available.
OBSOLETE: TI has discontinued the production of the device.

(2) **RoHS:** TI defines "RoHS" to mean semiconductor products that are compliant with the current EU RoHS requirements for all 10 RoHS substances, including the requirement that RoHS substance do not exceed 0.1% by weight in homogeneous materials. Where designed to be soldered at high temperatures, "RoHS" products are suitable for use in specified lead-free processes. TI may reference these types of products as "Pb-Free".
RoHS Exempt: TI defines "RoHS Exempt" to mean products that contain lead but are compliant with EU RoHS pursuant to a specific EU RoHS exemption.
Green: TI defines "Green" to mean the content of Chlorine (Cl) and Bromine (Br) based flame retardants meet JS709B low halogen requirements of <=1000ppm threshold. Antimony trioxide based flame retardants must also meet the <=1000ppm threshold requirement.

(3) MSL, Peak Temp. - The Moisture Sensitivity Level rating according to the JEDEC industry standard classifications, and peak solder temperature.

(4) There may be additional marking, which relates to the logo, the lot trace code information, or the environmental category on the device.

(5) Multiple Device Markings will be inside parentheses. Only one Device Marking contained in parentheses and separated by a "~" will appear on a device. If a line is indented then it is a continuation of the previous line and the two combined represent the entire Device Marking for that device.

(6) Lead/Ball Finish - Orderable Devices may have multiple material finish options. Finish options are separated by a vertical ruled line. Lead/Ball Finish values may wrap to two lines if the finish value exceeds the maximum column width.

Important Information and Disclaimer: The information provided on this page represents TI's knowledge and belief as of the date that it is provided. TI bases its knowledge and belief on information provided by third parties, and makes no representation or warranty as to the accuracy of such information. Efforts are underway to better integrate information from third parties. TI has taken and continues to take reasonable steps to provide representative and accurate information but may not have conducted destructive testing or chemical analysis on incoming materials and chemicals. TI and TI suppliers consider certain information to be proprietary, and thus CAS numbers and other limited information may not be available for release.

In no event shall TI's liability arising out of such information exceed the total purchase price of the TI part(s) at issue in this document sold by TI to Customer on an annual basis.

OTHER QUALIFIED VERSIONS OF SN74LVC1G97 :

- Automotive: SN74LVC1G97-Q1
- Enhanced Product: SN74LVC1G97-EP

NOTE: Qualified Version Definitions:

- Automotive - Q100 devices qualified for high-reliability automotive applications targeting zero defects
- Enhanced Product - Supports Defense, Aerospace and Medical Applications

TAPE AND REEL INFORMATION

REEL DIMENSIONS

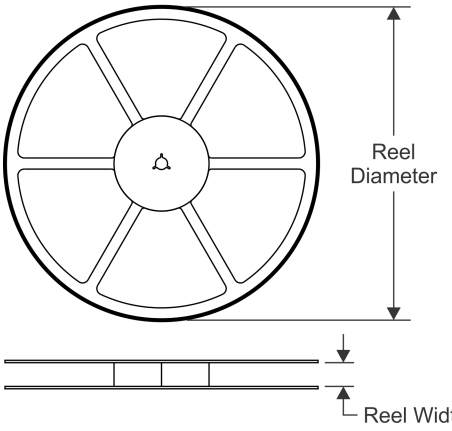

TAPE DIMENSIONS

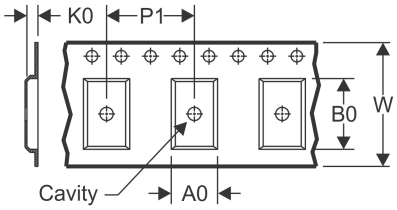

A0	Dimension designed to accommodate the component width
B0	Dimension designed to accommodate the component length
K0	Dimension designed to accommodate the component thickness
W	Overall width of the carrier tape
P1	Pitch between successive cavity centers

QUADRANT ASSIGNMENTS FOR PIN 1 ORIENTATION IN TAPE

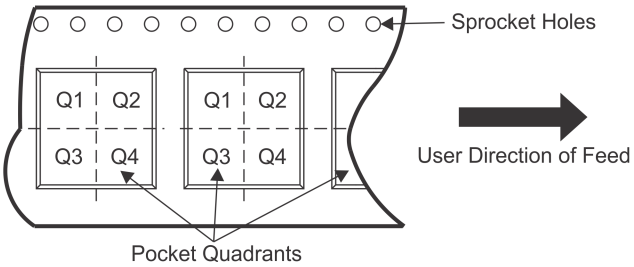

*All dimensions are nominal

Device	Package Type	Package Drawing	Pins	SPQ	Reel Diameter (mm)	Reel Width W1 (mm)	A0 (mm)	B0 (mm)	K0 (mm)	P1 (mm)	W (mm)	Pin1 Quadrant
SN74LVC1G97DBVR	SOT-23	DBV	6	3000	180.0	8.4	3.23	3.17	1.37	4.0	8.0	Q3
SN74LVC1G97DBVR	SOT-23	DBV	6	3000	178.0	9.2	3.3	3.23	1.55	4.0	8.0	Q3
SN74LVC1G97DBVT	SOT-23	DBV	6	250	178.0	9.2	3.3	3.23	1.55	4.0	8.0	Q3
SN74LVC1G97DCKR	SC70	DCK	6	3000	178.0	9.2	2.4	2.4	1.22	4.0	8.0	Q3
SN74LVC1G97DCKR	SC70	DCK	6	3000	178.0	9.0	2.4	2.5	1.2	4.0	8.0	Q3
SN74LVC1G97DCKR	SC70	DCK	6	3000	180.0	9.2	2.3	2.55	1.2	4.0	8.0	Q3
SN74LVC1G97DCKT	SC70	DCK	6	250	180.0	9.2	2.3	2.55	1.2	4.0	8.0	Q3
SN74LVC1G97DCKT	SC70	DCK	6	250	178.0	9.0	2.4	2.5	1.2	4.0	8.0	Q3
SN74LVC1G97DCKT	SC70	DCK	6	250	178.0	9.2	2.4	2.4	1.22	4.0	8.0	Q3
SN74LVC1G97DRLR	SOT-5X3	DRL	6	4000	180.0	8.4	1.98	1.78	0.69	4.0	8.0	Q3
SN74LVC1G97DRLR	SOT-5X3	DRL	6	4000	180.0	9.5	1.78	1.78	0.69	4.0	8.0	Q3
SN74LVC1G97DRYR	SON	DRY	6	5000	180.0	9.5	1.15	1.6	0.75	4.0	8.0	Q1
SN74LVC1G97DSFR	SON	DSF	6	5000	180.0	9.5	1.16	1.16	0.5	4.0	8.0	Q2
SN74LVC1G97YZPR	DSBGA	YZP	6	3000	178.0	9.2	1.02	1.52	0.63	4.0	8.0	Q1

TAPE AND REEL BOX DIMENSIONS

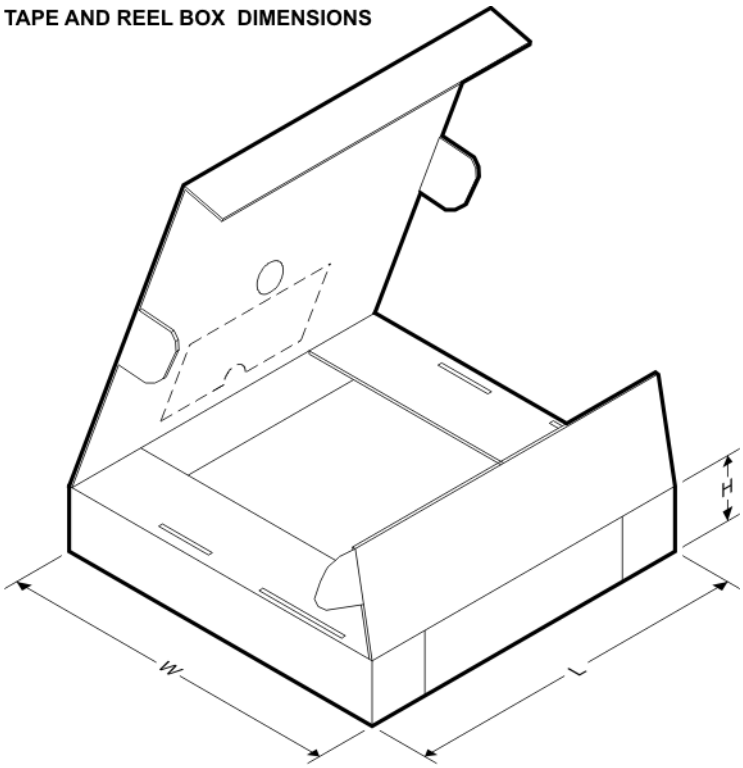

*All dimensions are nominal

Device	Package Type	Package Drawing	Pins	SPQ	Length (mm)	Width (mm)	Height (mm)
SN74LVC1G97DBVR	SOT-23	DBV	6	3000	202.0	201.0	28.0
SN74LVC1G97DBVR	SOT-23	DBV	6	3000	180.0	180.0	18.0
SN74LVC1G97DBVT	SOT-23	DBV	6	250	180.0	180.0	18.0
SN74LVC1G97DCKR	SC70	DCK	6	3000	180.0	180.0	18.0
SN74LVC1G97DCKR	SC70	DCK	6	3000	180.0	180.0	18.0
SN74LVC1G97DCKR	SC70	DCK	6	3000	205.0	200.0	33.0
SN74LVC1G97DCKT	SC70	DCK	6	250	205.0	200.0	33.0
SN74LVC1G97DCKT	SC70	DCK	6	250	180.0	180.0	18.0
SN74LVC1G97DCKT	SC70	DCK	6	250	180.0	180.0	18.0
SN74LVC1G97DRLR	SOT-5X3	DRL	6	4000	202.0	201.0	28.0
SN74LVC1G97DRLR	SOT-5X3	DRL	6	4000	184.0	184.0	19.0
SN74LVC1G97DRYR	SON	DRY	6	5000	184.0	184.0	19.0
SN74LVC1G97DSFR	SON	DSF	6	5000	184.0	184.0	19.0
SN74LVC1G97YZPR	DSBGA	YZP	6	3000	220.0	220.0	35.0

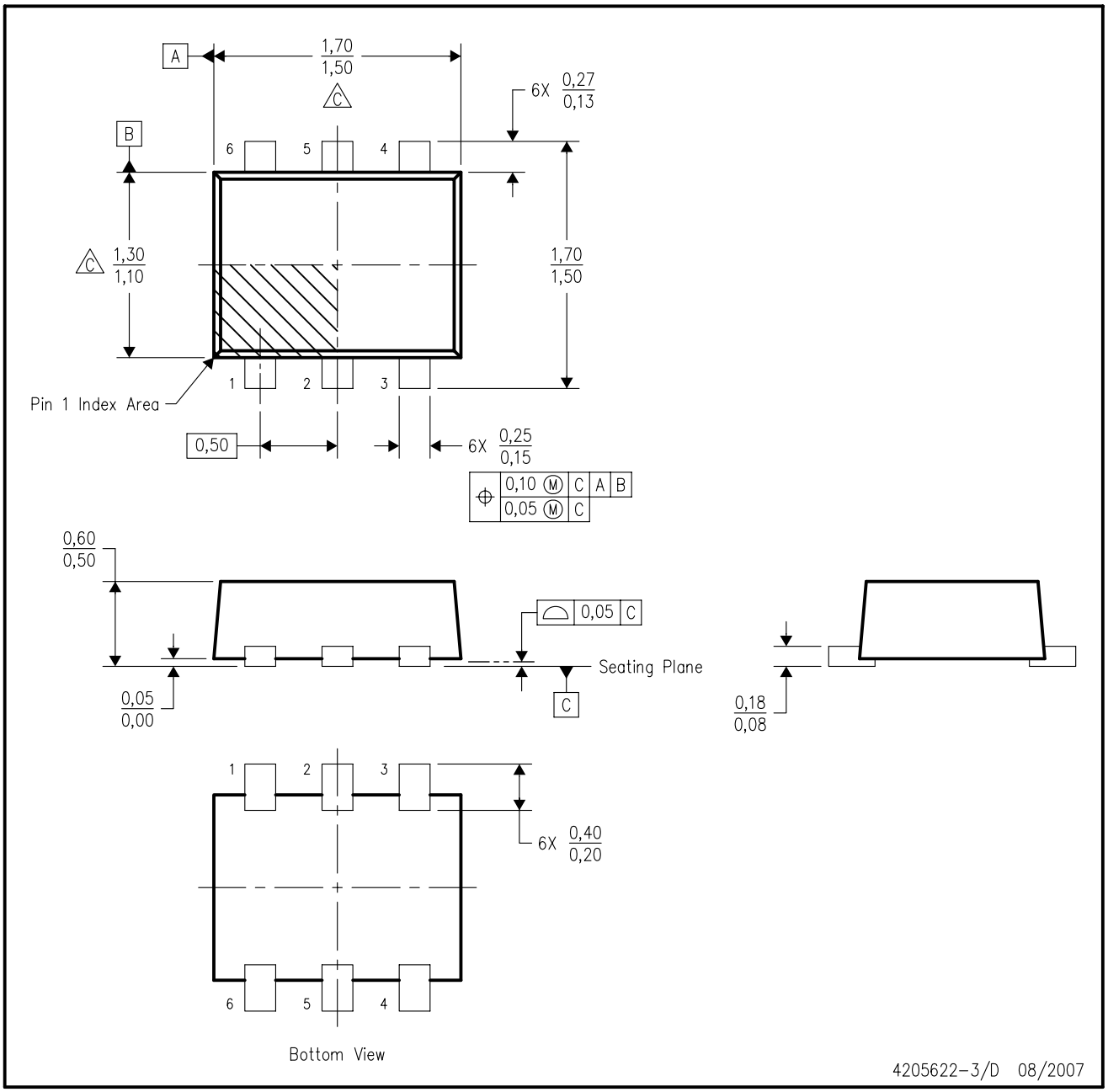

NOTES:
A. All linear dimensions are in millimeters. Dimensioning and tolerancing per ASME Y14.5M–1994.
B. This drawing is subject to change without notice.
C. Body dimensions do not include mold flash, interlead flash, protrusions, or gate burrs. Mold flash, interlead flash, protrusions, or gate burrs shall not exceed 0,15 per end or side.
D. JEDEC package registration is pending.

DRL (R–PDSO–N6) PLASTIC SMALL OUTLINE

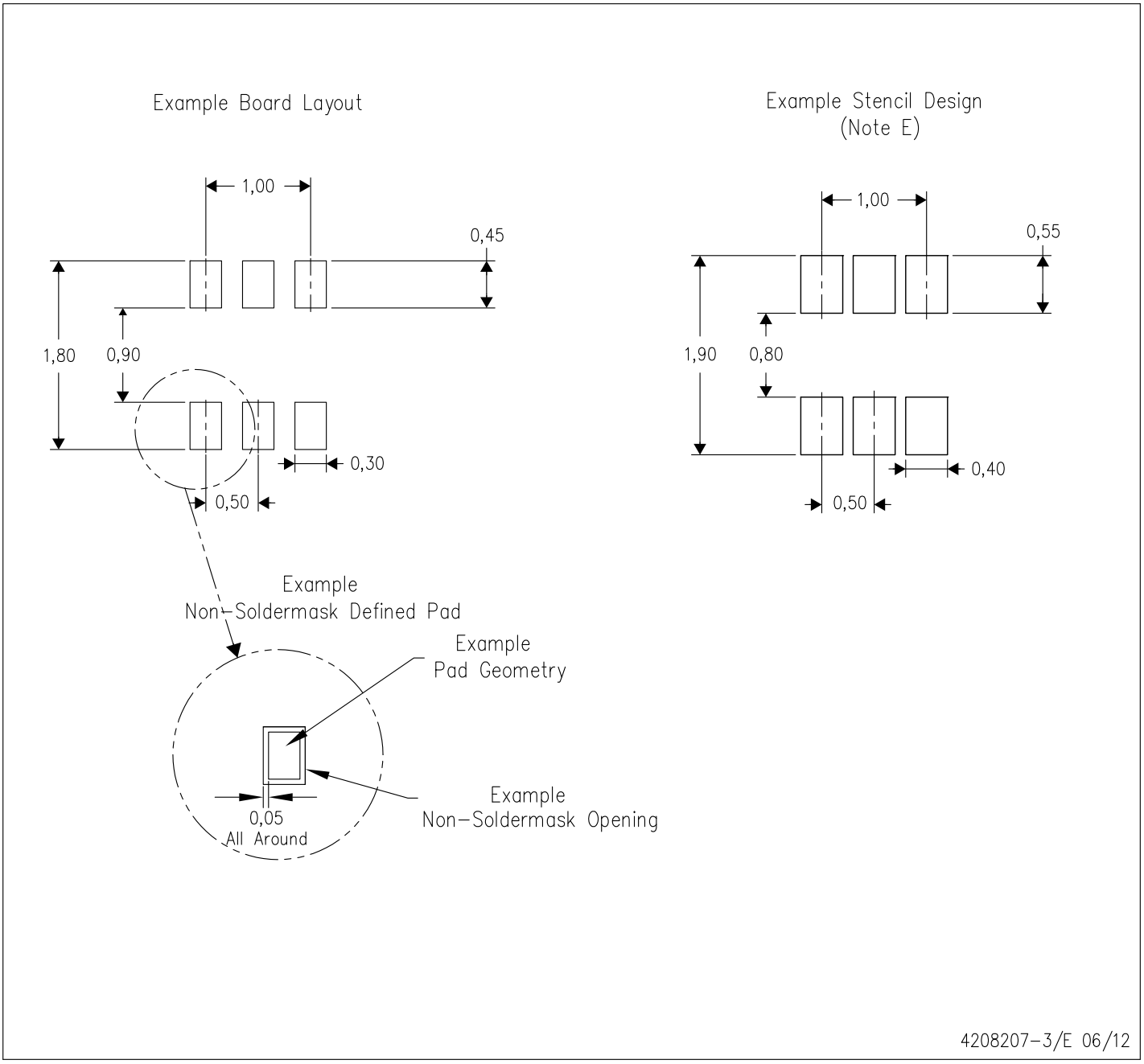

NOTES:
A. All linear dimensions are in millimeters.
B. This drawing is subject to change without notice.
C. Publication IPC–7351 is recommended for alternate designs.
D. Customers should contact their board fabrication site for minimum solder mask web tolerances between signal pads.
E. Maximum stencil thickness 0,127 mm (5 mils). All linear dimensions are in millimeters.
F. Laser cutting apertures with trapezoidal walls and also rounding corners will offer better paste release. Customers should contact their board assembly site for stencil design recommendations. Refer to IPC 7525 for stencil design considerations.
G. Side aperture dimensions over–print land for acceptable area ratio > 0.66. Customer may reduce side aperture dimensions if stencil manufacturing process allows for sufficient release at smaller opening.

Images above are just a representation of the package family, actual package may vary.
Refer to the product data sheet for package details.

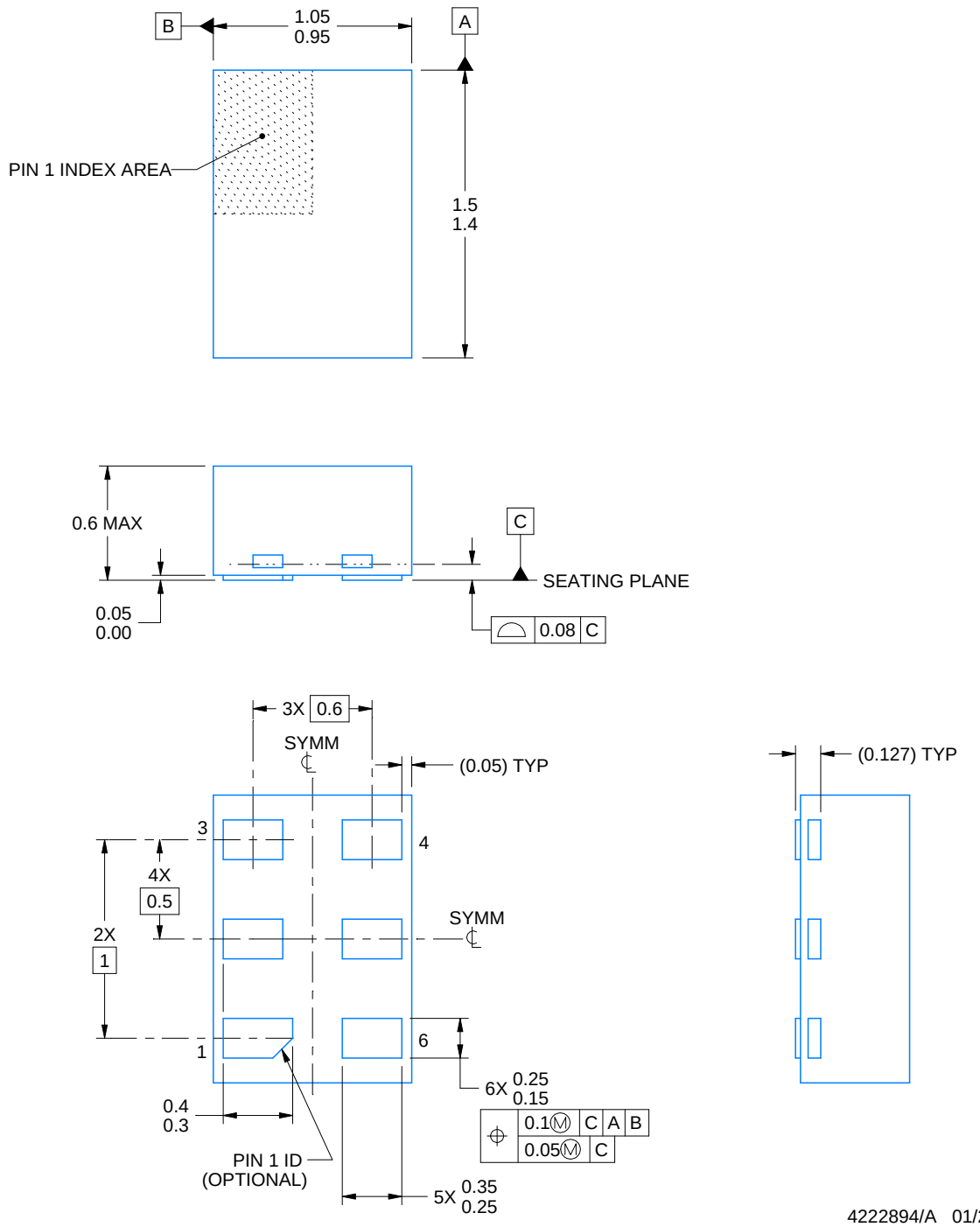

NOTES:

1. All linear dimensions are in millimeters. Any dimensions in parenthesis are for reference only. Dimensioning and tolerancing per ASME Y14.5M.
2. This drawing is subject to change without notice.

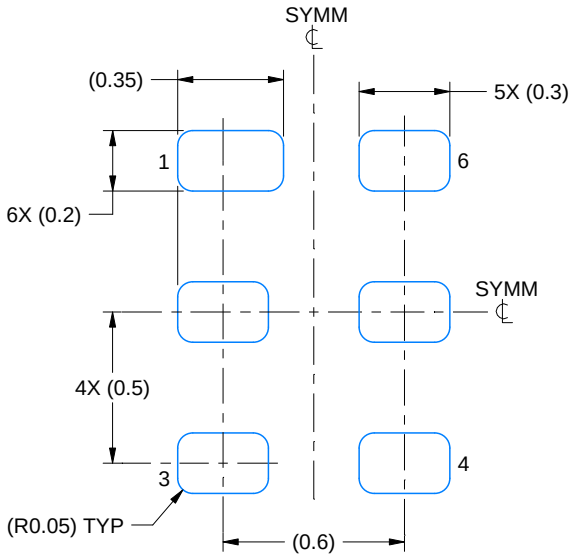

LAND PATTERN EXAMPLE
1:1 RATIO WITH PKG SOLDER PADS
EXPOSED METAL SHOWN
SCALE:40X

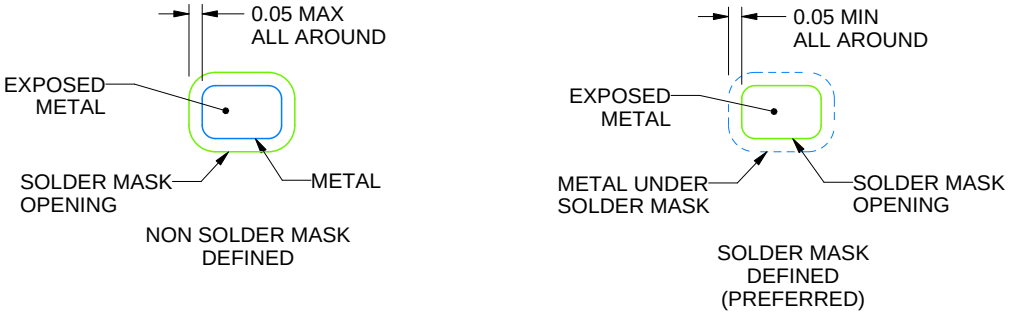

SOLDER MASK DETAILS

4222894/A 01/2018

NOTES: (continued)

3. For more information, see QFN/SON PCB application report in literature No. SLUA271 (www.ti.com/lit/slua271).

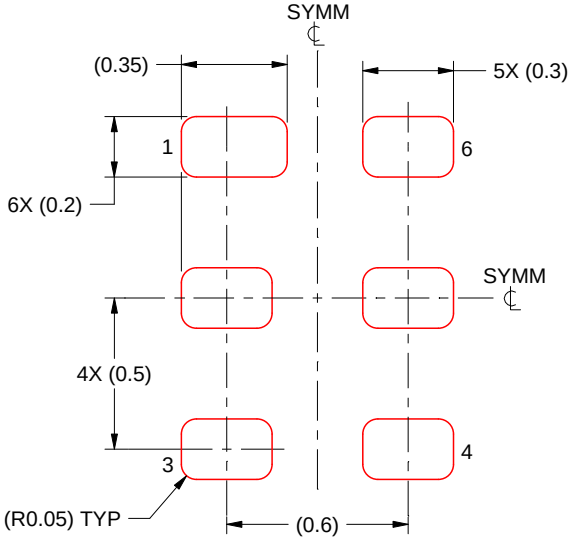

SOLDER PASTE EXAMPLE
BASED ON 0.075 - 0.1 mm THICK STENCIL
SCALE:40X

4222894/A 01/2018

NOTES: (continued)

4. Laser cutting apertures with trapezoidal walls and rounded corners may offer better paste release. IPC-7525 may have alternate design recommendations.

DBV (R–PDSO–G6) PLASTIC SMALL–OUTLINE PACKAGE

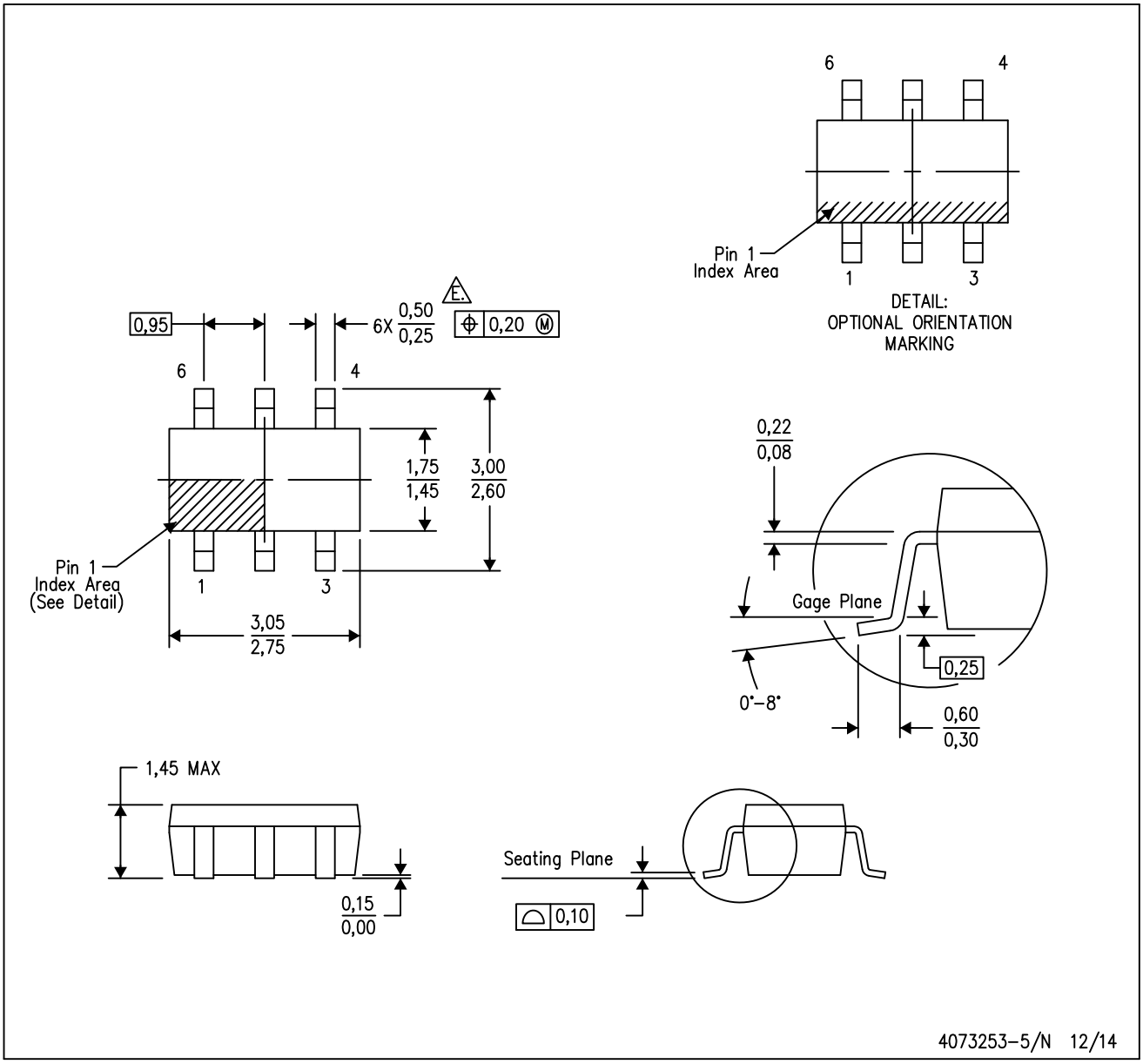

NOTES:
- A. All linear dimensions are in millimeters.
- B. This drawing is subject to change without notice.
- C. Body dimensions do not include mold flash or protrusion. Mold flash and protrusion shall not exceed 0.15 per side.
- D. Leads 1,2,3 may be wider than leads 4,5,6 for package orientation.
- E. Falls within JEDEC MO–178 Variation AB, except minimum lead width.

DBV (R-PDSO-G6) PLASTIC SMALL OUTLINE

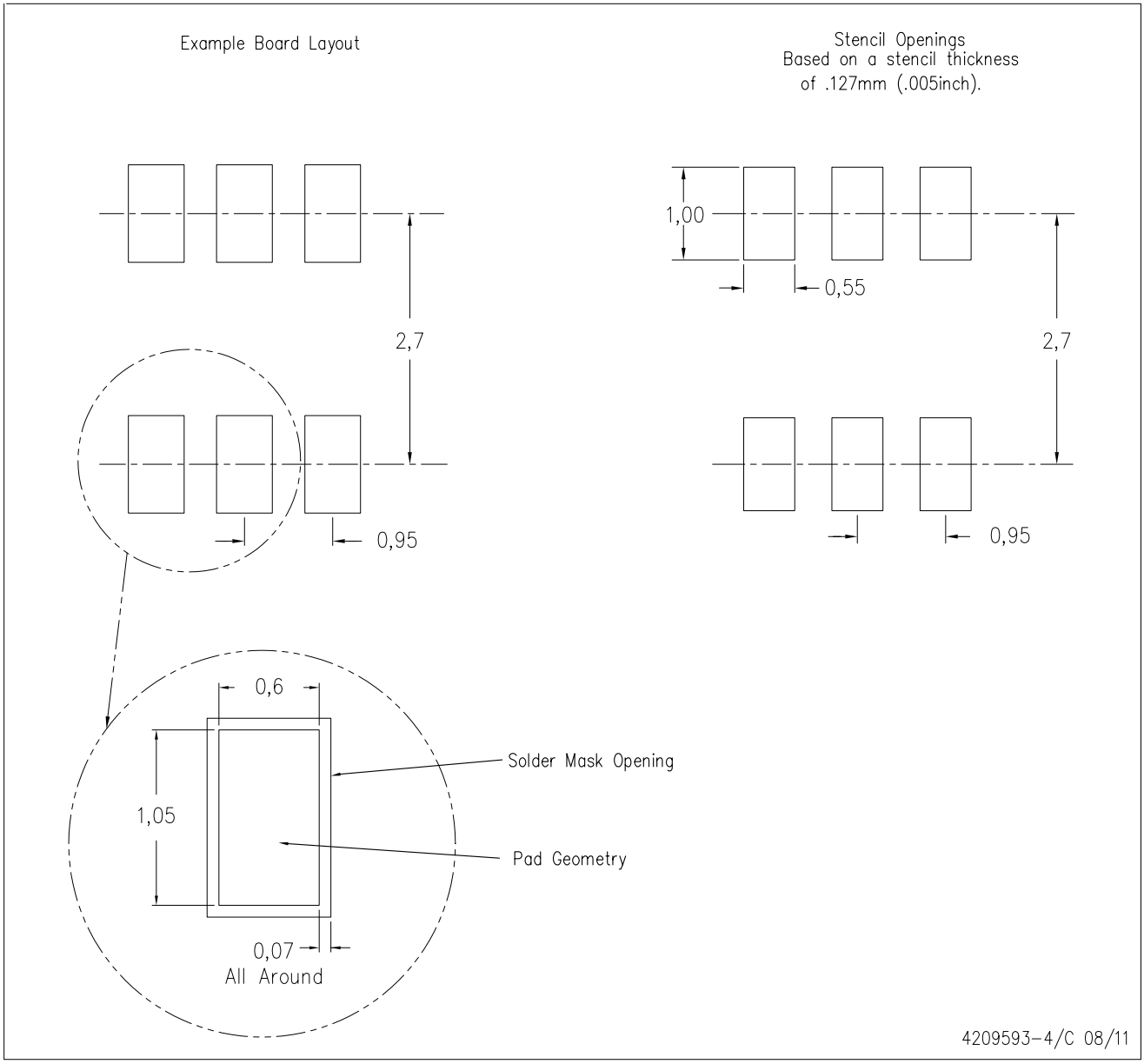

NOTES:
A. All linear dimensions are in millimeters.
B. This drawing is subject to change without notice.
C. Customers should place a note on the circuit board fabrication drawing not to alter the center solder mask defined pad.
D. Publication IPC-7351 is recommended for alternate designs.
E. Laser cutting apertures with trapezoidal walls and also rounding corners will offer better paste release. Customers should contact their board assembly site for stencil design recommendations. Example stencil design based on a 50% volumetric metal load solder paste. Refer to IPC-7525 for other stencil recommendations.

DCK (R–PDSO–G6) PLASTIC SMALL–OUTLINE PACKAGE

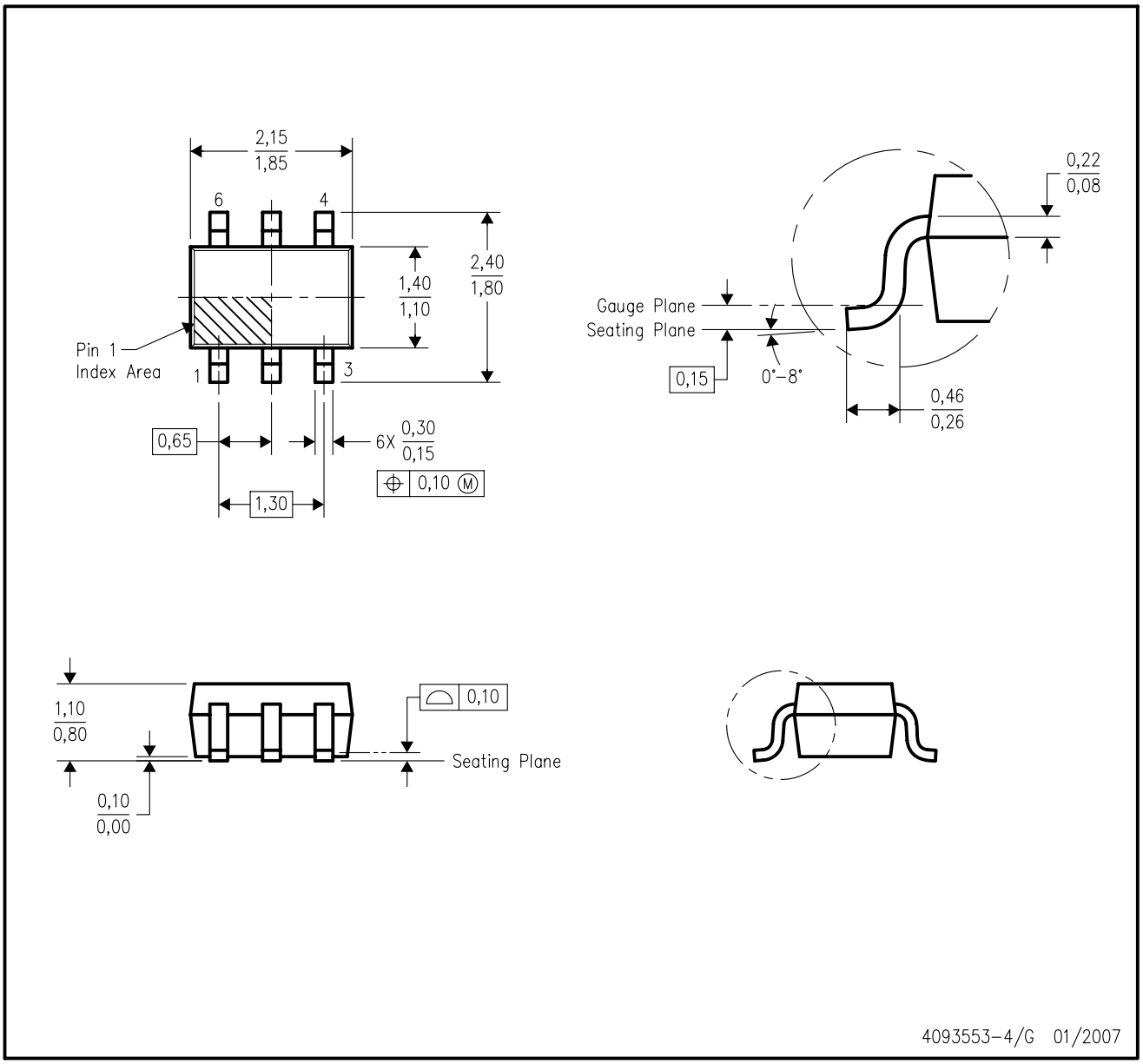

NOTES:
A. All linear dimensions are in millimeters.
B. This drawing is subject to change without notice.
C. Body dimensions do not include mold flash or protrusion. Mold flash and protrusion shall not exceed 0.15 per side.
D. Falls within JEDEC MO–203 variation AB.

DCK (R-PDSO-G6) PLASTIC SMALL OUTLINE

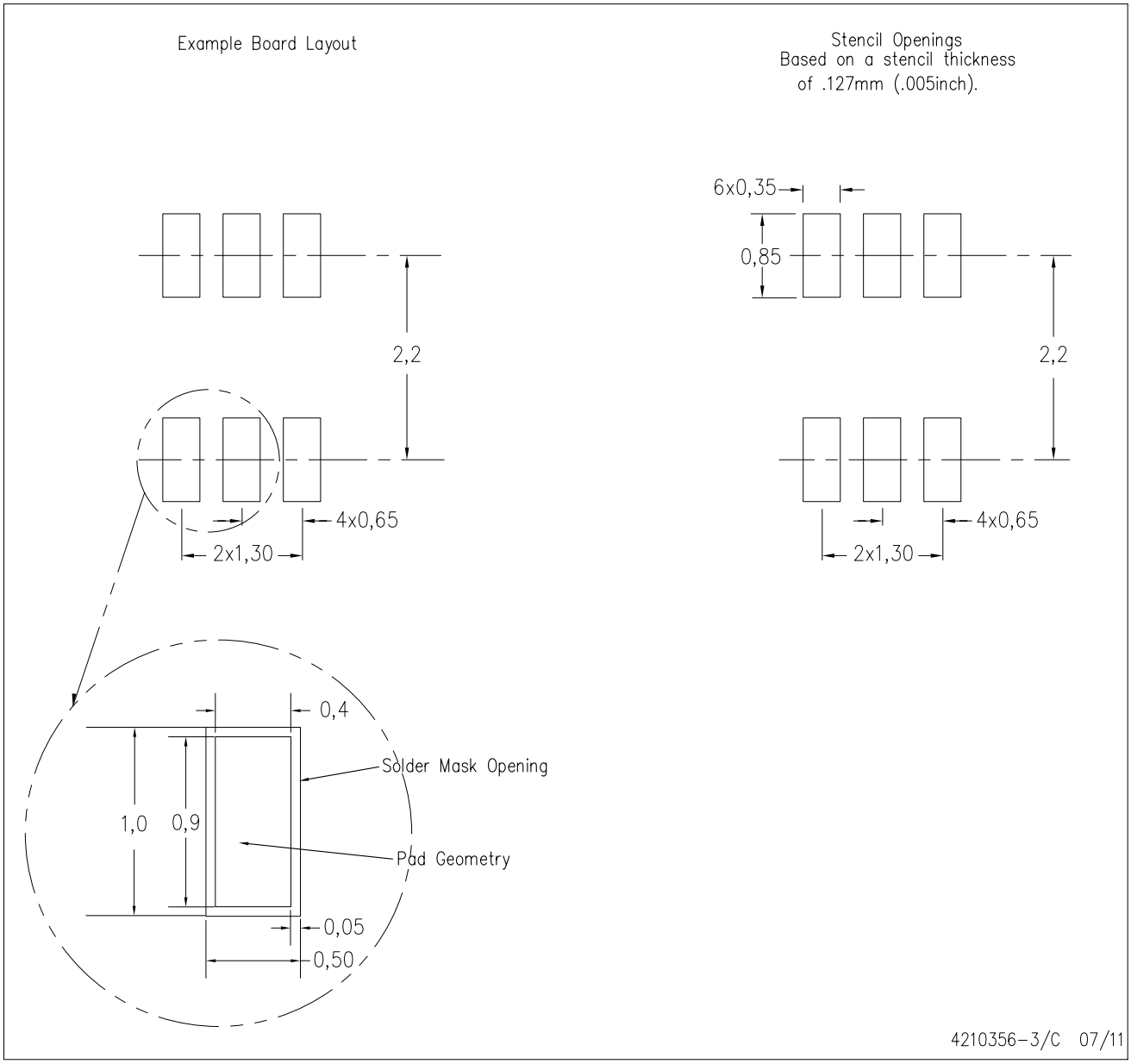

NOTES:
A. All linear dimensions are in millimeters.
B. This drawing is subject to change without notice.
C. Customers should place a note on the circuit board fabrication drawing not to alter the center solder mask defined pad.
D. Publication IPC-7351 is recommended for alternate designs.
E. Laser cutting apertures with trapezoidal walls and also rounding corners will offer better paste release. Customers should contact their board assembly site for stencil design recommendations. Example stencil design based on a 50% volumetric metal load solder paste. Refer to IPC-7525 for other stencil recommendations.

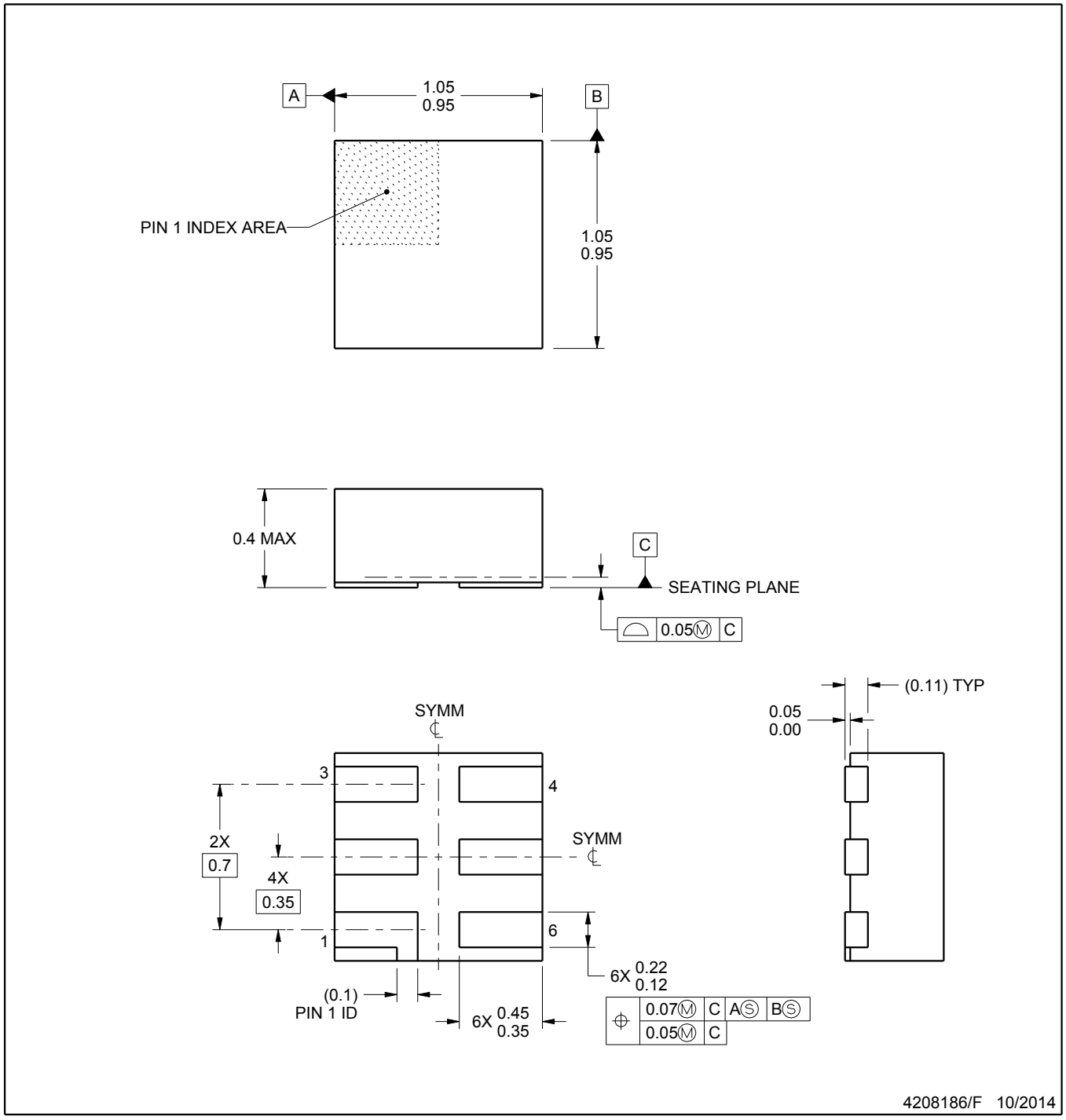

NOTES:

1. All linear dimensions are in millimeters. Any dimensions in parenthesis are for reference only. Dimensioning and tolerancing per ASME Y14.5M.
2. This drawing is subject to change without notice.
3. Reference JEDEC registration MO-287, variation X2AAF.

DSF (S–PX2SON–N6) PLASTIC SMALL OUTLINE NO–LEAD

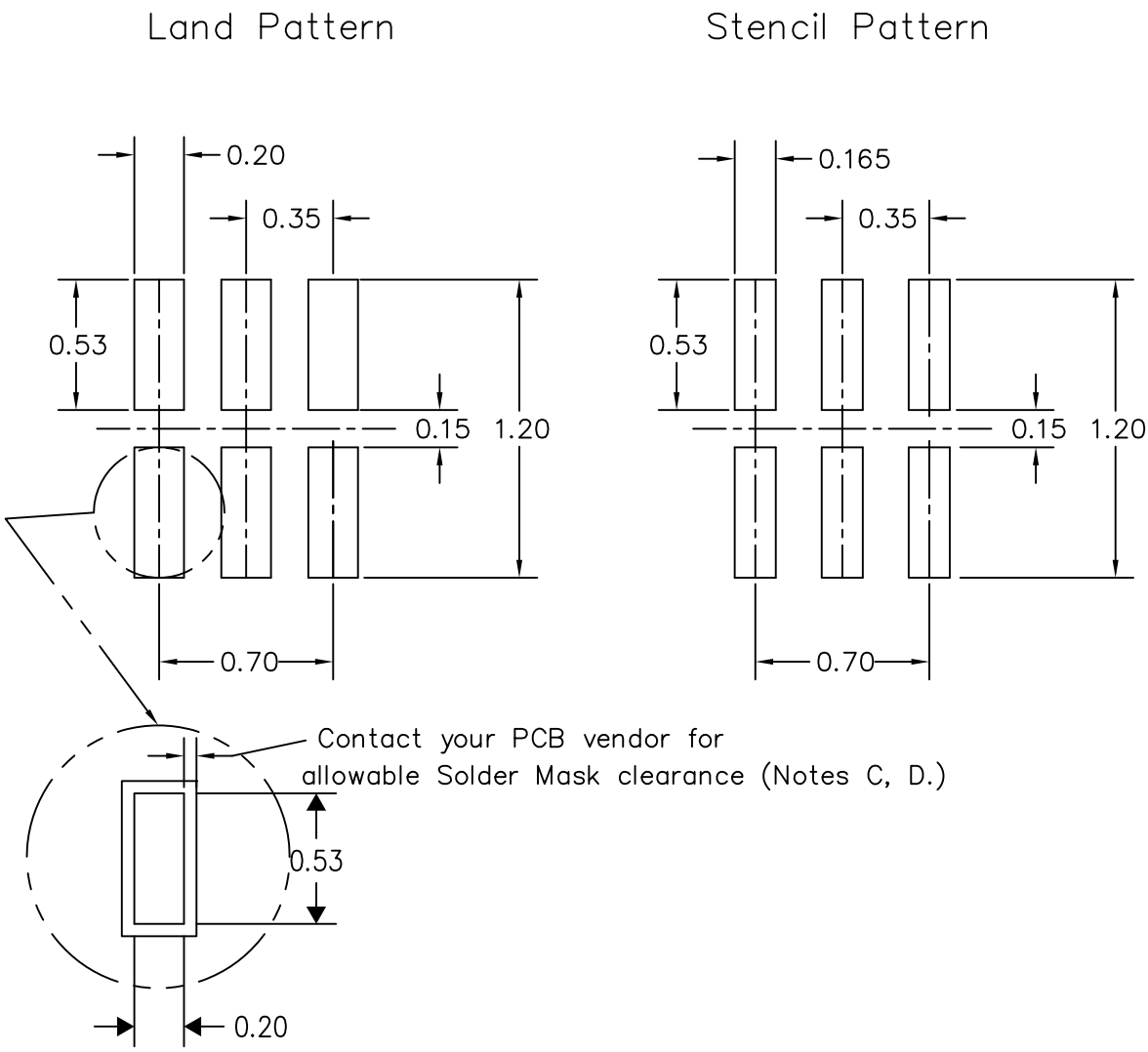

4210277/D 05/12

NOTES:
A. All linear dimensions are in millimeters.
B. This drawing is subject to change without notice.
C. Publication IPC–7351 is recommended for alternate designs.
D. Customers should contact their board fabrication site for minimum solder mask web tolerances between signal pads. If 2 mil solder mask is outside PCB vendor capability, it is advised to omit solder mask.
E. Maximum stencil thickness 0,1016 mm (4 mils). All linear dimensions are in millimeters.
F. Laser cutting apertures with trapezoidal walls and also rounding corners will offer better paste release. Customers should contact their board assembly site for stencil design recommendations. Refer to IPC 7525 for stencil design considerations.
G. Suggest stencils cut with lasers such as Fiber Laser that produce the greatest positional accuracy.
H. Component placement force should be minimized to prevent excessive paste block deformation.

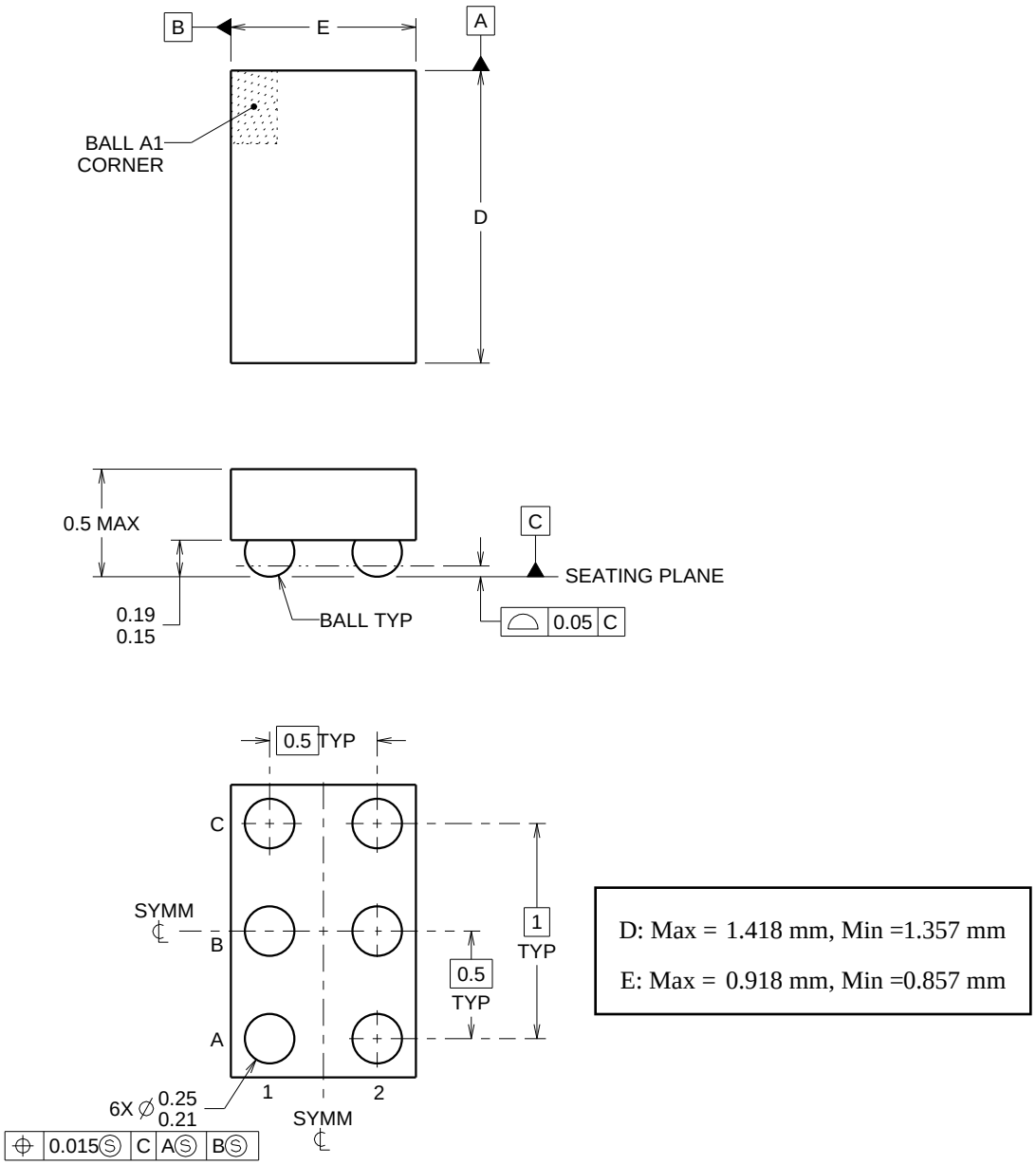

4219524/A 06/2014

NanoFree Is a trademark of Texas Instruments.

NOTES:

1. All linear dimensions are in millimeters. Any dimensions in parenthesis are for reference only. Dimensioning and tolerancing per ASME Y14.5M.
2. This drawing is subject to change without notice.
3. NanoFree™ package configuration.

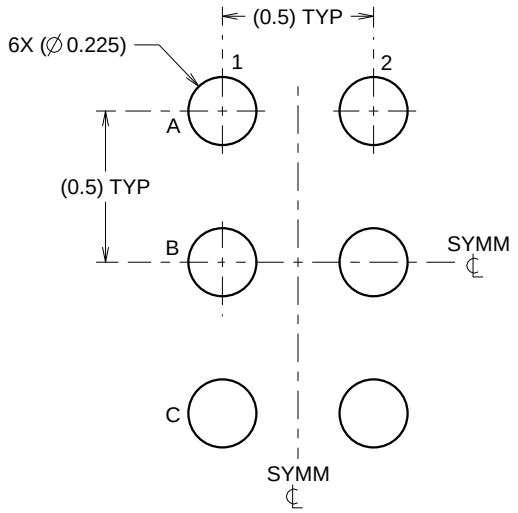

LAND PATTERN EXAMPLE
SCALE:40X

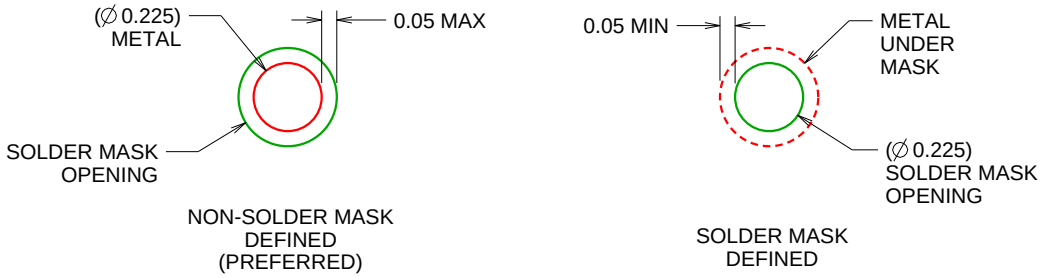

SOLDER MASK DETAILS
NOT TO SCALE

4219524/A 06/2014

NOTES: (continued)

4. Final dimensions may vary due to manufacturing tolerance considerations and also routing constraints.
   For more information, see Texas Instruments literature number SBVA017 (www.ti.com/lit/sbva017).

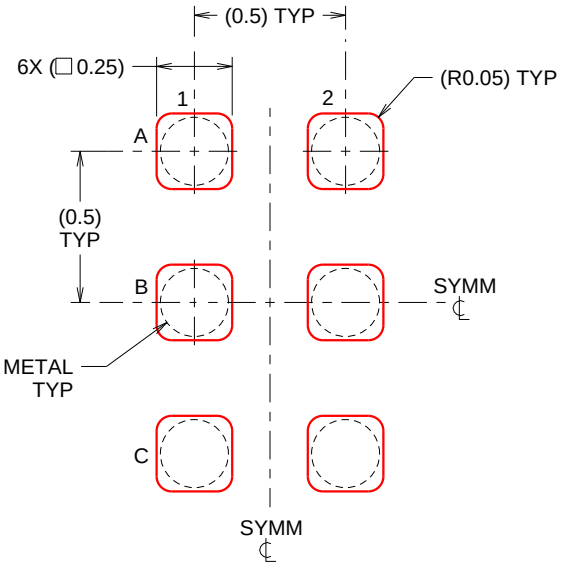

SOLDER PASTE EXAMPLE
BASED ON 0.1 mm THICK STENCIL
SCALE:40X

4219524/A 06/2014

NOTES: (continued)

5. Laser cutting apertures with trapezoidal walls and rounded corners may offer better paste release.

IMPORTANT NOTICE AND DISCLAIMER

TI PROVIDES TECHNICAL AND RELIABILITY DATA (INCLUDING DATASHEETS), DESIGN RESOURCES (INCLUDING REFERENCE DESIGNS), APPLICATION OR OTHER DESIGN ADVICE, WEB TOOLS, SAFETY INFORMATION, AND OTHER RESOURCES “AS IS” AND WITH ALL FAULTS, AND DISCLAIMS ALL WARRANTIES, EXPRESS AND IMPLIED, INCLUDING WITHOUT LIMITATION ANY IMPLIED WARRANTIES OF MERCHANTABILITY, FITNESS FOR A PARTICULAR PURPOSE OR NON-INFRINGEMENT OF THIRD PARTY INTELLECTUAL PROPERTY RIGHTS.

These resources are intended for skilled developers designing with TI products. You are solely responsible for (1) selecting the appropriate TI products for your application, (2) designing, validating and testing your application, and (3) ensuring your application meets applicable standards, and any other safety, security, or other requirements. These resources are subject to change without notice. TI grants you permission to use these resources only for development of an application that uses the TI products described in the resource. Other reproduction and display of these resources is prohibited. No license is granted to any other TI intellectual property right or to any third party intellectual property right. TI disclaims responsibility for, and you will fully indemnify TI and its representatives against, any claims, damages, costs, losses, and liabilities arising out of your use of these resources.

TI’s products are provided subject to TI’s Terms of Sale (www.ti.com/legal/termsofsale.html) or other applicable terms available either on ti.com or provided in conjunction with such TI products. TI’s provision of these resources does not expand or otherwise alter TI’s applicable warranties or warranty disclaimers for TI products.

Mailing Address: Texas Instruments, Post Office Box 655303, Dallas, Texas 75265
Copyright © 2018, Texas Instruments Incorporated