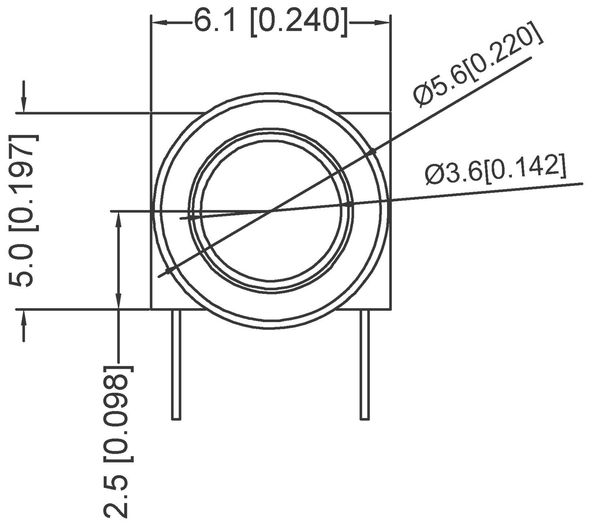

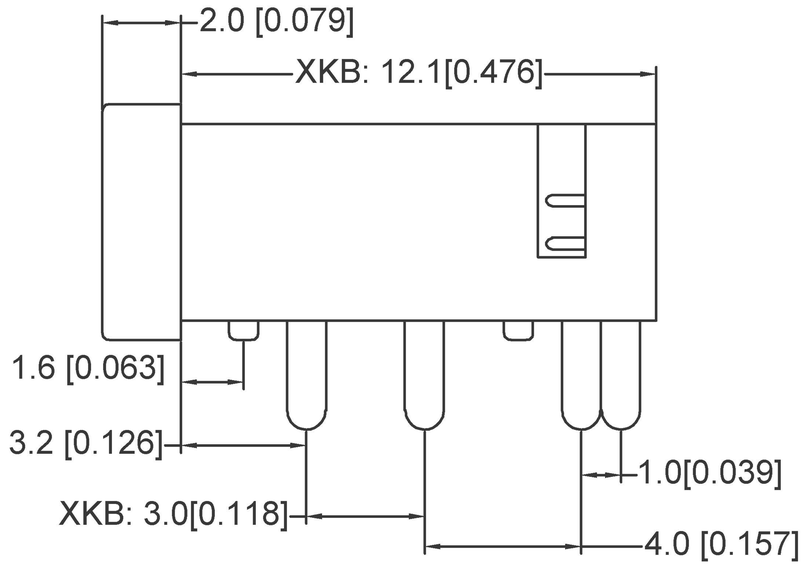

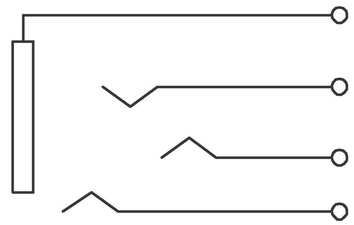

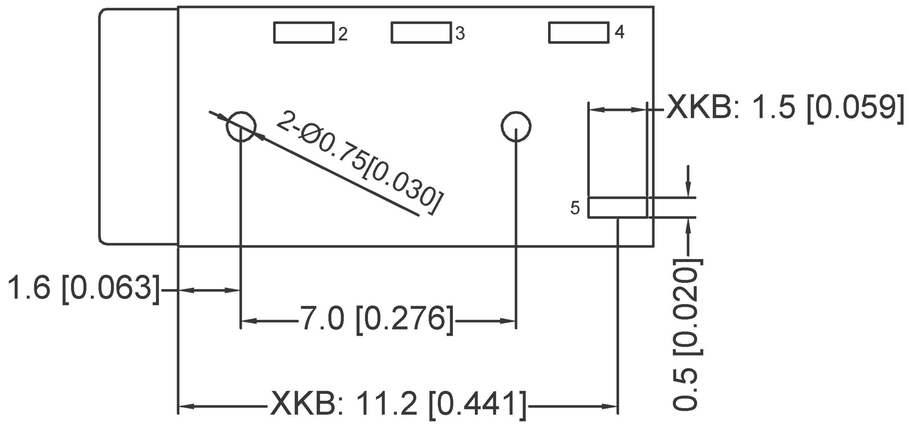

	MATERIAL	PLATING
terminal 2	H65	tin
terminal 3	H65	tin
terminal 4	H65	tin
terminal 5	H65	tin
plastic	LCP	

广东星坤科技股份有限公司

生		日
ΔX		期
ΔX		
ΔX		
MARK	DESCRIPTION	

文件工程章

DATE	REVISED	APPROVED		
			ANGLAR	±5°
			X.X	±0.2mm
			X.XX	±0.1mm
			X.XXX	±0.05mm

REVISIONS

UNSPECIFIED TOLERANCES

www.xk-dg.cn www.helloxkb.com www.helloxkb.cn

DSND		DATE		SCALE: N/A	MODEL TYPE: 3.5 PHONE JACK
DWN		DATE		VIEW:	PART NO.:
CHKD		DATE		UNIT: mm/in	DWG NO.: PJ-320AG-B
APPD		DATE		SIZE: A4	

XKB INDUSTRIAL PRECISION CO.,LIMITED

WEIGHT	SHEET	REVISION
1.0g	1/1	A0