Online data sheet

# IME30-20NP0ZW2S

IME

INDUCTIVE PROXIMITY SENSORS

SICK
Sensor Intelligence.

Illustration may differ

## Ordering information

| Type | Part no. |
|---|---|
| IME30-20NP0ZW2S | 1041052 |

Other models and accessories → www.sick.com/IME

## Detailed technical data

### Features

| | |
|---|---|
| **Housing** | Cylindrical thread design |
| **Housing** | Standard |
| **Thread size** | M30<br>1.5 |
| **Diameter** | Ø 30 mm |
| **Sensing range $S_n$** | 20 mm |
| **Safe sensing range $S_a$** | 16.2 mm |
| **Installation type** | Non-flush |
| **Switching frequency** | 500 Hz |
| **Connection type** | Cable, 3-wire, 2 m |
| **Switching output** | PNP |
| **Output function** | NC |
| **Electrical wiring** | DC 3-wire |
| **Enclosure rating** | IP67 [1] |

[1] According to EN 60529.

### Mechanics/electronics

| | |
|---|---|
| **Supply voltage** | 10 V DC ... 30 V DC |
| **Ripple** | ≤ 10 % |
| **Voltage drop** | ≤ 2 V [1] |
| **Current consumption** | ≤ 10 mA [2] |
| **Time delay before availability** | ≤ 125 ms |

[1] At $I_a$ max.
[2] Without load.
[3] Ub and Ta constant.
[4] Of Sr.

| | |
|---|---|
| **Hysteresis** | 5 % ... 15 % |
| **Reproducibility** | ≤ 2 % [3) 4)] |
| **Temperature drift (of $S_r$)** | ± 10 % |
| **EMC** | According to EN 60947-5-2 |
| **Continuous current $I_a$** | ≤ 200 mA |
| **Cable material** | PVC |
| **Short-circuit protection** | ✓ |
| **Reverse polarity protection** | ✓ |
| **Power-up pulse protection** | ✓ |
| **Shock and vibration resistance** | 30 g, 11 ms/10 Hz ... 55 Hz, 1 mm |
| **Ambient operating temperature** | –25 °C ... +75 °C |
| **Housing material** | Metal, Nickel-plated brass |
| **Sensing face material** | Plastic, Plastic |
| **Housing length** | 70 mm |
| **Thread length** | 41 mm |
| **Tightening torque, max.** | ≤ 100 Nm |
| **UL File No.** | NRKH.E181493 |

[1)] At $I_a$ max.
[2)] Without load.
[3)] Ub and Ta constant.
[4)] Of Sr.

## Reduction factors

| | |
|---|---|
| **Note** | The values are reference values which may vary |
| **St37 steel (Fe)** | 1 |
| **Stainless steel (V2A, 304)** | Approx. 0.8 |
| **Aluminum (Al)** | Approx. 0.45 |
| **Copper (Cu)** | Approx. 0.4 |
| **Brass (Br)** | Approx. 0.4 |

## Installation note

| | |
|---|---|
| **Remark** | Associated graphic see "Installation" |
| **A** | 30 mm |
| **B** | 60 mm |
| **C** | 30 mm |
| **D** | 60 mm |
| **E** | 40 mm |
| **F** | 160 mm |

## Classifications

| | |
|---|---|
| **ECl@ss 5.0** | 27270101 |
| **ECl@ss 5.1.4** | 27270101 |
| **ECl@ss 6.0** | 27270101 |
| **ECl@ss 6.2** | 27270101 |

| | |
|---|---|
| **ECl@ss 7.0** | 27270101 |
| **ECl@ss 8.0** | 27270101 |
| **ECl@ss 8.1** | 27270101 |
| **ECl@ss 9.0** | 27270101 |
| **ETIM 5.0** | EC002714 |
| **ETIM 6.0** | EC002714 |
| **UNSPSC 16.0901** | 39122230 |

## Installation note

Non-flush installation

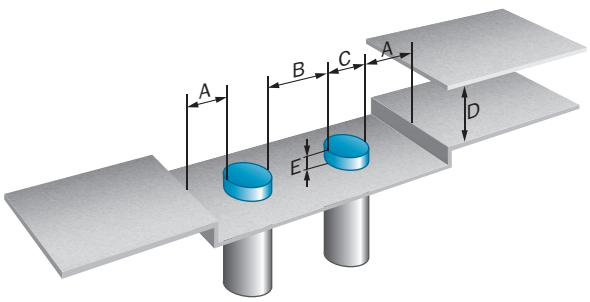


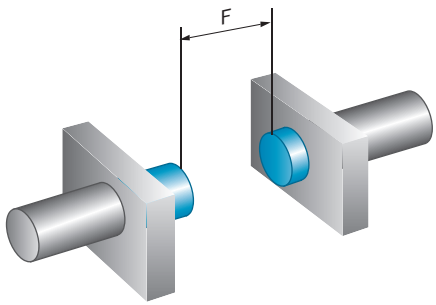


## Connection diagram

cd-003

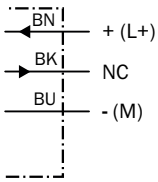

## Dimensional drawing (Dimensions in mm (inch))

IME30 Standard, cable, non-flush

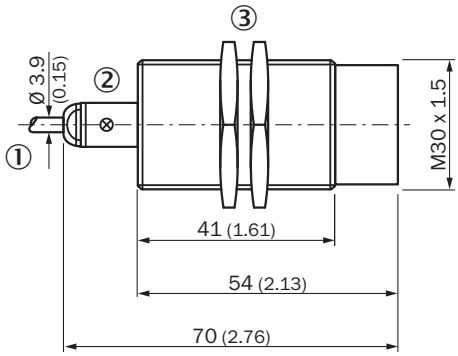


① Connection
② Indication LED
③ Fastening nuts (2x); width across 36, metal

## Recommended accessories

Other models and accessories ➜ www.sick.com/IME

| | Brief description | Type | Part no. |
|---|---|---|---|
| Universal bar clamp systems | | | |
| | Universal bar clamp for mounting bars with 12 mm diameter, Zinc diecast, without mounting plate and screws | BEF-KHS-KH3 | 5322626 |
| | Plate N10 for universal clamp bracket, M30, Zinc plated steel (sheet), Zinc die cast (clamping bracket), Universal clamp (5322626), mounting hardware | BEF-KHS-N10 | 2062372 |
| Mounting brackets and plates | | | |
| | Mounting plate for M30 sensors, steel, zinc coated, without mounting hardware | BEF-WG-M30 | 5321871 |
| | Mounting bracket for M30 sensors, steel, zinc coated, without mounting hardware | BEF-WN-M30 | 5308445 |

# SICK AT A GLANCE

SICK is one of the leading manufacturers of intelligent sensors and sensor solutions for industrial applications. A unique range of products and services creates the perfect basis for controlling processes securely and efficiently, protecting individuals from accidents and preventing damage to the environment.

We have extensive experience in a wide range of industries and understand their processes and requirements. With intelligent sensors, we can deliver exactly what our customers need. In application centers in Europe, Asia and North America, system solutions are tested and optimized in accordance with customer specifications. All this makes us a reliable supplier and development partner.

Comprehensive services complete our offering: SICK LifeTime Services provide support throughout the machine life cycle and ensure safety and productivity.

**For us, that is "Sensor Intelligence."**

# WORLDWIDE PRESENCE:

Contacts and other locations –www.sick.com



SICK
Sensor Intelligence.