CATALOG NUMBER	MATERIAL NUMBER	CONDUIT SIZE	N.P.T. FITTING SIZE	LENGTH "M"	DIAMETER "A" *REF.*	LENGTH "B" *REF.*	LENGTH "C" *REF.*	PRODUCT SELECTION NUMBER	UL LISTED	CSA APRVD
36440	1300960056	3/8"	1/2"	3.875±0.500 / 98.43±12.70	1.0 / 25	1.13 / 28.7	0.63 / 16.0	STB038P	YES	YES
36370	1300960034	1/2"	1/2"	4.625±0.500 / 117.48±12.70	1.2 / 30	1.25 / 31.8	0.63 / 16.0	STB050P		
36371	1300960036	3/4"	3/4"	5.750±0.500 / 146.05±12.70	1.4 / 36	1.50 / 38.1	0.63 / 16.0	STB075P		
36372	1300960037	1"	1"	7.000±0.500 / 177.80±12.70	1.7 / 43	1.81 / 45.9	0.75 / 19.1	STB100P		
36373	1300960038	1-1/4"	1-1/4"	8.125±1.000 / 206.38±25.40	2.0 / 51	2.31 / 58.7	0.63 / 16.0	STB125P		
36374	1300960039	1-1/2"	1-1/2"	9.250±1.000 / 234.95±25.40	2.5 / 64	2.63 / 66.8	0.63 / 16.0	STB150P		
36375	1300960040	2"	2"	11.500±1.000 / 292.10±25.40	3.0 / 76	3.19 / 81.0	0.69 / 17.5	STB200P		
37030	1300960065	2-1/2"	2-1/2"	11.250±1.000 / 285.75±25.40	3.6 / 91	3.94 / 100.1	1.06 / 26.9	STB250P		
37031	1300960066	3"	3"	14.750±1.500 / 374.65±38.10	4.3 / 109	4.38 / 111.3	1.19 / 30.2	STB300P		
37032	1300960067	4"	4"	16.250±1.500 / 412.75±38.10	5.4 / 137	5.50 / 139.7	1.25 / 31.8	STB400P		

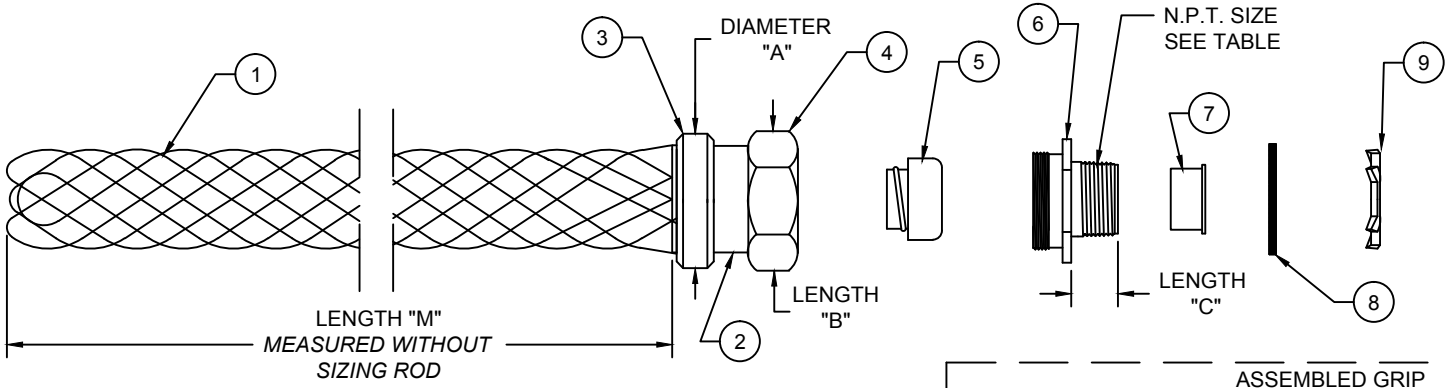

ASSEMBLED GRIP

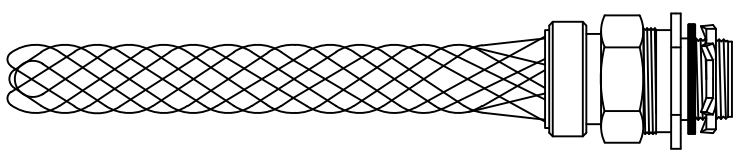

INSTRUCTIONS INCLUDED WITH GRIP

ITEM	DESCRIPTION	MATERIAL
1	WIRE MESH	STAINLESS STEEL
2	INNER RING	ZINC PLATED STEEL
3	OUTER RING	ALUMINUM
4	COMPRESSION NUT	ZINC PLATED STEEL OR MALLEABLE IRON
5	FERRULE	ZINC PLATED STEEL OR ALUMINUM
6	THREADED BODY	ZINC PLATED STEEL OR MALLEABLE IRON
7	THROAT INSULATION	PLASTIC
8	GASKET	NEOPRENE
9	LOCK NUT	ZINC PLATED STEEL

RELEASE SALES DRAWING
EC NO: IPG2015-0536 2014/09/22
DRWN: HRUIZ01 2014/09/22
CHKD: HKNEELAN 2014/09/22
APPR: JFMURPHY 2015/04/27
DESCRIPTION
A
REV

QUALITY SYMBOLS
▼=0
(C)=0

GENERAL TOLERANCES (UNLESS SPECIFIED)

	mm	INCH
4 PLACES	±---	±---
3 PLACES	±---	±.005
2 PLACES	±.13	±.010
1 PLACE	±.25	±.020

ANGULAR ±1/2°

DRAFT WHERE APPLICABLE MUST REMAIN WITHIN DIMENSIONS

DIMENSION STYLE: INCH/MM
SCALE: NTS
DESIGN UNITS: INCH
THIRD ANGLE PROJECTION

DRAWN BY: HRUIZ01 DATE: 2014/09/22
CHECKED BY: HKNEELAN DATE: 2014/09/22
APPROVED BY: JFMURPHY DATE: 2015/04/27

TITLE: STRAIN RELIEF LIQUID TIGHT CONDUIT STRAIGHT-MALE

molex MOLEX INCORPORATED

MATERIAL NO.: SEE TABLE
DOCUMENT NO.: SD-130096-100
SHEET NO.: 1 OF 1
SIZE: A

THIS DRAWING CONTAINS INFORMATION THAT IS PROPRIETARY TO MOLEX INCORPORATED AND SHOULD NOT BE USED WITHOUT WRITTEN PERMISSION