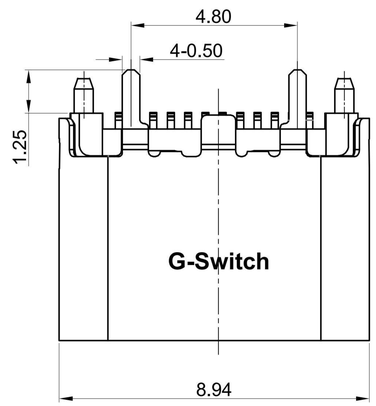

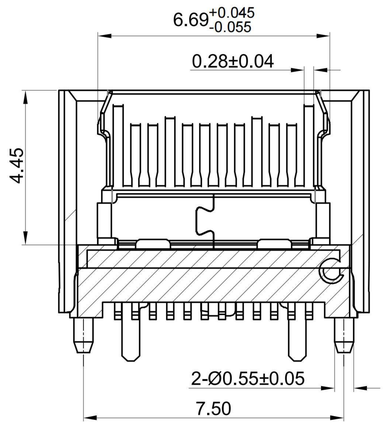

SECTION B-B
SCALE 1:1

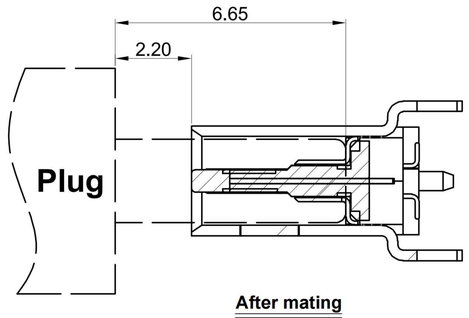

After mating

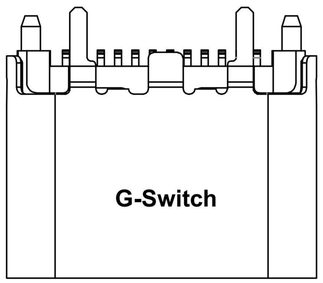

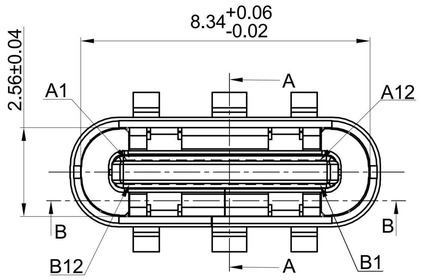

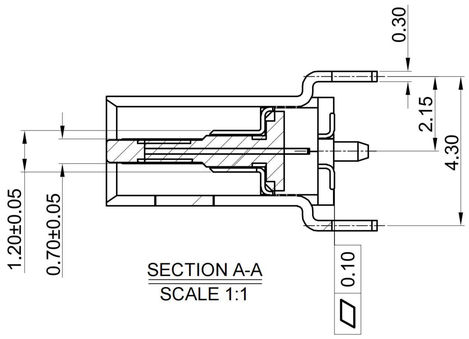

SECTION A-A
SCALE 1:1

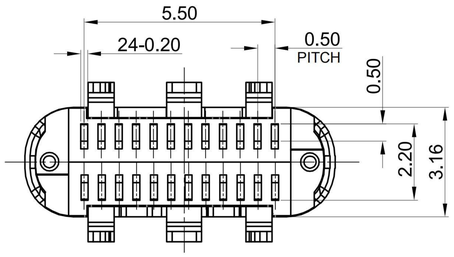

G-Switch USB-C Specification:

1.Current rating:5A on Vbus/1.25A on Vconn/0.25A on other
2.Dielectric Voltage:100V AC/minute
3. Contact resistance: 40mΩ Max
4. Insulation resistance: 100MΩ Min
5. Temperature range: -55 °C ~ 85 °C
6. Lnsertion force : 5N~20N
7.Unmating force: 8N~20N
8. Durability:10,000 Cycles
9.Data transmission rate up to 5Gbp/s

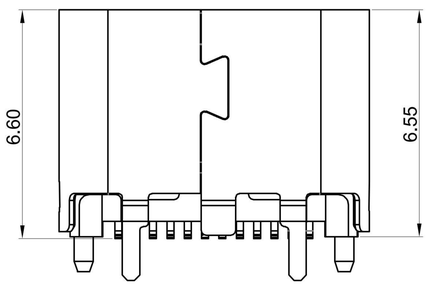

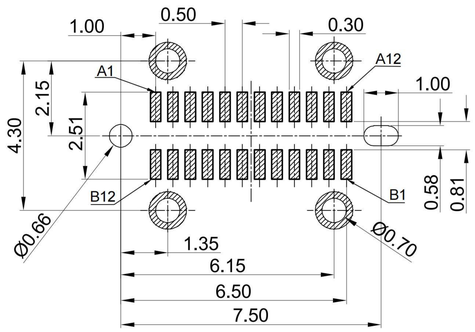

RECOMMENDED P.C.B. LAYOUT (T:1.00mm)

TOLERANCE UNSPECIFIED ±0.05mm

A1	A2	A3	A4	A5	A6	A7	A8	A9	A10	A11	A12
GND	SSTXp1	SSTXn1	VBUS	CC1	Dp1	Dn1	SBU1	VBUS	SSRXn2	SSRXp2	GND
First	Second	Second	First	Second	Second	Second	Second	First	Second	Second	First
B12	B11	B10	B9	B8	B7	B6	B5	B4	B3	B2	B1
GND	SSRXp1	SSRXn1	VBUS	SBU2	Dn2	Dp2	CC2	VBUS	SSTXn2	SSTXp2	GND
First	Second	Second	First	Second	Second	Second	Second	First	Second	Second	First

NO.	PARTS	MATERIAL	QTY	REMARKS
1	Cover Shell	SUS	1Pcs	Ni Plated
2	Shell	SUS	1Pcs	Ni Plated
3	Mid Plate	SUS	1Pcs	Ni Plated
4	Insulator	High Temperature Plastic	1Pcs	LCP Black UL 94 V-0
5	Contact	Copper Alloy	1Set	Au3u" Plating On Contact Area Ni and Matte Tin On Solder Area

Pb Process Capable

RoHS Compliant 2002/95/EC

HALOGEN Compliant Halogen Free

SCALE: 4:1	UNIT: mm	Title:	Vertical Type-c 24P Female SMT L=6.5mm				
SIZE: A4							
Unless otherwise General Tolerance:		Molde Code:	GT-USB-7052				
X.	±0.20						
X.x	±0.15						
X.xx	±0.10						
X.xxx	±0.05						
Angles	±3°	DRAWN	CHECKED	APPROVED	DATE		
		Xia	Chen	Chen	2022.11.26	REV: A0	SHEET: 1/1

品赞科技 b-Switch ®