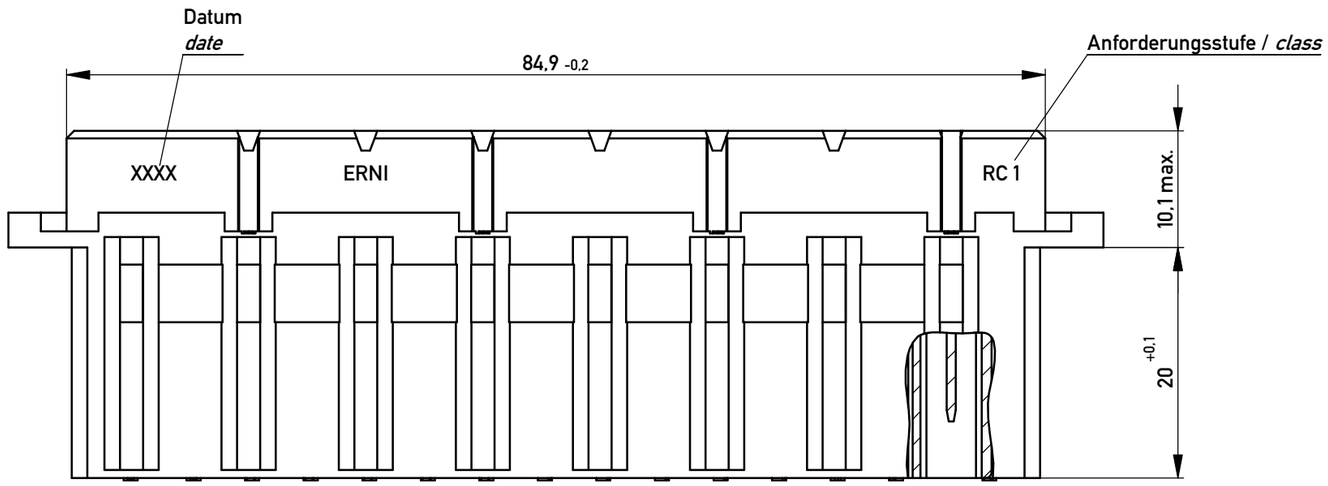

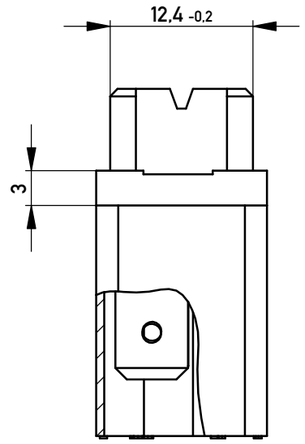

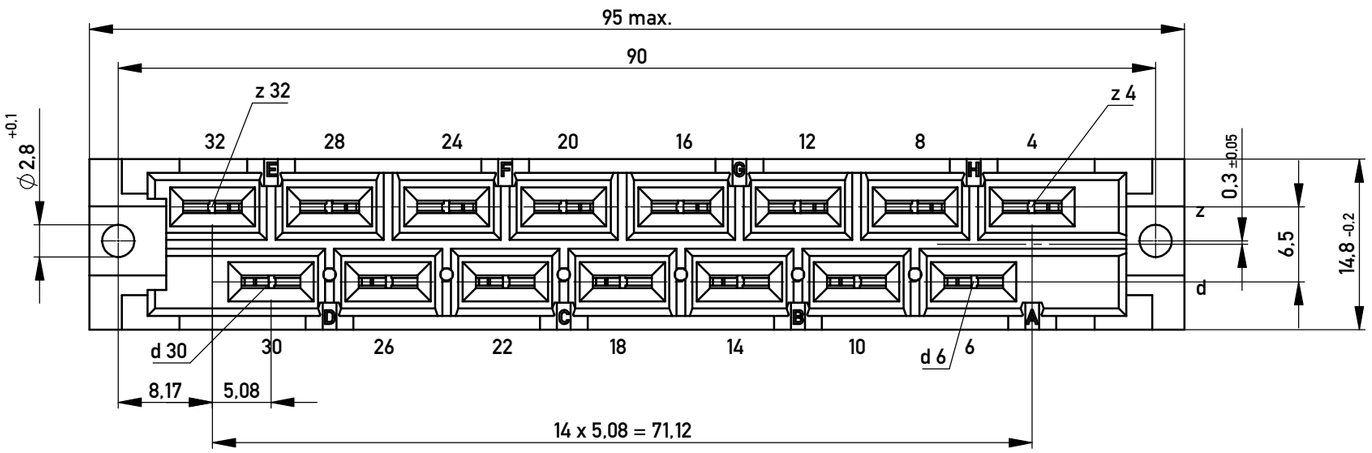

Flachstecker 6,3 x 0,8 mm / blade *terminal 6,3 x 0,8 mm*
Anforderungsstufe 1 = 500 Steckzyklen / *performance class 1 = 500 mating cycles*
Bauart 3 / *type 3*

Fehlende Masse und Angaben nach DIN EN 60603-2 /
Missing information and dimensions according to DIN EN 60603-2

Bestückungsplan / *contact layout*

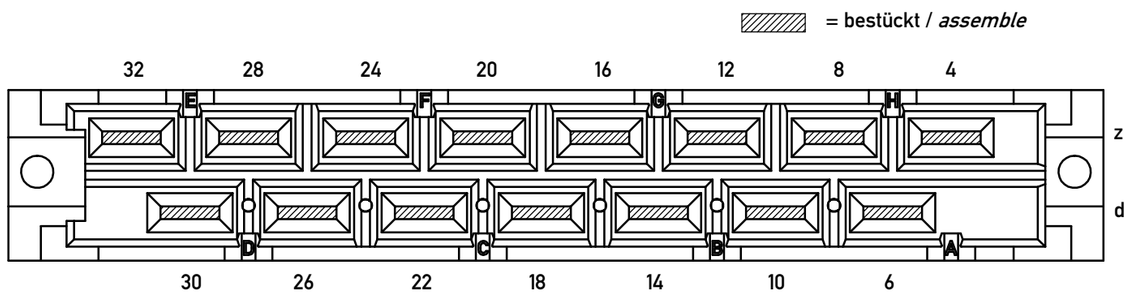

Copyright by ERNI Production GmbH & Co. KG
Proprietary notice pursuant to ISO 16016 to be observed.

Information:	Tolerances	All Dimensions in mm	Scale 2:1
All rights reserved. Only for Information. To ensure that this is the latest version of this drawing, please contact one of the ERNI companies before using.	Subject to modification without prior notice. Drawing will not be updated.		Designation **Federleiste H 15** ***Female Connector H 15***
		ERNI www.ERNI.com	**100103210071** — I — A3
e — 27.05.2016			
Index — Date			Class STVH15