# Gas Discharge Tube
## GSP***Q Serie

## Features

- Electronic stability
- Small volume, easy to placement machine operation
- Large flow capacity, impact resistant ability
- Static electricity capacity, good insulation
- Reaction speed is 50 ns - 150 ns
- Storage and operating temperature -40~125℃
- High energy discharge

## Applications

- ADSL MODEM、FAX、TELEPHONE
- RS485、RS232、CAN level of protection
- CATV
- Power supply prevents thunder common-mode protection
- Line cards

## Electrical Characteristics

| Part Number | DC Spark-over Voltage (@100V/s ) (V) | Impulse Spark-over Voltage (@1KV/μs) (V) | Discharge Current 10hits (@8/20μs) (KA) | AC Discharge Current (@50Hz) (A) | Min.Insulation Resistance (@DC) | | Max. Capacitance (@1MHz) (pF) |
|---|---|---|---|---|---|---|---|
| | | | | | (GΩ) | Test Voltage (V) | |
| GSP075Q | 75±30% | 600 | 10 | 10 | 1 | 50 | 1.0 |
| GSP090Q | 90±30% | 600 | 10 | 10 | 1 | 50 | 1.0 |
| GSP150Q | 150±20% | 650 | 10 | 10 | 1 | 100 | 1.0 |
| GSP230Q | 230±20% | 700 | 10 | 10 | 1 | 100 | 1.0 |
| GSP350Q | 350±20% | 750 | 10 | 10 | 1 | 100 | 1.0 |
| GSP470Q | 470±20% | 1000 | 10 | 10 | 1 | 100 | 1.0 |
| GSP600Q | 600±20% | 1100 | 10 | 10 | 1 | 100 | 1.0 |

## Dimensions

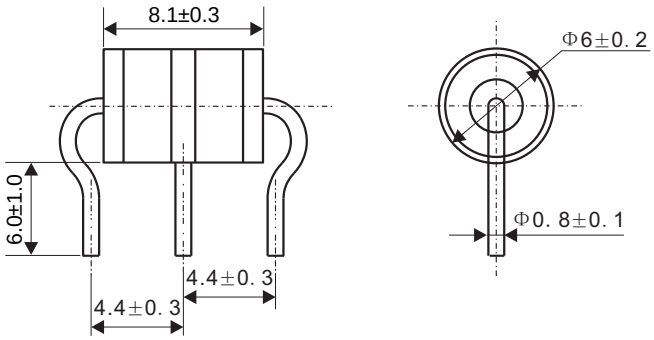


Dimensions in millimeters

## Initial Characteristics

| Test Item | Test Method | Specification |
|---|---|---|
| DC-Spark-Over Voltage Vs | Add and measure the DC Voltage gradually Maxto get the discharge threshold voltage. The measuring current is 1mA/1 second max.（1sec）.(1mA) | It depands on each spec. |
| Insulation Resistance | Measure the insulation resistance of two end of leadwire under the specified DC voltage. | 1GΩ min. |
| Capacitance C(pF) | Electrostatic Capacitance under the test condition of 1KHz,DC 6V(max). | 1.0pF max. |

## Surge Characteristics

| Test Item | Test Method | Specification |
|---|---|---|
| Surge withstand capability | In the glass tube ends in 8/20 us surge tester, applying the model that corresponds to the impact resistance current, time interval for the 60 s of plus or minus the test 5 times. Test the dc voltage, insulation resistance, static capacitance and check the appearance. | DC spark-over voltage JSE: △Vs/Vs≦30% |
| Surge life test | Apply 10KV voltage charged in 1500pF condenser and apply the current to the specimen,200 times at 10 seconds of intervals. | Within standard mentioned in Initial Characteristics. |

## Enviromental Characteristics

| Test Item | Test Method | Specification |
|---|---|---|
| Cold resistance | After -40±3℃ (1000hrs) / room temp.,normal humidity(4 hrs) cycle, measure the properties. | Within standard mentioned in Initial Characteristics. |
| Heat resistance | After 125±2℃ (1000hrs) / room temp.,normal humidity(4 hrs) cycle, measure the properties. | Within standard mentioned in Initial Characteristics. |
| Temperature resistance | After 85±2℃ RH85%(1000hrs) / room temp.,normal humidity(4 hrs) cycle, measure the properties. | Within standard mentioned in Initial Characteristics. |
| Temperature period | 25 times repetition of cycle -40±3℃ (30 Min.),roon temp., (4 Min.), 125±2℃ (30Min.), room temp., normal humidity(4hrs) . | Within standard mentioned in Initial Characteristics. |
| Tensile strength | Apply 2.5kgs load approximately 30 seconds, then check for pull-out and breaking of the lead wire. | Within standard mentioned in Initial Characteristics. |
| Bending strength | Bend the lead wire, with jig which radius is 0.75~0.8mm, at the point of 2mm from the body, under 0.25 kgs load applied at the right angle the direction of theamis and get the bent lead wire back to its original poing after the procedure was repeated 2times. | Within standard mentioned in Initial Characteristics. |
| Resistance to soldering attachment (by solder dip) | Apply flux and immerse in molten solder, up to the point of 3mm from the body,for 5 sec. (235 ℃±5 ℃). Wash the leadwire and check for soldering adhesion. | Lead wire is evenly covered by solder over 90%. |
| Resistance to soldering heat (by solder dip) | Apply flux and immerse in molten solder, up to the point of 3mm from the body,for 5 sec. (235℃±5℃). Wash the leadwire and check forsoldering adhesion.) | Within standard mentioned in Initial Characteristics. |

## Recommended wave slodering profile

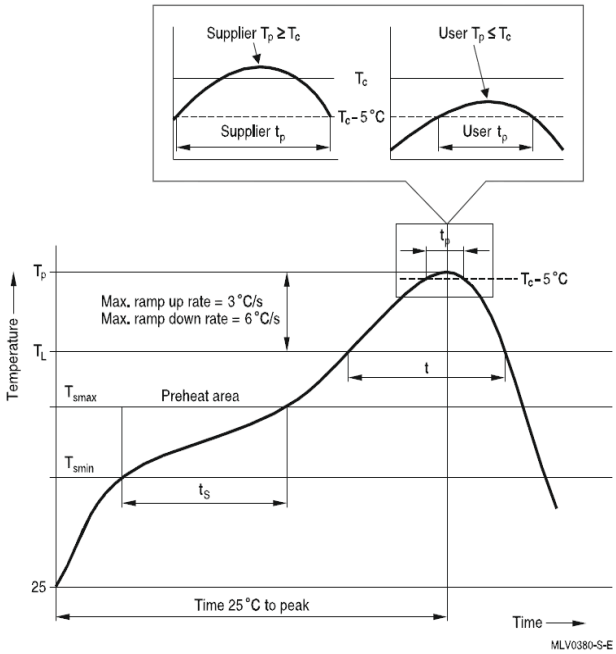


| Reflow profile features | | Sn- Pb eutectic assembly | Pb-free assembly |
|---|---|---|---|
| Preheat and soak<br>- Temperature min<br>- Temperature max<br>- Time | <br>$T_{smin}$<br>$T_{smax}$<br>$t_{smin}$ to $t_{smax}$ | <br>100 °C<br>150 °C<br>60 ... 120 s | <br>150 °C<br>200 °C<br>60 ... 180 s |
| Average ramp-up rate | $T_{smax}$ to $T_p$ | max. 3 °C/ s | max. 3 °C/ s |
| Liquidous temperature<br>Time at liquidous | $T_L$<br>$t_L$ | 183 °C<br>60 ... 150 s | 217 °C<br>60 ... 150 s |
| Peak package body temperature *, Classification temperature ** | $T_p$, $T_C$ | 220 ... 235 °C ** | 245 ... 260 °C ** |
| Time ($t_p$) ** within 5 °C of the specified classification temperature ($T_C$) | | 20 s *** | 30 s *** |
| Average ramp-down rate | $T_p$ to $T_{smax}$ | max. 6 °C/ s | max. 6 °C/ s |
| Time 25 °C to peak temperature | | max. 6 min | max. 8 min |

* = Tolerance for peak profile temperature ($T_p$) is defined as a supplier minimum and a user maximum.
** = For details please refer to JEDEC J-STD-020D.
*** = Tolerance for time at peak profile temperature ($t_p$) is defined as a supplier minimum and a user maximum.