# XDL605/XDL606 Series

ETR44002-001

## 36V Operation 600mA Inductor Built-in Step-down “micro DC/DC” Converter

☆AEC-Q100 Grade2

## ■GENERAL DESCRIPTION

The XDL605/XDL606 series is an ultra compact step-down DC / DC converter that integrates a coil and a control IC in one tiny package. By adding a ceramic capacitor for input / output and a resistor for output voltage setting to external parts, a power supply circuit of up to 600mA can be created. An internal coil simplifies the circuit and enables minimization of noise and other operational trouble due to the circuit wiring.

XDL605/XDL606 series has operating voltage range of 3.0V~36.0V and it can support 600mA as an output current with high-efficiency. They use synchronous rectification at an operating frequency of 2.2MHz. The output voltage can be set to a value from 1.8V to 5.0V using external resistors.

They have a fixed internal soft start time which is 2.0ms(TYP.), additionally the time can be extended by using an external resistor and capacitor.The output state can be monitored using the power good function.

Over current protection, short-circuit protection and thermal shutdown are embedded and they secure a safety operation.

The XDL605/XD606 series employ the wettable flank plated packaging. This provides a visual indicator of solderability and lowers the inspection time.

## ■APPLICATIONS

- Automotive Body Control
- Automotive Infortainment
- Automotive accessories
  - ・Drive recorder
  - ・Car-mounted camera
  - ・ETC
- Industrial Equipment

## ■FEATURES

| | | |
|---|---|---|
| Input Voltage Range | : | 3.0V ~ 36.0V (Absolute Max 40V) |
| Output Voltage Range | | 1.8V ~ 5.0V |
| FB Voltage | : | 0.75V ± 1.5% |
| Oscillation Frequency | : | 2.2MHz |
| Output Current | : | 600mA |
| Quiescent Current | | 13.5 μA (XDL606) |
| Control Methods | : | PWM control (XDL605)<br>PWM/PFM Auto (XDL606)<br>Efficiency 81%@12V→5V, 300mA |
| Function | : | Soft-start External settings<br>Power good |
| Protection Circuits | : | Over Current Protection (Automatic recovery)<br>Thermal Shutdown<br>UVLO |
| Output Capacitor | : | Ceramic Capacitor |
| Operating Ambient Temperature | : | -40℃ ~ +105℃ |
| Packages | : | DFN3625-11B (Wettable Flank) |
| Environmentally Friendly | : | EU RoHS Compliant, Pb Free |

## ■TYPICAL APPLICATION

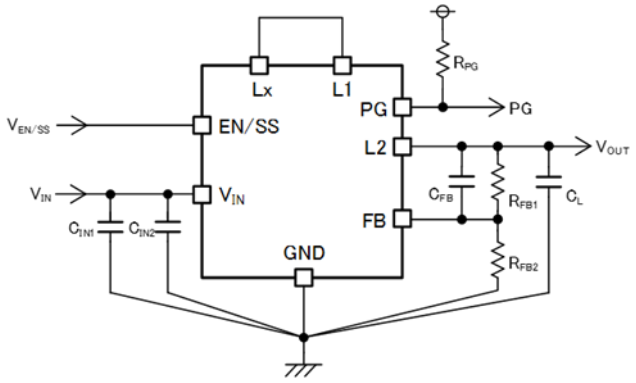


## ■ TYPICAL PERFORMANCE CHARACTERISTICS

XDL605B75D82/XD606B75D82
($V_{IN}$=12V, $V_{OUT}$=5V)

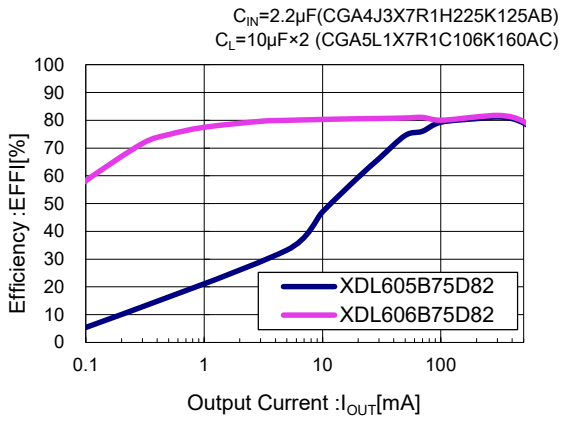

## ■BLOCK DIAGRAM

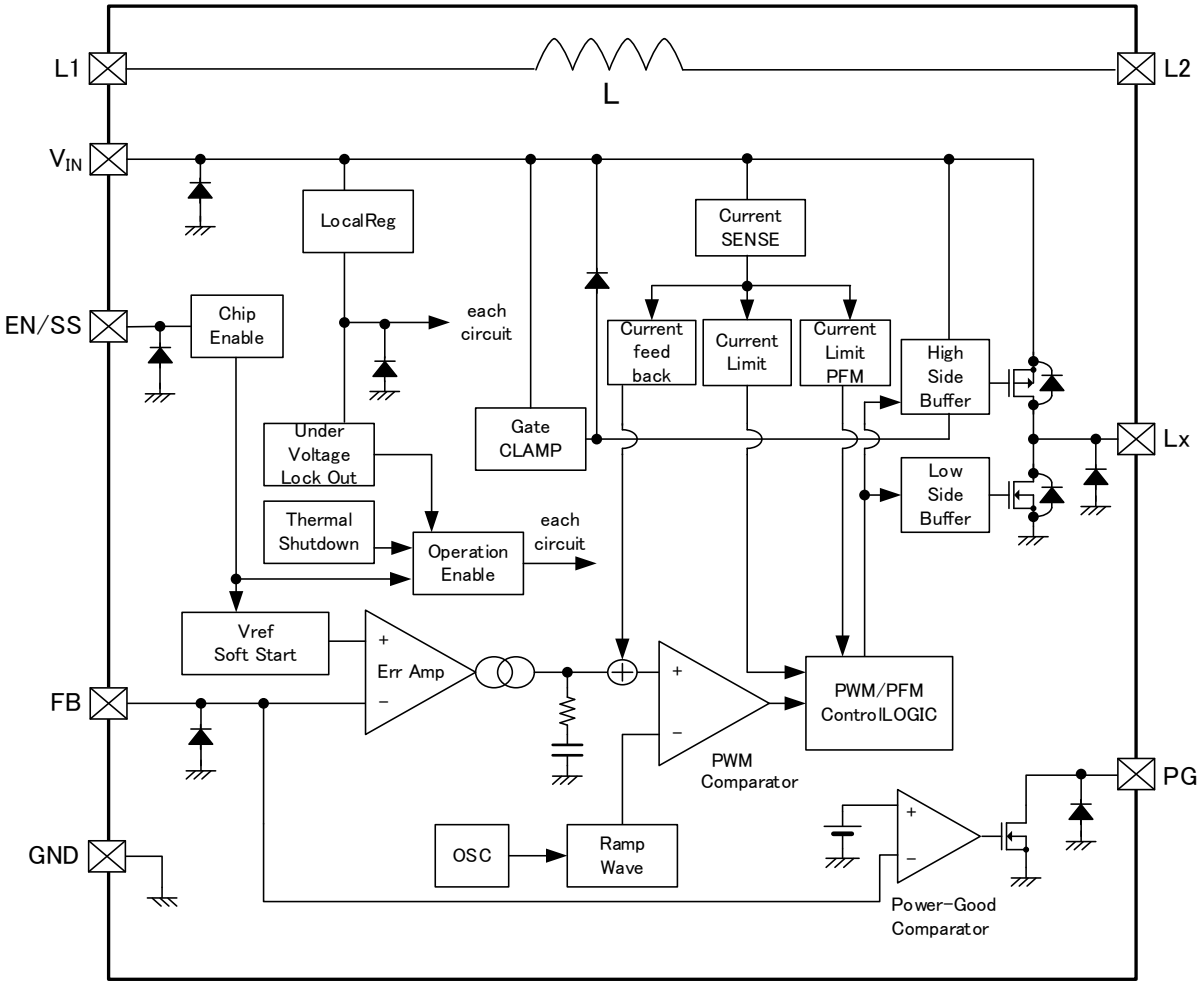


* Diodes inside the circuit are an ESD protection diodes and a parasitic diodes.

# ■PRODUCT CLASSIFICATION

●Ordering Information

XDL605①②③④⑤⑥-⑦(*1) PWM control
XDL606①②③④⑤⑥-⑦(*1) PWM/PFM Automatic Switching Control

| DESIGNATOR | ITEM | SYMBOL | DESCRIPTION |
|---|---|---|---|
| ① | Type | B | Refer to Selection Guide |
| ②③ | Adjustable Output Voltage | 75 | Output voltage can be adjusted in 1.8V to 5.0V |
| ④ | Oscillation Frequency | D | 2.2MHz |
| ⑤⑥-⑦(*1) | Packages (Order Unit) | 82-Q | DFN3625-11B (2,000pcs/Reel) (*2) |

(*1) The "-Q" suffix denotes "AEC-Q100" and "Halogen and Antimony free" as well as being fully EU RoHS compliant.
(*2) The XDL605/XDL606 reels are shipped in a moisture-proof packing.

●Selection Guide

| FUNCTION | B TYPE |
|---|---|
| Chip Enable | Yes |
| UVLO | Yes |
| Thermal Shutdown | Yes |
| Soft Start | Yes |
| Power-Good | Yes |
| Current Limiter (Automatic Recovery) | Yes |

## ■PIN CONFIGURATION

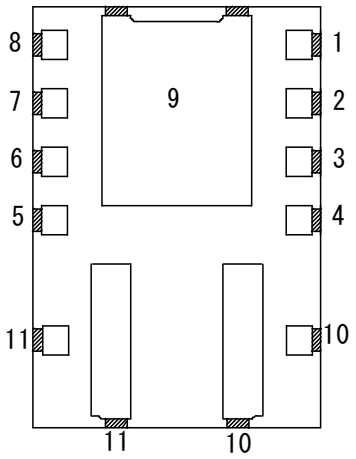


DFN3625-11B
(BOTTOM VIEW)

* The dissipation pad(No.9) pin for the DFN3625-11B package should be solder-plated in recommended mount pattern and metal masking so as to enhance mounting strength and heat release.
If the pad needs to be connected to other pins, it should be connected to the GND (No.4,5,7) pin.

## ■ PIN ASSIGNMENT

| PIN NUMBER | PIN NAME | FUNCTIONS |
|---|---|---|
| 1 | PG | Power-good Output |
| 2 | EN/SS | Enable Soft-start |
| 3 | $V_{IN}$ | Power Input |
| 4 | GND | Ground |
| 5 | GND | Ground |
| 6 | $L_X$ | Switching Output |
| 7 | GND | Ground |
| 8 | FB | Output Voltage Sense |
| 9 | GND | Ground |
| 10 | L1 | Inductor Electrodes |
| 11 | L2 | Inductor Electrodes |

## ■ FUNCTION CHART

| PIN NAME | SIGNAL | STATUS |
|---|---|---|
| EN/SS | L | Stand-by |
| | H | Active |
| | OPEN | Undefined State(*1) |

(*1) Please do not leave the EN/SS pin open. Each should have a certain voltage.

| PIN NAME | CONDITION | | SIGNAL |
|---|---|---|---|
| PG | EN/SS = H | $V_{FB} > V_{PGDET}$ | H (High impedance) |
| | | $V_{FB} \leqq V_{PGDET}$ | L (Low impedance) |
| | | Thermal Shutdown | L (Low impedance) |
| | | UVLO ($VIN < V_{UVLOD}$) | Undefined State |
| | EN/SS = L | Stand-by | L (Low impedance) |

## ■ ABSOLUTE MAXIMUM RATINGS

| PARAMETER | SYMBOL | RATINGS | UNITS |
|---|---|---|---|
| $V_{IN}$ Pin Voltage | $V_{IN}$ | -0.3 ~ 40 | V |
| EN/SS Pin Voltage | $V_{EN/SS}$ | -0.3 ~ 40 | V |
| FB Pin Voltage | $V_{FB}$ | -0.3 ~ 6.2 | V |
| PG Pin Voltage | $V_{PG}$ | -0.3 ~ 6.2 | V |
| PG Pin Current | $I_{PG}$ | 8 | mA |
| Lx Pin Voltage | $V_{Lx}$ | -0.3 ~ $V_{IN}$ + 0.3 or 40 (*1) | V |
| Power Dissipation (Ta=25℃) | Pd | 2100 (JESD51-7 board) (*2) | mW |
| Surge Voltage | $V_{SURGE}$ | 46 (*3) | V |
| Operating Ambient Temperature | Topr | -40 ~ 105 | ℃ |
| Storage Temperature | Tstg | -55 ~ 125 | ℃ |

All voltages are described based on the GND pin.

(*1) The maximum value should be either $V_{IN}$+0.3V or 40V in the lowest.

(*2) The power dissipation figure shown is PCB mounted and is for reference only.
The mounting condition is please refer to PACKAGING INFORMATION

(*3) Applied Time≦400ms

## ■ELECTRICAL CHARACTERISTICS

XDL605/XDL606 Series Ta=25℃

| PARAMETER | SYMBOL | CONDITIONS | | MIN. | TYP. | MAX. | UNIT | CIRCUIT |
|---|---|---|---|---|---|---|---|---|
| FB Voltage | $V_{FB}$ | $V_{FB}$=0.731V→0.769V<br>$V_{FB}$ Voltage when Lx pin voltage changes from "H" level to "L" level | | 0.739 | 0.750 | 0.761 | V | ② |
| | | | -40℃≦Ta≦105℃ | 0.731 | - | 0.769 | | |
| Output Voltage Setting Range(*1) | $V_{OUTSET}$ | - | -40℃≦Ta≦105℃ | 1.8 | - | 5.0 | V | − |
| Operating Input Voltage Range | $V_{IN}$ | - | -40℃≦Ta≦105℃ | 3.0 | - | 36.0 | V | − |
| UVLO Detect Voltage | $V_{UVLOD}$ | $V_{EN/SS}$=12V, $V_{IN}$:2.87V→2.53V<br>$V_{FB}$=0V, $V_{IN}$ Voltage which Lx pin voltage holding "H" level | | 2.60 | 2.70 | 2.80 | V | ② |
| | | | -40℃≦Ta≦105℃ | 2.53 | - | 2.87 | | |
| UVLO Release Voltage | $V_{UVLOR}$ | $V_{EN/SS}$=12V, $V_{IN}$:2.63V→2.97V<br>$V_{FB}$=0V, $V_{IN}$ Voltage which Lx pin voltage holding "L" level | | 2.70 | 2.80 | 2.90 | V | ② |
| | | | -40℃≦Ta≦105℃ | 2.63 | - | 2.97 | | |
| Quiescent Current (XDL606) | $I_q$ | $V_{FB}$=0.825V | | - | 13.5 | 22.0 | μA | ④ |
| | | | -40℃≦Ta≦105℃ | - | - | 30 | | |
| Quiescent Current (XDL605) | $I_q$ | $V_{FB}$=0.825V | | - | 290 | 500 | μA | ④ |
| | | | -40℃≦Ta≦105℃ | - | - | 550 | | |
| Stand-by Current | $I_{STB}$ | $V_{IN}$=12V, $V_{EN/SS}$=$V_{FB}$=0V | | - | 1.65 | 2.5 | μA | ⑤ |
| | | | -40℃≦Ta≦105℃ | - | - | 3.9 | | |
| Oscillation Frequency | $f_{OSC}$ | Connected to external components, $I_{OUT}$=200mA | | 2.013 | 2.200 | 2.387 | MHz | ① |
| | | | -40℃≦Ta≦105℃ | 1.936 | - | 2.464 | | |
| Minimum On Time | $t_{ONMIN}$ | Connected to external components | | - | 85 (*1) | - | ns | ① |
| Minimum Duty Cycle | $D_{MIN}$ | $V_{FB}$=0.825V | -40℃≦Ta≦105℃ | - | - | 0 | % | ② |
| Maximum Duty Cycle | $D_{MAX}$ | $V_{FB}$=0.675V | -40℃≦Ta≦105℃ | 100 | - | - | % | ② |
| Lx SW "H" On Resistance | $R_{LxH}$ | $V_{FB}$=0.675V, $I_{LX}$=200mA | | - | 1.20 | 1.38 | Ω | ② |
| Lx SW "L" On Resistance | $R_{LxL}$ | $V_{FB}$=0.825V, $I_{LX}$=200mA | | - | 0.60 (*1) | - | Ω | ② |
| PFM Switch Current (XDL606 only) | $I_{PFM}$ | Connected to external components, $V_{IN}$=$V_{EN/SS}$=12V, $I_{OUT}$=1mA | | - | 400 | - | mA | ① |
| High side Current Limit (*2) | $I_{LIMH}$ | $V_{FB}$=$V_{FBE}$×0.98 | | 1.0 | 1.3 | - | A | ② |
| Inductance | L | Test Freq.=1MHz | | - | 2.2 | - | μH | − |
| Inductor Rated Current | $I_{DC}$ | ΔT=+40deg | | - | 1.6 | - | A | − |

Test Condition: Unless otherwise stated: $V_{IN}$=12V, $V_{EN/SS}$=12V, PG=OPEN

Peripheral parts connection conditions：$R_{FB1}$=680kΩ,$R_{FB2}$=120kΩ,$C_{FB}$=47pF,$C_L$=10μF×2parallel, $C_{IN}$=4.7μF

(*1) Design reference value. This parameter is provided only for reference.

(*2) Current limit denotes the level of detection at peak of coil current.

# ■ELECTRICAL CHARACTERISTICS

XDL605/XDL606 Series Ta=25℃

| PARAMETER | SYMBOL | CONDITIONS | | MIN. | TYP. | MAX. | UNIT | CIRCUIT |
|---|---|---|---|---|---|---|---|---|
| Internal Soft-Start Time | $t_{SS1}$ | $V_{FB}$=0.675V | | 1.0 | 2.0 | 4.0 | ms | ② |
| External Soft-Start Time | $t_{SS2}$ | $V_{FB}$=0.675V<br>$R_{SS}$=430KΩ, $C_{SS}$=0.47μF | | 21 | 26 | 33 | ms | ③ |
| PG Detect Voltage | $V_{PGDET}$ | $V_{FB}$=0.72V→0.63V<br>$R_{PG}$:100kΩ pull-up to 5V,<br>$V_{FB}$ Voltage when PG pin voltage changes from "H" level to "L" level | | 0.638 | 0.675 | 0.712 | V | ② |
| | | | -40℃≦Ta≦105℃ | 0.630 | - | 0.720 | | |
| PG Output Voltage | $V_{PG}$ | $V_{FB}$=0.6V, $I_{PG}$=1mA | -40℃≦Ta≦105℃ | - | - | 0.3 | V | ② |
| Efficiency | EFFI | Connected to external components,<br>$V_{IN}$=12V, $V_{OUT}$=5V, $I_{OUT}$=300mA | | - | 81 | - | % | ① |
| FB "'H" Current | $I_{FBH}$ | $V_{IN}$=$V_{EN/SS}$=36V, $V_{FB}$=3.0V | -40℃≦Ta≦105℃ | -0.1 | 0.0 | 0.1 | μA | ④ |
| FB "L" Current | $I_{FBL}$ | $V_{IN}$=$V_{EN/SS}$=36V, $V_{FB}$=0V | -40℃≦Ta≦105℃ | -0.1 | 0.0 | 0.1 | μA | ④ |
| EN/SS "H" Voltage | $V_{EN/SSH}$ | $V_{EN/SS}$=0.3V→2.5V<br>$V_{FB}$=0.71V, $V_{EN/SS}$ Voltage when Lx pin voltage changes from "L" level to "H" | -40℃≦Ta≦105℃ | 2.5 | - | 36.0 | V | ② |
| EN/SS "L" Voltage | $V_{EN/SSL}$ | $V_{EN/SS}$=2.5V→0.3V<br>$V_{FB}$=0.71V, $V_{EN/SS}$ Voltage when Lx pin voltage changes from "H" level to "L" | -40℃≦Ta≦105℃ | GND | - | 0.3 | V | ② |
| EN/SS 'H' Current | $I_{EN/SSH}$ | $V_{IN}$=$V_{EN/SS}$=36V, $V_{FB}$=0.825V | -40℃≦Ta≦105℃ | - | 0.1 | 0.3 | μA | ④ |
| EN/SS 'L' Current | $I_{EN/SSL}$ | $V_{IN}$=36V, $V_{EN/SS}$=0V, $V_{FB}$=0.825V | -40℃≦Ta≦105℃ | -0.1 | 0.0 | 0.1 | μA | ④ |
| Thermal Shutdown Temperature | $T_{TSD}$ | Junction Temperature | | - | 150 | - | ℃ | − |
| Hysteresis Width | $T_{HYS}$ | Junction Temperature | | - | 25 | - | ℃ | − |

Test Condition: Unless otherwise stated: $V_{IN}$=12V、$V_{EN/SS}$=12V、PG=OPEN

Peripheral parts connection conditions:
Peripheral parts connection conditions：$R_{FB1}$=680kΩ, $R_{FB2}$=120kΩ, $C_{FB}$=47pF, $C_L$=10μF×2parallel, $C_{IN}$=4.7μF

## ■TEST CIRCUITS

CIRCUIT①

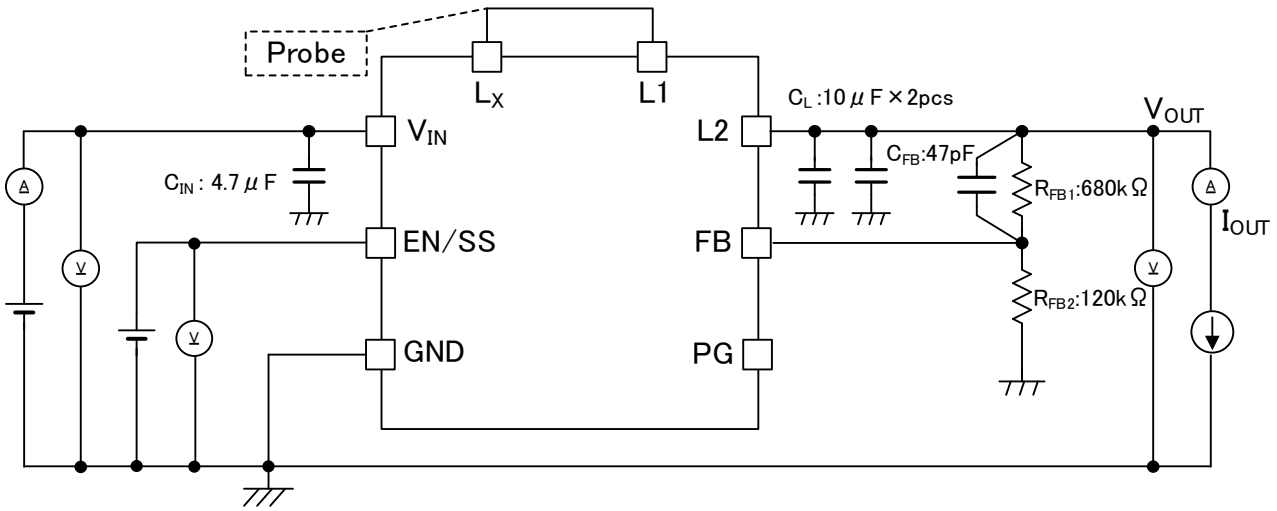


CIRCUIT②

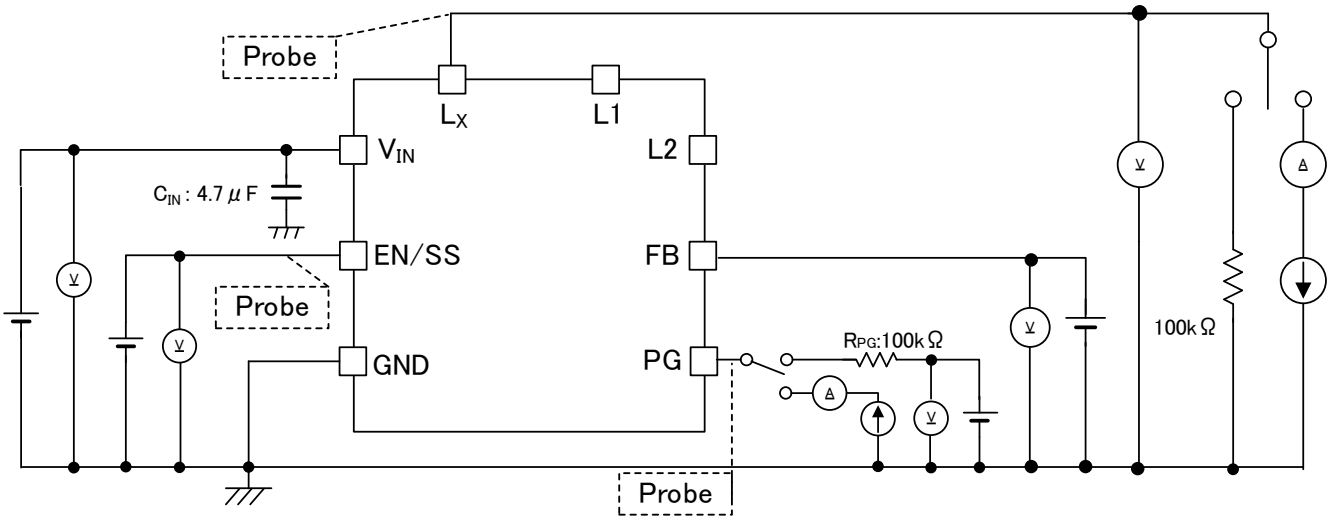


CIRCUIT③

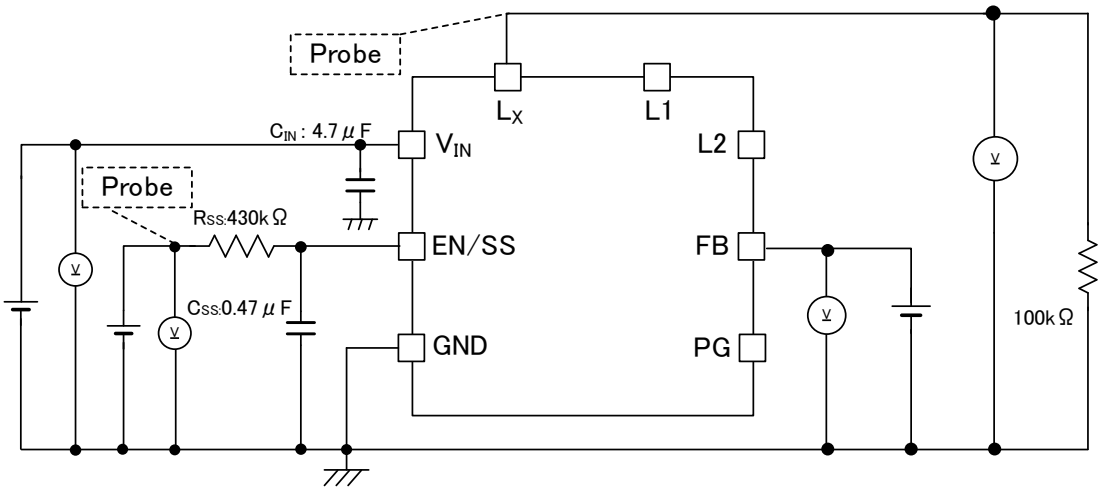

## ■TEST CIRCUITS (Continued)

CIRCUIT④

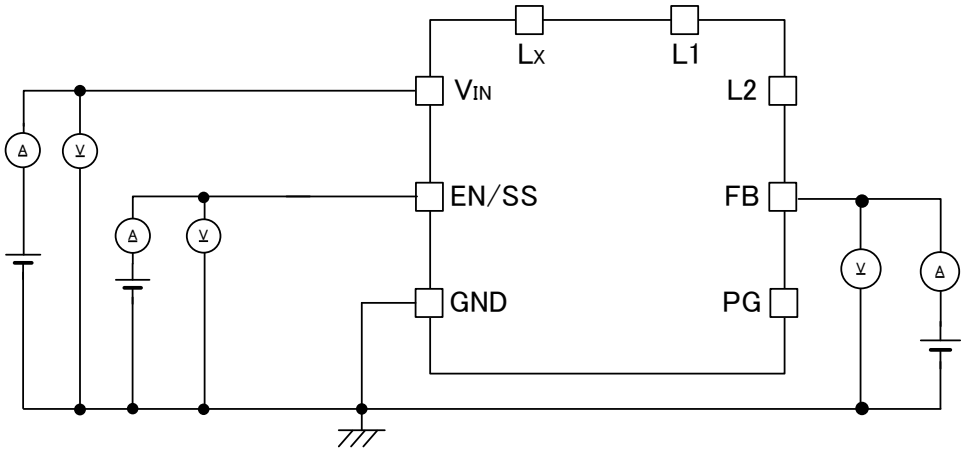


CIRCUIT⑤

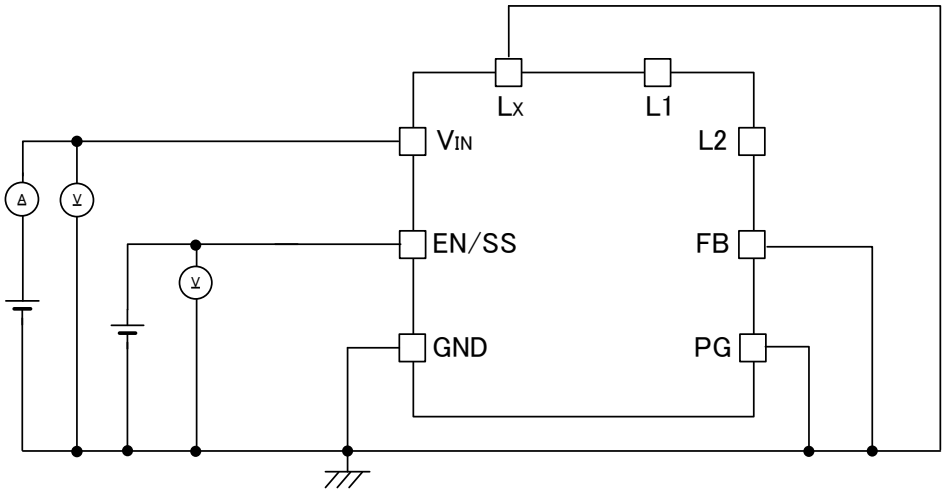

## ■TYPICAL APPLICATION CIRCUIT / Parts Selection Method

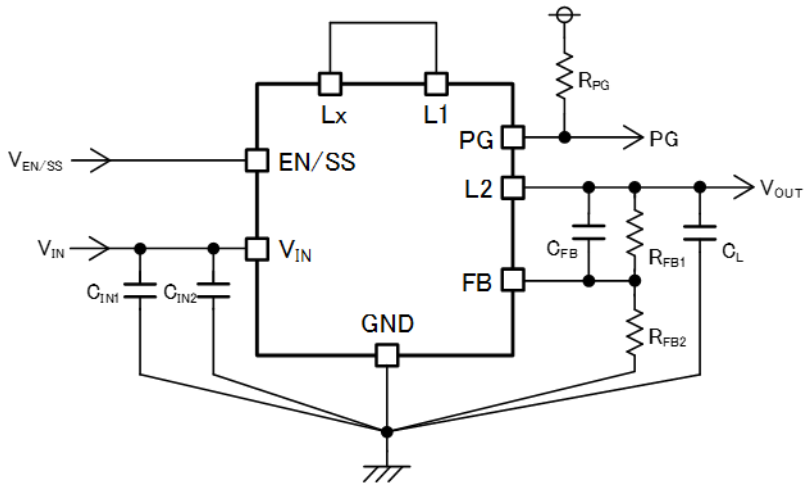


* The inductor is dedicated to this product. Please do not use it for purposes other than this product.

【Typical Examples】

| | conditions | MANUFACTURER | PRODUCT NUMBER | VALUE |
|---|---|---|---|---|
| $C_{IN1}$(*1) | $V_{IN}$＜20V | TDK | CGA6P3X7R1H475K250AB | 4.7uF/50V |
| | $V_{IN}$≧20V | | | 4.7uF/50V 2parallel |
| $C_{IN2}$ | - | TDK | CGA3E2X7R1H104K080AA | 0.1uF/50V |
| $C_L$(*2) | - | Murata | GRT21BR71A106KE13 | 10μF/10V 2parallel |
| | | Murata | GRM21BZ71C106KE15 | 10μF/16V 2parallel |
| | | TDK | CGA5L1X7R1C106K160AC | 10μF/16V 2parallel |

Select parts considering the DC bias characteristics and rated voltage of ceramic capacitors.

(*1) For $C_{IN1}$, use a capacitor with the same or higher effective capacity value as the recommended components.

(*2) For $C_L$, use a capacitor with the same or higher effective capacity value as the recommended components.
If a capacitor with a low effective capacity value is used, the output voltage may become unstable.
However, if large capacity capacitors, such as electrolytic capacitors, are connected in parallel, the inrush current during startup could increase or the output could become unstable.

# ■TYPICAL APPLICATION CIRCUIT / Parts Selection Method (Continued)

< Output Voltage Setting Value $V_{OUTSET}$ Setting >
The output voltage can be set by adding an external dividing resistor.
The output voltage is determined by the equation below based on the values of $R_{FB1}$ and $R_{FB2}$.

$$V_{OUT}=V_{FB} \times (R_{FB1}+R_{FB2}) / R_{FB2}$$

With $R_{FB2} \leqq 200k\Omega$ and $R_{FB1} + R_{FB2} \leqq 1M\Omega$

Under the condition that the difference between VIN and VOUT is big, the ripple voltage can be big due to the unstable duty. When the ripple voltage needs to be reduced, please be sure to use this product within the Operation Area stated in the Electric Characteristics Example of "VIN-VOUT Operation Area".

<$C_{FB}$ setting>
Adjust the value of the phase compensation speed-up capacitor $C_{FB}$ using the equation below.

$$C_{FB} = \frac{1}{2\pi \times fzfb \times R_{FB1}}$$

$$fzfb = \frac{1}{2\pi\sqrt{C_L \times L}}$$

【Setting Example】

| XDL605 | | | | | | |
|---|---|---|---|---|---|---|
| $V_{OUTSET}$ | $C_L$ | fzfb | $R_{FB1}$ | $R_{FB2}$ | $C_{FB}$ (Calculated) | $C_{FB}$ (E24 series) |
| 1.8V | 20 μF | 24kHz | 18kΩ | 13kΩ | 369pF | 390pF |
| 3.3V | 20 μF | 24kHz | 51kΩ | 15kΩ | 130pF | 130pF |
| 5.0V | 20 μF | 24kHz | 68kΩ | 12kΩ | 98pF | 100pF |

| XDL606 | | | | | | |
|---|---|---|---|---|---|---|
| $V_{OUTSET}$ | $C_L$ | fzfb | $R_{FB1}$ | $R_{FB2}$ | $C_{FB}$ (Calculated) | $C_{FB}$ (E24 series) |
| 1.8V | 20 μF | 24kHz | 180kΩ | 130kΩ | 36.9pF | 39pF |
| 3.3V | 20 μF | 24kHz | 510kΩ | 150kΩ | 13.0pF | 13pF |
| 5.0V | 20 μF | 24kHz | 680kΩ | 120kΩ | 9.8pF | 10pF |

## ■OPERATIONAL EXPLANATION

The XDL605/XDL606 series consists internally of a reference voltage supply with soft-start function, a ramp wave circuit, an error amp, a PWM comparator, a High side driver FET, a Low side driver FET, a High side buffer circuit, a Low side buffer circuit, a current sense circuit, a phase compensation (Current feedback) circuit, a current limiting circuit, an under voltage lockout (UVLO) circuit, an internal power supply (Local Reg) circuit, a gate clamp (CLAMP) circuit and other elements.

The control method is the current mode control method for handling low ESR ceramic capacitors.

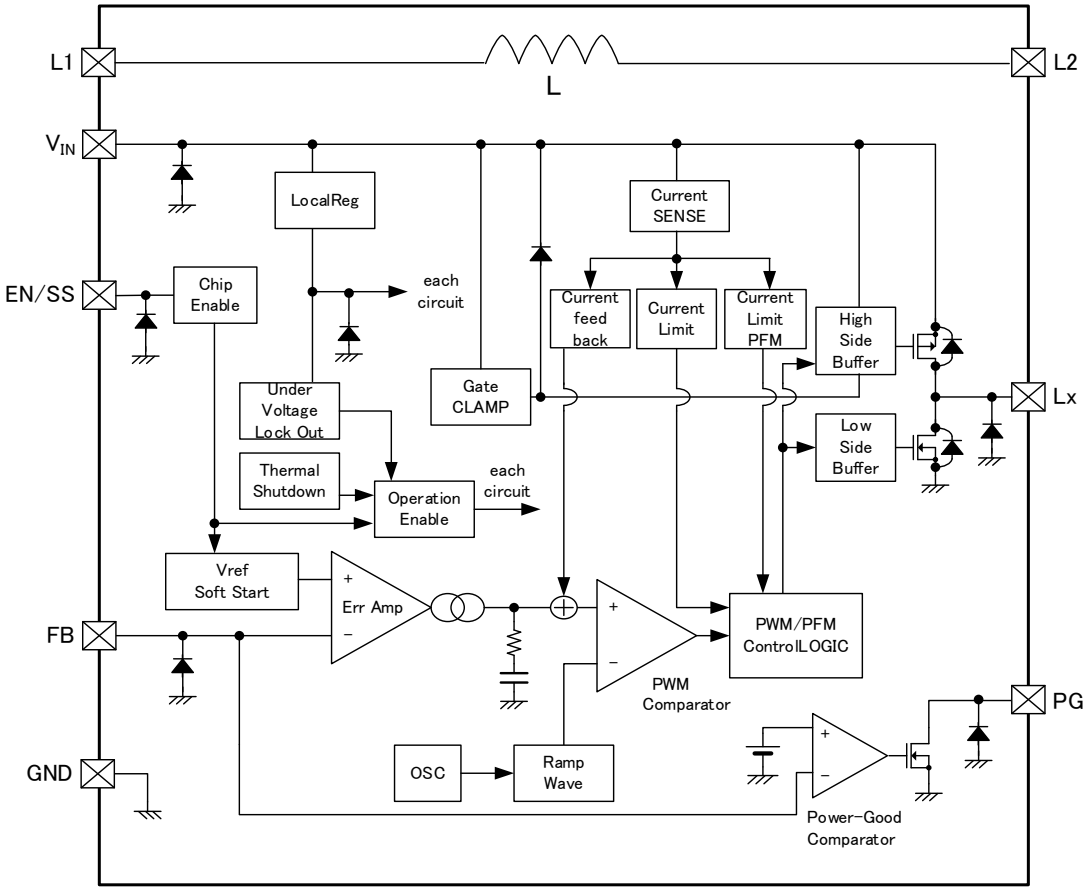


* Diodes inside the circuits are ESD protection diodes and parasitic diodes.

# ■OPERATIONAL EXPLANATION(Continued)

< Normal Operation >

The standard voltage Vref and FB pin voltage are compared using an error amplifier and then the control signal to which phase compensation has been added to the error amplifier output is input to the PWM comparator. The PWM comparator compares the above control signal and lamp wave to control the duty width during PWM control. Continuously conducting these controls stabilizes the output voltage.

In addition, the current detecting circuit monitors the driver FET current for each switching and modulates the error amplifier output signal into a multiple feedback signal (current feedback circuit). This achieves stable feedback control even when low ESR capacitors, such as ceramic capacitors, are used to stabilize the output voltage.

XDL605 Series

The XDL605 Series (PWM control) performs switching at a set switching frequency $f_{OSC}$ regardless of the output current. At light loads the on time is short and the circuit operates in discontinuous mode, and as the output current increases, the on time becomes longer and the circuit operates in continuous mode.

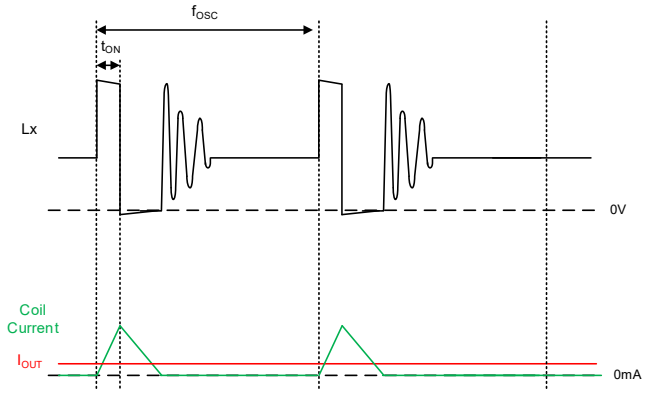


XDL605 series: Example of light load operation

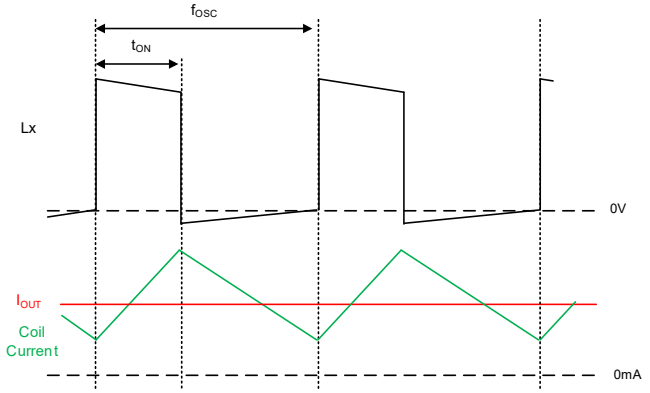


XDL605 series: Example of heavy load operation

XDL606 Series

The XDL606 Series (PWM/PFM automatic switching control) lowers the switching frequency during light loads by turning on the High side driver FET when the coil current reaches the PFM current ($I_{PFM}$). This operation reduces the loss during light loads and achieves high efficiency from light to heavy loads. As the output current increases, the switching frequency increases proportional to the output current, and when the switching frequency increases $f_{OSC}$, the circuit switches from PFM control to PWM control and the switching frequency becomes fixed.

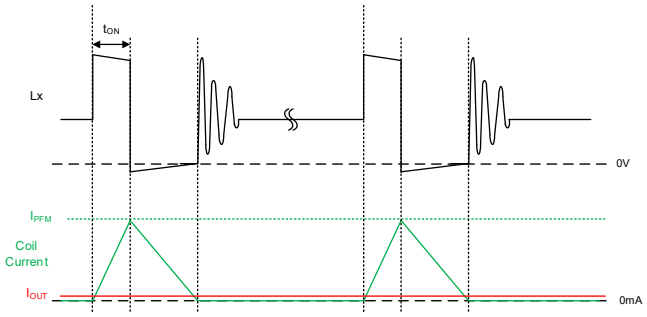


XDL606 series: Example of light load operation

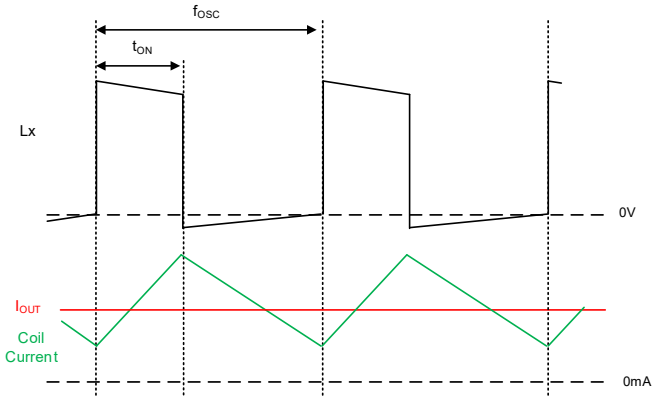


XDL606 series: Example of heavy load operation

< 100% Duty Cycle Mode >

When the dropout voltage is low or there is a transient response, the circuit might change to the 100% Duty cycle mode where the High side driver FET is continuously on.

The 100% Duty cycle mode operation makes it possible to maintain the output current even when the dropout voltage is low such as when the input voltage declines due to cranking, etc.

## ■OPERATIONAL EXPLANATION(Continued)

< CE Function >

When an "H" voltage ($V_{EN/SSH}$) is input to the EN/SS pin, normal operation is performed after the output voltage is started up by the soft start function, normal operation is performed. When the "L" voltage ($V_{EN/SSL}$) is input to the EN/SS pin, the circuit enters the standby state, the supply current is suppressed to the standby current $I_{STB}$ (TYP. 1.65μA), and the High side driver FET and Low side driver FET are turned off.

< Soft Start Function >

This function gradually starts up the output voltage to suppress the inrush current.

The soft start time is the time until the output voltage from $V_{EN/SSH}$ reaches 90% of the output voltage set value, and when the output voltage increases further, the soft start function is cancelled to switch to normal operation.

Internal Soft Start Time

The internal soft start time ($t_{SS1}$) is configured so that after the "H" voltage ($V_{EN/SSH}$) is input to the EN/SS pin, the standard voltage connected to the error amplifier increases linearly during the soft-start period. This causes the output voltage to increase proportionally to the standard voltage increase. This operation suppresses the inrush current and smoothly increases the output voltage.

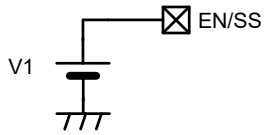


< Internal soft start EN/SS circuit >

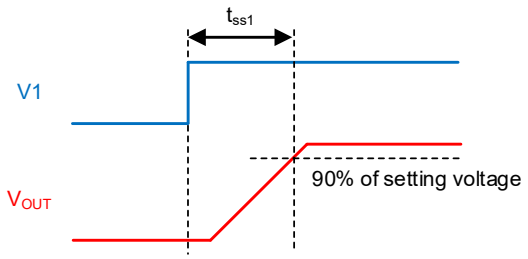


< Overview of internal soft start >

External Setting Soft Start Time

The external setting soft start time ($t_{SS2}$) can adjust the increase speed of the standard voltage in the IC by adjusting the EN/SS pin voltage inclination during startup using externally connected component $R_{SS}$ and $C_{SS}$. This makes it possible to externally adjust the soft start time.

Soft start time ($t_{SS2}$) is approximated by the equation below according to values of V1, $R_{SS}$, and $C_{SS}$
When $t_{ss2}$ is shorter than $t_{ss1}$, the output voltage rises at the internal soft start time.

$$t_{ss2}=C_{ss}\times R_{ss}\times \ln ( V1 / (V1-1.45V) )$$

【Setting Example】

$C_{SS}$ = 0.47μF, $R_{SS}$ = 430kΩ, V1 = 12V

$t_{SS2}$ = 0.47μF x 430kΩ x ( ln (12V/(12V-1.45V)) = 26ms

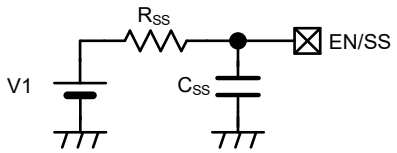


< External soft start EN/SS circuit >

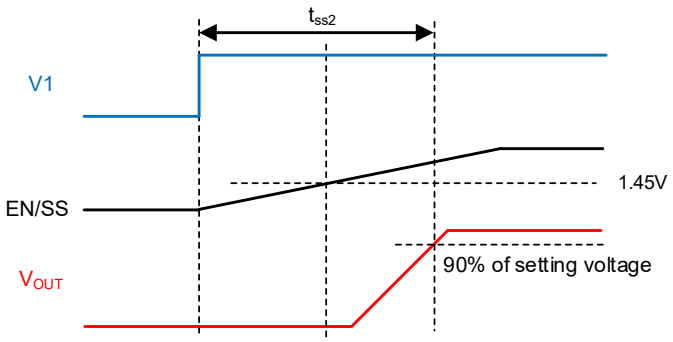


< Overview of external soft start >

## ■OPERATIONAL EXPLANATION (Continued)

< Power Good >

The output state can be monitored using the power good function. The PG pin is an Nch open drain output, therefore a pull-up resistor (approx. 100kΩ) must be connected to the PG pin.

The pull-up voltage should be 5.5V or less. When not using the power good function, connect the PG terminal to GND or leave it open.

| CONDITION | | SIGNAL |
|---|---|---|
| EN/SS = H | $V_{FB} > V_{PGDET}$ | H (High impedance) |
| | $V_{FB} \leqq V_{PGDET}$ | L (Low impedance) |
| | Thermal Shutdown | L (Low impedance) |
| | UVLO ($V_{IN} < V_{UVLOD}$) | Undefined State |
| EN/SS = L | Stand-by | L (Low impedance) |

< UVLO Function >

When the $V_{IN}$ pin voltage falls below $V_{UVLOD}$ (TYP. 2.7V), the high side driver FET and low side driver FET are forcibly turned off to prevent false pulse output due to instable operation of the internal circuits. When the $V_{IN}$ pin voltage rises above $V_{UVLOR}$ (TYP. 2.8V), the UVLO function is released, the soft start function activates, and output start operation begins. Stopping by UVLO is not shutdown; only pulse output is stopped and the internal circuits continue to operate.

< Thermal Shutdown Function >

A thermal shutdown (TSD) function is built in for protection from overheating. When the junction temperature reaches the thermal shutdown detection temperature $T_{TSD}$, the High side driver FET and Low side driver FET are compulsorily turned off.

If the driver FET continues in the off state, the junction temperature declines, and when the junction temperature falls to the thermal shutdown cancel temperature, the thermal shutdown function is cancelled and the soft-start function operates to start up the output voltage.

## ■OPERATIONAL EXPLANATION (Continued)

< Current Limit Function >

The current limiting circuit of the XDL605/XDL606 series monitors the current that flows through the High side driver FET and Low side driver FET, and when over current is detected, the current limiting function activates.

① High side driver FET current limiting

The current in the High side driver FET is detected to equivalently monitor the peak value of the coil current. The High side driver FET current limiting function forcibly turns off the High side driver FET when the peak value of the coil current reaches the High side driver current limit value $I_{LIMH}$.

High side driver FET current limit value $I_{LIMH}$=1.3A (TYP.)

② Low side driver FET current limiting

The current in the Low side driver FET is detected to equivalently monitor the bottom value of the coil current. The Low side driver FET current limiting function operates when the High side driver FET current limiting value reaches $I_{LIMH}$. The Low side driver FET current limiting function prohibits the High side driver FET from turning on in an over current state where the bottom value of the coil current is higher than the Low side driver FET current limit value $I_{LIML}$.

Low side driver FET current limit value $I_{LIML}$=0.9A (TYP.)

When the output current increases and reaches the current limit value, the current foldback circuit operates and lowers the output voltage and FB voltage. The $I_{LIMH}$ and $I_{LIML}$ decline accompanying the FB voltage decrease to restrict the output current.

When the overcurrent state is removed, the foldback circuit operation increases the $I_{LIMH}$ and $I_{LIML}$ together with output voltage to return the output to the output voltage set value.

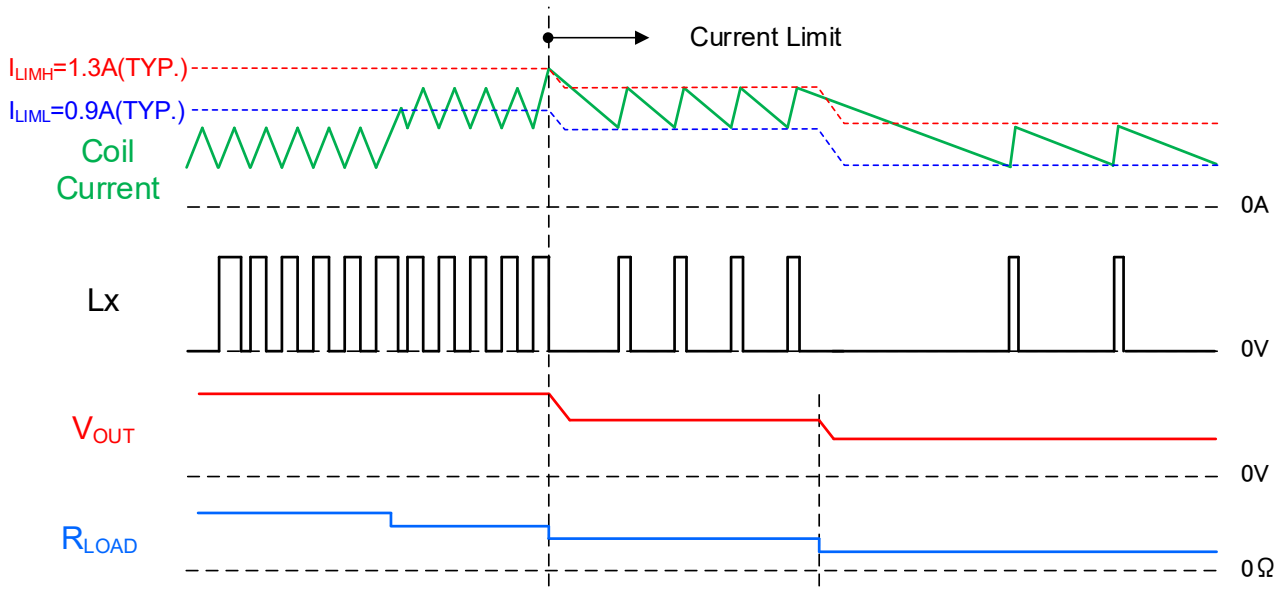

## ■NOTES ON USE

1) In the case of a temporary and transient voltage drop or voltage rise.
If the absolute maximum ratings are exceeded, the IC may be deteriorate or destroyed.

If a voltage exceeding the absolute maximum voltage is applied to the IC due to chattering caused by a mechanical switch or an external surge voltage, please use a protection element such as a TVS and a protection circuit as a countermeasure. Please see the countermeasures from (a) to (d) shown below.

(a) When voltage exceeding the absolute maximum ratings comes into the VIN pin due to the transient change on the power line, there is a possibility that the IC breaks down in the end.
To prevent such a failure, please add a TVS between $V_{IN}$ and GND as a countermeasure

(b) When the input voltage decreases below the output voltage, there is a possibility that an overcurrent will flow in the IC's Internal parasitic diode and exceed the absolute maximum rating of the Lx pin.
If the current is pulled into the input side by the low impedance between $V_{IN}$ -GND, then countermeasures, such as adding an SBD between $V_{OUT}$-$V_{IN}$, should be taken.

(c) When a negative voltage is applied to the input voltage by a reverse connection or chattering, an overcurrent could flow in the IC's parasitic diode and damage the IC. Take countermeasures, such as adding a reverse touching protection diode

(d) When a sudden surge of electrical current travels along the $V_{OUT}$ pin and GND due to a short-circuit, electrical resonance of a circuit involving parasitic inductor of cable related to short circuit and an output capacitor ($C_L$) and impedance such as $V_{OUT}$ line generates a negative voltage exceeding the breakdown voltage and may damage the device.
Take countermeasures, such as connecting a schottky diode between the $V_{OUT}$ and GND.

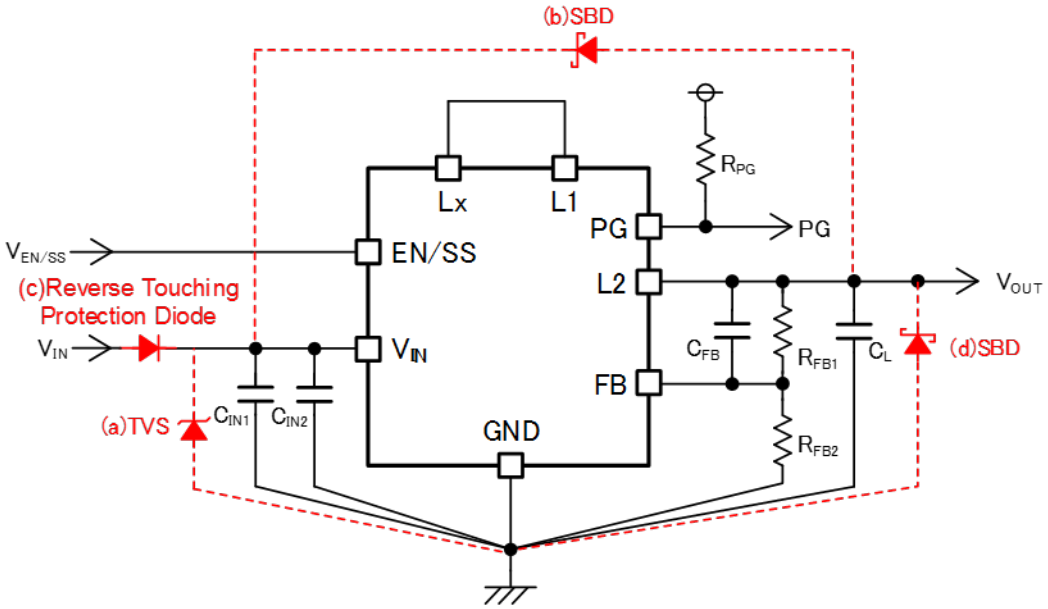

## ■NOTES ON USE(Continued)

2) Make sure that the absolute maximum ratings of the external components and of this IC are not exceeded.

3) The DC/DC converter characteristics depend greatly on the externally connected components as well as on the characteristics of this IC, so refer to the specifications and standard circuit examples of each component when carefully considering which components to select.
Be especially careful of the capacitor characteristics and use X7R or X5R (EIA standard) ceramic capacitors.
The capacitance decrease caused by the bias voltage may become large depending on the external size of the capacitor.

4) The current limit value is the coil current peak value when switching is not conducted.
The coil current peak value when the actual current limit function begins to operate may exceed the current limit of the electrical characteristics due to the effect of the propagation delay inside the circuit.

5) When the On time is less than the Min On Time ($t_{ONMIN}$) and the dropout voltage is large or the load is low, the PWM control operates intermittently and the ripple voltage may become large or the output voltage may become unstable.

6) The ripple voltage could be increased when switching from discontinuous conduction mode to continuous conduction mode and when switching to 100% Duty cycle.

7) The PWM/PFM auto series may cause superimposed ripple voltage by continuous pulses if used in high temperature and no load conditions. It is necessary to set an idle current of higher than 100μA from $V_{OUT}$ if used at no load.
It can have the same effect as when $R_{FB2}$ is lower than 7.5kΩ. Please refer to the
< Output Voltage Setting Value $V_{OUTSET}$ Setting > section under TYPICAL APPLICATION CIRCUIT.

8) If the voltage at the EN/SS Pin does not start from 0V but is at the midpoint potential when the power is switched on, the soft start function may not work properly and it may cause larger inrush current and bigger ripple voltages.

9) Torex places an importance on improving our products and their reliability. We request that users incorporate fail safe designs and post aging protection treatment when using Torex products in their systems.

## ■NOTES ON USE(Continued)

10) Instructions of pattern layouts
The operation may become unstable due to noise and/or phase lag from the output current when the wire impedance is high, please place the input capacitor($C_{IN1}$,$C_{IN2}$) and the output capacitor ($C_L$) as close to the IC as possible.

(1) In order to stabilize $V_{IN}$ voltage level, we recommend that a by-pass capacitor ($C_{IN}$) be connected as close as possible to the $V_{IN}$ and GND pins.

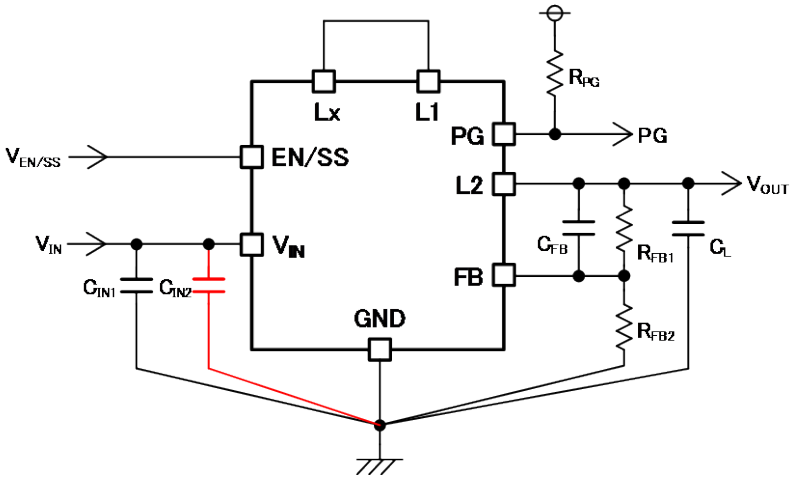


(2) Please mount each external component as close to the IC as possible.
Please place the external parts on the same side of the PCB as the IC, not on the reverse side of the PCB and elsewhere.

(3) Wire external components as close to the IC as possible and use thick, short connecting traces to reduce the circuit impedance.

(4) Make sure that the GND traces are as thick as possible, as variations in ground potential caused by high ground currents at the time of switching may result in instability of the IC.

(5) This product has a built in driver FET and inductor, which causes heat generation from the on resistance, so take measures to dissipate the heat when necessary.

●Recommended Pattern Layout

Layer 1

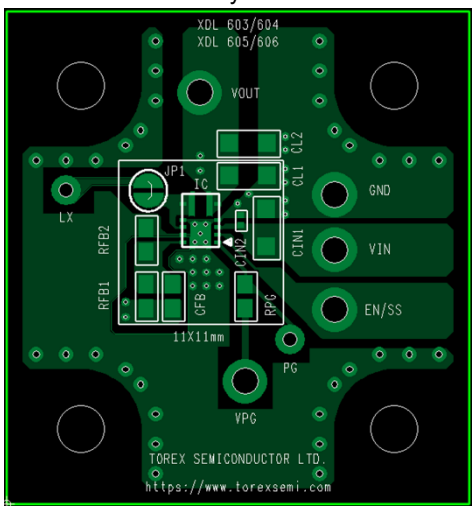


Layer 2

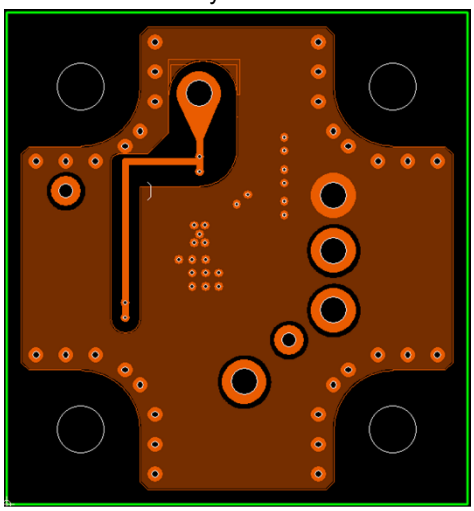

## ■TYPICAL PERFORMANCE CHARACTERISTICS

(1) Efficiency vs. Output current

XDL605/XDL606
($V_{IN}$=12V, $V_{OUT}$=3.3V)

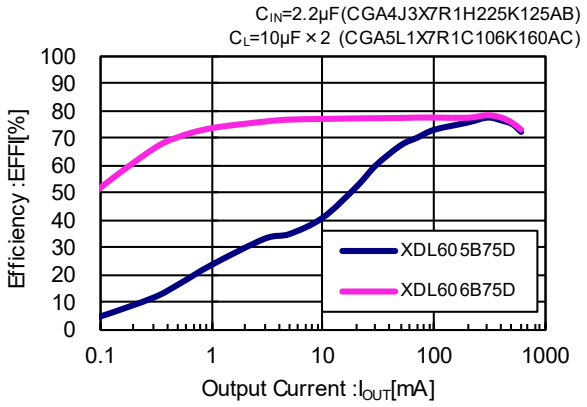


XDL605/XDL606
($V_{IN}$=12V, $V_{OUT}$=5V)

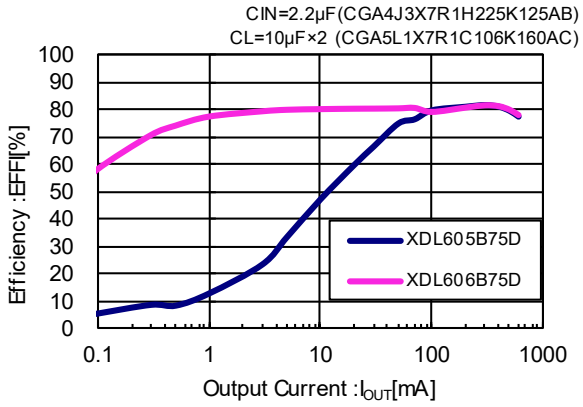


(2) Output Voltage vs. Output Current

XDL605/XDL606
($V_{IN}$=12V, $V_{OUT}$=3.3V)

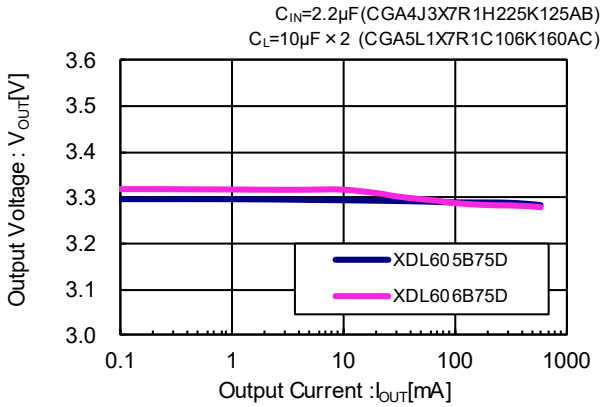


XDL605/XDL606
($V_{IN}$=12V, $V_{OUT}$=5V)

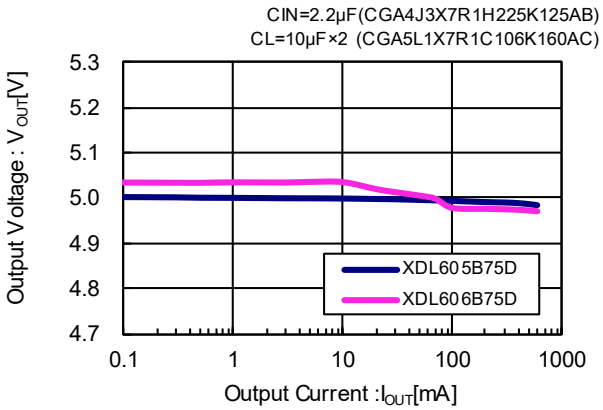


(3) Ripple Voltage vs. Output Current

XDL605/XDL606
($V_{IN}$=12V, $V_{OUT}$=5V)

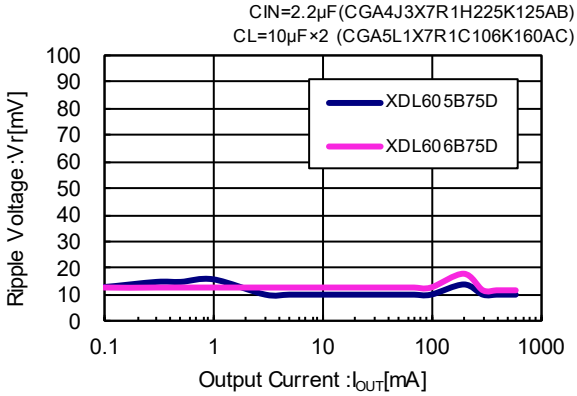


(4) FB Voltage vs. Ambient Temperature

XDL605/XDL606

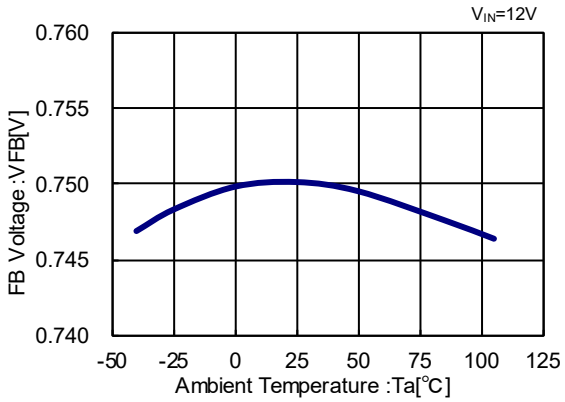

## ■TYPICAL PERFORMANCE CHARACTERISTICS (Continued)

(5) UVLO Voltage vs. Ambient Temperature

XDL605/XDL606

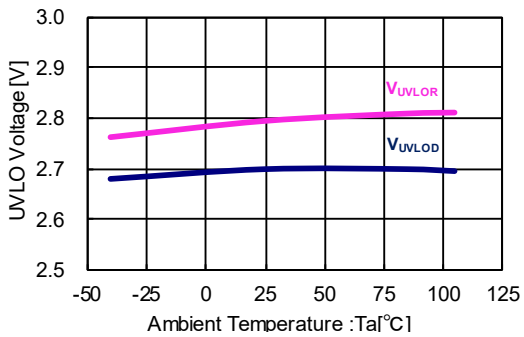


(6) Oscillation Frequency vs. Ambient Temperature

XDL605/XDL606

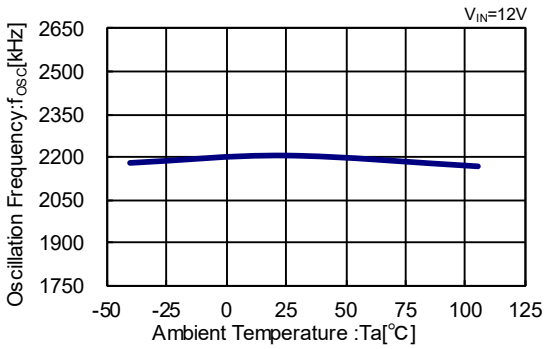


(7) Stand-by Current vs. Ambient Temperature

XDL605/XDL606

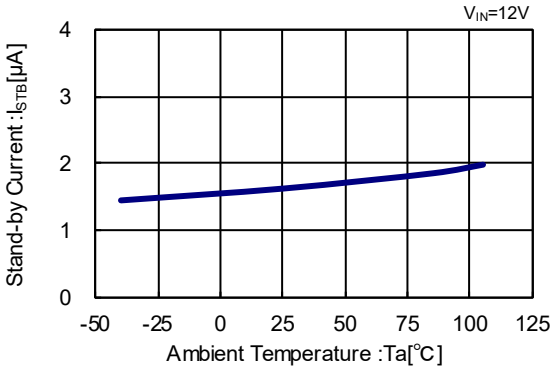


(8) Lx SW ON Resistance vs. Ambient Temperature

XDL605/XDL606

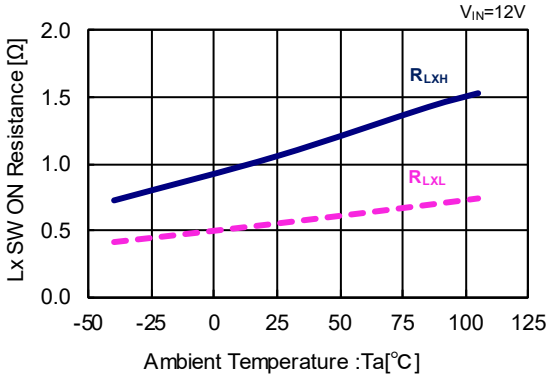


(9) Quiescent Current vs. Ambient Temperature

XDL605

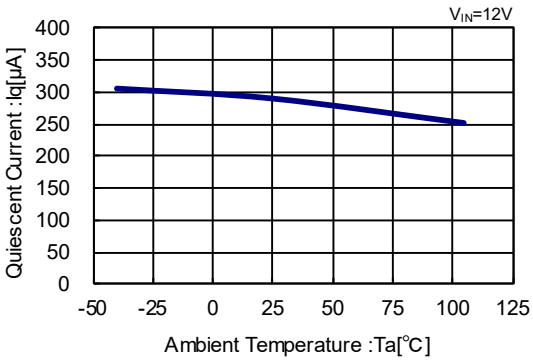


XDL606

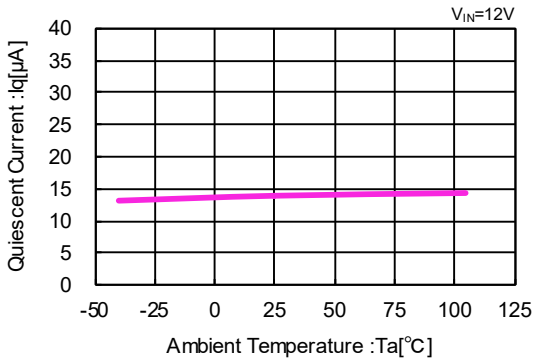

## ■TYPICAL PERFORMANCE CHARACTERISTICS (Continued)

(10) Internal Soft-Start Time vs. Ambient

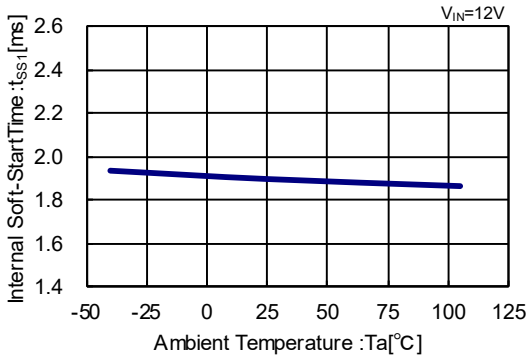


(11) External Soft-Start Time vs. Ambient

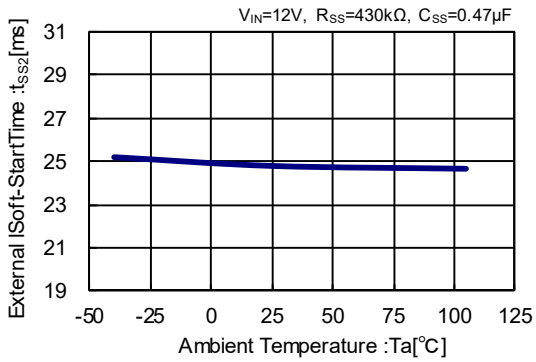


(12) PG Detect Voltage vs. Ambient Temperature

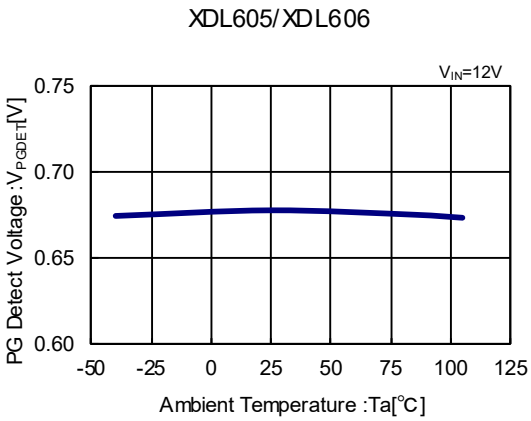


(13) PG Output Voltage vs. Ambient Temperature

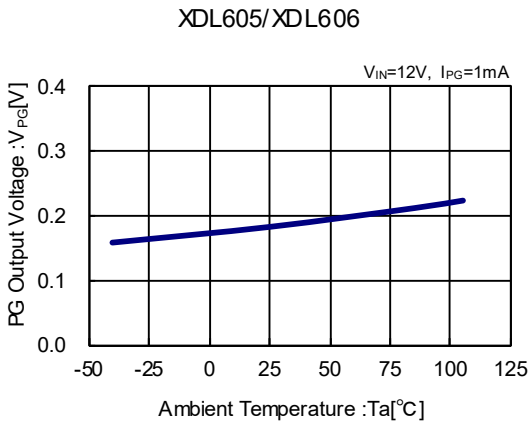


(14) EN/SS Voltage vs. Ambient Temperature

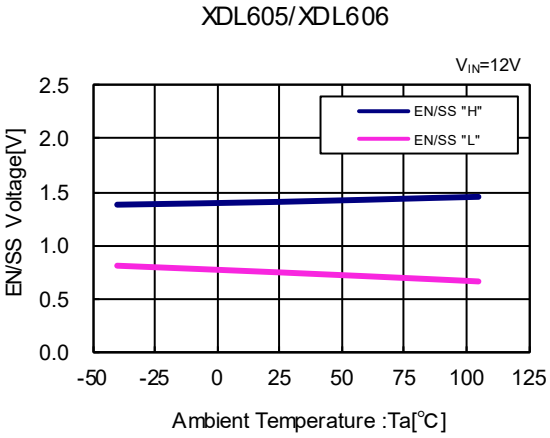

# ■TYPICAL PERFORMANCE CHARACTERISTICS (Continued)

(15) VIN-VOUT Operation Area

XDL605

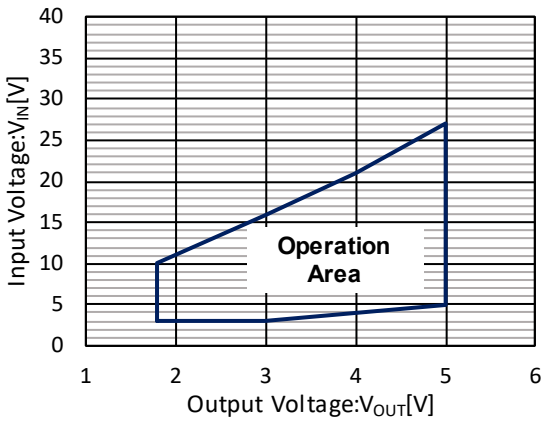


XDL606

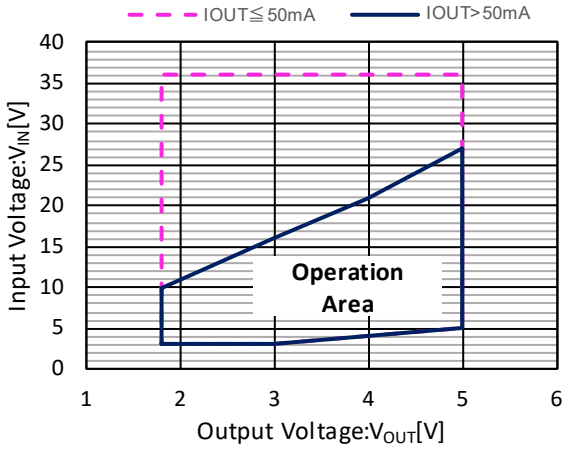


(16) Output Current Operation Area

XDL605/XDL606

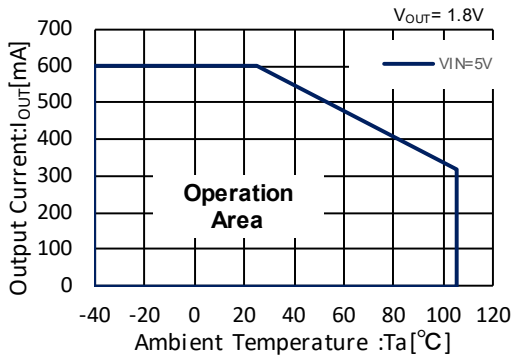


XDL605/XDL606

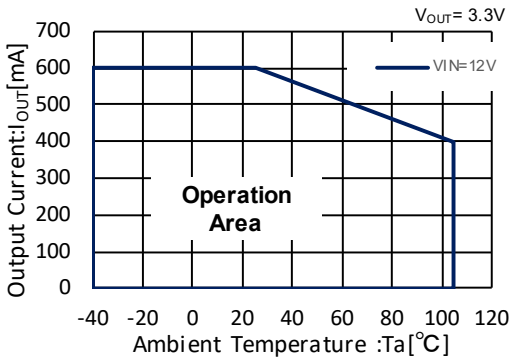


XDL605/XDL606

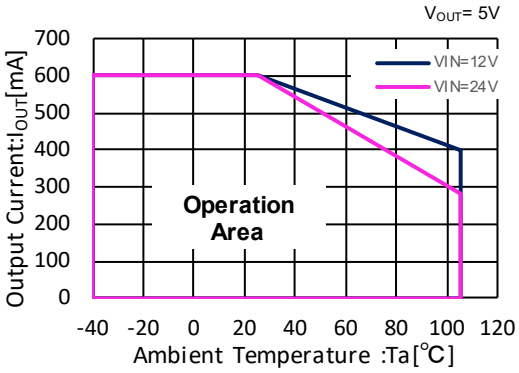

## ■TYPICAL PERFORMANCE CHARACTERISTICS (Continued)

(17) Load Transient Response

XDL605

$V_{IN}$=12V, $V_{OUT}$=3.3V, $I_{OUT}$=10mA→300mA,tr=tf=5us

$C_{IN}$=2.2μF×2(CGA4J3X7R1H225K125AB)
$C_L$=10μF×2 (CGA5L1X7R1C106K160AC)

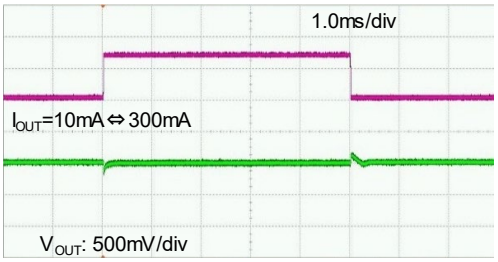


XDL606

$V_{IN}$=12V, $V_{OUT}$=3.3V, $I_{OUT}$=10mA→300mA,tr=tf=5us

$C_{IN}$=2.2μF×2(CGA4J3X7R1H225K125AB)
$C_L$=10μF×2 (CGA5L1X7R1C106K160AC)

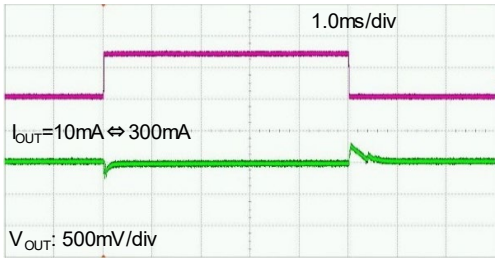


XDL605

$V_{IN}$=12V, $V_{OUT}$=5.0V, $I_{OUT}$=10mA→300mA,tr=tf=5us

CIN=2.2μF×2(CGA4J3X7R1H225K125AB)
CL=10μF×2 (CGA5L1X7R1C106K160AC)

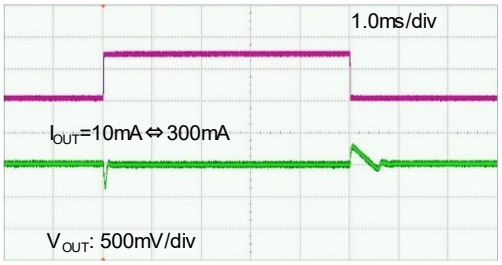


XDL606

$V_{IN}$=12V, $V_{OUT}$=5.0V, $I_{OUT}$=10mA→300mA,tr=tf=5us

CIN=2.2μF×2(CGA4J3X7R1H225K125AB)
CL=10μF×2 (CGA5L1X7R1C106K160AC)

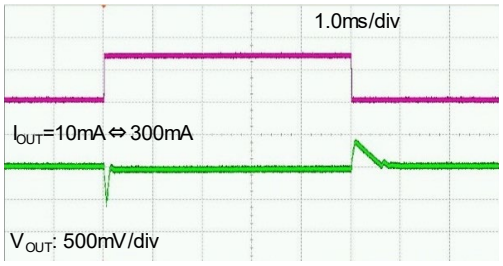


XDL605

$V_{IN}$=24V, $V_{OUT}$=5.0V, $I_{OUT}$=10mA→300mA,tr=tf=5us

CIN=2.2μF×2(CGA4J3X7R1H225K125AB)
CL=10μF×2 (CGA5L1X7R1C106K160AC)

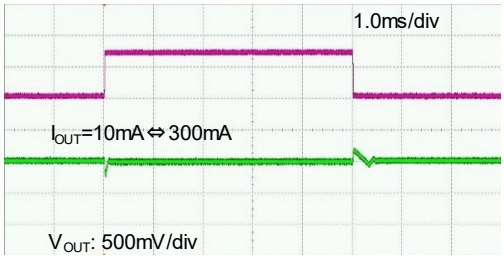


XDL606

$V_{IN}$=24V, $V_{OUT}$=5.0V, $I_{OUT}$=10mA→300mA,tr=tf=5us

CIN=2.2μF×2(CGA4J3X7R1H225K125AB)
CL=10μF×2 (CGA5L1X7R1C106K160AC)

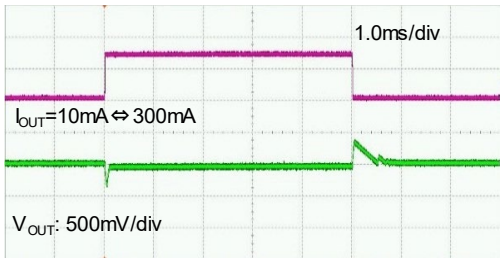

# ■TYPICAL PERFORMANCE CHARACTERISTICS (Continued)

(18) Input Transient Response

XDL605/XDL606

$V_{IN}$=8V→16V, $V_{OUT}$=5.0V, $I_{OUT}$=300mA,tr=tf=100us

XDL606B75D82-Q
CIN=2.2μF×2(CGA4J3X7R1H225K125AB)
CL=10μF×2 (CGA5L1X7R1C106K160AC)

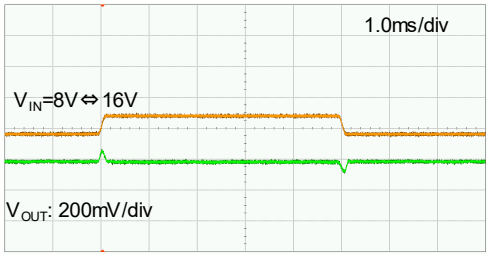


XDL605/XDL606

$V_{IN}$=16V→32V, $V_{OUT}$=5.0V, $I_{OUT}$=300mA,tr=tf=100us

XDL606B75D82-Q
CIN=2.2μF×2(CGA4J3X7R1H225K125AB)
CL=10μF×2 (CGA5L1X7R1C106K160AC)

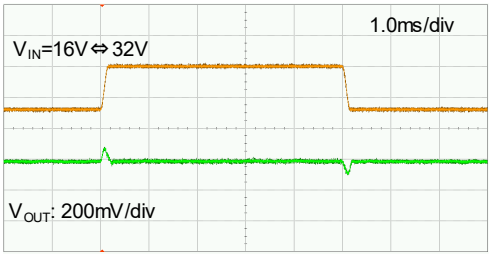


XDL605/XDL606

$V_{IN}$=8V→16V, $V_{OUT}$=3.3V, $I_{OUT}$=300mA,tr=tf=100us

XDL606B75D82-Q
$C_{IN}$=2.2μF×2(CGA4J3X7R1H225K125AB)
$C_L$=10μF×2 (CGA5L1X7R1C106K160AC)

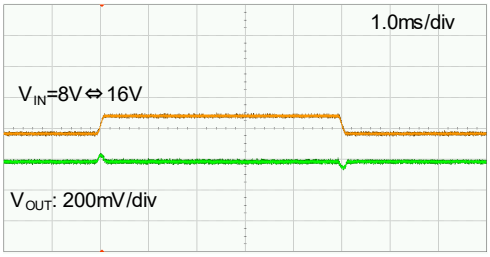


(19) EN/SS Rising Response

XDL605/XDL606

$V_{IN}$=12V, $V_{ENSS}$=0V→12V, $V_{OUT}$=5V, $I_{OUT}$=300mA

XDL606B75D82-Q
CIN=2.2μF×2(CGA4J3X7R1H225K125AB)
CL=10μF×2 (CGA5L1X7R1C106K160AC)

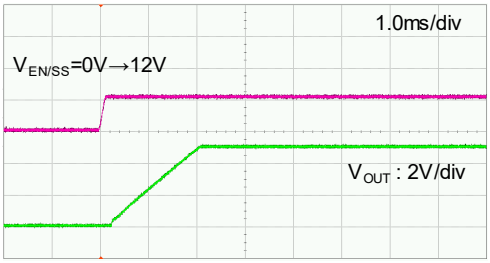


XDL605/XDL606

$V_{IN}$=24V, $V_{ENSS}$=0V→24V, $V_{OUT}$=5V, $I_{OUT}$=300mA

XDL606B75D82-Q
CIN=2.2μF×2(CGA4J3X7R1H225K125AB)
CL=10μF×2 (CGA5L1X7R1C106K160AC)

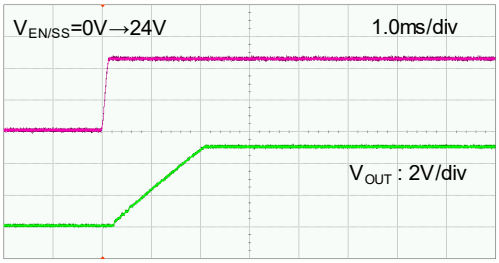

## ■TYPICAL PERFORMANCE CHARACTERISTICS (Continued)

(19) EN/SS Rising Response

XDL605/XDL606

$V_{IN}$=12V, $V_{ENSS}$=0V→12V, $V_{OUT}$=3.3V, $I_{OUT}$=300mA

XDL606B75D82-Q

$C_{IN}$=2.2μF×2(CGA4J3X7R1H225K125AB)

$C_L$=10μF×2 (CGA5L1X7R1C106K160AC)

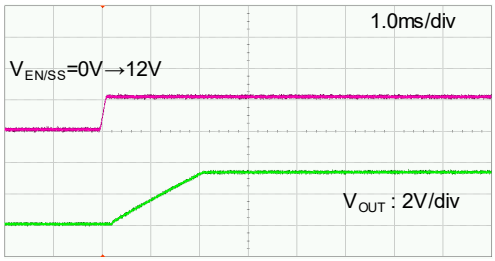


(20) VIN Rising Response

XDL605/XDL606

$V_{IN}$=0V→12V, $V_{ENSS}$=0V→12V, $V_{OUT}$=5V, $I_{OUT}$=300mA

XDL606B75D82-Q

CIN=2.2μF×2(CGA4J3X7R1H225K125AB)

CL=10μF×2 (CGA5L1X7R1C106K160AC)

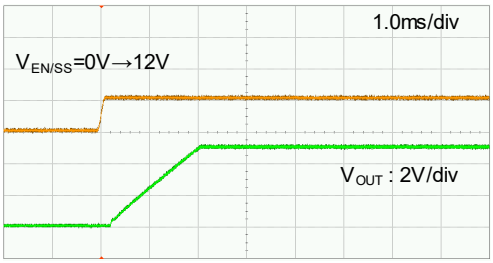


XDL605/XDL606

$V_{IN}$=0V→24V, $V_{ENSS}$=0V→24V, $V_{OUT}$=5V, $I_{OUT}$=300mA

XDL606B75D82-Q

CIN=2.2μF×2(CGA4J3X7R1H225K125AB)

CL=10μF×2 (CGA5L1X7R1C106K160AC)

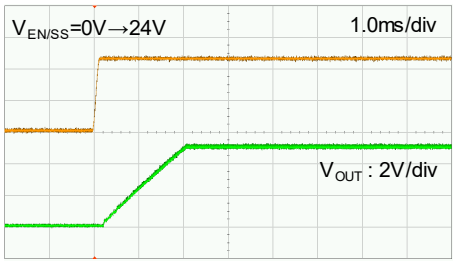


XDL605/XDL606

$V_{IN}$=0V→12V, $V_{ENSS}$=0V→12V, $V_{OUT}$=3.3V, $I_{OUT}$=300mA

XDL606B75D82-Q

$C_{IN}$=2.2μF×2(CGA4J3X7R1H225K125AB)

$C_L$=10μF×2 (CGA5L1X7R1C106K160AC)

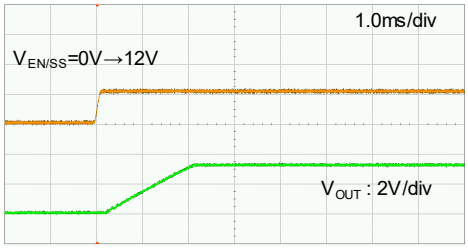

## ■PACKAGING INFORMATION

For the latest package information go to, www.torexsemi.com/technical-support/packages

| PACKAGE | OUTLINE / LAND PATTERN | THERMAL CHARACTERISTICS | |
|---|---|---|---|
| DFN3625-11B | DFN3625-11B PKG | JESD51-7 Board | DFN3625-11B Power Dissipation |

## ■MARKING RULE

●DFN3625-11B

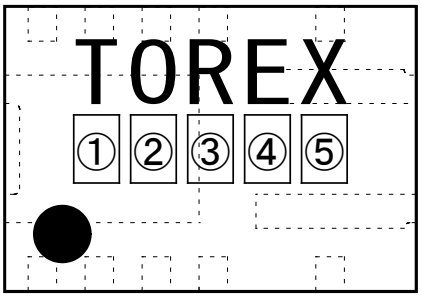


①represents product series

| MARK | PRODUCT SERIES |
|---|---|
| E | XDL605****82-Q |
| F | XDL606****82-Q |

②represents Type

| MARK | Type | PRODUCT SERIES |
|---|---|---|
| B | B | XDL60*B**82-Q |

③represents FB Voltage

| MARK | FB(V) | PRODUCT SERIES |
|---|---|---|
| 0 | 0.75 | XDL60**75*82-Q |

④,⑤represents production lot number 01～09、0A～0Z、11～9Z、A1～A9、AA～AZ、B1～ZZ in order
(G, I, J, O, Q, W excluded*)No Character inversion used

1. The product and product specifications contained herein are subject to change without notice to improve performance characteristics. Consult us, or our representatives before use, to confirm that the information in this datasheet is up to date.
2. The information in this datasheet is intended to illustrate the operation and characteristics of our products. We neither make warranties or representations with respect to the accuracy or completeness of the information contained in this datasheet nor grant any license to any intellectual property rights of ours or any third party concerning with the information in this datasheet.

3. Applicable export control laws and regulations should be complied and the procedures required by such laws and regulations should also be followed, when the product or any information contained in this datasheet is exported.

4. The product is neither intended nor warranted for use in equipment of systems which require extremely high levels of quality and/or reliability and/or a malfunction or failure which may cause loss of human life, bodily injury, serious property damage including but not limited to devices or equipment used in 1) nuclear facilities, 2) aerospace industry, 3) medical facilities, 4) automobile industry and other transportation industry and 5) safety devices and safety equipment to control combustions and explosions, excluding when specified for in-vehicle use or other uses.

   Do not use the product for in-vehicle use or other uses unless agreed by us in writing in advance.

5. Although we make continuous efforts to improve the quality and reliability of our products; nevertheless Semiconductors are likely to fail with a certain probability. So in order to prevent personal injury and/or property damage resulting from such failure, customers are required to incorporate adequate safety measures in their designs, such as system fail safes, redundancy and fire prevention features.

6. Our products are not designed to be Radiation-resistant.

7. Please use the product listed in this datasheet within the specified ranges.

8. We assume no responsibility for damage or loss due to abnormal use.

9. All rights reserved. No part of this datasheet may be copied or reproduced unless agreed by Torex Semiconductor Ltd in writing in advance.

TOREX SEMICONDUCTOR LTD.