Photoelectrics
Type EF 1801
Fiber Optic Sensor

CARLO GAVAZZI

- **Range: Fiber dependent, typ. 100 mm**
- **Adjustable sensitivity**
- **Modulated, red light**
- **Rated operational voltage: 10 to 40 VDC**
- **Output: DC 200 mA NPN or PNP**
- **Make and break switching function, LED indication**
- **Heavy duty M18 metal housing, IP 67**
- **Cable and plug versions**
- **For 2.2 mm fiber cable with 1 mm core**
- **MB 18 A for DIN-rail mounting (see Accessories)**

Product Description

Used in through-beam, retro-reflective or diffuse-reflective applications depending upon how the additional fibers are mounted. Easily adjustable sensitivity with 270° potentiometer. LED indication for output ON. Short M18 metal housing for heavy duty applications. The fiber allows positioning and mounting in tight spaces with the photoelectric sensor itself mounted in a more convenient location.

Ordering Key

EF 18 01 PPA S - 1

- **Type**
- **Housing diameter**
- **Range**
- **Output type**
- **Housing material**
- **Connection type**

Type Selection

Housing diameter	Rated operating dist. (S_n)	Ordering no. NPN/cable Make & break swit.	Ordering no. NPN/plug Make & break swit.	Ordering no. PNP/cable Make & break swit.	Ordering no. PNP/plug Make & break swit.
M18	Fiber depend.	**EF 1801 NPAS**	**EF 1801 NPAS-1**	**EF 1801 PPAS**	**EF 1801 PPAS-1**

Specifications

Rated operating dist. (S_n)	Fiber dependent
Temperature drift	0.4%/K
Hysteresis (H) (Differential travel)	3 to 20%
Rated operational volt. (U_B)	10 to 40 VDC (ripple included)
Ripple (U_{rpp})	≤10%
Output current Continuous (I_e) Short-time (I)	 ≤ 200 mA 200 mA, max. load capacity 100 nF
No load supply current (I_O)	≤ 20 mA,
Min. load current (I_m)	0.5 mA
OFF-state current (I_r)	≤ 100 µA
Voltage drop (U_d)	≤ 2.5 V
Protection	Reverse polarity, short circuit, transients
Transient voltage	Max. 1 kV/0.5 J
Sensitivity	Adjustable, 270° turn potentiometer,
Light source	660 nm
Light type	Red, modulated, synchronized

Operating frequency (f)	120 Hz, light/dark ratio 1:2
Response time OFF-ON (t_{ON}) ON-OFF (t_{OFF})	 ≤ 3.2 ms ≤ 5 ms
Power ON delay (t_V)	Typ. 100 ms
Indication Output ON	 LED, yellow
Environment Overvoltage category Pollution degree Degree of protection	 III (IEC 60664/664A; 60947-1) 3 (IEC 60664/664A; 60947-1) IP 67 (IEC 60529; 60947-1)
Temperature Operating Storage	 -20° to +60°C (-4° to 140°F) -30° to + 70°C (-22° to 158°F)
Vibration	10 to 150 Hz, 0.5 mm/7.5 g (IEC 60068-2-6)
Shock	2 x 1 m & 100 x 0.5 m (IEC 60068-2-32)
Dielectric voltage	500 VAC (rms)
Housing material Body Front Cable end Nuts	 Nickel-plated brass TPE/POM, black Polyester, black Nickel-plated brass

CARLO GAVAZZI

Specifications (cont.)

Connection	
Cable	Grey, 2 m, oilproof PVC, 4 x 0.35 mm² **Note:** Other cable lengths on request
Plug (-1)	M12
Cables for plug (-1)	CONH1A-. serie
Weight	
Cable version	115 g
Plug version	40 g
CE-marking	Yes

Dimensions

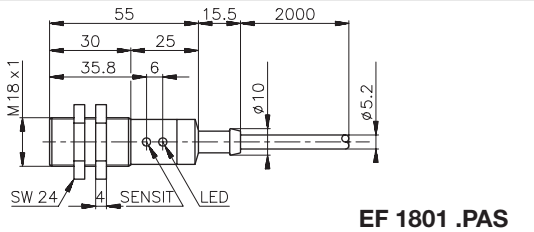

EF 1801 .PAS

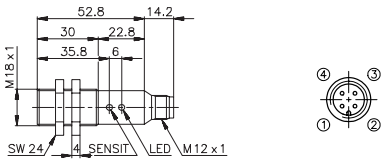

EF 1801 .PAS-1

Operation Diagram

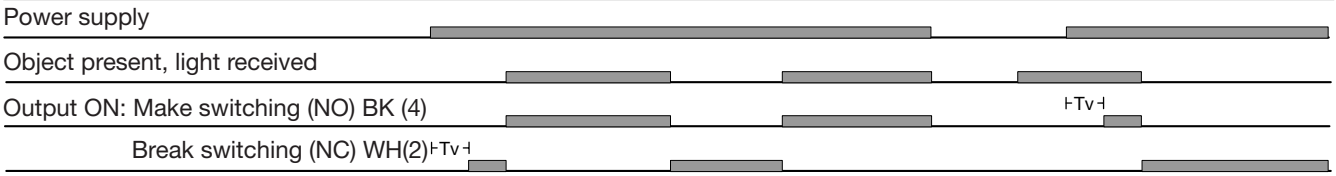

Truth Table

	Make switching		Break switching	
Object present	No	Yes	No	Yes
DC types				
LED	OFF	ON	OFF	ON
Load	Non-active	Active	Active	Non-active
Output NPN	High	Low	Low	High
Output PNP	Low	High	High	Low

Wiring Diagrams

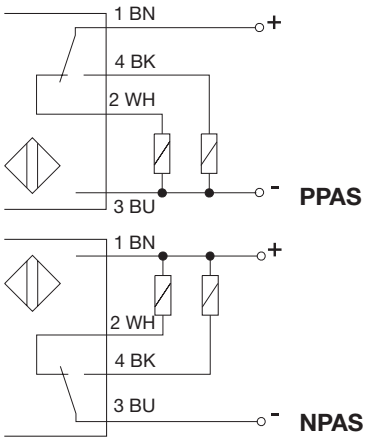

Accessories

- Fiber optics - call for further information
- Connector type CON.1A../CON.14NF.. series

Please refer to "Accessories"

Delivery Contents

- Photoelectric switch: EF 1801....
- 2 nuts
- M18 mounting bracket MB 18A for direct surface or DIN-rail mounting
- Screw driver
- Fiber cutter
- **Packaging:** cardboard box

Specifications are subject to change without notice (06.03.2006)

CARLO GAVAZZI

Installation Hints

When you insert the fibers:

- Push the spring-loaded clamp (1) with the enclosed screw driver towards the fiber entries (2). The fiber entries are now open for putting in the fibers.
- Put in the fibers. Be sure that the fibers pass the constriction near the bottom of the hole. The constriction seals the junction (between fiber and photo element) against dust.

The sensing distance will be reduced if there is an air gap between the fiber and the photo element.

- Release the clamp to fix the fibers.

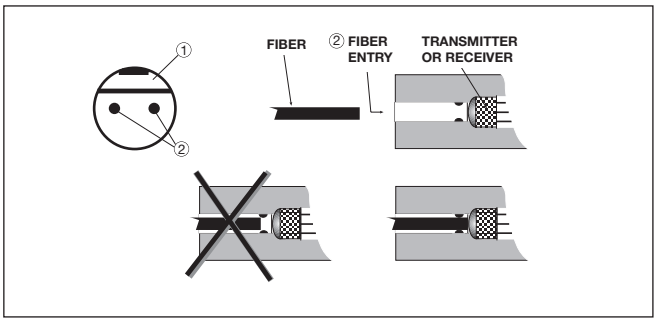

Installation Hints

To avoid interference from inductive voltage/ current peaks, separate the prox. switch power cables from any other power cables, e.g. motor, contactor or solenoid cables

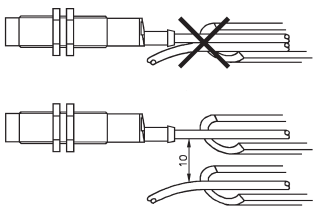

Relief of cable strain

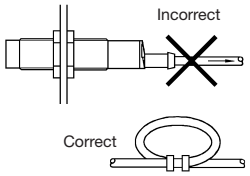

The cable should not be pulled

Protection of the sensing face

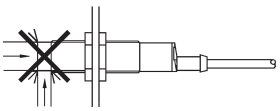

A proximity switch should not serve as mechanical stop

Switch mounted on mobile carrier

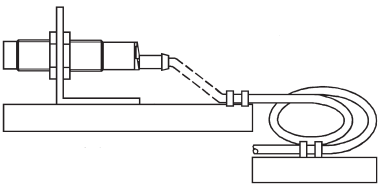

Any repetitive flexing of the cable should be avoided